Refrigerant R410A
INVERTER

SERVICE MANUAL

AIRSTAGE™ VR-IV

Variable Refrigerant Flow System

Simultaneous cooling & heating operation with

Heat Recovery System

FUJITSU GENERAL LIMITED

CONTENTS

1. TEST RUN

1-1 EXECUTION PROCEDURE AND EXECUTION PRECAUTIONS 01-01
1-2 CHECK ITEMS BEFORE POWER ON 01-03
1-2-1 Power source Inspection 01-03
1-2-2 Outdoor unit field setting inspection 01-04
1-2-3 Indoor unit field setting inspection 01-04
1-2-4 RB unit field setting Inspection 01-05
1-2-5 Transmission wire installation inspection 01-06
1-2-6 Piping installation inspection 01-10
1-2-7 Refrigerant charge amount inspection 01-15
1-2-8 3-way valve opening inspection 01-15
1-3 CHECK ITEMS AFTER POWER ON 01-16
1-3-1 Power source check 01-16
1-3-2 Error indication check 01-16
1-3-3 Installed unit and their addresses check 01-17
1-3-4 Transmission line connection check 01-18
1-3-5 Operation check sheet 01-19
1-4 TEST RUN OPERATION 01-20
1-4-1 Test Run From Outdoor unit PC Board 01-20
1-4-2 Test Run From Remote Controller 01-21
1-5 TEST RUN CONTROL 01-24
1-6 FIELD SETTING / FUNCTION SETTING FOR OUTOOR UNIT 01-25
1-7 FIELD SETTING / FUNCTION SETTING FOR INOOR UNIT 01-28
1-8 FIELD SETTING / FUNCTION SETTING FOR OUTDOOR AIR UNIT 01-29

2. OUTDOOR UNIT OPERATION CONTROL

2-1 REFRIGERANT CIRCUIT 02-01
2-2 INPUT / OUTPUT LIST 02-02
2-3 HEAT RECOVERY OPERATION CONTROL 02-03
2-3-1 Operation mode selection and controlling 02-03
2-4 COMPRESSOR OPERATION 02-03
2-4-1 Operation / Stop Condition 02-03
2-4-2 Compressor speed control 02-04
2-4-3 Capacity control 02-05
2-4-4 Compressor Sequence Operation 02-06
2-5 HEAT EXCHANGER CONTROL 02-07
2-5-1 Operation mode selection and controlling 02-07
2-5-2 Capacity control 02-07
2-6 FAN CONTROL 02-08
2-6-1 Cooling / Cooling main operation 02-08
2-6-2 Heating / Heating main operation 02-09
2-7 EXPANSION VALVE CONTROL 02-10
2-8 SPECIAL OPERATION 02-11
2-8-1 Oil Recovery Operation 02-11
2-8-2 Pre-Heat Operation 02-11
2-8-3 Defrost Operation Control 02-12
2-8-4 Low noise mode 02-14
2-8-5 Snow Falling Protection Fan Mode -Default Setting - 02-15

CONTENTS

2-9 PROTECTIVE FUNCTION 02-16
2-9-1 Discharge temperature protection 02-16
2-9-2 High pressure protection 02-18
2-9-3 Low pressure protection 02-20
2-9-4 Heatsink temperature protection 02-21
2-9-5 Compressor temperature protection 02-21
2-9-6 O.U Heat - Ex.1(2) Gas Temp. abnormal stop 02-21
2-9-7 Over current protection 02-22
2-9-8 Compressor Frequency Maximum setting protection 02-22
2-9-9 Compressor compress ratio protection 02-22
2-9-10 Fan Motor, Motor Driver abnormal stop protection 02-23
2-9-11 EEV Coil abnormal Stop 02-23

3. INDOOR UNIT AND RB UNIT OPERATION

3-1 FAN CONTROL 03-01
3-1-1 Fan Speed Setting 03-01
3-1-2 "AUTO" Position 03-01
3-2 MASTER CONTROL 03-02
3-2-1 Operation Mode Control 03-04
3-2-2 Auto Changeover Heating / Cooling Operation 03-06
3-2-3 Auto Changeover Cooling / Dry Operation 03-08
3-2-4 "COOL" Position 03-09
3-2-5 "HEAT" Position 03-09
3-3 LOUVER CONTROL 03-11
3-4 ELECTRONIC EXPANSION VALVE CONTROL 03-14
3-5 DRAIN PUMP OPERATION 03-14
3-6 FUNCTION 03-16
3-6-1 Auto Restart 03-16
3-6-2 Freeze Prevention Control 03-16
3-6-3 Oil Recovery Operation / Defrost Operation 03-16
3-6-4 Outdoor temperature protected operation for Outdoor air unit 03-17
3-7 RB UNIT COMPONENT 03-18
3-7-1 Position of Solenoid coil 03-18
3-7-2 Position of Solenoid valve 03-19
3-7-3 PCBs layout 03-20
3-7-4 PCB component 03-21
3-7-5 Solenoid Valve controlling 03-22
3-7-6 Refrigerant Flow 03-23
3-8 DX-KIT 03-24
3-8-1 System configuration 03-24
3-8-2,3 Fundamental functions 03-25
3-8-4 Electrical expansion valve control for DX-KIT 03-27
3-8-5 Drain pump operation for DX-KIT 03-27
3-8-6 Function 03-28

CONTENTS

4. TROUBLE SHOOTING

4-1 NORMAL OPERATION 04-01
4-1-1 Indoor Unit Display 04-01
4-1-2 Outdoor Unit Display 04-02
4-2 ABNORMAL OPERATION 04-03
4-2-1 Error code Display 04-03
4-2-2 Indoor Unit Display 04-04
4-2-3 Outdoor Unit Display 04-04
4-2-4 Remote Controller Display 04-05
4-2-5 Trouble shooting index - Error code List - 04-06
4-2-6 Trouble shooting index - No Error code - 04-07
4-2-7 Trouble level of system 04-08
4-2-8 Error History mode 04-09
4-2-9 Trouble shooting with Error code 04-10
4-2-10 Trouble shooting No Error code 04-81
4-3 SERVICE INFORMATION -Network communication abnormal - - RB unit Abnormal - 04-108
4-4 SERVICE INFORMATION 04-111
4-4-1 Back up operation 04-111
4-4-2 Work procedure after the backup operation 04-113
4-5 SERVICE PARTS INFORMATION 04-115

5. APPENDING DATA

5-1 REFRIGERANT CIRCUIT 05-01
5-2 WIRING DIAGRAM 05-07
5-2-1 Indoor Unit 05-07
5-2-2 Outdoor Unit 05-28
5-2-3 RB Unit 05-30
5-2-4 Outdoor Air Unit 05-35
5-2-5 DX-KIT 05-37
5-3 SATURATION TABLE (R410A) 05-39
5-3-1 Saturation temperature and saturation pressure tables (R410A) 05-39
5-3-2 Temperature and pressure of refrigerant (Graph) 05-30

6. DISASSEMBLY PROCESS

Refrigerant R410A INVERTER

AIRSTAGE™ VR-IV

Variable Refrigerant Flow System

1. TEST RUN

1. TEST RUN

1-1 EXECUTION PROCEDURE AND EXECUTION PRECAUTIONS

Before execution

	Execution procedure and precautions	Reason
Execution zone decision		
Confirmation of refrigerant used	① Check the characteristics of the refrigerant used and grasp the special features of the refrigerant. If refrigerant must be charged, always charge the refrigerant specified for the product. ② Confirm the product design pressure. R410A 4.12MPa	• Use of a refrigerant other than the specified refrigerant will invite equipment trouble.
Preparation of execution drawings		
Confirmation of installation site		
Preparations before execution	① Use new refrigerant piping of the thickness specified by the D&T manual. ② Since R410A dedicated tools are necessary, prepare them in advance. ③ Absolutely avoid use of existing piping. If use of existing piping is unavoidable, the piping must be cleaned.	• Secure the necessary pressure resistance.

Execution

Sleeve and insert work		
Indoor unit installation	Always use a level and keep the indoor unit level. If the equipment is tilted toward the drain port, install it so that the tilt is within 10mm. Excessive tilt will cause water leakage.	• Prevention of water leakage
Refrigerant piping work	When performing piping work, observe the following items so that the inside of the piping is clean and air tight. ① Use pipe that is not dirty inside. ② When the pipe is left standing, protect it. ③ Finish flaring exactly. ④ Confirm the width across flats dimension and shape of flare nuts. ⑤ Always blow nitrogen while brazing. ⑥ Perform flushing before connecting the equipment.	• Foreign matter, water, etc. in the piping will cause faulty cooling and compressor trouble. • Refrigerant leakage will cause low performance and abnormal stopping.
Drain piping work	① Always make the downward slope of the drain pipe 1/100 or greater and make the horizontal length within 20m. ② Use hard polyvinylchloride pipe as the drain pipe. ③ Support the drain pipe between 1.5 to 2.0m. ④ Use pipe of 1 rank up (VP30 or greater) as central piping.	• Prevention of water leakage
Duct work		
Heat insulation work	Select the size of the heat insulating material according to the ambient temperature and relative humidity of the refrigerant. Use a heat insulating material having a heat conductivity of 0.043W/(m·k) or less.	• Prevention of water leakage
Electrical work		
Foundation work for products		
Products installation work *Refer to warning or caution in the attached installation manual of each products	When making flare connections always use a torque wrench and tighten the flare nut positively to the specified torque.	• Refrigerant leakage will cause low performance and abnormal stopping.
Refrigerant piping connection work	Pressurize the product with nitrogen gas up to the design pressure and conduct a 24Hr air tightness test.	• Refrigerant leakage will cause low performance and abnormal stopping.
Air tightness test	① Install a vacuum pump with reverse flow check mechanism or a reverse flow check adaptor to a conventional vacuum pump and use. ② Pump down sufficiently. Approximately 1 hour or longer after -0.10MPa reached. Allow to stand for approximately 1 hour after stopping the vacuum pump and confirm that the needle does not return. ③ Air purging using refrigerant is strictly prohibited.	• Mixing in of vacuum pump oil by reverse flow will cause equipment trouble. • Prevents degradation of the oil by completely removing water and air. *recommend the vacuuming mode
Vacuum drying		

* Vacuuming mode

This function is used for vacuuming the indoor unit and the connection piping.
Note: For starting Vacuuming mode, the refrigerant address setting has to be finished.

When the [vacuuming mode] is set, <Push switch setting, F3:21>
EEV of connected all indoor units opens.
So, the vacuuming indoor unit and piping becomes easier.

When the vacuuming ends, please turn off the power supply for all of the indoor units, RB units and outdoor unit, [vacuuming mode] is released.

Execution

Addition refrigerant charging

① Confirm the additional refrigerant amount with the installation manual, etc. ② Always take the R410A refrigerant from the cylinder liquid phase and charge it using the gas phase. (Do not lay a cylinder with siphon pipe on its side.) ③ Use an R410A dedicated gauge manifold and charging hose.	・If taken from the air phase, since the composition of the refrigerant which is charged will change, low performance and abnormal stop will occur easily. ・Prevent erroneous sealing in of refrigerant.

Gas leak test

Use an R410A dedicated leak tester to check for gas leaks.	・A leak tester for other than R410A cannot detect leaks.

Pre-commisioning "Before Power ON"

① Power source installation inspection ② Field setting and setting inspection ③ Transmission wire installation inspection ④ Piping installation inspection	・Before starting the installed system, the final inspection is necessary. When you find out any incorrect installation or wrong setting, revise it before starting the system

Pre-commisioning "After Power ON"

① Connect Service Tool ② Power source inspection ③ Error indication inspection ④ Transmission wire connection inspection Other Field setting with power ON state, and adjustment	・When you see any abnormal things, turn OFF the power supply first, and revise it with power OFF state.

In case of "Auto Address setting"

Note : Perform the auto address setting of Signal amp. at first, and the next perform the auto-address setting of indoor unit.
When you perform the autoaddress setting for RB unit, the indoor unit address setting needs to be done at first.

Test run & adjustment

Check operating condition by using service tool. For the judgment of operating condition, refer to the operation check sheet.	When you see any abnormal things, stop the system, and revise it with power OFF state.

Handover & explanation of operation

1-2 Check Items Before Power ON

1-2-1 Power source Inspection sheet

Check Item		Check contents	Judgement	Present Status
Ref. circuit name: _____				
Power Source	Outdoor Unit	Power supply	3 ϕ / 4W / (380 - 415) / 50Hz	☐ Yes / ☐ No
		Circuit Breaker Size (A)	・For AJ*072G : 20A ・For AJ*090G / 108G : 25A ・For AJ*126G / 144G : 40A	Master (AJ* _____G):_____(A) Slave-1(AJ* _____G):_____(A) Slave-2(AJ* _____G):_____(A)
			Leakage current : 100mA, 0.1 sec or less	☐Yes / ☐No
		Power Line Wire Size (mm^2)	Check the breaker capacity vs. wire size 20A=4mm^2, 25A=6mm^2, 40A=10mm^2, 60A=16mm^2, 80A=22mm^2, 100A=38mm^2 * Japanese Standard	Master: _____ (mm^2) Slave-1: _____ (mm^2) Slave-2: _____ (mm^2)
		Power line Wiring Note: One Outdoor Unit must have one individual Circuit Breaker	Example : 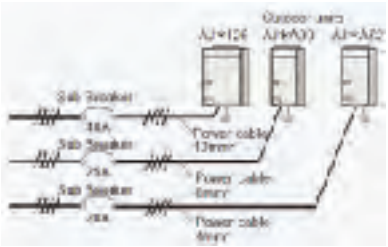	☐Complied ☐ Not complied

* Note: Regulation of wire size and circuit breaker differs from each locality, please refers in accordance with local rule

Check Item		Check contents	Judgement	Present Status
Ref. circuit name: _____				
Power Source	Indoor Unit & RB Unit	Power supply	1ϕ / (198-264V) / 50Hz	☐ Yes / ☐ No
		Circuit Breaker Size (A) (Check, Leakage current vs. number of IUs & RB units)	・20A breaker for one circuit ・Leakage current as follows: No. of units vs. leakage current: ・30mA for 12 nos. (IUs + RB units) ・100mA for 40 nos. (IUs + RB units) ・200mA for 81 nos. (IUs + RB units) ・300mA for 122 nos. (IUs + RB units) Note: MCA for total connected units (IU + RB) less than 15A for 20A breaker capacity MCA means, minimum circuit ampere	Circuit number -1 Breaker capacity: _____ (A) Nos. of Connected units: _____ (IU+RB) Circuit number -2 Breaker capacity: _____ (A) Nos. of connected units: _____ (IU+RB) Circuit number -3 Breaker capacity: _____ (A) Nos. of Connected units: _____ (IU+RB)
		Power line wire size (mm^2)	Wire size 2.5mm^2 (for 20A breaker)	_____ (mm^2)
		Power line wiring	Example for one circuit	☐ Complied ☐ Not complied

* Note: Regulation of wire size and circuit breaker differs from each locality, please refers in accordance with local rule

1-2-2 Outdoor unit field setting inspection sheet

Check Item		Check contents	Judgement		Present Status
No. of outdoor unit for one ref. circuit: _____, Ref. circuit name: _____					
Outdoor Unit	Outlook	Appearance	Shall be no deformation		☐OK / ☐NG
		Serial No.	Master: Slave -1: Slave -2:		
		Power source & transmission wiring	Connection points & loose screws check		☐OK / ☐NG
		Connection piping	Is it insulated properly without gap?		☐OK / ☐NG
		Outdoor air temperature	Checked & entered the value		(℃)
	Setting	・DIP-SW setting SET-3 SET-5	OU Address (SET 31 & SET 3 -2) Note: setting for Master & Slave units (Default : OFF - OFF)	Master (OFF - OFF)	☐Y / ☐N
				Slave1 (OFF - ON)	☐Y / ☐N
				Slave2 (ON - OFF)	☐Y / ☐N
			No. of Slave Unit (SET 3-3 & SET 3-4) Note: setting for Master unit only (Default : OFF- OFF)	NO Slave (OFF- OFF)	☐Y / ☐N
				1 x Slave (OFF- ON)	☐Y / ☐N
				2 x Slave (ON - OFF)	☐Y / ☐N
		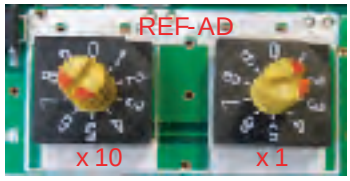 REF-AD x 10 x 1	No. of OU (SET 5 -1 & SET 5 -2) Note: setting for Master & Slave units (Default : OFF- OFF)	1 x OU (OFF - OFF)	☐Y / ☐N
				2 x OU (OFF - ON)	☐Y / ☐N
				3 x OU (ON - OFF)	☐Y / ☐N
			Terminal Register (SET 5 -4) Note : setting for Master units	OFF or ON (Default : OFF)	☐Y / ☐N
		・Rotary-SW setting	Ref. Add. (among Master & Slave units)	Ref ADx10 & Ref ADx1	☐Y / ☐N

1-2-3 Indoor unit field setting inspection sheet

Check contents														
Ref. circuit name: _____, Ref. address: ____ (00 ～ 99)														
Model Name & Serial No.	**Outlook**				**Function setting by DIP-SW (Off / On)**					**Add. Setting (by Rotary-SW)**				
	Access hole for maintenance (For Duct type & Cassette type units)	RC wiring connection points: (loose / deform)	Refrigerant pipes insulation	Drain pipes installation	Wired RC setting (DIP SW 1) 2 wire / 3 wire (default: 2 wire)	External Input (edge/pulse) SET 2-2 (default: OFF)	Wireless RC custom code SW 1 SET 3-1 (default: OFF)	Wireless RC custom code SW 2 SET 3-2 (default: OFF)	Drain Pump SW (for Slim duct) SET 4-1 (default: OFF)	Ref. Add. (REF AD x 10)	Ref. Add. (REF AD x 1)	IU Add. (IU AD x 10)	IU Add. (IU AD x 1)	RC Add. (RC AD)
	☐Y / ☐N	☐Y / ☐N	☐Y / ☐N	☐Y / ☐N	☐Y / ☐N	☐Y / ☐N	☐Y / ☐N	☐Y / ☐N	☐Y / ☐N					
	☐Y / ☐N	☐Y / ☐N	☐Y / ☐N	☐Y / ☐N	☐Y / ☐N	☐Y / ☐N	☐Y / ☐N	☐Y / ☐N	☐Y / ☐N					
	☐Y / ☐N	☐Y / ☐N	☐Y / ☐N	☐Y / ☐N	☐Y / ☐N	☐Y / ☐N	☐Y / ☐N	☐Y / ☐N	☐Y / ☐N					
	☐Y / ☐N	☐Y / ☐N	☐Y / ☐N	☐Y / ☐N	☐Y / ☐N	☐Y / ☐N	☐Y / ☐N	☐Y / ☐N	☐Y / ☐N					

1-2-4 RB unit field setting Inspection sheet

RB Unit	Check contents											
Ref. circuit name: _____, Ref. address :__(00～99)												
Model Name	Outlook			RB unit Add. set by Rotary-SW				Related Indoor Unit Address	No. of connected IU vs. total capacity			
									For single type RB unit		For multi type RB unit (single / series connection)	
	Transmission & Power line wiring connection terminal (Loose / Tilting)	Access hole for maintenance (Have / Not have)	Refrigerant piping insulation	Ref. Add. (REF AD x 10)	Ref. Add. (REF AD x 1)	RB Add. (IU AD x 10)	RB Add. (IU AD x 1)		Number of Connected IUs	Total capacity (kW) of the connected IUs	Number of Connected IUs	Total capacity (kW) of the connected IUs

RB unit (single type)	Indoor units / Branch	Total capacity
UTP- RX01AH	Maximum 7 units	8.0 kW or less
UTP- RX01BH	Maximum 8 units	18.0 kW or less
UTP- RX01CH		28.0 kW or less

RB unit (multi type)	Number of RB units	Indoor unit / Branch	Capacity	
			Each Branch	Total
UTP-RX04BH	1 unit	Maximum 8 units	Up to 18.0kW	Up to 56.0kW
	2 units series			
UTP-RX08AH	1 unit	Maximum 7 units	Up to 8.0kW*	Up to 72.0kW
UTP-RX12AH				Up to 95.0kW

*Duble : Up to 18.0kW
Fours : Up to 28.0kW

Single type RB unit
UTP-RX01AH
UTP-RX01BH
UTP-RX01CH

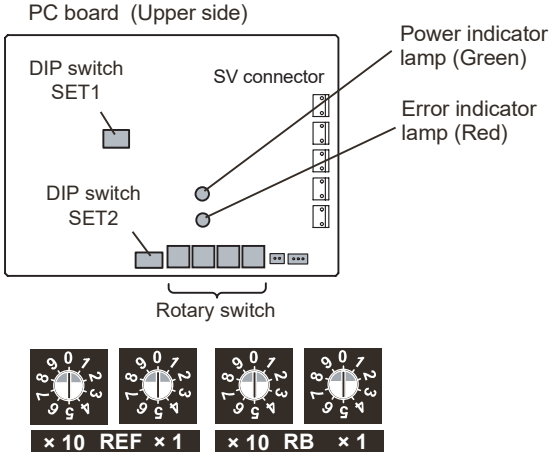

Multi type RB unit
UTP-RX04BH

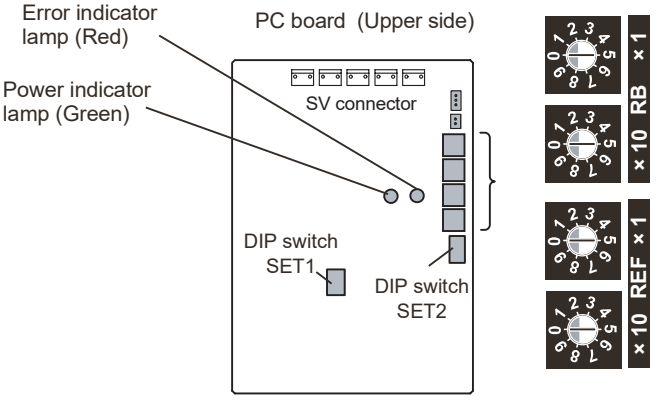

Multi type RB unit
UTP-RX08AH
UTP-RX12AH

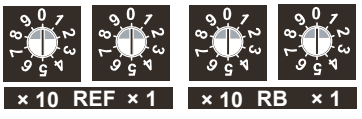

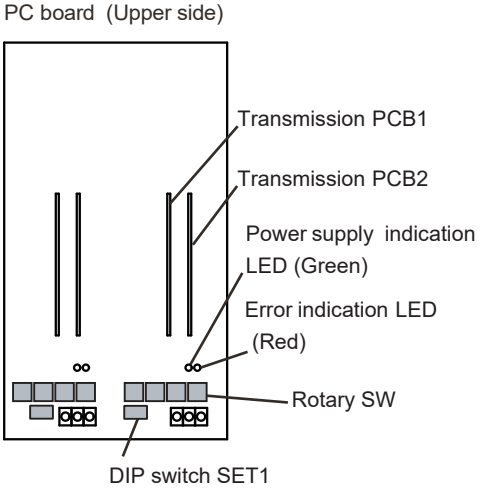

Setting of DIP switch S300 when branching
(This setting applies only to UTP-RX08AH and UTP-RX12AH.)

Note) Set the DIP switch s300 used for branching correctly.
Incorrect settings may cause symptoms such as “hard to cool, not cool”, “hard to warm, not warm”, and “noisy sound”.

When merging 2 branches

Set up the DIP switch S300 according to the table information.

- Only the types of branch combinations that are listed in the table can be merged. (For example, branches B and C cannot be merged with each other).

PC board	Branches that can be merged	DIP Switch S300 "CON-CURRENT OUTPUT"			Cable-connecting terminal block
		1 [4-3]	2 [3-2]	3 [2-1]	
For branches A-D	Branches A and B *1	OFF	OFF	ON	For branch B
	Branches C and D *2	ON	OFF	OFF	For branch D
	Branches A and B Branches C and D *3	ON	OFF	ON	For branch B
					For branch D
For branches E-H	Branches E and F *1	OFF	OFF	ON	For branch F
	Branches G and H *2	ON	OFF	OFF	For branch H
	Branches E and F Branches G and H *3	ON	OFF	ON	For branch F
					For branch H
For branches I-L	Branches I and J *1	OFF	OFF	ON	For branch J
	Branches K and L *2	ON	OFF	OFF	For branch L
	Branches I and J Branches K and L *3	ON	OFF	ON	For branch J
					For branch L

Example) To merge branches A and B or branches C and D

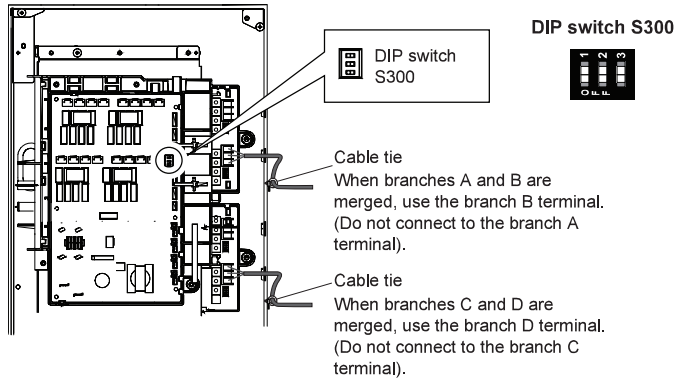

When merging 4 branches

Set up the DIP S300 according to the table information.

- Only the types of branch combinations that are listed in the table can be merged. (For example, branches B, C, D and E cannot be merged together).

PC board	Branches that can be merged	DIP Switch S300 "CON-CURRENT OUTPUT"			Cable-connecting terminal block
		1 [4-3]	2 [3-2]	3 [2-1]	
For branches A to D	Branches A to D	ON	ON	ON	For branch D
For branches E to H	Branches E to H	ON	ON	ON	For branch H
For branches I to L	Branches I to L	ON	ON	ON	For branch L

Example) To merge branches A, B, C and D together

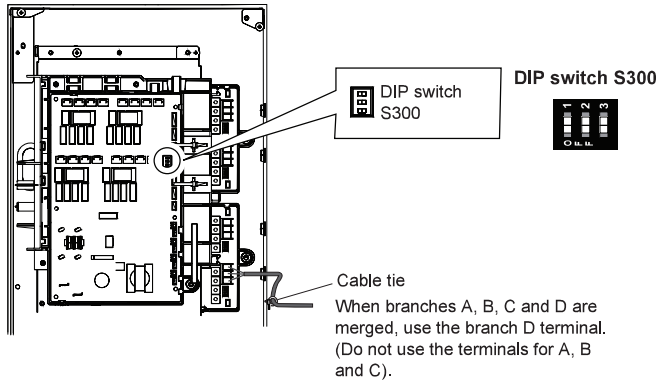

1-2-5 Transmission wire installation inspection sheet 1/3

Check Item		Check contents	Judgement	Present Status
Number of ref. circuit connected in the network system: _____, Ref. addresses: _____(00 - 99)				
VRF Network System	Transmission wire	Outlook	Is it LonWorks compatible?	☐Yes / ☐No
			Maker name?	
		Wire specification	0.33mm², shield wire	(mm²)
	Transmission line connection points	For cooling only IU Between RB unit & IU	Must be properly connected (Between RB unit & IU) RB unit 【Tterminal (OUT/U) : X1, X2,Earth】 IU 【Terminal (IN/U) : X1, X2, Earth】	☐Yes / ☐No
		For Heat Recovery IU Between RB unit & IU	Must be properly connected (Between RB unit & IU) RB unit 【Tterminal (IN/U) : X1, X2,Earth】 IU 【Terminal (IN/U) : X1, X2, Earth】	☐Yes / ☐No
		Between RB unit & Master OU	Must be properly connected (Between RB unit & Master OU) RB unit 【Terminal (OUT/U): X1, X2, Earth】 Master OU 【Terminal (RB/U) : X1, X2, Earth】	☐Yes / ☐No
		Between Master OUs	Must be properly connected (Between Master OUs) Master OUs 【Terminal: Z1 & Z2】	☐Yes / ☐No
		Between Master OU & Slave OU or In between Salve OUs	Must be properly connected (Between Master OU and Slave OU / Slave OU and Slave OU) 【Terminal: H1 & H2】	☐Yes / ☐No
		Shield wire connection	Both ends of shield wire must be grounded	☐Yes / ☐No
		Wiring connection	Wiring connection per terminal (≦2)	☐Yes / ☐No

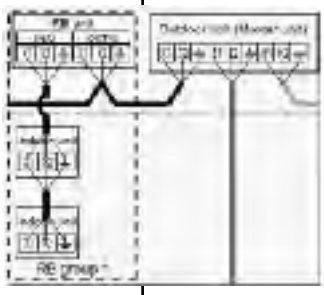

Check Item	Check contents	Judgement	Present Status
Number of ref. circuit connected in the network system: _____, Ref. addresses: _____(00 ～99)			
Transmission line Reference: From outdoor unit RB To indoor unit	Transmission line layout (Between RB unit & IU) Reference: (Piping Layout)	Correct Layout Not Correct Layout Example - 1 Not Correct Layout Example - 2 Not Correct Layout Example - 3	☐ Correct ☐ Not correct If not correct, pls. rectify the connection

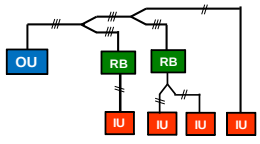

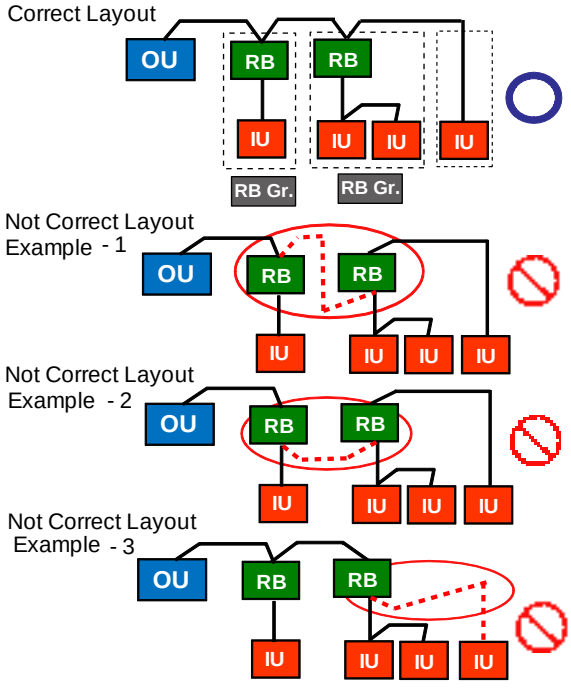

1-2-5 Transmission wire installation inspection sheet 2/3

Check Item	Check contents	Judgement	Present Status
Number of ref. circuit connected in the network system: _____, Ref. addresses: _____(00 ～99)			
Transmission line Reference: From outdoor unit RB To indoor unit	Transmission line layout (Between RB unit & IU) Reference: (Piping Layout) 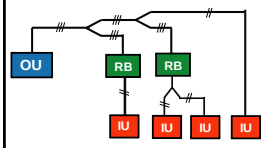	Correct Layout 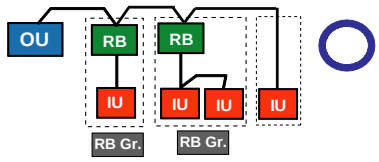 Not Correct Layout Example - 1 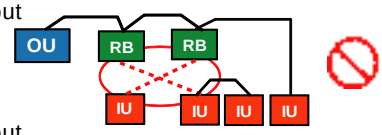 Not Correct Layout Example - 2 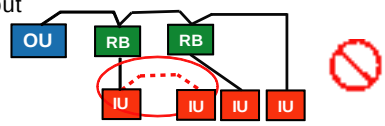 Not Correct Layout Example - 3 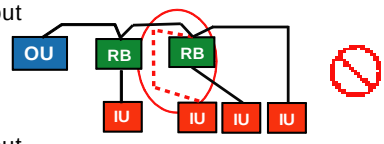 Not Correct Layout Example - 4 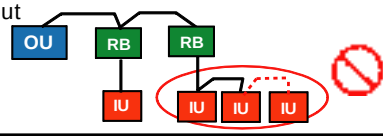	☐ Correct ☐ Not correct If not correct, pls. rectify the connection

Check Item		Check contents	Judgement	Present Status
Number of ref. circuit connected in the network system: _____, Ref. addresses:_____(00 ～ 99)				
VRF Network System	Network wiring	Total transmission line length	Wiring length ≦ 3600m (Value taken from Network Design Drawing)	(m)
		Network wiring layout	Do not make a loop configuration	☐ Looped / ☐ Not looped
		No. of network segment (*1)	No. of network segment ≦ 41	

(*1) Create one Network Segment based on the following conditions,

Condition -1: if the transmission line length ≦ 500m

Condition -2: if a total number of connected units ≦ 64 connected units (*2)

(*2) connected units mean a total of (Indoor Units + Master Outdoor Units + RB Units (*3) + TPC Units + System Controller Units Network Convertor for LonWorks Unit + Central RC Units + Network Convertor Units + BACnet Gateway Unit + Signal Amplifier Units + Service Tool Unit + Web Monitoring Tool Unit)

(*3) for single type RB Unit, count as '0', for multiple type RB Unit, when all ports are connected with Indoor Unit, count as '0'. However, if one of the port of the multiple type RB Unit is not connected with Indoor Unit, at that time count as one RB Unit.

1-2-5 Transmission wire installation inspection sheet 3/3

Check Item		Check contents	Judgement		Present Status
Number of ref. circuit connected in the network system : _____, Ref. addresses :_____ _____(00 ～99)					
VRF Network System	Network Configuration	No. of IUs & OUs	For one VRF Network System (IU ≦400 & OU ≦100)		IU number : _____ OU number: _____
		No. of System Controller	One System Controller per VRF Network System		
		No. of Touch panel controller (TPC)	Connectable Nos. 16	Total 16 Nos. Per VRF Network System (including one Network Converter for LonWorks)	TPC: _____
		No. of Central RC (CRC)	Connectable Nos. 16		CRC: _____
		No. of Network Convert for Group RC	Connectable Nos. 64		Group RC: _____
		No. of Signal Amplifier (SA) ≦40 Detail contents ・No. of SA (filter mode OFF) ≦8 ・No. of SA (filter mode ON) ≦32	・One per 500m transmission line length OR, ・One per 400m transmission line length between units OR, ・One per every 64 number of connected units OR, ・One per every master OU if total number of connected Indoor Units > 320		Number of Signal Amplifier :_____
		No. of Network Convertor (≦100)	One for each separate Room-Air conditioning system		Total:_____
		No. of BACnet Gateway	One BACnet Gateway per VRF Network System		Total: _____
		Terminal Register	One per Network Segment (refer to table -9)		Total: _____
		No. of Network Convertor for LonWorks	One per VRF Network System (IU ≦128 & OU ≦100) 【NOTE: Special VRF Network system configuration】		IU number : _____ OU number: _____

Check Item		Check contents	Judgement	Present Status
Number of ref. circuit connected in the network system : _____, Ref. addresses :_____(00～99)				
VRF Network System	Terminal Resistance of transmission line	Terminal resistance of transmission line: From device with connected terminal resistance (OU or SA) to the most distance device	50 ohm ≦ (Resistance value) ≦180 ohm	☐ OK / ☐ Not OK In- between OU (add____) & SA (add___)
		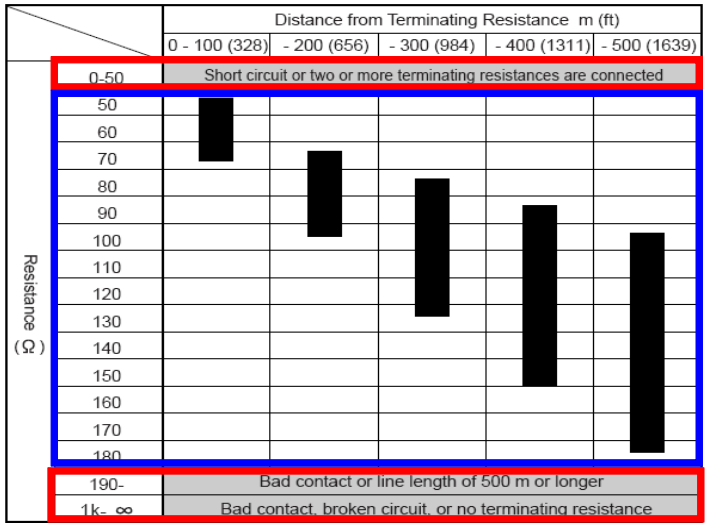		☐ OK / ☐ Not OK In- between SA (add____) & RB (add___)
				☐ OK / ☐ Not OK In- between OU (add____) & SA (add___)

Distance from Terminating Resistance m (ft)

Resistance (Ω)	0 - 100 (328)	- 200 (656)	- 300 (984)	- 400 (1311)	- 500 (1639)
0-50	Short circuit or two or more terminating resistances are connected				
50					
60					
70					
80					
90					
100					
110					
120					
130					
140					
150					
160					
170					
180					
190-	Bad contact or line length of 500 m or longer				
1k- ∞	Bad contact, broken circuit, or no terminating resistance				

1-2-6 Piping installation inspection sheet 1/5

Check Item		Check contents	Judgement	Present Status
Ref. circuit name : _____, Ref. address:_____(00～99)				
Refrigerant system piping	Outlook	Insulation & Fastening	Insulated without gap & properly fastened (Yes / No)	☐Yes / ☐No
		Suction line filter	Is there any external filter in the suction line	☐Yes / ☐No
		Oil Trap	If Distance between OUs 2m , Place oil trap both at suction & at Discharge line	☐Yes / ☐No ☐ Not applicable
	Piping	Actual Pipe Length	Between Master OU and farthest IU (≦165m)	(m)
			(The farthest indoor unit to the first separation tube) - (The nearest indoor unit to the first separation tube) (≦60m)	(m)
			Between first separation tube and farthest IU (≦90m)	(m)
			Total Pipe Length When the outdoor unit is one (≦700m) When the outdoor unit of two or more (≦1000m)	(m)
			Between OU and OU branch kit (≦3m)	(m)
			Between farthest OU and first OU branch kit (≦12m)	(m)
			Between RB units (for multi type RB series connection) (≦ 1m)	(m)
		Height Difference	Between OU and IU (when OU is installed above) (≦50m)	(m)
			Between OU and IU (when OU is installed below) Outdoor temperature ≧ -5 ℃ (≦40m) Outdoor temperature ＜ -5 ℃ (≦5m)	(m)
			Between IUs (≦15m)	(m)
			Between OUs (≦0.5m)	(m)
			Between RB units (≦15m)	(m)
			Between RB unit and IU (≦5m)	(m)
			Between multi type RB units (≦0.02m)	(m)

Check Item	Check contents	Judgement	Present Status
Ref. circuit name: _____, Ref. address: _____(00～99)			
For single type & multi type RB Units	Piping layout (Between RB & IU)	● Existence of additional RB in between RB branch port and indoor unit is prohibited 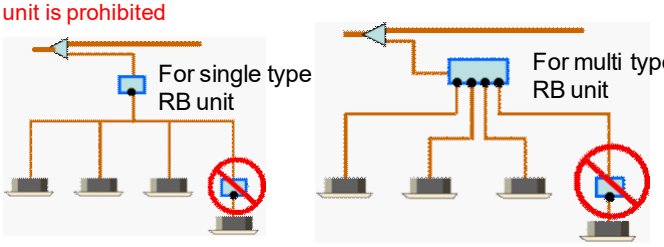 	☐ Correct ☐ Not correct

1-2-6 Piping installation inspection sheet 2/5

Check Item	Check contents	Judgement	Present Status
Ref. circuit name: _____, Ref. address: (_____(00～99)			
For multi type RB Unit	Branch port piping layout (RB branch port vs. IU connection pattern)	2) Connect the IU to the RB unit in order of farthest branch port 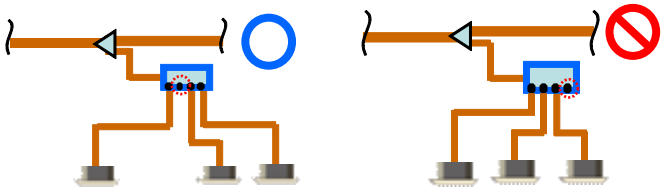	☐ Correct ☐ Not correct
		Keep free branch port within 11 or less per refrigerant cycle. 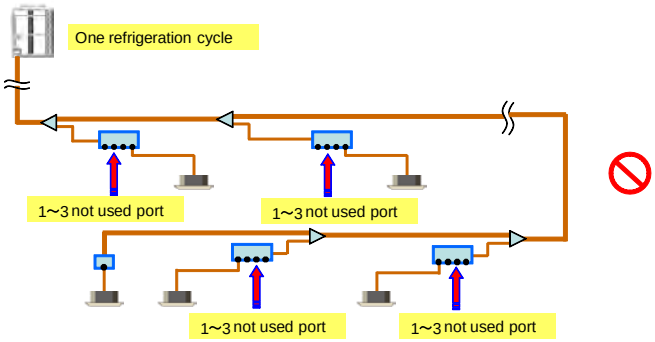	☐ Correct ☐ Not correct

Check Item	Check contents	Judgement	Present Status
Ref. circuit name: _____, Ref. address: (_____(00～99)			
For multi type RB Unit (Example for 4port)	RB series connection	● Maximum two RB units (for multi type) in series is allowable 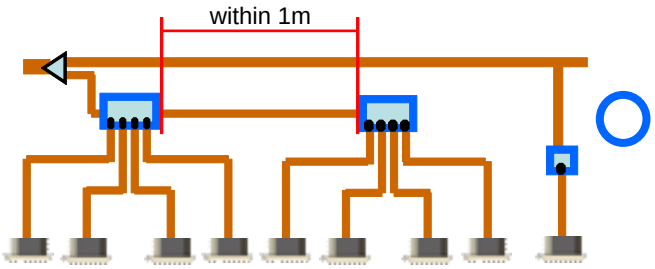 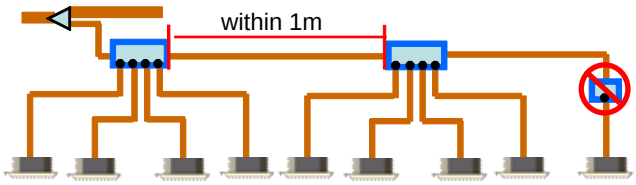	☐ Correct ☐ Not correct

1-2-6 Piping installation inspection sheet 3/5

Check Item	Check contents	Judgement	Present Status
Ref. circuit name: _____, Ref. address: (_____(00～99)			
For multi type RB Unit (Example for 8,12 port)	RB series connection	● Connection of RB unit is prohibited. 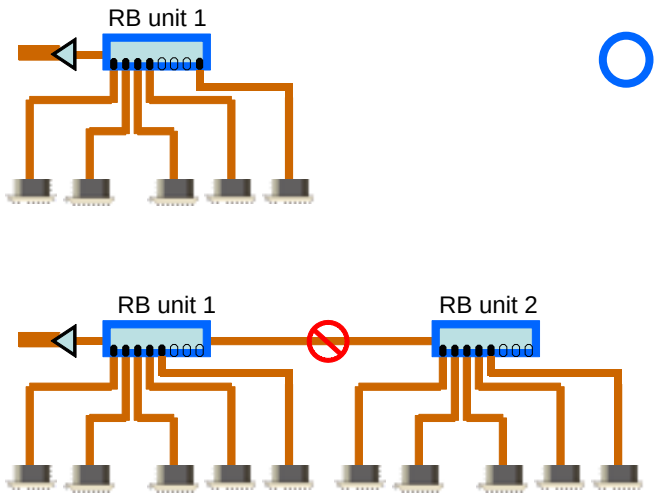	☐ Correct ☐ Not correct
For multi type RB Unit (Example for 8,12 port)	RB series connection	● Existence of additional RB in between RB branch port and indoor unit is prohibited. 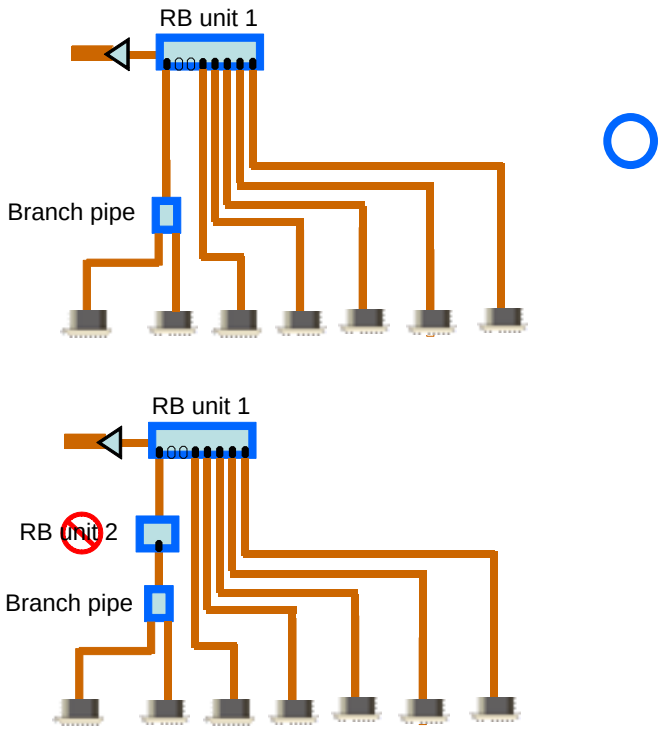	☐ Correct ☐ Not correct

1-2-6 Piping installation inspection sheet 4/5

Check Item	Check contents	Judgement	Present Status
Ref. circuit name: _____, Ref. address: (_____(00～99)			
For multi type RB Unit (Example for 8,12 port)	RB series connection	● For the rules for the ports to be connected to separation tube, refer to “1-2-4. RB unit setting fields setting inspection” on page 1-5. 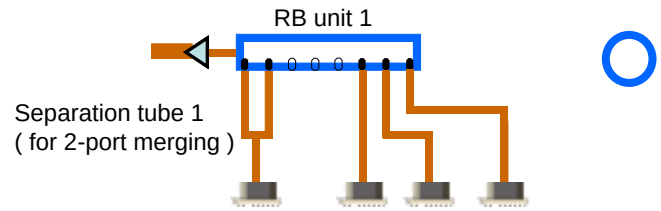 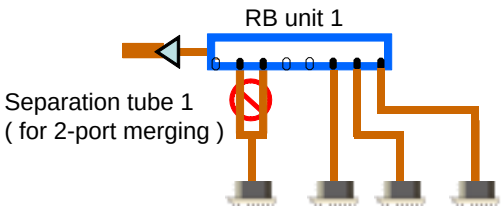 	☐ Correct ☐ Not correct
For multi type RB Unit (Example for 8,12 port)	RB series connection	● For the rules for the ports to be connected to separation tube, refer to “1-2-4. RB unit setting fields setting inspection” on page 1-5. 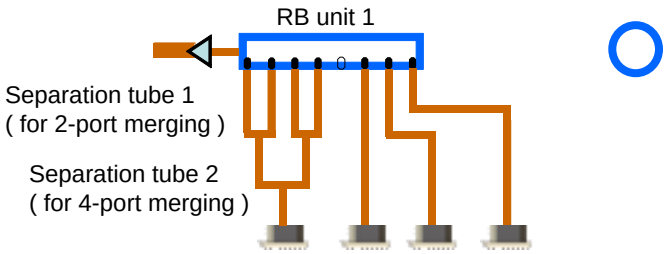 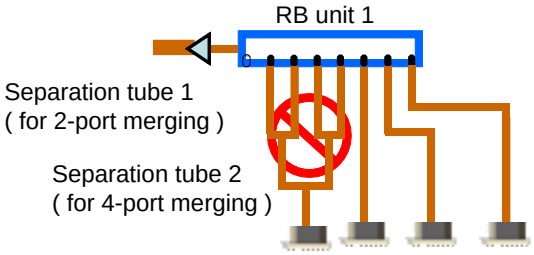 	☐ Correct ☐ Not correct

1-2-6 Piping installation inspection sheet 5/5

Check Item	Check contents	Judgement	Present Status
Ref. circuit name: _____, Ref. address: (_____(00～99)			
For multi type RB Unit (Example for 8,12 port)	RB series connection	● When installation by using separation tubu, installation of multiple indoor units is prohibited. 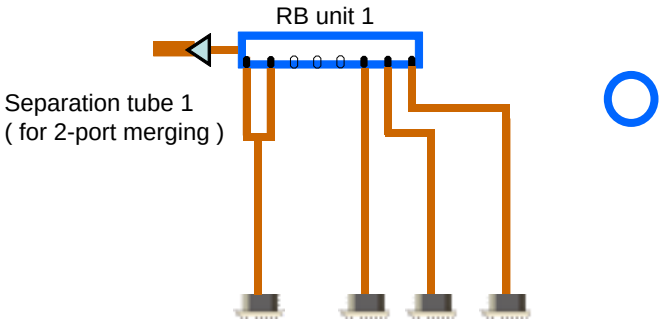 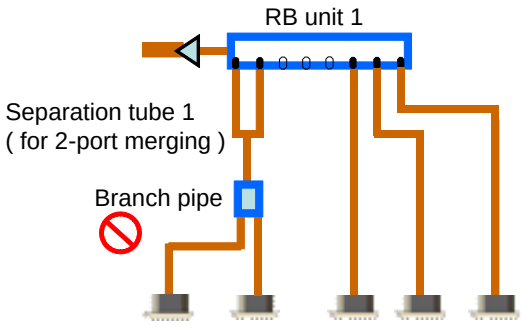 	☐ Correct ☐ Not correct

1-2-7 Refrigerant charge amount inspection sheet

Check Item		Check contents		Judgement	Present Status
Ref. circuit name: _____, Ref. address :_____(00～99)					
Additional Charged Refrigerant	Outdoor Unit	OU Model Name		Additional Refrigerant Amount for OU	
		AJ* 072G / AJ*090G / AJ*108G AJ* 126G / AJ* 144G		AJ*072G / AJ* 090G / AJ*108G : 3.0 (kg) AJ* 126G / AJ* 144G : 6.8 (kg)	(kg)
	Connecting Pipe	Liquid Pipe Length		Additional Refrigerant Amount based on the liquid pipe length	
		@ 6.35mm	(m)	For pipe diameter ϕ 6.35mm : 0.021 kg/m	(kg)
		@ 9.52mm	(m)	For pipe diameter ϕ 9.52mm : 0.058 kg/m	(kg)
		@ 12.7mm	(m)	For pipe diameter ϕ 12.7mm : 0.114 kg/m	(kg)
		@ 15.88mm	(m)	For pipe diameter ϕ 15.88mm : 0.178 kg/m	(kg)
		@ 19.05mm	(m)	For pipe diameter ϕ 19.05mm : 0.268 kg/m	(kg)
Total Additional Amount of Charged Refrigerant ＝					(kg)

Note: In the refrigerant system, overall refrigerant amount ≦ 35 kg (for 1 OU), ≦ 70kg (for 2 OUs) and ≦ 105 kg (for 3 OUs)

Overall refrigerant amount (kg) in the refrigerant system = Factory charged refrigerant (kg) for OU※ + Total additional amount of charged refrigerant (kg)【= Additional charged refrigerant for OU + Additional charged refrigerant for connecting pipe】

※ Factory charged refrigerant for outdoor unit :
AJ* 072G or AJ*090G or AJ*108G or
AJ* 126G or AJ* 144G : 11.8(kg)

1-2-8 3-way valve opening inspection sheet

Check Item		Check contents	Judgement	Present Status
Ref. circuit name: _____, Ref. address :_____(00～99)				
Outdoor Unit	3-way valves opening	3-way valve of each OU at - Discharge pipe side - Suction pipe side - Liquid pipe side	Master OU (all 3-way valve must be full open)	☐Yes / ☐ No
			Slave1 OU (all 3-way valve must be full open)	☐Yes / ☐ No
			Slave2 OU (all 3-way valve must be full open)	☐Yes / ☐ No

1-3 Check Items After Power ON

Overview of system operation check procedure

Step-1: Connect Service Tool PC to the VRF VR-IV system.
Do scaning of refrigerant system which should be commissioned.

Step-2: Compare the number of installed units (OU, RB Group and IU) with the System List data obtained from the Service Tool.

Step-3: Operate all Indoor Units under Test Mode Cooling (Select Test mode either cool or heat based on ambient temperature.).
Step-3-1: During operation, check the RB unit SV status and IU thermistor value
Step-3-2: After 1-hour operation, check the Refrigerant System

Step-4: After 1-hour Test run operation (excluding special operation),
Step-4-1: Switching the operation mode of IU, in order of RB group number, from cool to heat.
- Check the RB unit SV status and IU thermistor value
Step-4-2: When all IUs run under heating, continue operation minimum 15min. And check the Refrigerant system

1-3-1 Power source check sheet

Check Item		Check contents	Judgement		Present Status
Ref. circuit name _____, Ref. address _____(00～99)					
Power Source	Outdoor Unit	Actual Power Supply (V) Between R-S / S-T / T-R < 3, 4Wire + ground, 50Hz >	AC (382 - 410V) ±10% Incoming voltage per breaker	Master (V):	R-S:_____ / S-T:____ / T-R:____
				Slave -1 (V):	R-S:_____ / S-T:____ / T-R:____
				Slave -2 (V):	R-S:_____ / S-T:____ / T-R:____
	Indoor Unit & RB Unit	Actual Power Supply (V) < 1, 2Wire + ground, 50Hz >	AC (220 - 240V) ±10% Incoming voltage per breaker	Breaker-1 (V):	_____
				Breaker-2 (V):	_____
				Breaker-3 (V):	_____
					_____

1-3-2 Error indication check sheet 1/2

Check Contents		Judgement	Present Status
Ref. circuit name _____, Ref. address _____(00～99)			
For each refrigerant system	Outdoor unit	Check PCB Lighting status	
	・Master	・LED101 (green light) Judgment : must be ON ⇒ Yes / No 【Note : LED102 (Red) must not be flash & must not be ON】 ・7-SEG LED Judgment : 'Sn' displayed ⇒ Yes / No	LED101: ☐Yes ☐No 7-SEG : ☐Yes ☐No
	・Slave-1		LED101: ☐Yes ☐No 7-SEG : ☐Yes ☐No
	・Slave-2		LED101: ☐Yes ☐No 7-SEG : ☐Yes ☐No
	Indoor unit	Check LED & RC display status	
	IU address _____ (RB address _____)	Indoor Unit Celling & Small Cassette	☐Yes ☐No
	IU address _____ (RB address _____)		☐Yes ☐No
	IU address _____ (RB address _____)	● For Wall mounted, Compact cassette, 4-way flow cassette, Circular flow cassette, Compact floor, Floor/Ceiling & Ceiling type IU	☐Yes ☐No
	IU address _____ (RB address _____)		☐Yes ☐No
	IU address _____ (RB address _____)	Check IU operation LED & timer LED condition Judgment : must be flashing alternately ⇒ Yes / No	☐Yes ☐No
	IU address _____ (RB address _____)		☐Yes ☐No
	IU address _____ (RB address _____)	● 3D flow cassette, Low static pressure duct (Mini duct), Low static pressure duct (Slim duct)/Slim concealed froor, Medium static pressure duct & High static pressure duct type IU	☐Yes ☐No
	IU address _____ (RB address _____)		☐Yes ☐No
	IU address _____ (RB address _____)		☐Yes ☐No
	IU address _____ (RB address _____)	Check Wired RC (3-wire) display screen Judgment : Clock display "AM 12:00" will appear ⇒ Yes / No	☐Yes ☐No
	IU address _____ (RB address _____)	Check Wired RC (2-wire) display screen Judgment : Language selection screen will appear ⇒ Yes / No	☐Yes ☐No
	IU address _____ (RB address _____)		☐Yes ☐No

1-3-2 Error indication check sheet 2/2

Check Contents		Judgement	Present Status	
Ref. circuit name _____, Ref. address _____(00～99)				
	RB unit & respective IU address (Design Value)	Check RB unit PCB-LED status		
For each refrigerant system	RB address _____ (IU address _____)	LED1 (Green) Judgment : must be ON ☐Yes / No **Note:** LED2 (Red) of RB unit must not be ON	☐Yes	☐No
	RB address _____ (IU address _____)		☐Yes	☐No
	RB address _____ (IU address _____)		☐Yes	☐No
	RB address _____ (IU address _____)		☐Yes	☐No
	RB address _____ (IU address _____)		☐Yes	☐No
	RB address _____ (IU address _____)		☐Yes	☐No
	RB address _____ (IU address _____)		☐Yes	☐No
	RB address _____ (IU address _____)		☐Yes	☐No
	RB address _____ (IU address _____)		☐Yes	☐No
	RB address _____ (IU address _____)		☐Yes	☐No
	RB address _____ (IU address _____)		☐Yes	☐No
	RB address _____ (IU address _____)		☐Yes	☐No
	RB address _____ (IU address _____)		☐Yes	☐No
	RB address _____ (IU address _____)		☐Yes	☐No

1-3-3 Installed unit and their addresses check sheet

Check Contents	Check items	Checking method	Judgement	Present Status	
Ref. circuit : Name _____, Ref. address _____(select from 00 to 99)				Design value	Check status
Installed units and their addresses check	Number of IU IU address	Checked by Service Tool	Number of units and their address appeared in the System List must be same as the Actual Design value Judgment: (OK / Not OK)	Connected number of IU _____ Connected number of RB Gr. ___ IU add _____ (RB add ____) IU add _____ (RB add ____) IU add _____ (RB add ____) IU add _____ (RB add ____) IU add _____ (RB add ____) IU add _____ (RB add ____)	☐OK ☐Not OK
	Number of RB unit RB unit address			IU add _____ (RB add ____) IU add _____ (RB add ____) IU add _____ (RB add ____) IU add _____ (RB add ____) IU add _____ (RB add ____) IU add _____ (RB add ____) IU add _____ (RB add ____) IU add _____ (RB add ____) IU add _____ (RB add ____)	☐OK ☐Not OK

1-3-4 Transmission line connection check sheet

Note: The following check method by using test-run is necessary for checking of incorrect transmission wire connection.

Check Contents	Check items	Checking method	Judgement	Present Status		
Ref. circuit : Name _____, Ref. address _____(select from 00 to 99)				Design value	Check status	
					① IU	② RB
Transmission line connection confirmation check	Cooling status	Operate all Indoor Units under Testrun Cooling Mode by using Commissioning Function of Service Tool	Judgment Point during test - mode cooling : ① For Indoor Unit - Thermistor value 【(TH21 - TH22) 8 ℃】 (Yes / No) ② For RB Unit - SV status 【SVB1 & SVS must ON】 (Yes / No)	IU add _____ (RB add ____)	☐Yes / ☐No	☐Yes / ☐No
				IU add _____ (RB add ____)	☐Yes / ☐No	☐Yes / ☐No
				IU add _____ (RB add ____)	☐Yes / ☐No	☐Yes / ☐No
				IU add _____ (RB add ____)	☐Yes / ☐No	☐Yes / ☐No
				IU add _____ (RB add ____)	☐Yes / ☐No	☐Yes / ☐No
				IU add _____ (RB add ____)	☐Yes / ☐No	☐Yes / ☐No
				IU add _____ (RB add ____)	☐Yes / ☐No	☐Yes / ☐No
				IU add _____ (RB add ____)	☐Yes / ☐No	☐Yes / ☐No
				IU add _____ (RB add ____)	☐Yes / ☐No	☐Yes / ☐No
				IU add _____ (RB add ____)	☐Yes / ☐No	☐Yes / ☐No
				IU add _____ (RB add ____)	☐Yes / ☐No	☐Yes / ☐No
				IU add _____ (RB add ____)	☐Yes / ☐No	☐Yes / ☐No
				IU add _____ (RB add ____)	☐Yes / ☐No	☐Yes / ☐No
				IU add _____ (RB add ____)	☐Yes / ☐No	☐Yes / ☐No

Check Contents	Check items	Checking method	Judgement	Present Status	
Ref. circuit : Name _____, Ref. address _____(select from 00 to 99)				Design value	Check status
					IU
Transmission line connection confirmation	Heating status	Switching the operation of IU from cool to heat in order of RB group number by using, Control function of Service Tool	Judgment Point after switching IU mode from cool to heat in order of RB group number: For Indoor Unit - Thermistor value (TH24 > TH21) (Yes / No)	IU add _____ (RB add ____)	☐ Yes / ☐ No
				IU add _____ (RB add ____)	☐ Yes / ☐ No
				IU add _____ (RB add ____)	☐ Yes / ☐ No
				IU add _____ (RB add ____)	☐ Yes / ☐ No
				IU add _____ (RB add ____)	☐ Yes / ☐ No
				IU add _____ (RB add ____)	☐ Yes / ☐ No
				IU add _____ (RB add ____)	☐ Yes / ☐ No
				IU add _____ (RB add ____)	☐ Yes / ☐ No
				IU add _____ (RB add ____)	☐ Yes / ☐ No
				IU add _____ (RB add ____)	☐ Yes / ☐ No
				IU add _____ (RB add ____)	☐ Yes / ☐ No
				IU add _____ (RB add ____)	☐ Yes / ☐ No
				IU add _____ (RB add ____)	☐ Yes / ☐ No
				IU add _____ (RB add ____)	☐ Yes / ☐ No
				IU add _____ (RB add ____)	☐ Yes / ☐ No

1-3-5 Operation check sheet

Check Contents		Judgement	Present Status
Refrigerant Circuit : Name _____, Address _____(00～99)			
Test-run operation Cooling mode Conducted by Service Tool	・Degree of sub-cool at OU sub - cooler side should be, 5℃≦ ΔTsc≦ 20℃ AND ・Pulse value EEV3 should be, EEV3≦400P	ΔTsc _____ ℃ EEV3 _____ P	☐ Yes / ☐ No
	・Discharge refrigerant pressure should be, 2.5MPa ≦ Pd ≦ 3.3MPa	Pd _____ MPa	☐Yes / ☐ No
	・Suction refrigerant pressure should be, 0.7MPa ≦ Ps ≦ 1.2MPa	Ps _____ MPa	☐ Yes / ☐ No
	・Discharge refrigerant temp. should be, Td ≦100℃ AND ・Discharge refrigerant superheat should be, ΔTshd > 10℃	Td _____ ℃ ΔTshd _____ ℃	☐ Yes / ☐ No
	・IU refg. superheat should be, 2℃≦ΔTshe≦ 20℃ AND ・RB group SV (SBS & SVB1) should be ON AND ・Pulse value IU EEV should be, EEV≦1000P	ΔTshe _____ ℃ SBS & SVB1 ON IU EEV _____ P	☐Yes / ☐ No
	・Ps between Master & Slave OUs should be, ΔPs≦0.2 MPa	ΔPs _____ MPa	☐Yes / ☐ No
	・Air temperature of each RB group IU should be, ΔTair cooling > 8℃	ΔTair cooling ____℃	☐Yes / ☐ No
	・No water fall from IU ・No abnormal noise from IU		☐Yes / ☐ No

Reference mark of Service tool

ΔTsc = Saturated liquid temperature of HPS - TH5
ΔTshd = TH1- Saturated liquid temperature of HPS
ΔTshe = TH24 - TH22
ΔTair cooling = TH21 - Outlet Air temperature
Td = TH1
Pd = HPS
Ps = LPS

Check Contents		Judgement	Present Status
Refrigerant Circuit : Name _____, Address _____(00～99)			
Test-run operation Heating mode Conducted by Service Tool	・Discharge refrigerant pressure should be, 2.5MPa ≦ Pd ≦ 3.3MPa	Pd _____ MPa	☐ Yes / ☐ No
	・Suction refrigerant pressure should be, 0.3MPa ≦ Ps ≦ 1.2MPa	Ps _____ MPa	☐ Yes / ☐ No
	・Discharge refrigerant temperature should be, Td ≦100℃ AND ・Discharge refrigerant superheat should be, ΔTshd > 10℃	Td _____ ℃ ΔTshd _____ ℃	☐ Yes / ☐ No
	・Degree of sub cool (at IU side) should be, 4 ℃≦ ΔTsc≦ 7 ℃ AND ・RB group SV (SBD1 & SVB2) should be ON	ΔTsc _____ ℃ SVD1 & SVB2 ON	☐ Yes / ☐ No
	・Refrigerant superheat (at OU side) should be, 2 ℃≦ ΔTshe1 & ΔTshe2≦ 5℃	ΔTshe _____ ℃	☐ Yes / ☐ No
	・Pd between Master & Slave OUs should be, ΔPs≦0.2 MPa ・ΔT_{OUHE} at each OU connected in series should be, ΔT_{OUHE*}> 5℃	ΔPs _____ MPa ΔT_{OUHE} _____ ℃	☐ Yes / ☐ No
	・Air temperature of each RB group IU should be, ΔTair heating > 15℃	ΔTair heating ____℃	☐ Yes / ☐ No

Reference mark of Service tool

ΔTsc = Saturated liquid temperature of HPS - TH22
ΔTshd = TH1- Saturated liquid temperature of HPS
ΔTair heating = TH21 - Outlet Air temperature
ΔTshe1 = TH7 - Saturated vapor temperature of LPS
ΔTshe2 = TH8 - Saturated vapor temperature of LPS
$\Delta T_{OUHE\ 1}$ = TH4 - TH9
$\Delta T_{OUHE\ 2}$ = TH4 - TH10

1-4 Test Run Operation

1-4-1 Test Run From Outdoor unit PC Board

All the indoor units connected to the outdoor unit can be test-operated by push button setting. (Only for master unit)

● SWITCH POSITION

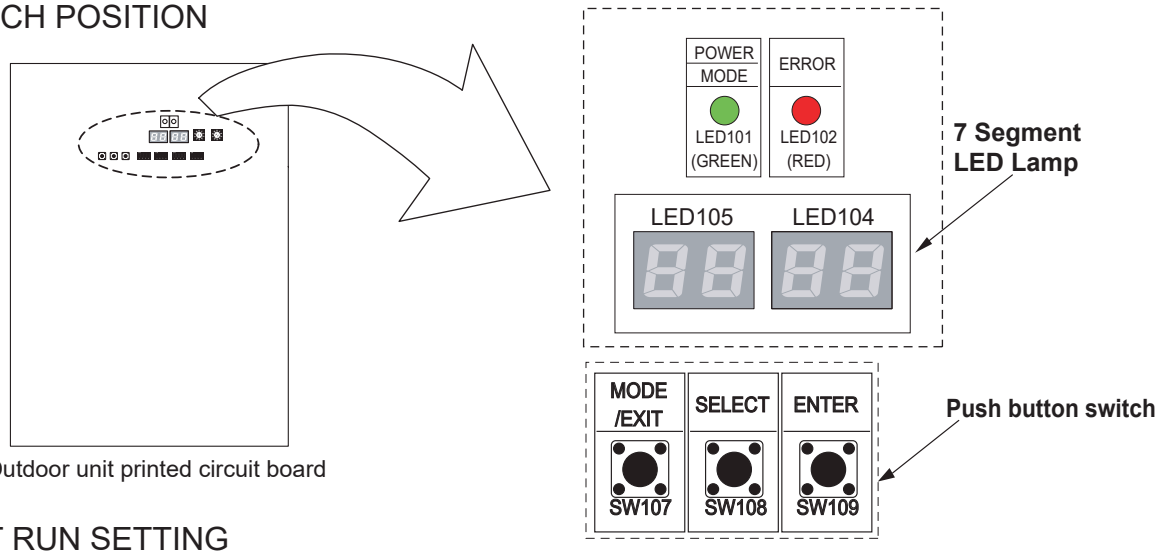

● TEST RUN SETTING

For a detailed description of push button operation, refer to the [D&T manual Chapter 6. SYSTEM DESIGN]

< Monitoring condition >

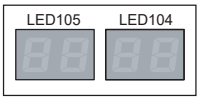

(1) Press the MODE / EXIT button (SW107) once.

< Mode select condition >

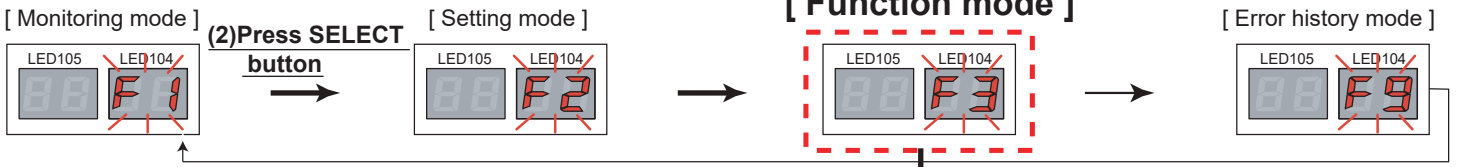

Do not set "F8". "F8" is for factory use only and is not for a service purpose.

(3) Press the ENTER button (SW109)

< Fuction select condition >

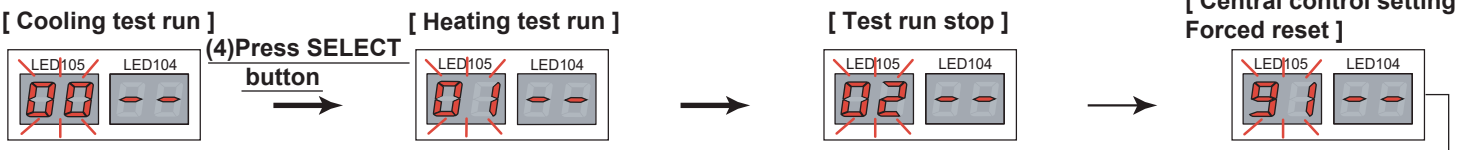

(5) Hold down the ENTER button (SW109) for at least 3 seconds.

< Pursuance completion >

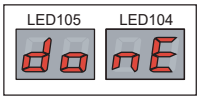

(6) Press the ENTER button (SW109) or Time out (5 seconds)

< Return to mode select condition >

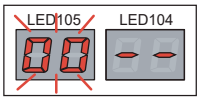

(7) Press the MODE / EXIT button

< Return to monitoring condition >

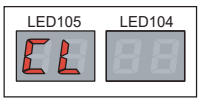

example,
Normal indicate : [**Cooling mode**]

1-4-2 Test Run From Remote Controller

1. Standard wired remote controller

UTY - RNK ✱

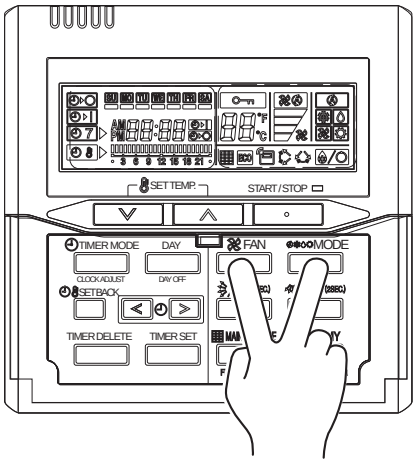

Stop the indoor unit. Push the button and button simultaneously for more than two seconds.
The air conditioner will start to conduct a test run and "01" will display on the remote controller display.
However, the ∨, ∧ setting button does not have function, but all other buttons, displays, and protection functions will operate.

- Perform the test operation for 60 minutes.
- To stop test run, push the START / STOP button of the standard wired remote controller.
- For the operation method, refer to the operating manual and perform operation check.
- Check that there are no abnormal sounds or vibration sounds during test run operation.

2. Standard wireless remote controller

UTY - LNH ✱

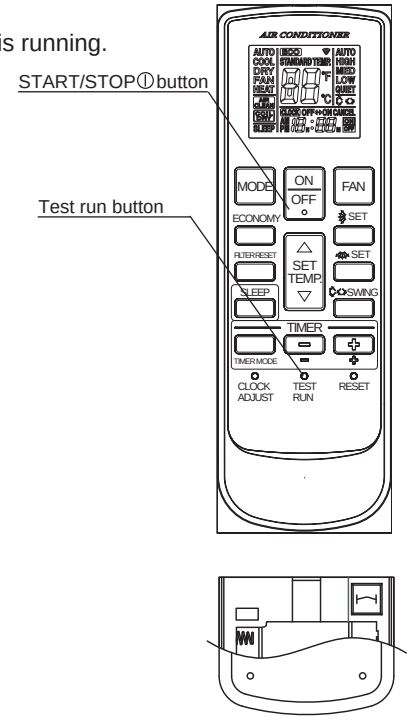

- Short two metal contacts under the battery compartment lid, while the air conditioner is running.
- To stop test run operation, push button of the wireless remote controller.
  When the air conditioner is being test run, the OPERATION and TIMER lamps of indoor unit flash slowly at the same time.

3. Simple remote controller

UTY - RSK ✱

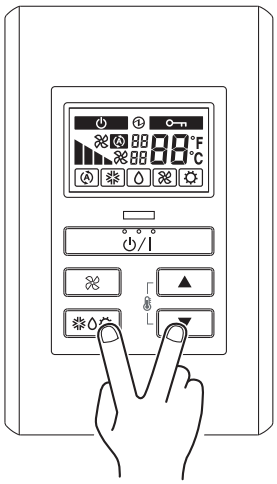

Stop the indoor and outdoor units. Push the remote controller button and button simultaneously for more than three seconds. The air conditioner will start to conduct a test run and "01" will display on the temperature display.
However the setting button does not have function but all other buttons, displays and protection functions will operate.

- To stop test running press the button of the simple remote controller.
- For the operation method refer to the operating manual and perform operation check.
- Check that there are no abnormal sounds or vibration sounds during test run operation.

4. Touch panel controller

UTY - DTG＊

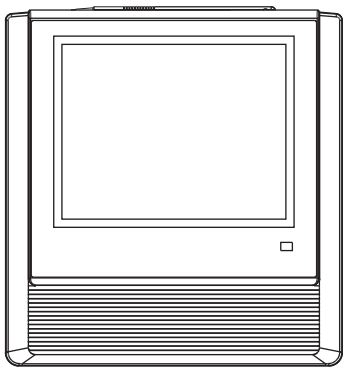

(1) Select the objective you want to test run.
Select the objective icon or list at the monitor screen. (Multiple selections is possible)
Select all the devices registered as objectives by pressing "Select All" on the monitor screen.
(2) After objective selection at (1), switch to the <Setting screen> by pressing "Operation".
(3) Switch to the <Detail setting screen > by pressing "Optional setting" on the setting screen,
(4) Press "Start" button and OK on the details setting screen.

Test run continues for 60 minutes.
To interrupt test run, select the device being the test run and excute an operation stop.
At the monitor screen, test run can cancel by selecting objective device and press OFF.

<Setting screen>

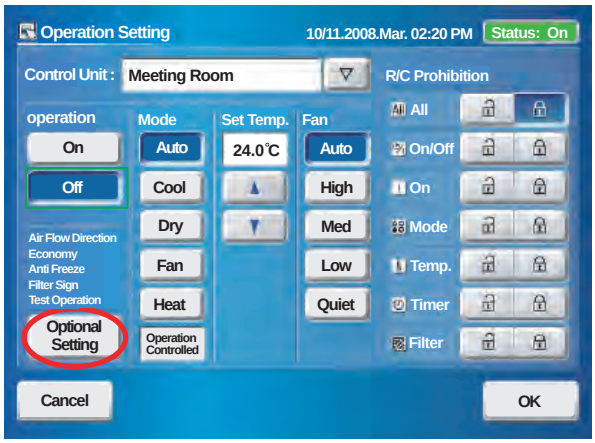

<Detail Setting screen>

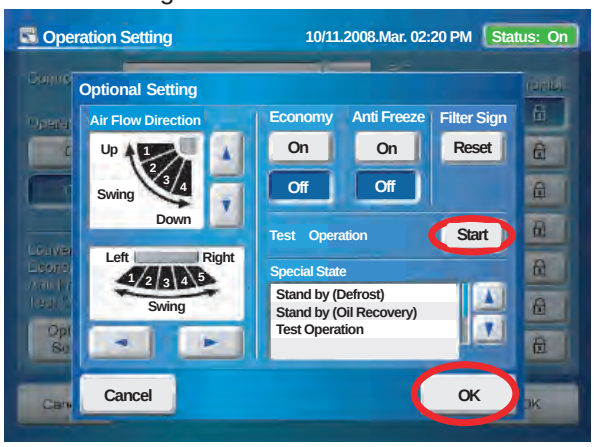

5. Central remote controller

UTY-DCG＊

(1) Press " " button.
(2) Press "Set up Menue" and input password.
(3) Select "Indoor unit special setting" by presing or button.
(4) Select "Test operation by presing" or button
(5) Press the "Select ALL button" or "Identify unit" button
[Select All]: All of R.C.Group (Indoor units)
[Identify Unit] : Specific R.C.Group (Indoor unit)

(6) Press the " Start " button
The test run continues for 60 minutes.
To interrupt test run before it is complet, return to the "Monitor Mode Screen",
and press ON/ OFF.

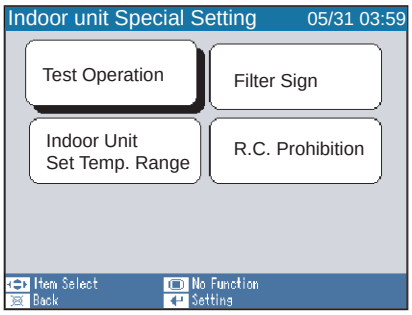

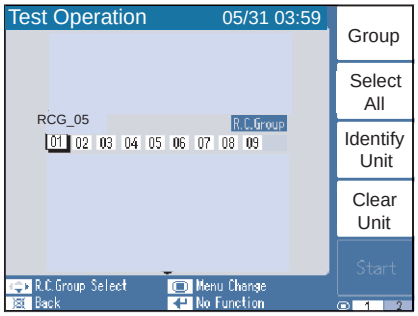

6. 2-wire type wired remote controller

UTY - RNR∗

(1) Press "Menu" on the monitor screen. the < Main Menu screen > is displayed.
(2) Press "Next Page" and press "Maintenance"
(3) Press "Next Page" and press "Test Run". the <Test run screen > is displayed.
(4) Press "OK"
The test run continues for 60 minutes.
To interrupt test run before it is complet, return to the "Monitor Mode Screen", and press ON/ OFF.

< Monitor Mode Screen >

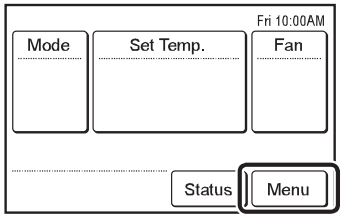

< Main Manu Screen >

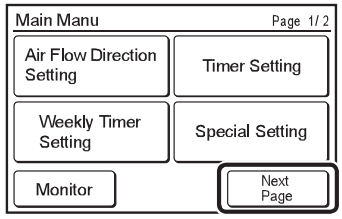

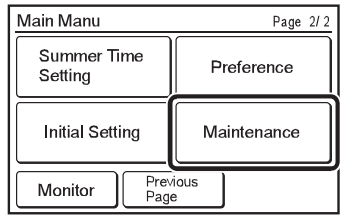

< Maintenance Screen >

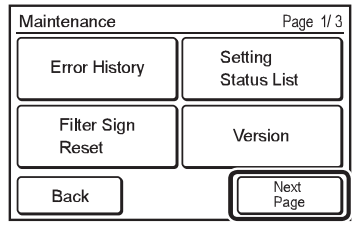

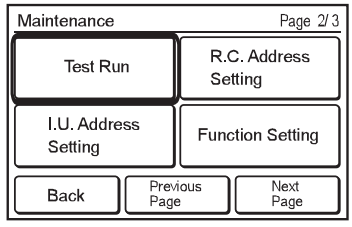

< Test Run Screen >

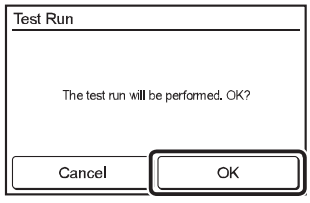

1-5 TEST RUN CONTROL

1. When the test run signal is transmitted from standard wired, wireless remote controller, simple remote controller, transmitted network, and outdoor unit.

(1) The test run operation starts and the electric expansion valve is controlled to a maximum flow, regardless of the temperature condition.
(2) Frost prevention operation has priority over item(1).
(3) Whether state of the indoor unit operates or stops, All units in the same refrigerant circuit will start to conduct a test run in accordance with the operation mode set by push switch of outdoor unit (see 1 - 2 - 3).
(4) After 60 minutes passes, the test run stops.
(5) Test running initialization is shown below.

Operating Mode	EXCEPT FOR THE DUCT MODEL		DUCT TYPE	
	Cooling	Heating	Cooling	Heating
Fan speed	Hi	Hi	Hi	Hi
Room Temperature Indication	18	30	18	30
Vertical Air Direction Panel	Position ①	Position ④	————	————
Swing	OFF	OFF	————	————

***Example**

■ **COMPACT CASSETTE TYPE**
4-WAY FLOW CASSETTE
CIRCULAR FLOW CASSETTE

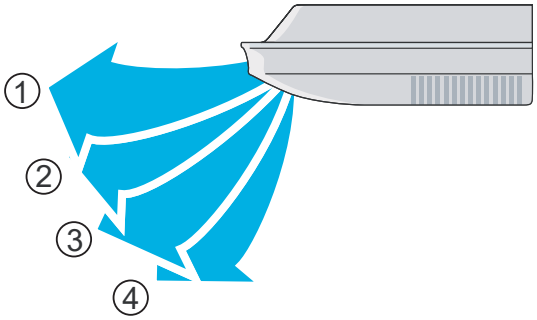

■ **CEILING TYPE**
FLOOR/CEILING

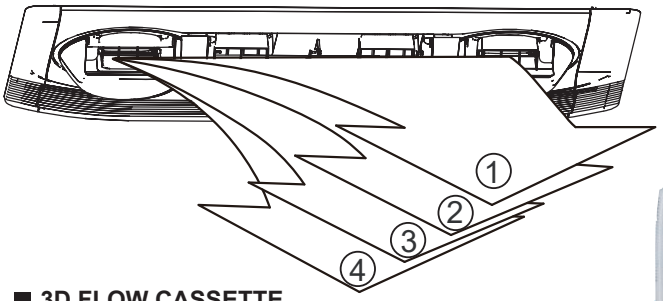

■ **3D FLOW CASSETTE**

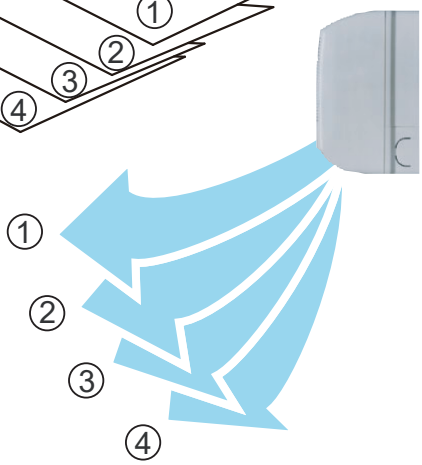

■ **WALL MOUNTED TYPE**

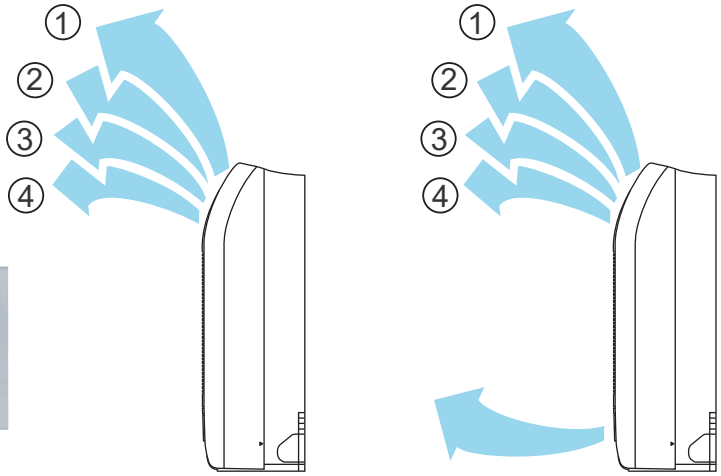

Set the air outlet selection switch to

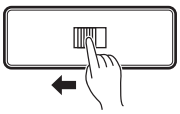

Set the air outlet selection switch to

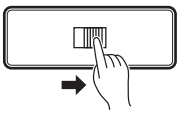

■ **COMPACT FLOOR**
FLOOR/CEILING

1-6 Field Setting And Monitor Mode List for Outdoor unit

	Classification	ITEM CODE No.	Setting Mode	ITEM CODE No.	Information contents
Push switch on outdoor unit PCB Monitor mode [F1]	Device and system	00	Connected number of indoor unit		The number of the communicating unit is displayed
		01	Software version of outdoor unit		Software version : E●●●V○○☆■□L△△-◎
		02	Software version of INV PCB		[E●●●] [V○○] [☆■□] [L△△] [-◎] displays by five items
		03	Software version of communication PCB		It skips when there is no suffix「-◎」
	Operation of each part	10	Rotational speed of outdoor unit fan motor		The rotational speed of the outdoor unit fan motor is displayed [0 ~ 999] rpm
		11	Rotational speed of INV compressor		The rotational speed of the compressor is displayed [0 ~ 999] rps
		12	Current value of INV compressor		Current value of INV compressor is displayed [0.00 ~ 99.99] A
		14	Pulse of EEV1		Pulse of EEV1 is displayed [0 ~ 9999] pls
		15	Pulse of EEV2		Pulse of EEV2 is displayed [0 ~ 9999] pls
		16	Pulse of EEV3		Pulse of EEV3 is displayed [0 ~ 9999] pls
	Time guard	20	Accumulated current time		Accumulated current time is displayed [0 ~ 9999] ×10hour
		21	INV compressor accumulated time [Cooling]		Accumulated time is displayed in the cooling operation of the INV compressor [0 ~ 9999] ×10hour
		22	INV compressor accumulated time [Heating]		Accumulated time is displayed in the heating operation of the INV compressor [0 ~ 9999] ×10hour
	Refrigerant cycle data 1	30	Information on Thermistor 1 (Discharge temperature sensor 1)		The value of the Thermistor 1 is displayed [-99.9 ~ 999.9] ℃ or ℉
		31	Information on Thermistor 2 (Outdoor temperature sensor)		The value of the Thermistor 2 is displayed [-99.9 ~ 999.9] ℃ or ℉
		32	Information on Thermistor 3 (Suction temperature sensor)		The value of the Thermistor 3 is displayed [-99.9 ~ 999.9] ℃ or ℉
		33	Information on Thermistor 4 (Liquid temperature sensor 1)		The value of the Thermistor 4 is displayed [-99.9 ~ 999.9] ℃ or ℉
		34	Information on Thermistor 5 (Liquid temperature sensor 2)		The value of the Thermistor 5 is displayed [-99.9 ~ 999.9] ℃ or ℉
		35	Information on Thermistor 6 (Sub-cool H-Ex (outlet) sensor)		The value of the Thermistor 6 is displayed [-99.9 ~ 999.9] ℃ or ℉
		36	Information on Thermistor 7 (Heat exchanger 1 gas sensor1)		The value of the Thermistor 7 is displayed [-99.9 ~ 999.9] ℃ or ℉
		37	Information on Thermistor 8 (Heat exchanger 2 gas sensor2)		The value of the Thermistor 8 is displayed [-99.9 ~ 999.9] ℃ or ℉
		38	Information on Thermistor 9 (Heat exchanger 1 liquid sensor)		The value of the Thermistor 9 is displayed [-99.9 ~ 999.9] ℃ or ℉
		39	Information on Thermistor 10 (Heat exchanger 2 liquid sensor)		The value of the Thermistor 10 is displayed [-99.9 ~ 999.9] ℃ or ℉
	Refrigerant cycle data 2	40	Information on Thermistor 11 (Compressor temperature sensor)		The value of the Thermistor 11 is displayed [-99.9 ~ 999.9] ℃ or ℉
	Refrigerant cycle data 3	50	Information on pressure sensor 1 (High pressure sensor)		The value of the pressure sensor 1 is displayed If unit is [MPa], it is displayed as [0.00 ~ 9.99] [psi], it is displayed as [0.0 ~ 999.9]
		51	Information on pressure sensor 2 (Low pressure sensor)		The value of the pressure sensor 2 is displayed If unit is [MPa], it is displayed as [0.00 ~ 9.99] [psi], it is displayed as [0.0 ~ 999.9]

	Classification	ITEM CODE No.	Setting Mode	ITEM CODE No.	Setting Function	Defalt
Push switch on outdoor unit PCB Setting mode [F2]	Install	00	Pipe length setting	00	40-65m	○
				01	0-40m	
				02	65-90m	
				03	90-120m	
				04	120-150m	
	Correction	10	Sequential start shift	00	Normal	○
				01	21sec. Delay	
				02	42sec. Delay	
				03	63sec. Delay	
		11	Cooling capacity shift	00	Normal mode	○
				01	Save energy mode 1 (+2°C)	
				02	High power mode 1 (-2°C)	
				03	High power mode 2 (-4°C)	
				04	Save Enagy mode 2 (+5℃)	
		12	Heating capacity shift	00	Normal mode	○
				01	Save energy mode (-2°C)	
				02	High power mode 1 (+2°C)	
				03	High power mode 2 (+4°C)	
		13,14,15	(Forbidden)	00		○
				01		
		19	(Forbidden)	00		○
				01		
	Change of function 1	20	Switching between batch stop or emergency stop	00	Batch stop	○
				01	Emergency stop	
		22	Snow falling protection fan mode	00	Valid	○
				01	Invalid	
		23	Interval setting for snow falling protection fan mode	00	Standard (30min)	○
				01	Short 1 (5min)	
				02	Short 2 (10min)	
				03	Short 3 (20min)	
		24	High static pressure mode	00	Standard	○
				01	High static pressure 1 (equivalent to 30Pa)	
				02	High static pressure 2 (equivalent to 80Pa)	
				03	(Forbidden)	
		25	(Forbidden)	00		○
				01		
		26	(Forbidden)	00		○
				01		
		27	(Forbidden)	00		○
				01		
		28	(Forbidden)	00		○
				01		
		29	(Forbidden)	00		○
				01		
	Change of function 2	30	Energy saving level setting	00	Level 1 (stop)	○
				01	Level 2 (operated at 40% capacity)	
				02	Level 3 (operated at 60% capacity)	
				03	Level 4 (operated at 80% capacity)	
				04	Level 5 (operated at 100% capacity)	
		32	(Forbidden)	00		○
				01		
		33	(Forbidden)	00		○
				01		
		35	(Forbidden)	00		○
				01		
		36	(Forbidden)	00		○
				01		
		37	(Forbidden)	00		○
				01		
	Low noise setting 1	40	Capacity priority setting (in low noise mode)	00	Off (quiet priority)	○
				01	On (capacity priority)	
		41	Low noise mode setting	00	Off (Normal)	○
				01	On (Low noise mode operation is always done)	
		42	Low noise mode operation level setting	00	Level 1 (55dB)	○
				01	Level 2 (50dB)	
	Change of function 3	53	(Forbidden)	00		○
				01		
		54	(Forbidden)	00		○
				01		
	Abnormal corresponding	60	Back up operation 1	00*1	On	○
				01*2	Off	
		61	(Forbidden)	00	On	○
				01	Off	
		62	(Forbidden)	00	On	○
				01	Off	
		63	(Forbidden)	00	On	○
				01	Off	

	Classification	ITEM CODE No.	Setting Mode	ITEM CODE No.	Setting Function	Defalt
Push switch on outdoor unit PCB Setting mode [F2]	External device setting	70	Electricity meter No. setting 1 (Set the ones digit and tens digit of the No of the electricity meter connected to CN135.)	00~99 *3	Setting number x00~x99 (Refer to Design & Technical Manual for details.)	00
		71	Electricity meter No. setting 2 (Set the hundreds digit of the No. of the electricity meter connected to CN135.)	00~02 *3	Setting number 0xx~2xx (Refer to Design & Technical Manual for details.)	00
		72	Electricity meter pulse setting 1 (Set the ones digit and tens digit of the No. of the electricity meter pulse setting connected to CN135.)	00~99 *4	Setting number xx00~xx99 (Refer to Design & Technical Manual for details.)	00
		73	Electricity meter pulse setting 2 (Set the hundreds digit and thousands digit of the electricity meter pulse setting connected to CN135.)	00~99 *4	Setting number 00xx~99xx (Refer to Design & Technical Manual for details.)	00
	Uncategorized	91	(Forbidden)	00		○
				01		
		95	(Forbidden)	00		○
				01		
		96	(Forbidden)	00		○
				01		

*1 : If one of compressor fails, backup operation will be performed by the remaining compressors.(For starting the system SET4-2 switching is required)
*2 : If one of compressor fails, all units will be abnormal stop.
*3 : When electricity meter No. is set to "000" and "201 to 299", the pulses input to CN135 become ineffective.
Available setting number is "001" to "200"
*4 : When the electricity meter pulse setting is set to "0000", the pulses input to CN135 become ineffective.
Available setting number is "0001" to "9999"

		ITEM CODE No.	Setting Mode	ITEM CODE No.	Setting Function	Default
Push switch on outdoor unit PCB Function mode [F3]	Forced operation	00	Cooling test run		Forced thermostat-ON in Cooling	
		01	Heating test run		Forced thermostat-ON in Heating	
		02	Test run stop		Test run is stopped	
		03,04	(Forbidden)			
	Install and maintenance 1	10	Signal amplifier automatic address		Automatic address setting operates for signal amplifier	
		11	Indoor unit automatic address		Automatic address setting operates for indoor unit of same refrigerant circuit	
	Install and maintenance 2	21	Vacuuming mode		Vacuuming mode operates Refer to page 01-01 for the function	
		22	RB unit automatic address		Automatic address setting operates for RB unit of same refrigerant circuit	
	Clear	30	Error history clear		All the abnormal code histories are cleared	
		31	(Forbidden)			
		32	Current time clear		Accumulated current time becomes [0]	
		33	INV compressor accumulated time clear		Accumulated time of the INV compressor becomes [0]	
		35	Field setting all clear		Return to default the all set items	
	Abnormal	40	*Abnormal reset		It was displayed when abnormality occurs, and abnormal code is reset This is a function that uses to clear abnormal display after the repair is completed Please operate the switch after power off or power on the outdoor unit	
		41	Maximum memorized indoor unit number reset		Maximum memorized indoor units number is reset “E14.5:Indoor units number shortage”error is cleared	
	Specialty function	91	Foreced Central control function forced release		When the centralized control device failure, and the centralized control setting cannot be released, this function is used All the limitations set with the centralized control device are released	

		ITEM CODE No.	Meaning of Error History Number	Information contents
Push switch on outdoor unit PCB Error History Mode [F9]	Error history	00	1 time ago (Newest)	When the error occurred, the error code is memorized up to 10 on Main PCB.
		01	2 times ago	
		02	3 times ago	If the memorized error code becomes over 10, the oldest one will be erased.
		03	4 times ago	
		04	5 times ago	
		05	6 times ago	
		06	7 times ago	
		07	8 times ago	
		08	9 times ago	
		09	10 times ago (Oldest)	

Refer to Chapter TROUBLE SHOOTING

Error Code List of Outdoor unit

<< Error code which manual error release will be required >>

A5.1 Low pressure abnormal
84.1 Current sensor 1 error
93.1 Inverter compressor start up error
94.1 Trip detection
A1.1 Discharge temperature 1 abnormal
A3.1 Compressor 1 temperature abnormal
97.1 Outdoor unit fan motor lock error
97.5 Fan motor temperature abnormal
97.9 Fan motor driver abnormal
68.2 Rush current limiting resister temp rise protection
95.5 Compressor motor loss of synchronization
A6.3 Outdoor heat exchanger 1 gas temperature abnormal
A6.4 Outdoor heat exchanger 2 gas temperature abnormal

1-7 Field Setting / Function Setting for Indoor unit

	Classification	ITEM CODE No.	Setting Mode	ITEM CODE No.	Setting Function	Default
Indoor unit field setting setting by remote controller	Address	01	Indoor unit address	00~63	00~63	00
		02	Refrigerant circuit address	00~99	00~99	00
	Filter	11	Filter indicator Interval	00	Default	○
				01	Longer	
				02	Shorter	
		13	Filter sign display	00	Enable	○
				01	Disable	
				02	Display only on central remote control	
	Airflow	20	Ceiling airflow (Cassette type only)	00	Default	○
				01	High ceiling	
		23	Vertical airflow direction	00	Default	○
				01	Raise	
		24	Horizontal swing airflow direction	00	Default	○
				01	Left half	
				02	Right half	
		26	Static Pressure setting - Low Static Pressure Duct (Mini Duct) Only - The Range of static pressure is different from one model to other.	00	0 Pa	
				01	10 Pa	
				02	20 Pa	
				03	30 Pa	
				04	40 Pa	
				05	50 Pa	
				31	ARXK004/007/009/012 : 10 Pa (Standard)	○
				31	ARXK014/018/024 : 15 Pa (Standard)	○
			Static Pressure setting - Low Static Pressure Duct (Slim Duct) Only - The Range of static pressure is different from one model to other.	00	0 Pa	
				01	10 Pa	
				02	20 Pa	
				03	30 Pa	
				04	40 Pa	
				05	50 Pa	
				06	60 Pa	
				07	70 Pa	
				08	80 Pa	
				09	90 Pa	
				31	25 Pa (Standard)	○
			Static Pressure setting - Medium Static Pressure Duct Only - The Range of static pressure is different from one model to other.	00	0 Pa	
				01	10 Pa	
				02	20 Pa	
				03	30 Pa	
				04	40 Pa	
				05	50 Pa	
				06	60 Pa	
				07	70 Pa	
				08	80 Pa	
				09	90 Pa	
				10	100 Pa	
				11	110 Pa	
				12	120 Pa	
				13	130 Pa	
				14	140 Pa	
				31	ARXA024 : 40 Pa (Standard)	○
				31	ARXA030/036 : 50 Pa (Standard)	○
				31	ARXA045 : 60 Pa (Standard)	○
			Static Pressure setting - Medium Static Pressure Duct (High Efficiency) Only - The Range of static pressure is different from one model to other.	05	50 Pa	
				06	60 Pa	
				07	70 Pa	
				08	80 Pa	
				09	90 Pa	
				10	100 Pa	
				11	110 Pa	
				12	120 Pa	
				13	130 Pa	
				14	140 Pa	
				31	50 Pa (Standard)	○

Model name	Range of static pressure
ARXK004/007/009/012	0 to 30 Pa
ARXK014/018/024	0 to 50 Pa

Model name	Range of static pressure
ARXD007/009/012	0 to 90 Pa
ARXD014/018	
ARXD024	0 to 50 Pa

Model name	Range of static pressure
ARXA024/030	0 to 140 Pa
ARXA036	0 to 120 Pa
ARXA045	0 to 110 Pa

Model name	Range of static pressure
ARXQ018	50 to 100 Pa
ARXQ024	50 to 150 Pa

	Classification	ITEM CODE No.	Setting Mode	ITEM CODE No.	Setting Function	Default
Indoor unit field setting setting by remote controller	Airflow	26	Static Pressure setting - High Static Pressure Duct Only - The Range of static pressure is different from one model to other.	02	20 Pa	
				03	30 Pa	
				04	40 Pa	
				05	50 Pa	
				06	60 Pa	
				07	70 Pa	
				08	80 Pa	
				09	90 Pa	
				10	100 Pa	
				11	110 Pa	
				12	120 Pa	
				13	130 Pa	
				14	140 Pa	
				15	150 Pa	
				16	160 Pa	
				17	170 Pa	
				18	180 Pa	
				19	190 Pa	
				20	200 Pa	
				21	210 Pa	
				22	220 Pa	
				23	230 Pa	
				24	240 Pa	
				25	250 Pa	
				26	260 Pa	
				27	270 Pa	
				28	280 Pa	
				29	290 Pa	
				31	ARXC036 : 100 Pa (Standard)	○
				31	ARXC072/090/096 : 150 Pa (Standard)	○
			Static Pressure setting - High Static Pressure Duct (High Efficiency) Only -	05	50 Pa	
				06	60 Pa	
				07	70 Pa	
				08	80 Pa	
				09	90 Pa	
				10	100 Pa	
				11	110 Pa	
				12	120 Pa	
				13	130 Pa	
				14	140 Pa	
				15	150 Pa	
				16	160 Pa	
				17	170 Pa	
				18	180 Pa	
				19	190 Pa	
				20	200 Pa	
				21	210 Pa	
				22	220 Pa	
				23	230 Pa	
				24	240 Pa	
				25	250 Pa	
				31	50 Pa (Standard)	○
	Correction	30	Cool air temperature trigger	00	Default (0°C)	○
				01	Temperature overshoot setting (+2°C)	
				02	Temperature undershoot setting (-2°C)	
		31	Heat air temperature trigger	00	Default (0°C)	○
				01	Temperature undershoot setting (-6°C)	
				02	Temperature slightly undershoot setting (-4°C)	
				03	Temperature overshoot setting (+4°C)	
		32	Temperature correction in Auto	00	Disable	○
				01	Enable (Nonfunctional on J2 Series)	
	Change of Function 1	40	Auto restart *1	00	Enable	
				01	Disable	○
		43	Cool air prevention	00	Super low	○
				01	Follow the setting on the remote controller	
		46	External control	00	Start / Stop	○
				01	Emergency stop	
				02	Foreced stop (Start/Stop by RC is restricted)	
		47	Error report target	00	All	○
				01	Display only for central remote control	
		49	FAN Setting when cooling thermo-stat OFF *2	00	Follow the setting on the remote controller	○
				01	Foreced stop	

Model name	Range of static pressure
ARXC036	20 to 160 Pa
ARXC072	40 to 270 Pa
ARX090	50 to 240 Pa
ARX096	50 to 290 Pa

*1: Auto restart is an emargency function such as for power failure etc.
Do not start and stop the indoor unit by this function in normal operation.
Be sure to operate by the control unit, converter or external input device.
*2: Fan Setting when cooling thermostat OFF, Connection of the wired remote controller (2-wire type or 3-wire type) and switching its thermistor are necessary.

1-8 Field Setting / Function Setting for Outdoor air unit

	Classification	ITEM CODE No.	Setting Mode	ITEM CODE No.	Setting Function	Default
Indoor unit field setting setting by remote controller	Address	01	Indoor unit address	00~63	00~63	00
		02	Refrigerant circuit address	00~99	00~99	00
	Filter	11	Filter indicator Interval	00	Default	○
				01	Longer	
				02	Shorter	
		13	Filter sign display	00	Enable	
				01	Disable	○
				02	Display only on central remote control	
	Airflow	26	Static Pressure setting - Outdoor air unit Only - The Range of static pressure is different from one model to other.	05	SP mode 05	
				06	SP mode 06	
				07	SP mode 07	
				08	SP mode 08	
				09	SP mode 09	
				10	SP mode 10	
				11	SP mode 11	
				12	SP mode 12	
				13	SP mode 13	
				14	SP mode 14	
				15	SP mode 15	
				16	SP mode 16	
				17	SP mode 17	
				18	SP mode 18	
				19	SP mode 19	
				20	SP mode 20	
				21	SP mode 21	
				22	SP mode 22	
				31	Normal SP	○
	Change of Function 1	40	Auto restart *1	00	Enable	
				01	Disable	○
		43	Cool air prevention	00	Super low	
				01	Follow the setting on the remote controller	○
		46	External control	00	Start / Stop	○
				01	Emergency stop	
				02	Foreced stop (Start/Stop by RC is restricted)	
		47	Error report target	00	All	○
				01	Display only for central remote control	
		63	Humidifier control *2	00	mode 00	○
				01	mode 01	
				02	mode 02	

Model name	Range of static pressure	Normal static pressure
ARXH054GTAH ARQH140GTAH	SP mode 05 to 19 (50 to 185 Pa)	185 Pa
ARXH072GTAH ARQH224GTAH	SP mode 05 to 20 (50 to 200 Pa)	200 Pa
ARXH096GTAH ARQH280GTAH	SP mode 05 to 22 (50 to 220 Pa)	200 Pa

*1: Auto restart is an emargency function such as for power failure etc.
Do not start and stop the indoor unit by this function in normal operation.
Be sure to operate by the control unit, converter or external input device.

*2: Select control conditions of external output.
"Mode 00" is output when heating thermostat is ON, "Mode 01" is output in heating operation, "Mode 02" is output in heating operation and in fan operation.

Refrigerant R410A INVERTER

AIRSTAGE™ VR-IV

Variable Refrigerant Flow System

2. OUTDOOR UNIT OPERATION CONTROL

2. OUTDOOR UNIT

2-1 REFRIGERANT CIRCUIT

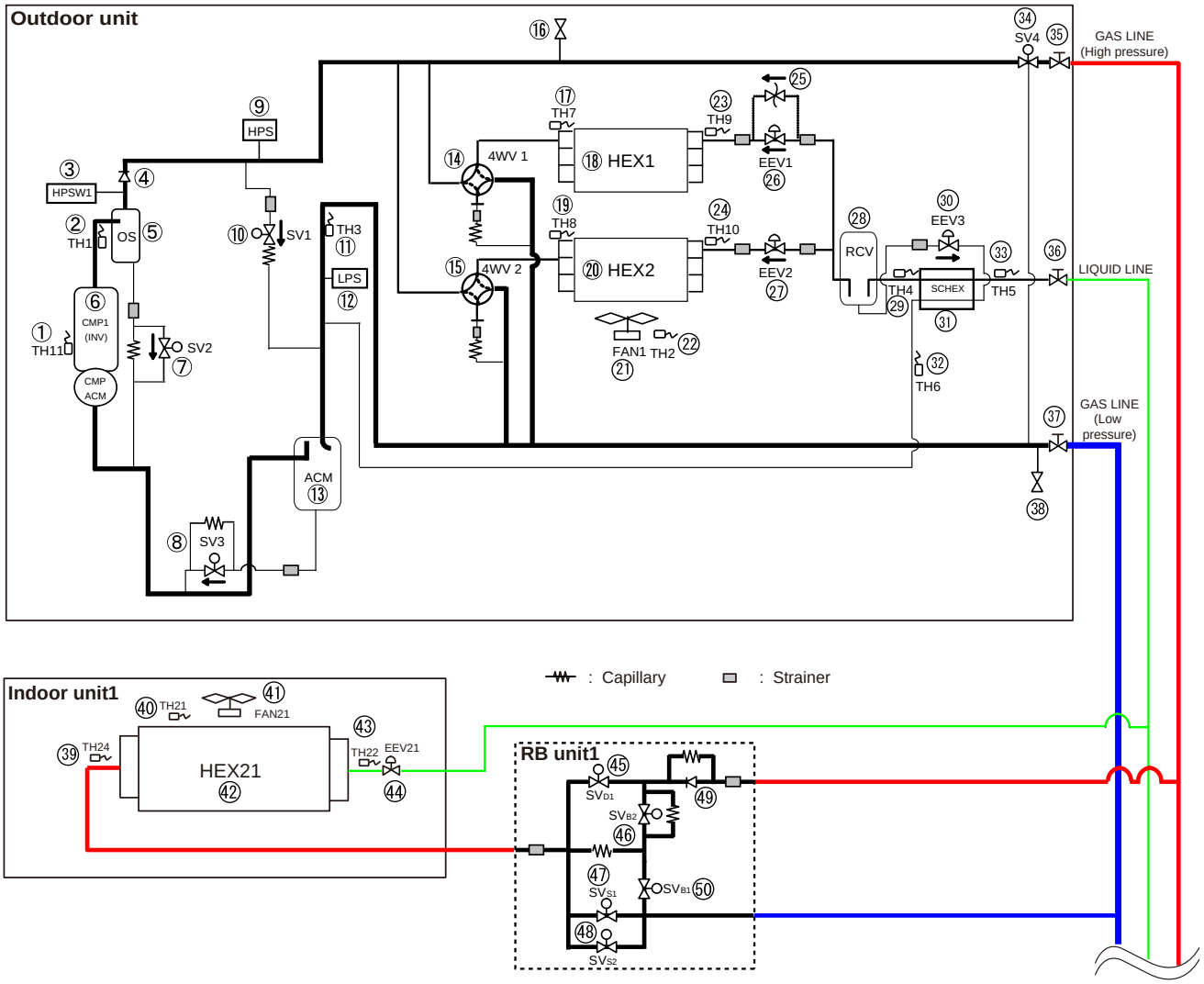

No.	Part name	Function	No.	Part name	Function
1	Compressor temp. Sensor 1	Detects the compressor temperature	26	Outdoor unit EEV1	Controls the flow of ref. based on target pressure
2	Discharge temp. Sensor 1	Detects the discharge temperature	27	Outdoor unit EEV2	Controls the flow of ref. based on target pressure
3	High pressure Swithch	Detects abnormal high pressure (4.20 MPa)	28	Receiver tank	Storage extra refrigerant
4	Check valve	Comp. pressure equaization	29	Liquid pipe temp. Sensor 1	Detects the temperature of liquid refrigerant
5	Oil Separator	Separates oil and refrigerant	30	Outdoor unit EEV3	Controls ref. subcooling /Operats in protection
6	Compressor (Inverter)	Operation range (20 rps - 90 rps)	31	Sub-Cool Heat exchanger	Subcool of liquid refrigerant
7	Bypass / Oil return Valve	HP-LP bypass in protection, Returns the oil to COMP	32	Sub-Cool HEX gas outlet temp Sensor	Detects the temperature of refrigerant
8	Oil return Valve	Returns the oil to Compressor	33	Liquid pipe temp. Sensor 2	Detects the temperature of liquid refrigerant
9	High pressure Sensor	Detects the High pressure	34	High pressure gas cut valve	Shut off High pressure gas line in all Cooling mode
10	Bypass Valve	HP-LP bypass in protection / Comp. pressure equalization	35	3way-valve (High pressure Gas)	Open / Close for High pressure Gas line
11	Suction gas temp. Sensor	Detects the temp of refrigerant	36	3way-valve (Liquid)	Open / Close for Liquid line
12	Low pressure Sensor	Detects Low pressure	37	3way-valve (Low pressure Gas)	Open / Close for Low pressure Gas line
13	Acuumulator	Collects refrigerant and the returned oil	38	Service port	Measure Low pressure for Service
14	4-Way-Valve 1	Changes operation mode of HEX 1	39	I.U HEX outlet temp. Sensor	Detects the temperature of refrigerant
15	4-Way-Valve 2	Changes operation mode of HEX 2	40	Room temp. Sensor	Detects the temperature of room
16	Service port	Measure High pressure for Service	41	Indoor unit FAN (Motor)	Controlled by setting / protection / Thermo OFF
17	Heat-Ex 1 gas temp. Sensor	Detects the temperature of refrigerant	42	I.U Heat Exchanger	Operates as Condensor / Evapolator
18	Heat Exchanger 1	Operates as Condenser / Evaporator	43	I.U HEX inlet temp. Sensor	Detects the temperature of refrigerant
19	Heat-Ex 2 gas temp. Sensor	Detects the temperature of refrigerant	44	Indoor unit EEV	Controlled by setting / protection / Thermo OFF
20	Heat Exchanger 2	Operates as Condenser / Evaporator	45	SVD1 (Discharge)	Opens in Heat / Vacuum mode
21	Outdoor unit FAN (Motor)	Control FAN speed for heat exchange of HEX	46	SVB2 (Pressurization)	Opens in Heat / Vacuum mode
22	Outdoor temp. Sensor	Detects the ambient temperature	47	SVS1 (Suction 1)	Opens in Cool / Dry / Defrost / Oil-Recovery / Vacuum
23	Heat-Ex 1 liquid temp. Sensor	Detects the temperature of refrigerant	48	SVS2 (Suction 2)	Opens in Cool / Dry / Defrost / Oil-Recovery / Vacuum
24	Heat-Ex 2 liquid temp. Sensor	Detects the temperature of refrigerant	49	Check valve	Shut off opposit refrigerant flow
25	Pressure regulation valve	Operates in regulated pressure (4.00MPa)	50	SVB1 (Decompression)	Opens in Stop / FAN / same as the function of SVS

2-1-1 REFRIGERANT CIRCUIT for Outdoor air unit

Outdoor air unit
(ARXH054/ 096GTAH, ARQH140/ 280GTAH)

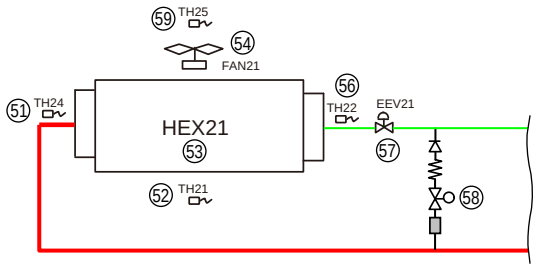

Outdoor air unit
(ARXH072GTAH, ARQH224GTAH)

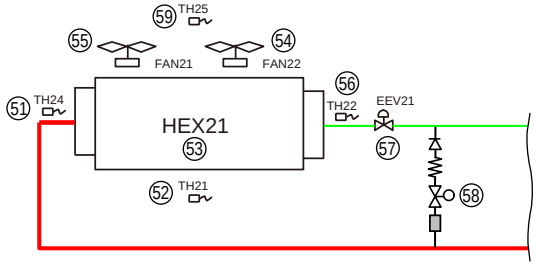

: Capillary : Strainer

No.	Part name	Function
51	Heat exchanger outlet thermistor	Detects the temperature of refrigerant
52	Suction airflow temp. thermistor	Detects the temperature of suction airflow
53	Heat exchanger	Operates as Condensor / Evapolator
54	Fan motor	Controlled by setting / protection / Thermo OFF
55	Fan motor	Controlled by setting / protection / Thermo OFF
56	Heat exchanger inlet thermistor	Detects the temperature of refrigerant
57	Electric expansion valve	Controlled by setting / protection / Thermo OFF
58	Solenoid valve (Bypass)	Opens at Thermo OFF in Heating mode
59	Discharge airflow temp. thermistor	Detects the temperature of discharge airflow

2-2 INPUT / OUTPUT LIST

		Input / output or kind of detail	Control range
INPUT	High pressure sensor	Pressure sensor	Measure range 0.0 to 5.0MPa
	Low pressure sensor	Pressure sensor	Measure range 0.0 to 1.7MPa
	Discharge temperature sensor 1	Themistor	Measure range 10 to 130℃
	Outdoor temperature sensor	Themistor	Measure range -30 to 58℃
	Suction gas temperature sensor	Themistor	Measure range -35 to 70℃
	Liquid pipe temperature sensor 1	Themistor	Measure range -35 to 70℃
	Liquid pipe temperature sensor 2	Themistor	Measure range -35 to 70℃
	Sub-cool heat exchanger gas outlet temp.sensor	Themistor	Measure range -35 to 70℃
	Heat exchanger 1 gas temp. sensor	Themistor	Measure range -35 to 70℃
	Heat exchanger 2 gas temp sensor	Themistor	Measure range -35 to 70℃
	Heat exchanger 1 liquid temp. sensor	Themistor	Measure range -35 to 70℃
	Heat exchanger 2 liquid temp. sensor	Themistor	Measure range -35 to 70℃
	Compressor temperature sensor 1	Themistor	Measure range 10 to 130℃
	Operation current sensor	Current transformer	
	High pressure switch 1	Pressure switch	Open 4.2MPa Short 3.2MPa
	Rotary SW & DIP-SW & Push SW	Address and function setting	
OUTPUT	Compressor 1 (Inverter)	Magnetic relay	Operation coil AC230V, 50Hz
	Electric expansion valve 1 (HEX1)	EEV coil	Operating voltage DC12V
	Electric expansion valve 2 (HEX2)	EEV coil	Operating voltage DC12V
	Electric expansion valve 3 (SC - HEX)	EEV coil	Operating voltage DC12V
	Fan motor	DC Brushless motor	
	4-way valve 1 (HEX1)	4-way valve coil	AC230V, 50Hz 6/5 W
	4-way valve 2 (HEX2)	4-way valve coil	AC230V, 50Hz 6/5 W
	Solenoid valve 1	Hot gas bypass	AC230V, 50Hz, 8W
	Solenoid valve 2	Comp. pressure equalization valve	AC230V, 50Hz, 6W
	Solenoid valve 3	ACM oil return valve1	AC230V, 50Hz, 6W
	Solenoid valve 4	High pressure gas cut off valve	AC230V, 50Hz 6/5 W
	Crank case heater 1	For Compressor (Lower)	AC230V, 35W
	Crank case heater 2	For Compressor (Upper)	AC230V, 35W
	Base heater	Field supply	AC230V(For rated 415V Power supply) The allowable current is 1A or less
Communication Input / Output	LON WORKS	Indoor unit ←→ Outdoor unit	
	Inverter communication		
	Outdoor unit communication	Outdoor unit ←→ Outdoor unit	
External Input / Output	External input 1 (CN131) (Low noise mode operation)	Non-voltage contact input	
	External input 3 (CN133) (Outdoor unit operation peak control)		
	External input 4 (CN134) (Emergency stop operation)		
	Electricty meter puls input (CN135)		
	External output 1 (CN136) (Error display)	ON (Error) / OFF (Normal)	Control output: DC 0/12-24V, Max.30mA
	External output 2 (CN137) (Operation display)	ON (Operation) / OFF (Stop)	Control output: DC 0/12-24V, Max.30mA
LED display	Single LED 101 Single LED 102 7 Segment LED	Display the information on operation, error and setting with single LED and 7 segment LED.	

2-3 Heat Recovery Operation controlling

2-3-1 Operation mode selection and controlling

Under Heat Recovery operation, the heat balance for the system is controlled based on the Target High pressure and the Target low pressure. By changing compressor rotation speed or changing Heat exchange capacity, the system can maintain the good heat balance.
The target High pressure value and the target low pressure value in the target range are decided by the outdoor unit's operation mode (Condensor or Evaporator).

The outdoor unit's operation mode is decided by depending on the operation order from the connecting indoor unit at the first start up.
- Indoor unit's cooling demand is bigger than heating demand: Outdoor unit operates as Condensor
- Indoor unit's heating demand is bigger than cooling demand: Outdoor unit operates as Evaporator

After the mode was decided at the start up, the operation mode of outdoor unit will be selected by based on the target pressure.

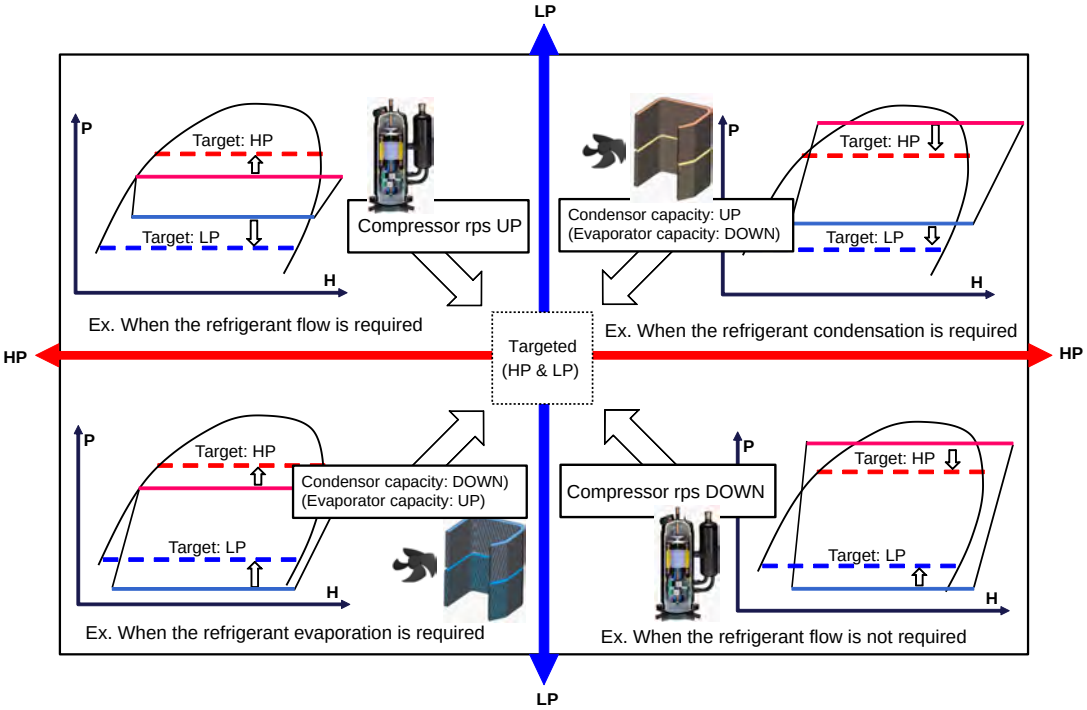

2-4 COMPRESSOR OPERATION

2-4-1 Operation / Stop Condition

When cooling requirement capacity or heating requirement capacity from either of the indoor units in the same refrigerant circuit is input, the compressor operates.
When all the indoor units in no "cooling requirement capacity" or "heating requirement capacity", the compressor is stopped.
But in the following case, the compressor operates in accordance with operation of each mode.

- During 3 minute restart prevention operation
- Icing protection
- Failure (Refer to chapter 4, TROUBLE SHOOTING)
- Oil recovery
- Under expansion valve initialization
- At protective operation
- Emergency stop
- Defrost operation
- Peak cut stop operation

2-4-2 Compressor speed control

(1) Speed range and controlling

- On operation range: 20 - 115 rps*
- Changing interval: 60 sec.
- When the multi connection outdoor unit has the same type of compressor, all of compressors rotational speed are controlled with the same speed at the normal operating condition.
- All of the outdoor unit compressors must start at the start-up process.

- The Normal start process (Except the condition of Cold start)
  The first target speed is decided by indoor unit capacity demand.
  The upper limit speed at starting is made 60 rps and is raised in 30 rps to 90 rps after 60 seconds.
  (The upper speed limit depends on the operating high pressure value)

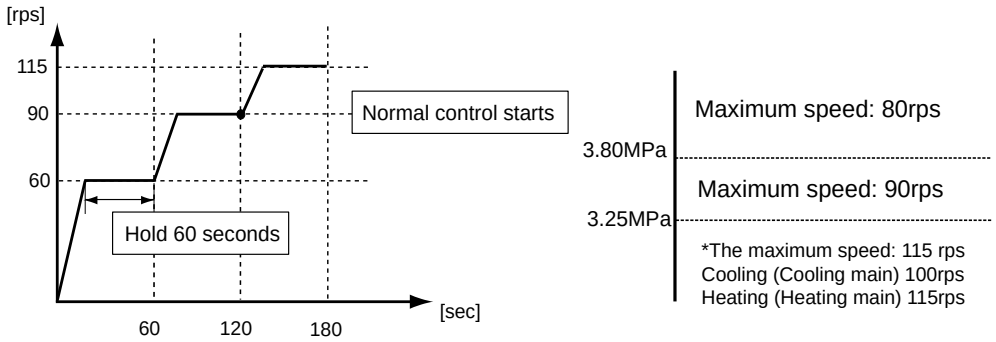

- The lower limit speed at start-up changes depending on the outdoor temperature

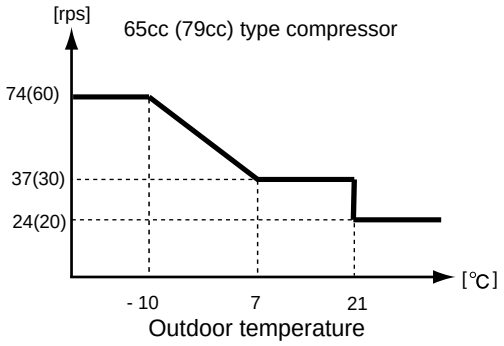

- Cold Start start process
  Condition: Outdoor temperature below 21 ℃ and the system stopped for more than 1 hour]
  Control HP*: Change the rps so that high pressure does not reach to protection condition

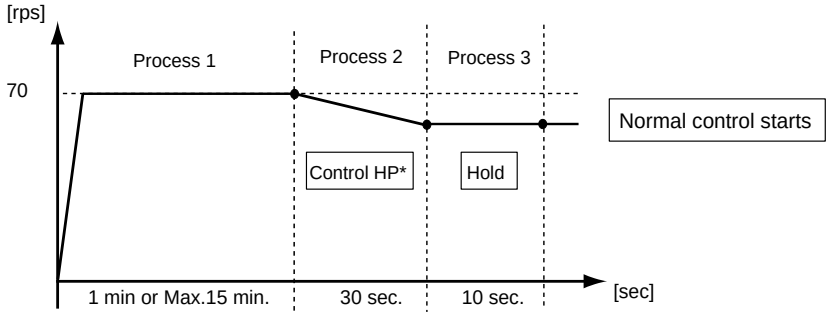

2-4-3 Capacity Control

(1) Capacity of compressor operation

The inverter compressor is able to control the amount of required refrigerant circulation in details.

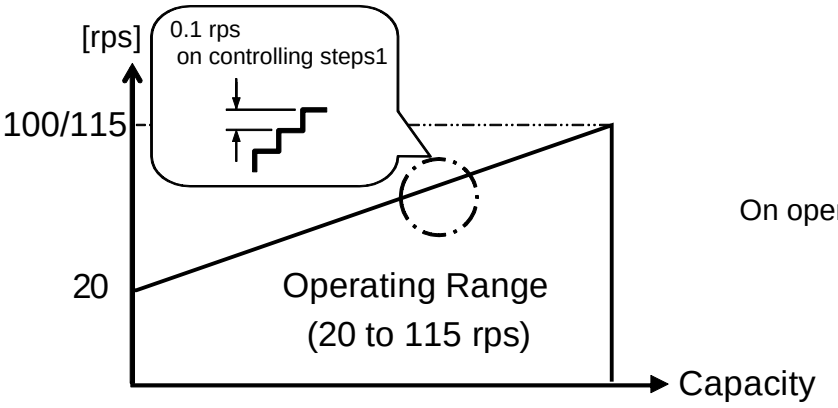

On operating range: 20 to 115 rps

Cooling (Cooling main) 100rps
Heating (Heating main) 115rps

By combining the operation of inverter compressors, the amount of required refrigerant circulation acceding to cooling and heating load can be supplied from compressor efficiently.

Ex) Combnation of 65cc compressor / Heating (Heating main)

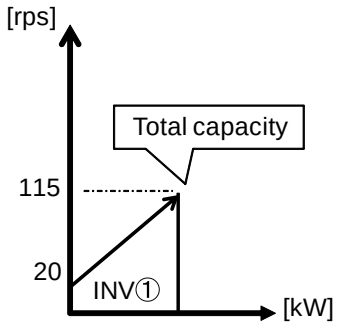

Stand-alone

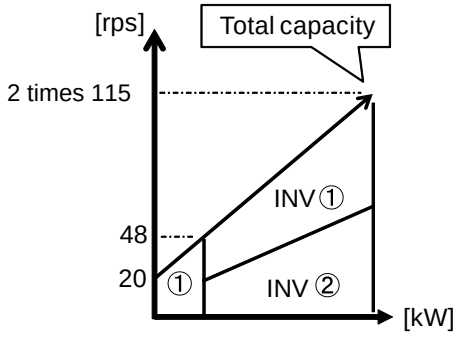

2 Outdoor units

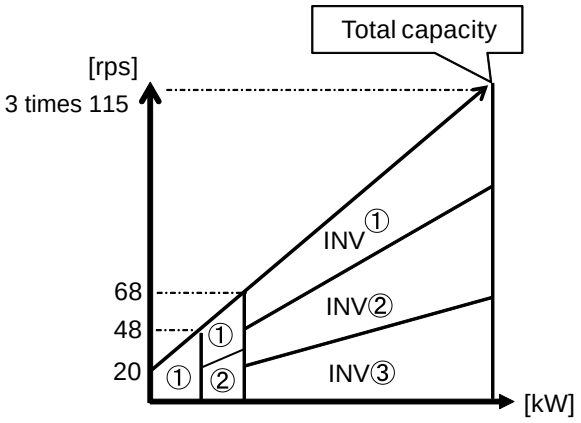

3 Outdoor units

(2) Target low-pressure and high-pressure control

<Cooling>

In order to make the evaporation pressure of the indoor unit at the proper pressure on a variety of operations, capacity of the compressor will be controlled by low-pressure sensor.

<Heating>

In order to make the condensation pressure of the indoor unit at the proper pressure on a variety of operations, capacity of the compressor will be controlled by high-pressure sensor.

<Cooling main / Heating main>

In order to keep evaporation pressure / condensation pressure of the indoor unit at the proper pressure on a variety of operations, capacity of the compressor and the capacity Heat exchange(incl. fan controll) will be controlled by both of pressure sensor at the sametime

Target low-pressure and high pressure temperature depends on system capacity, capacity of compressor operation, pipe length, and capacity shift switch settings.

2-4-4 Compressor Sequence Operation

Make starting sequence and start and stop of the compressors in accordance with the below sequence.

Starting sequence condition
Example)

Starting sequence ① : Compressor started first, compressor stopped last
Starting sequence ② : Compressor started 2nd, compressor stopped 2nd from the end
Starting sequence ③ : Compressor started 3nd, compressor stopped 3nd from the end

Rotate the stating sequence under the following conditions:

(1) Defrosting
(2) Oil recovery
(3) When cooling discharge temperature is high
(4) After stopping from Heating operation / Heating main operation

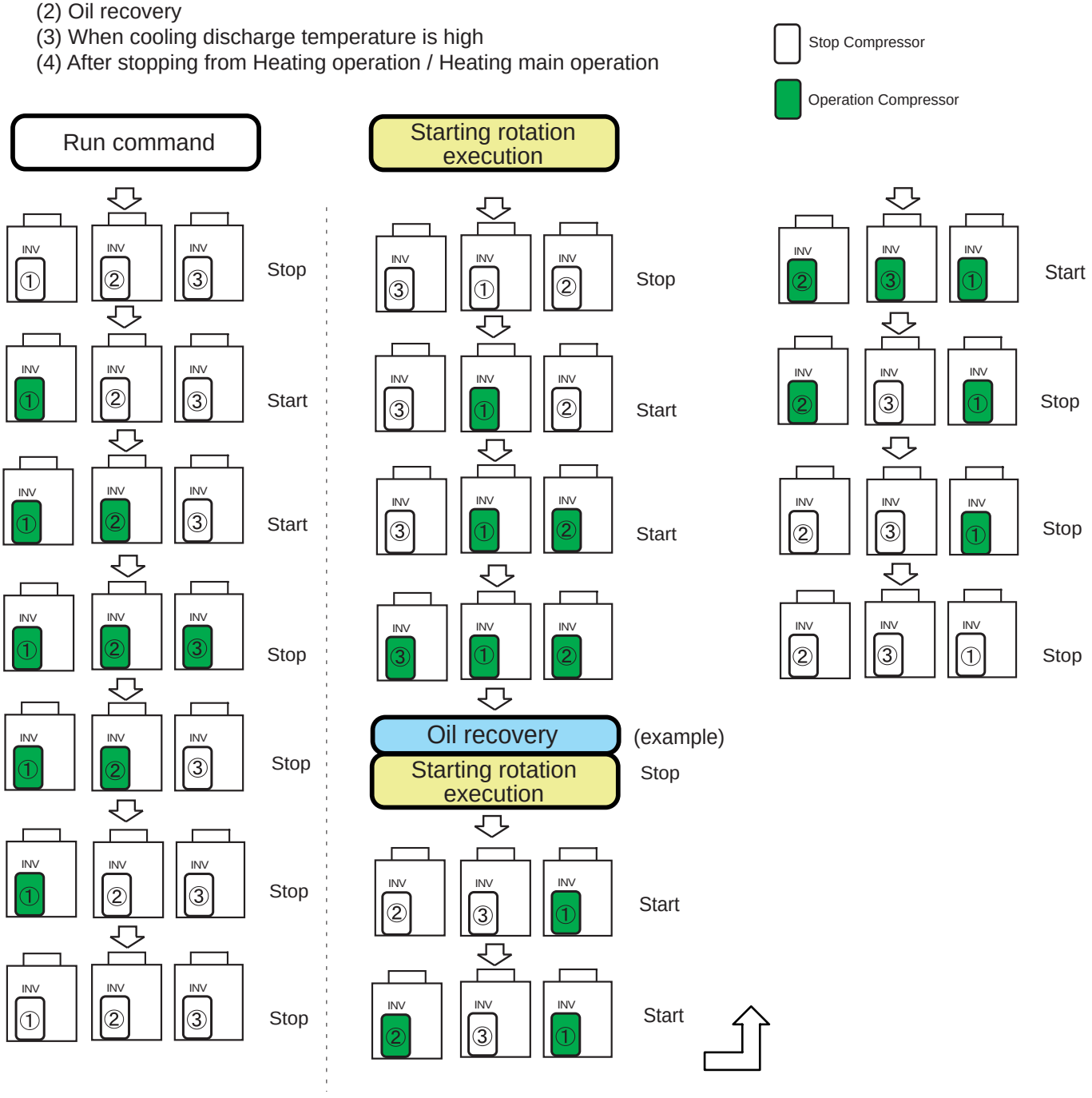

2-5 HEAT EXCHANGER CAPACITY CONTROL

2-5-1 Operation mode selection and controlling

Under The heat exchanger capacity is controlled using the 4WV, fan, and EEV according to the target high and low pressures.
The method for changing the capacity of the heat exchanger differs depending on the operation mode.

System demand	Heat-Ex conditions	Controling device	Control target
Cooling	Condensor	Fan Motor + 4WV (ON/OFF) +EEV	Target High pressure
Heating	Evaporator	Fan Motor (Max rpm) + 4WV (ON) +EEV	Maximum control
Cooling main	Condensor	Fan Motor + 4WV (ON/OFF) + EEV	Target High / Low pressure
Heating main	Evaporator	Fan Motor + 4WV (ON) + EEV	Target High / Low pressure

2-5-2 Capacity control

The heat exchanger is operated at maximum efficiency by using each outdoor unit. (Max. 6 Heat exchanger can be used)

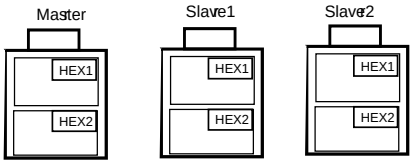

(1) Cooling (In case of 3 outdoor units connection)
Heat Exchanger condition: Condensor
- 4WV ON / OFF (Dpending on HEX capacity shift)

Fan speed Controlling range
- 0 to 500 rpm Only one HEX in use
- 300 to 500 rpm During HEX capacity shift
- Over 500 rpm Full of Heat-Ex capacity

Heat Exchanger capacity shift controlling
- Increas: Upper HEX has a priority in usage condition.
(No available Upper HEX, Lower HEX use)
- Decrease: Lower HEX has a priority in stop condition.

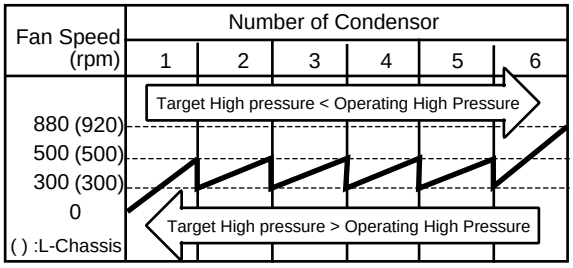

(2) Heating
Heat Exchanger condition: Evaporator
- 4WV ON state

Fan speed Controlling range
- Maximum speed

Heat Exchanger capacity shift controlling
- Use all of available HEXs (Maximum capacity)

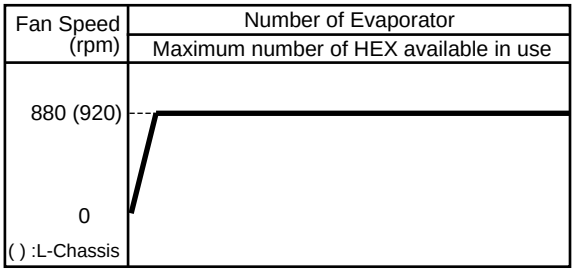

(3) Cooling Main / Heating Main (In case of 3 outdoor units connection)
Heat Exchanger condition: Depending on the difference between operating pressure and the Target High pressure and the Target Low pressure.

Fan speed controlling: Depending on the condition of HEX (Condensor / Evaporator)

Heat Exchanger capacity shift controlling:
- Increas: Upper HEX has a priority in usage condition.
(No available Upper HEX, Lower HEX use)
- Decrease: Lower HEX has a priority in stop condition.

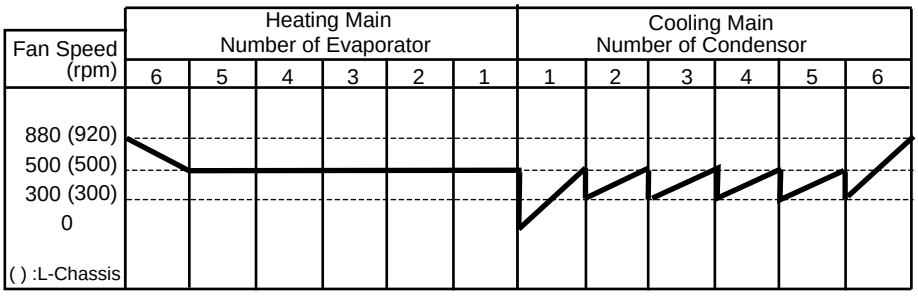

2-6 FAN CONTROL

2-6-1 Cooling / Cooling Main Operation

The outdoor fan speed at start up is 300 rpm

Fan step	Fan speed (rpm)	
	S-Chassis	L-Chassis
16	880	920
15	860	870
14	810	820
13	720	720
12	620	620
11	500	500
10	420	420
9	360	360
8	320	320
7	300	300
6	intermittent 6	intermittent 6
5	intermittent 5	intermittent 5
4	intermittent 4	intermittent 4
3	intermittent 3	intermittent 3
2	intermittent 2	intermittent 2
1	intermittent 1	intermittent 1
0	0	0

<< Ex. Cooling operaion >>

The fan speed is controlled to keep high pressure saturation temperature within the target range as follows
The high-pressure is monitoring at a set time interval and the fan speed is changed by the following conditions.

(Conditions which raise the fan speed)
High-pressure saturation ＞upper limit of target high-pressure saturation or heat sink temperature ≧ S Chassis : 84°C, L Chassis : 83°C

(Conditions which lower the fan speed)
High-pressure saturation＜low limit of target high-pressure saturation range and heat sink temperature ≦75°C

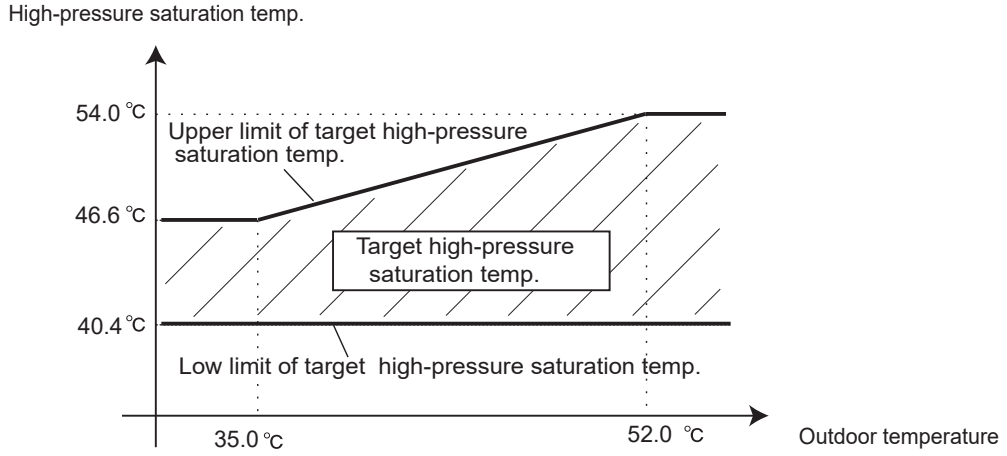

Intermittent fan mode

When switched from normal fan step to intermittent fan step, always start from 300rpm/7sec.
When there was a change during intermittent step 1-6, switching is performed at the time the current speed duration time reaches time-up.

Fan step	Fan mode	Fan speed 0 rpm duration time T (sec)	Fan speed 300 rpm duration time (sec)
6	intermittent 6	40	7
5	intermittent 5	33	
4	intermittent 4	26	
3	intermittent 3	19	
2	intermittent 2	12	
1	intermittent 1	6	

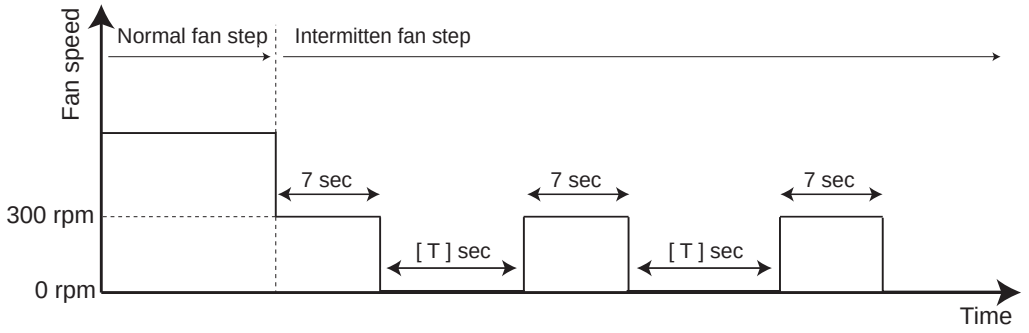

2-6-2 Heating / Heating main Operation

(1) Heating Operation

The fan speed during all heating is constant with **Fan step 16*** regardless of the outdoor air temperature.

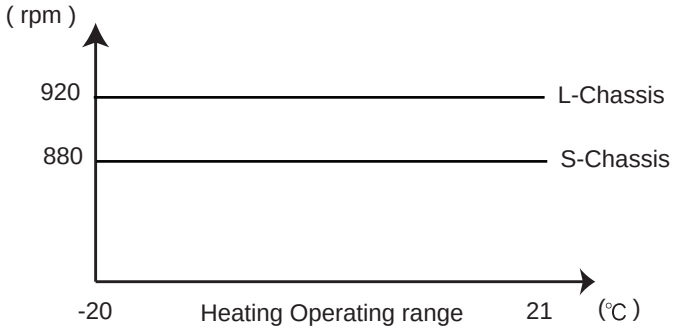

Fan step	Fan speed (rpm)	
	S-Chassis	L-Chassis
16*	880	920
15	860	870
14	810	820
13	720	720
12	620	620
11	500	500

(2) Heating main Operation

Operate at 500 rpm until all the heat exchangers are used up.
Then adjust the rpm up or down in accordance with the load.

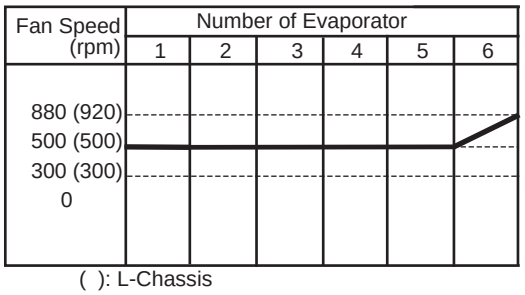

( ): L-Chassis

2-7 EXPANSION VALVE CONTROL

The EEV controls the flow of refrigerant

	Operation mode	Contrl and detection	Control range	
			operation range	stop
EEV 1 EEV 2	Cooling Cooling Main	- Liquid Pressue control (TH4) - HEX balance (TH9,TH10) "TH9 ≒ TH10"	52- 480 pulses	0 pulses
	Heating Heating Main	- SH control (TH7,TH8 - LPS) "Target SH: 4℃ " - Protection (TH1) (LPS)	11 - 480 pulses	0 pulses
EEV 3	Cooling Cooling Main	- SH control (TH6, - LPS) "Target SH: 4℃ " - Protection (TH1)	0- 500 pulses	0 pulses
	Heating Heating Main			

Initialization conditions: - When power turned On. - When operation stopped.

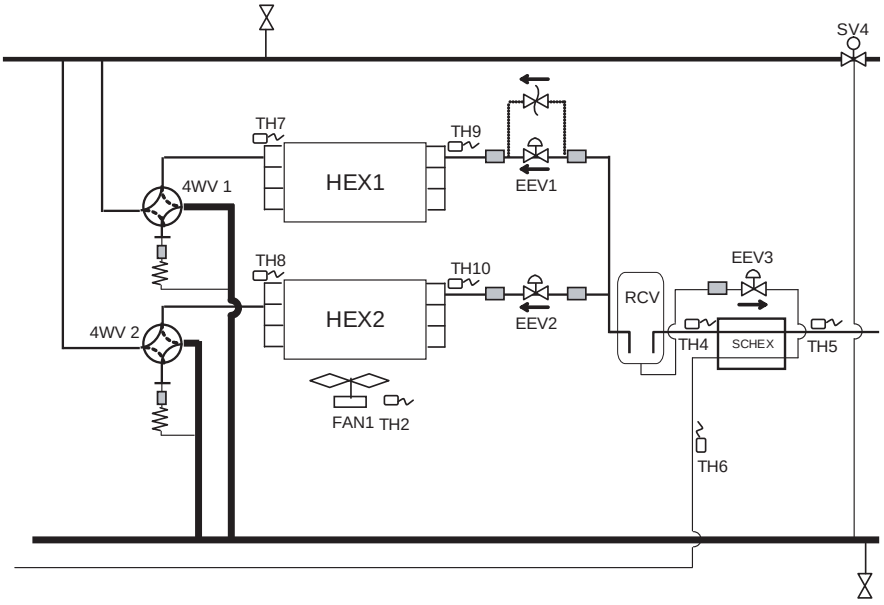

2-8 SPECIAL OPERATION

2-8-1 Oil Recovery Operation

(1) Purpose of the operation

The amount of refrigerant lubricant oil which has been transported to the indoor units and the connection pipe with the refrigerant will become large as the operation time of compressor increases. It is necessary to recover the oil back into the outdoor unit for a certain time interval in order to prevent compressors from damaging due to lack of lubrication oil.

< Start condition >

Compressor accumulated operation time since last oil recovery operation exceeds 3 hours (first time: 1 hour.)

< End condition >

3 minutes have elapsed since the compressor restart and Suction superheat "Suction temperature - Lowpressure saturaion temperature" ≦ 5 ℃ at all Outdoor units

Or

6 minutes have elapsed since the start

< Operation >

Actuator	Preparation process	On Oil recovery operatiom	Finishing process
Compressor	All compressor operation Stop	All compressor start	All compressor operation Stop
Heat Ex(4WV)	Keeps the operation mode	Condensor (OFF)	Keeps the operation mode
FAN	Stops	Start (Target high pressure control)	Stops
Heat Ex EEV	0 pls	480pls	0 pls
SV1,SV2	Open	Close	Open

Others

During the oil recovery operation, appears on the display of wired and central remote controller, and appears on the simple remote controller.
The operation indicators (Green LED) of the indoor units flash slowly.

2-8-2 Pre-heat Operation

This pre-heat operation protects the start up failure by preventing the refrigerant from soaking into the oil in compressor.

2 pcs of belt heater installed on the compressor
The crankcase heaters are controlled by the outdoor temperature
< Control condition >

Crankcase heater ON: 30 minutes elapsed since installed compressors stopped (However, ON when power turned on)
OFF: Installed compressors operation

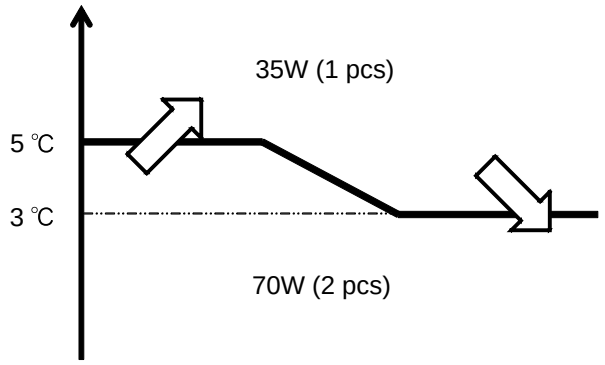

2-8-3 Defrost Operation Control

< Defrosting start condition >

Accumulated heating operation time is 40 minutes or longer
(Accumulated heating operation time is reset at the end of cooling operation or defrosting operation.)
And
One of Heat-Ex satisfies condition ① or ② or ③ below

Condition ① : Accumulated operating time is 150 minutes* or longer:
"Heat exchange liquid temperature (TH9 and TH10) ≦ -2°C"
*75 minutes: when indoor unit connection capacity ≦ 90% at 1 outdoor unit connection.

Condition ② : Accumulated time 10 minutes:
"Heat exchange liquid temperature (TH9 and TH10) ≦ Defrosting Start Judgment Temperature*
And
"During heat exchange liquid temperature keeps droping "

*Defrosting Start Judgment Temperature(°C) = 0.8 x Outdoor temperature (°C) - 11.6
-However, -27.6°C to - 6°C
If the calculated result is lower than -27.6°C, the judgment temperature is defined as -27.6°C
If the calculated result is higher than -6°C, the judgment temperature is defined as -6°C
(Defrosting start judgment temperature are determined by the outdoor temperature.)

Condition ③ : Less than 10 minutes operation at outdoor temperature below 2℃ occured 20 times

< Defrosting end condition >

① At all outdoor units, heat exchange liquid temperature ≧ Defrosting End Judgment Temp.* and 180sec elapsed, and all of outdoor unit's Suction temperature - Low pressure saturation temperature ≦ 5°C
or
② When 15 minutes have elapsed from the start

*Defrosting End Judgment Temperature(°C)= 0.39 x outdoor temperature(°C) + 12.7
-However, 5°C to 12°C range
If the calculated result is lower than 5°C, the judgment temperature is defined as 5°C.
If the calculated result is higher than 12°C, the judgment temperature is defined as 12°C

< Operating state of each part during defrosting operation >

Actuator	Preparation process	On Defrost operatiom	Finishing process
Compressor	All compressor operaiotn Stop	All compressor start	All compressor operaiotn Stop
Heat Ex(4WV)	Change Condensor (OFF)	Cndensor (OFF)	Keeps the operation mode
FAN	Stops	Stops	Stops
EEV1 EEV2	0 pls	EEV1: 300 -> 200 pls EEV2: 480 -> 330 pls	0 pls
EEV3	0 pls	100 - 500 pls	0 pls
SV1,SV2	Open (Balancing)	Close	Open

[STEP 1]

All compressors sart the operation in defrosting

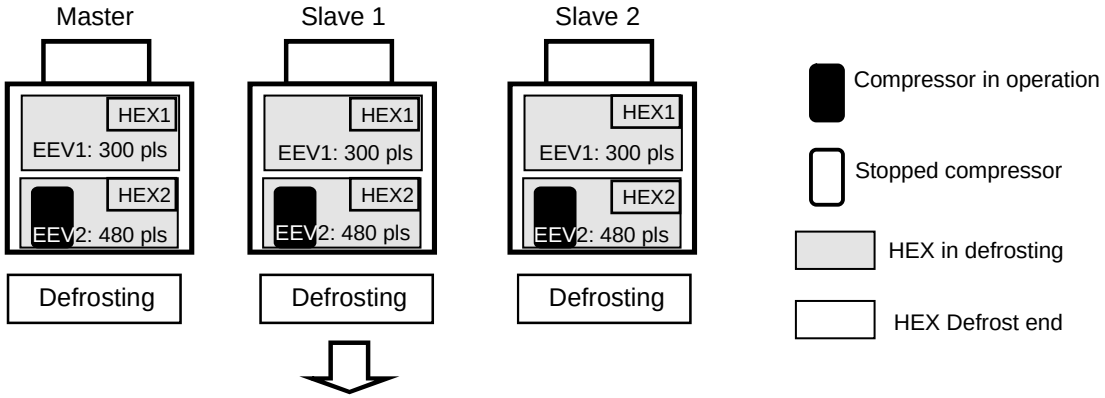

[STEP 2]

When one of the heat exchanger reached to the End condition, the expansion valve open pls will be set as smaller pls to make it easier for refrigerant distribution to another heat exchanger.

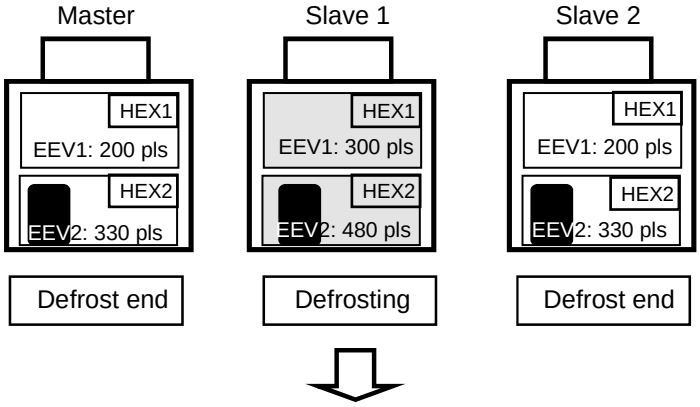

[STEP 3]

When the defrosting of all outdoor units ends, all outdoorunit stop.
The start rotation excution is done, and restarts

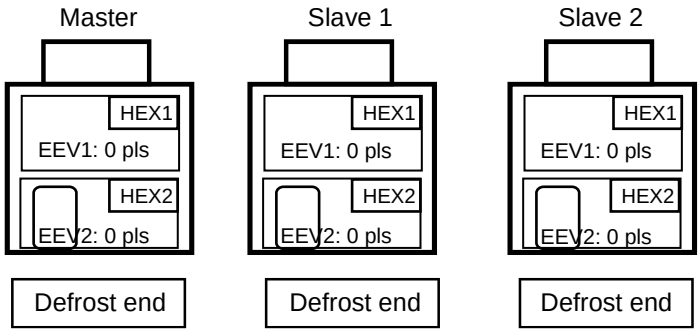

2-8-4 Low noise mode

When the low noise mode setting ON from Push SW or External input or System controller Input, the outdoor unit operates in the low noise mode as follows.

《Setting and corresponding operations》

External Input (CN131) on Master O.U or Low noise mode setting (Push SW)	Capacity priority setting (Push SW)	Low noise level setting (Push SW)	Operation mode
ON	OFF	LEVEL 1	LOW NOISE MODE ①
		LEVEL 2	LOW NOISE MODE ②
	ON	LEVEL 1	* Automatic switching ①
		LEVEL 2	* Automatic switching ②

《Low noise mode and operation contents》

			8HP	10HP	12HP S-Chassis	12HP L-Chassis	14HP	16HP
LOW NOISE MODE ①	COOL	Fan upper limit speed	620rpm	620rpm	620rpm	620rpm	620rpm	620rpm
		Upper limit compressor capacity	50rps	54rps	59rps	56rps	62rps	62rps
	HEAT	Fan upper limit speed	620rpm	620rpm	620rpm	620rpm	620rpm	620rpm
		Upper limit compressor capacity	50rps	62rps	62rps	56rps	71rps	71rps
LOW NOISE MODE ②	COOL	Fan upper limit speed	500rpm	500rpm	500rpm	500rpm	500rpm	500rpm
		Upper limit compressor capacity	50rps	50rps	50rps	47rps	53rps	53rps
	HEAT	Fan upper limit speed	500rpm	500rpm	500rpm	500rpm	500rpm	500rpm
		Upper limit compressor capacity	50rps	52rps	52rps	53rps	53rps	53rps

The operating noise is reduced by limiting the rotational speed of compressor and fan motor

LOW NOISE MODE ① ・・・The operating sound lowers from about 3 to 5 dB more than the rated value

LOW NOISE MODE ② ・・・The operating sound lowers from about 3 to 5 dB more than the LOW NOISE MODE ①

* Automatic switching ①

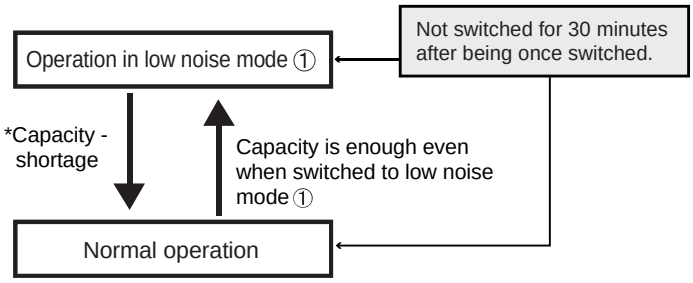

* Automatic switching ②

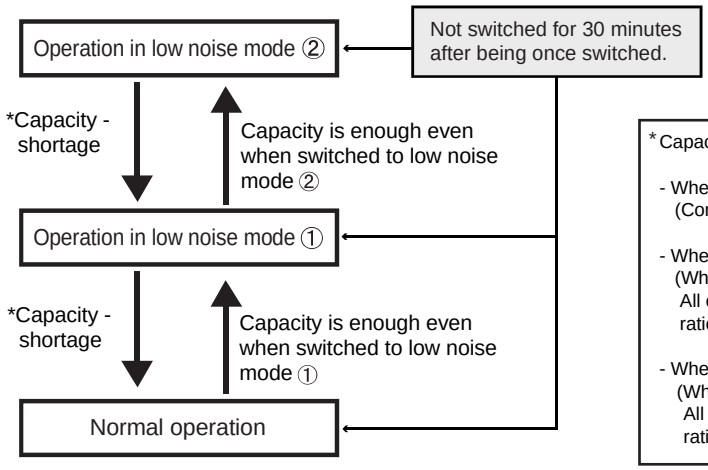

*Capacity shortage condition

- When the compressor capacity is not enough
  (Compressor operates with upper limit capacity for long time.)

- When condensing capacity is not enough in cooling / cooling main operation
  (When the following condition keeps for 5 minutes,
  All of HEX in use and FAN spped can not increase and High pressure saturation temperature ≧ 58℃(3.57MPa))

- When evaporating capacity is not enough in heating / heating main operation
  (When the following condition keeps for 5 minutes,
  All of HEX in use and FAN spped can not increase and low pressure saturation temperature ≦ 0℃)

2-8-5 Snow Falling Protection Fan Mode -Default Setting -

The fan rotates compulsorily at the maximum speed when the outdoor temperature becomes 5℃ or less
The fan is rotated for 1 minute at the fan step upper limit at the interval set by PUSH SW.
This mode ends when the outdoor temperature becomes 7℃ or more or operation starts.

When the Snow Falling protection is not neccesary, change the Function setting F2 -22 "Invalid"

(Operation contents)

Interval setting	PUSH SW setting (F2 - 23)	Interval time Int (min)
setting ④ (standard)	00	30
setting ①	01	5
setting ②	02	10
setting ③	03	20

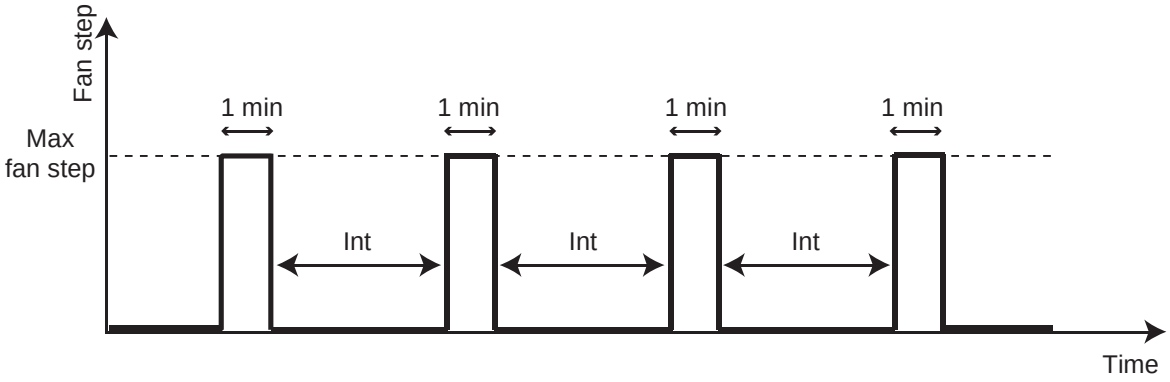

2-9 PROTECTIVE FUNCTION

2-9-1 Discharge temperature protection

Protective function	Detect device	Cool	Heat	Display	Starting conditions	Release conditions	Operation
Discharge temperature protection 1	Discharge temp. sensor <TH1>	○	○	—	Cooling/Cooling Main: Discharge temperature above 95℃ Heating/Heating Main: Discharge temperature above 102℃	Below 90℃ Below 97℃	EEV3 + 30pls/30 sec.
Discharge temperature protection 2	Discharge temp. sensor <TH1>	○		—	Cooling/Cooling Main: Discharge temperature Above 107℃	Below 105℃	Outdoor unit rotation execution * After rotation has been executed once; it is executed every 15 minutes.
Discharge temperature protection 3	Discharge temp. sensor <TH1>	○	○	—	Discharge temperature Above 105℃	Below 100℃	Compressor speed decrease - 6rps every 30 sec. until it becomes the cancelation condition.
Discharge temperature protection 4	Discharge temp. sensor <TH1>		○	—	Discharge temperature Above 90℃ (Heating/ Heating main)	Below 85℃	EEV's of operating indoor unit in heating mode (incl. the Thermo OFF indoor units) gradually opens. (Thermo OFF indoor unit; max. 200 pls)
Discharge temperature protection 5	Discharge temp. sensor <TH1>		○	—	Discharge temperature Above 95℃	Below 90℃	EEV1 and EEV2 operating outdoor unit +10pls / 30sec
Discharge temperature protection stop	Discharge temp. sensor <TH1>	○	○	P1	Pattern 1: Discharge temperature above 115℃	3 minutes have elapsed and Discharge temperature below 80℃	Corresponding outdoor unit stops
				EA11	Pattern 2 Condition 1 generated 2 times within 40 minutes	Error reset (push button SW) executed after power reset	Corresponding outdoor unit stops (Permanent stop) & Error display

Discharge temperature protection -Summary-

Protection controlling range in Cooling mode

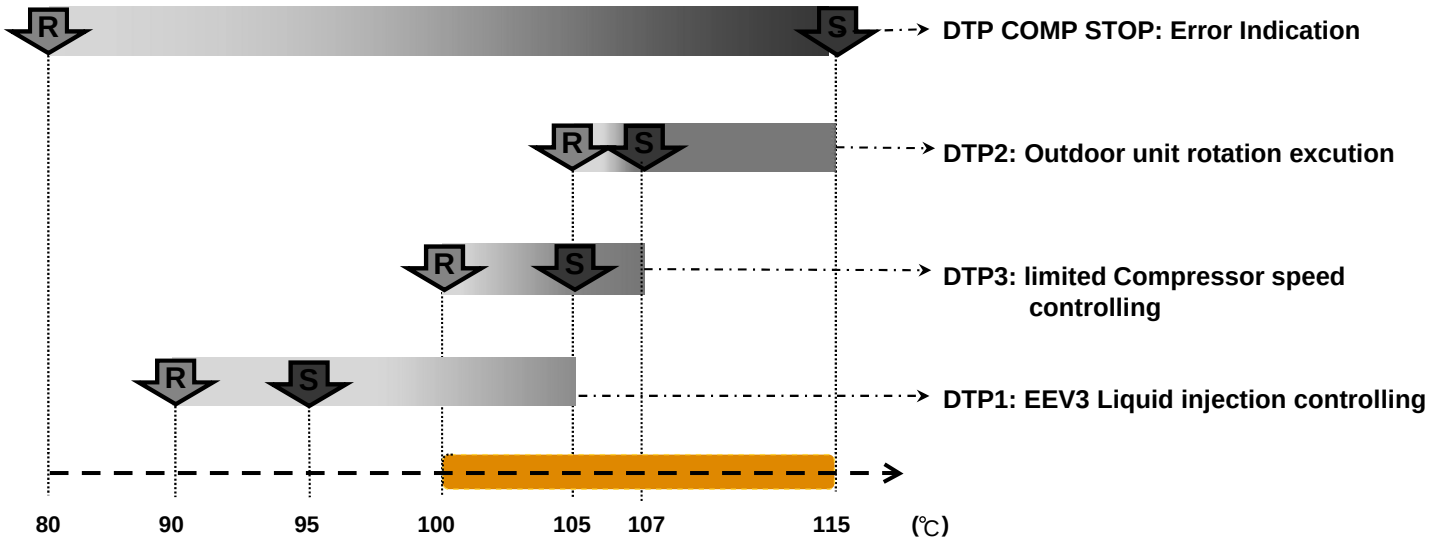

Note: In cooling mode, there are 4 kind of discharge temp. protections are existing and,
The protection operation by EEV exists only on the Outdoor unit.
Target pressure controlling will be cancelled when the temperature is in the range color orange.

Protection controlling range in Heating mode

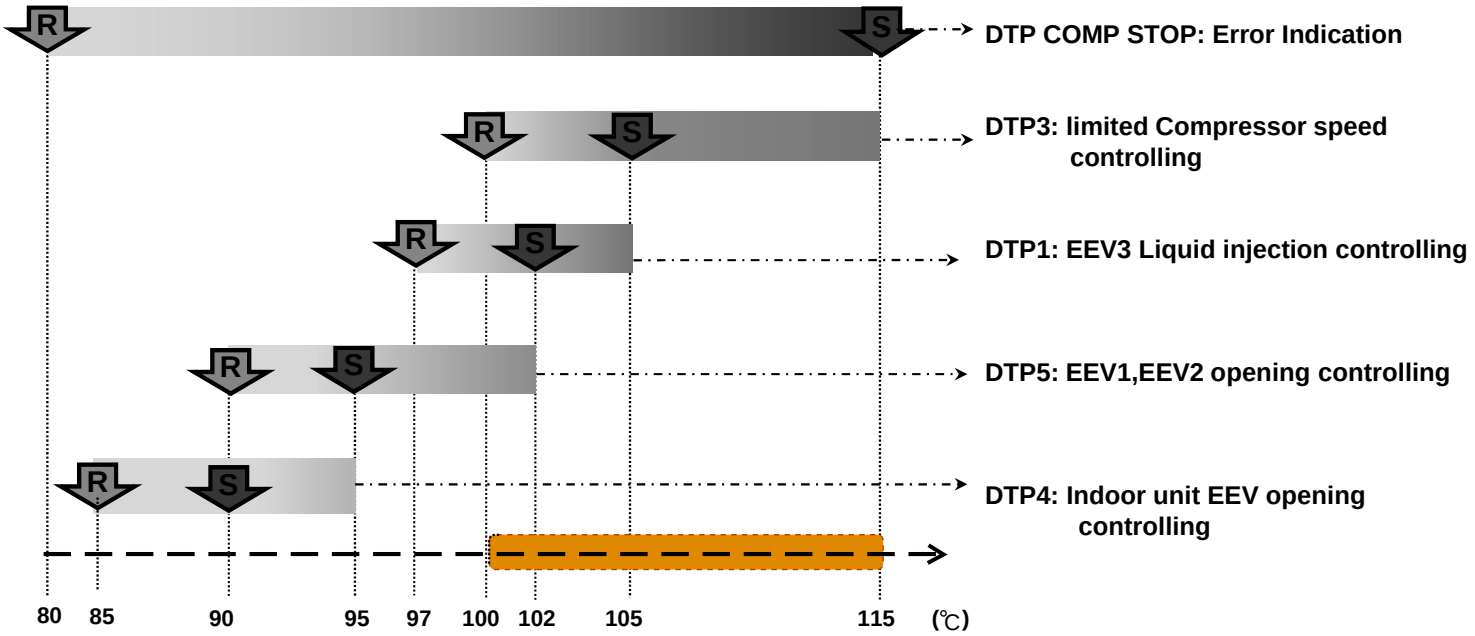

Note: In heating mode, there are 5 kind of discharge temp. protections are existing.
and protection operation by EEV exists IU and O.U
Target pressure controlling will be cancelled when the temperature is in the range of orange.

2-9-2 High pressure protection

Protective function	Detect device	Cool	Heat	Display	Start condition	Release condition	Operation
High pressure protection 1	High pressure sensor	○		—	Above 3.94MPa	60 sec. elapsed and Below 3.70MPa	SV2 =>ON
High pressure protection 2	High pressure sensor		○	—	Pattern 1 Above 3.40 (3.70)* MPa	60 sec. elapsed and Below 3.24 (3.54)* MPa	SV2 =>ON
					Pattern 2 Above 3.50 (3.80)* MPa	180 sec. elapsed and Below 3.34 (3.64)* Mpa	SV1, SV2 =>ON
Abnormal high pressure protection control	High pressure sensor	○	○	—	Pattern 1 Cooling/Cooling Main: Above 3.78MPa	25 sec. elapsed and Below 3.70Mpa	Compressor rotation speed rise up prohibit
					Heating /Heating Main: Above 3.24 (3.54)* MPa	25 sec. elapsed and Below 3.19(3.49)* Mpa	
					Pattern 2 Cooling/Cooling Main: Above 3.90MPa	25 sec. elapsed and Below 3.78MPa	Compressor rotation speed degrease - 18.5 rps (-15.0 rps) every30 sec. until cancel condition. ( ): L-Chassis
					Heating /Heating Main: Above 3.30(3.60)* Mpa	25 sec. elapsed and below 3.24(3.54)* MPa	
High Pressure Protection Stop 1	High pressure sensor	○	○	P2	Pattern 1 Above 4.00MPa	5 minutes elapsed and Below 3.50MPa	Corresponding outdoor unit stops
				EA41	Pattern 2 Pattern 1 generated 3 times within 60 minutes	10minutes elapsed and below 3.50MPa	Corresponding outdoor unit stops & Error display
High pressure protection stop 2	High pressure switch	○	○	P2	Pattern 1 Pressure SW operate (More than 4.20MPa detects)	5 minutes elapsed and pressure SW reset (3.2MPa)	Corresponding outdoor unit stops
				EA42	Pattern 2 Pattern 1 generated 3 times within 60 minutes	10 minutes elapsed and pressure SW reset (3.2MPa)	Corresponding outdoor unit stops & Error display

*The value in ( ) , when the compressor is operating more than 30Hz.

High pressure protection -Summary-

Protection controlling range in cooling operaing mode

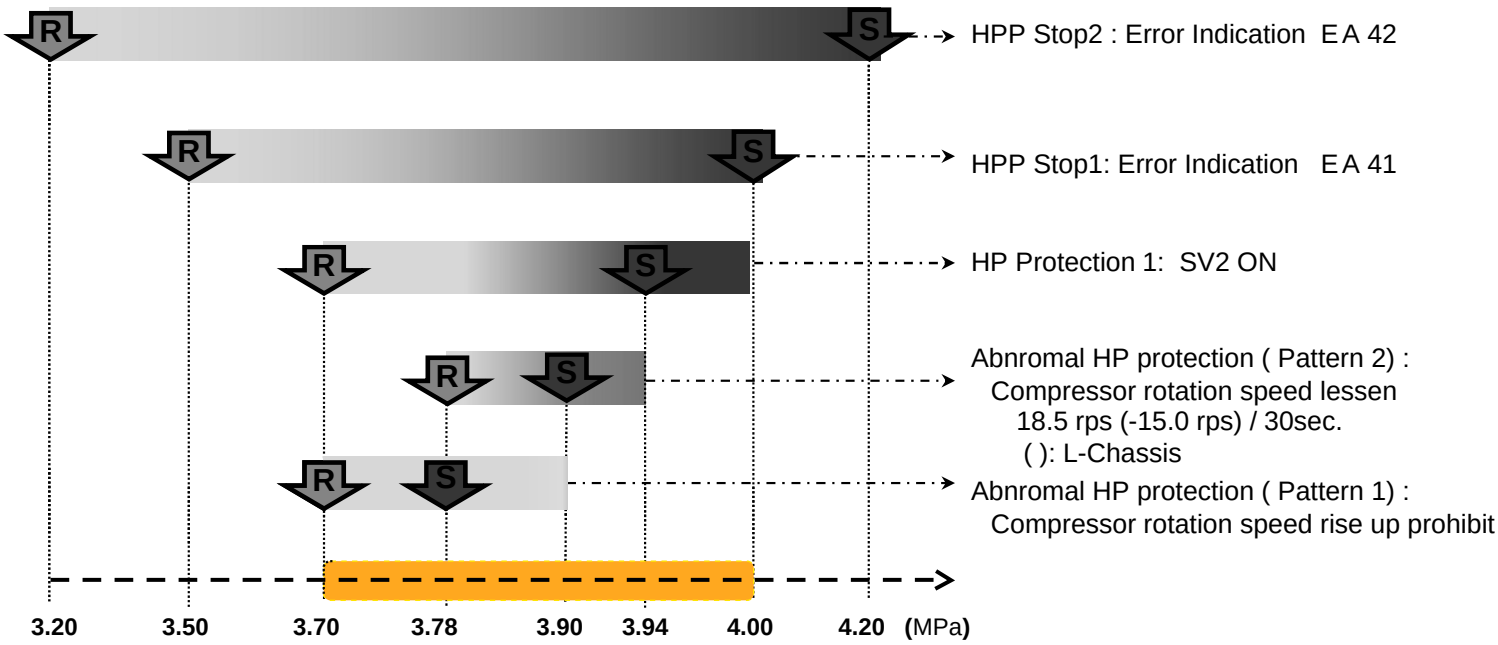

Note: In cooling mode, there are 5 kind of high pressure protections are existing.
Target pressure controlling will be cancelled when the operating pressure is in the range of orange.

Protection controlling range in heating operaing mode

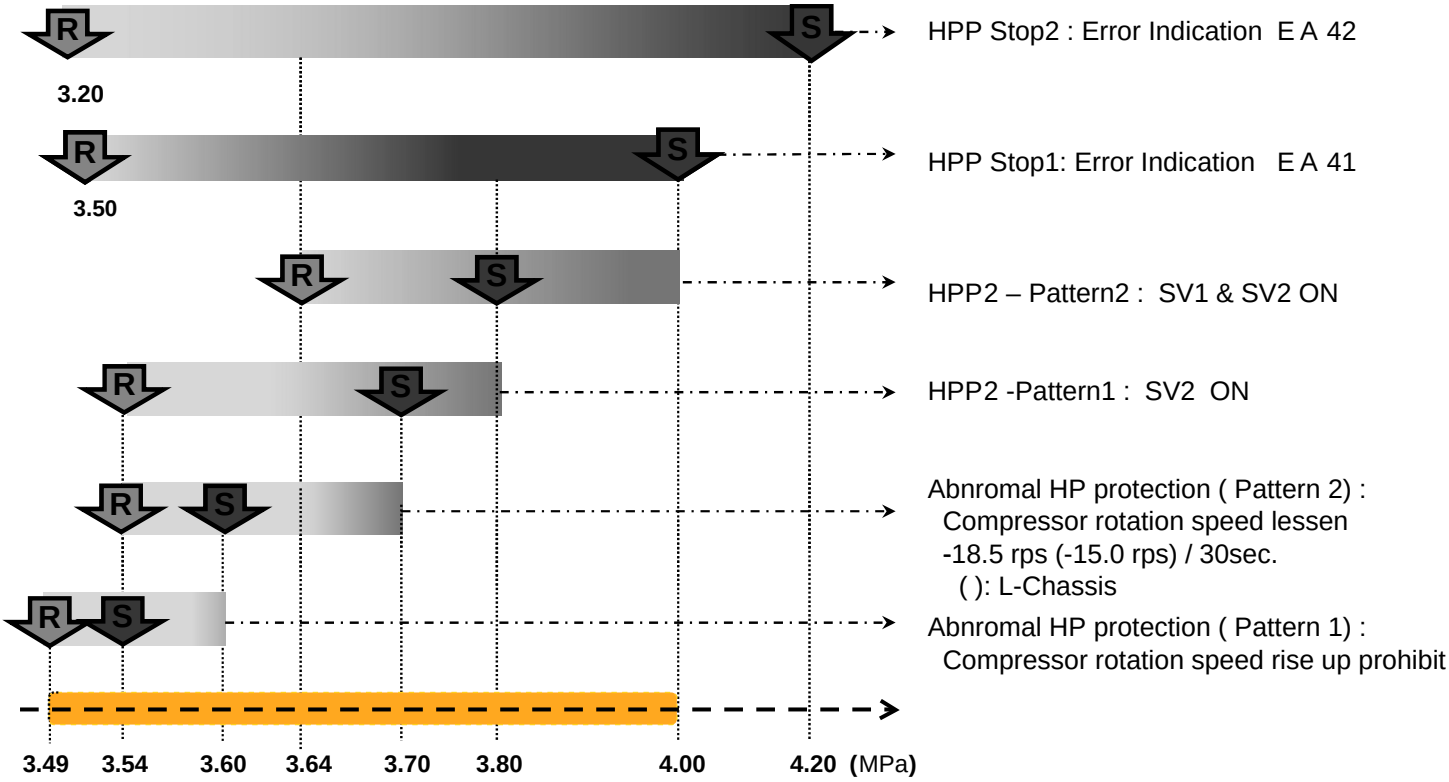

Note: In heating mode, there are 6 kind of high pressure protections are existing.
Target pressure controlling will be cancelled when the operating pressure is in the range of orange.

2-9-3 Low pressure protection

Protective function	Detect device	Cool	Heat	Display	Start condition	Release condition	Operation
Low pressure protection 1	Low pressure sensor	○	○	—	Below 0.10MPa	3minutes elapsed and Above 0.17MPa	SV1 =>ON
Low pressure protection 2	Low pressure sensor		○	—	After compressor started and 3 minutes elapsed and Below 0.18MPa	3minutes elapsed and above 0.22MPa	Operating Indoor unit EEV forced controlling -Thermo-OFF indoor unit: 450pls. -Thermo-ON indoor unit: gradually opens.
Low pressure protection 3	Low pressure sensor		○	—	Below 0.13MPa and SH* above 10℃ and EEV1 (EEV2) is operating with less than 52pls. *SH = Heat-Ex1(2) Gas temp - Low pressure saturation temp.	Except the start condition	EEV1 (EEV2) set 52 plus
Abnormal low pressure protection control	Low pressure sensor	○	○	—	Below 0.16MPa	3minutes elapsed and above 0.18MPa	Compressor rotation speed lessen in the limited time until above 0.17Mpa (Compressor rotation speed rise up prohibit)
Low pressure protection stop	Low pressure sensor	○	○	P3	Pattern 1 Below 0.05MPa or 0.10MPa for 10minutes.	3minutes elapsed and Above 0.17Mpa	Corresponding outdoor unit stops
				EA51	Pattern 2 Pattern 1 generated 5 times within 180 minutes	Error reset (push button SW) executed after power turned on	Corresponding outdoor unit stops (Permanent stop) & Error display

Low pressure protection - Summary -

Protection controlling range in cooling / heating operaing mode

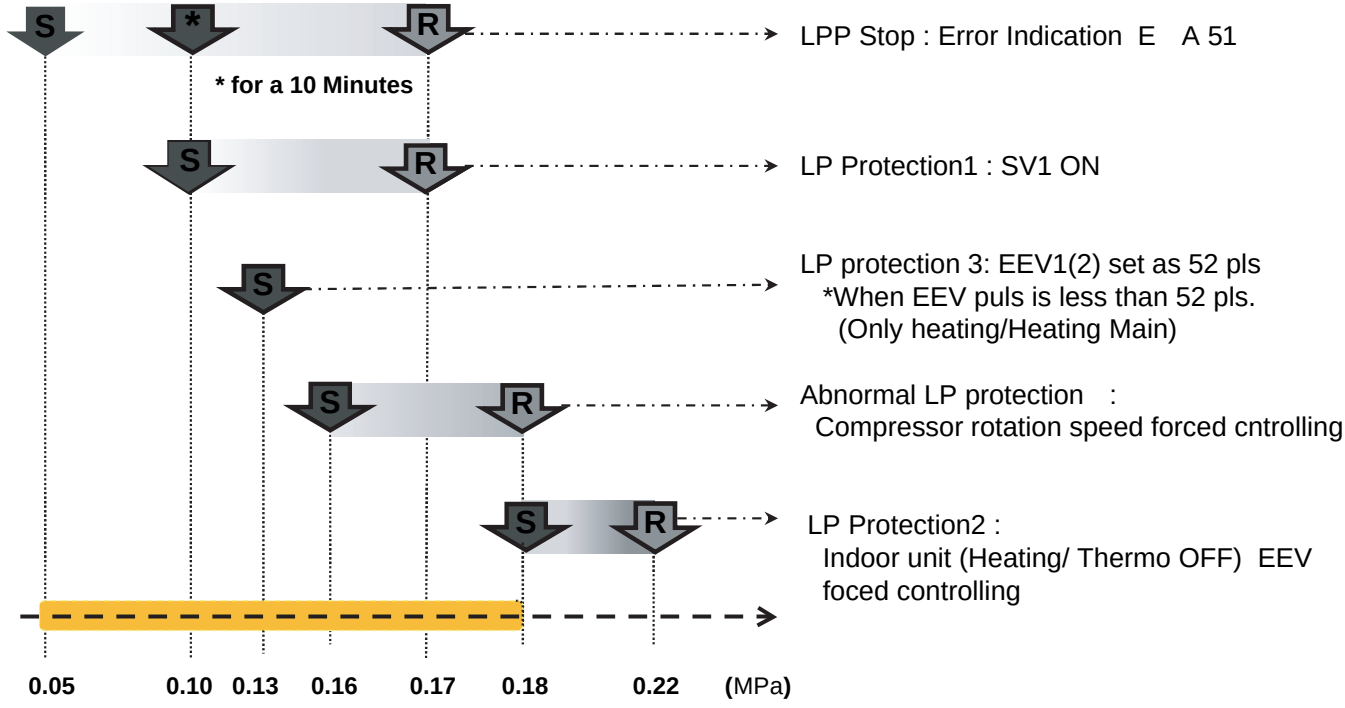

Note: Target pressure controlling will be cancelled when the operating pressure is in the range of orange.

2-9-4 Heatsink temperature protection

( ) : L-Chassis

Protective function	Detect device	Cool	Heat	Display	Start condition	Release condition	Operation
Heat sink temperature protection 1	Heatsink temp sensor	○	○	—	Above 75℃ (75℃)	Below 75℃ (75℃)	Cancel Fan speed step down.
Heat sink temperature protection 2	Heatsink temp sensor	○	○	—	Above 84℃ (83℃)	Below 84℃ (83℃)	Fan speed up 1 step every 2 minutes.
Heat sink temperature protection 3	Heatsink temp sensor	○	○	—	Above 88℃ (87℃)	Below 75℃ (75℃)	Compressor rotation speed lessens- 10 rps/ 120sec.
Heatsink temperature protection stop	Heatsink temp sensor	○	○	—	(Pattern 1 Above 92℃ (91℃)	3 minutes elapsed, and below 75℃ (75℃)	Compressor stops
				EAC4	Pattern 2 Pattern 1 generated 3 times within 60 minutes	10 minutes elapsed, and below 75℃ (75℃)	Compressor stop and Error indication.

2-9-5 Compressor temperature protection

Protective function	Detect device	Cool	Heat	Display	Start condition	Release condition	Operation
Compressor temperature protection stop	Compressor temp. sensor <TH11>	○	○	P4	Pattern 1 Compressor temperature above 115℃	3 minutes have elapsed and Discharge temp. below 80℃	Corresponding outdoor unit stops
				EA31	Pattern 2 Pattern 1 generated 2 times within 40 minutes	Error reset (push button SW) executed after power reset.	Corresponding outdoor unit stops (Permanent stop) & Error display

2-9-6 O.U Heat - Ex.1(2) Gas Temp. abnormal stop

Protective function	Detect device	Cool	Heat	Display	Start condition	Release condition	Operation
O.U Heat - Ex. 1(2) Gas Temp. abnormal stop	Heat-Ex 1(2) Gas temp. Sensor <TH7,TH8>	○		EA63 (Heat Ex1) EA64 (Heat Ex2)	Heat Ex.1(2) gas temp. sensor TH7 (TH8) for use as condenser (4Way valve: Off, EEV: Open) is detected abnormally-low to High pressure saturated temp. for 4 minutes or more.	Error reset (push button SW) executed after power turned on	System Stop and Error indication

2-9-7 Over current protection

Protective function	Detect device	Cool	Heat	Display	Start condition	Release condition	Operation
Overcurrecnt protection stop	Inverter PCB Embeded	○	○	E941 (permanent stop)	Over current protection circuit detects (Abnormal current) in 5 times during compressor operatng.	Error reset (push button SW) executed after power turned on	Compressor stop and Error indication "Trip Detection"
				E931 (permanent stop)	Over current protection circuit detects (Abnormal current) at the compressor start-up.		Compressor stop and Error indication "Inverter Compressor Start up Error"

2-9-8 Compressor Frequency Maximum setting protection

( ) : L-Chassis

Protective function	Detect device	Cool	Heat	Display	Start condition	Release condition	Operation
Compressor Frequency Maximum setting protection	Filter PCB Current transformer	○	○	—	Pattern 1 Current value more than : 16.0A (8 Hp) 20.2A (10 Hp, 12 Hp) 33.0A (14 Hp, 16 Hp)	Current value less than the start condition	Compressor speed rise up prohibited
				—	Pattern 2 Current value more than: 17.0A (8 Hp) 21.2A (10 Hp, 12 Hp) 34.0A (14 Hp, 16 Hp)	Current value less than the start condition	Compressor speed lowered

2-9-9 Compressor compress ratio protection

( ) : L-Chassis

Protective function	Detect device	Cool	Heat	Display	Start condition	Release condition	Operation
Compressor compression ratio protecion	High pressure sensor and Low pressure sensor	○	○	—	Compression ratio* above 9 (8)	3 minutes elapsed, and below 8 (7.5)	SV1 => ON
Compression ratio protecion stop	High pressure sensor and Low pressure sensor	○	○	P7	When the compressor is operating at the minimum rotation speed and the compression ratio exceeds 8.0 and the operation continues for 3 minutes or more.	When the compression ratio is 8.0 or less and 3 minutes have passed.	Corresponding outdoor unit stop.

Compression ratio : $\frac{HPS + 0.1}{LPS + 0.1}$

2-9-10 Fan Motor, Motor Driver abnormal stop protection

Protective function	Detect device	Cool	Heat	Display	Start condition	Release condition	Operation
Fan Motor lock protection stop	Embeded device	○	○	E97. 1	1. When the outdoor fan rotation speed is less than 100rpm in 20seconds after fan motor starts. 2. After the fan motor restarts, and when the condition 1 is repeated consecutively 4 times.	Error reset (push button SW) executed after power turned on	Fan Motor and Compressor Stop Error indication
Fan Motor temperature protection stop	Embeded device	○	○	E97. 5	1. When the FAN motor failed the operation more than 470rpm. 2. After the fan motor restarts, and if the fan motor cannot operate at 470rpm or more, or the condition 1 is repeated consecutively 3 times within 60 minutes.		
Fan Motor driver protection stop	Embeded device	○	○	E97. 9	When the Driver PCB detects the following abnormalities, Driver PCB defective, Fan motor defective (short circuit), Main PCB defective (DC output abnormal), lose connection, or Disconnecting wire.		

2-9-11 EEV Coil abnormal Stop

Protective function	Detect device	Cool	Heat	Display	Start condition	Release condition	Operation
Indoor unit EEV coil abnormal Stop	Indoor unit Controller PCB EEV drive Circuit	○	○	Error on IU. LED blinks Operation 5 times Timer 2 times	When the EEV coil drive circuit is open circuit	Drive circuit detects normal condition and Power reset	System Stop Error indication “I.U Coil 1 Error”
Outdoot unit EEV coil 1,2,3 abnormal Stop	Outdoor unit Controller PCB EEV drive Circuit	○	○	Error on OU. 7-Seg display E9A“X“ Coil No, “X“			System Stop Error indication “CoiX1 Error” Coil No, “X“

Refrigerant R410A INVERTER

AIRSTAGE™ VR-IV

Variable Refrigerant Flow System

3. INDOOR UNIT OPERATION

INDOOR UNIT OPERATION

3-1 FAN CONTROL

3-1-1 Fan Speed Setting

Fan speed setting

Press the FAN CONTROL button to set the fan speed.

AUTO → HIGH → MED → LOW

3-1-2 "AUTO" Position

1. COOL OPERATION

The fan speed is determined automatically in accordance with the condition "(T_R(corrected room temperature) - T_S (corrected set temperature)" as shown on the right. However, the fan speed zone is determined in the manner as the room temperature increases for the following cases.

(1) When the T_S is changed.
(2) When the operation mode is changed from other mode to "COOL".
(3) When the fan control is changed from other position to "AUTO".

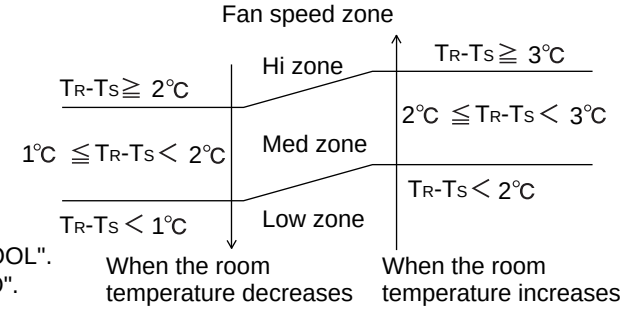

2. HEAT OPERATION

Same as Cooling operation, fan speed is decided by the difference between the room temperature and the set temperature.

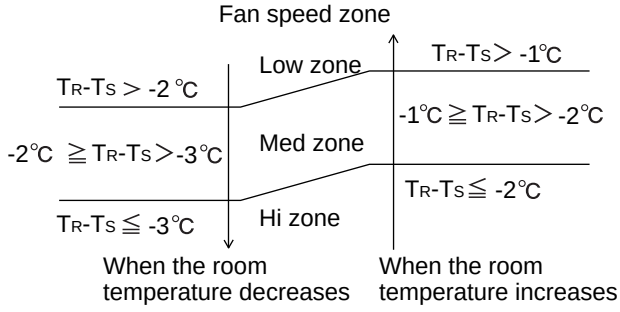

3. DRY OPERATION

The indoor fan always rotates at "Lo" speed.

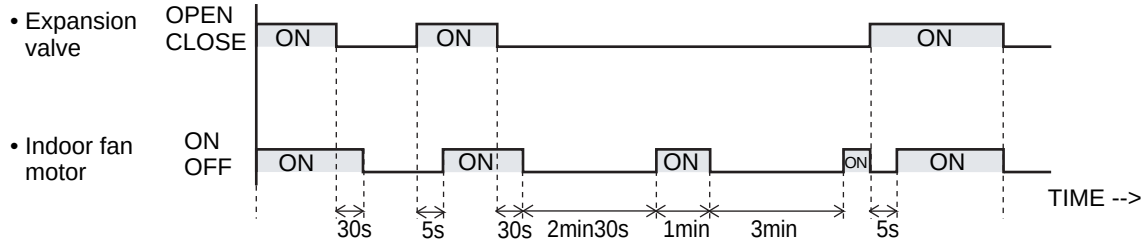

(1) The indoor fan starts operation 5 seconds after the electric expansion valve opens. However, when the indoor unit just starts its operation or the operation mode is changed from other to "DRY" and the refrigerant circulation is not stopped, the fan will rotate immediately without a delay time of 5 seconds.
(2) The indoor fan will stop in 30 seconds when the refrigerant circulation stops.
(3) The indoor fan will stop immediately when the indoor unit is stopped by pushing the stop button or by a setting of ON timer.
(4) When the refrigerant circulation is stopped due to a lower room temperature for more then 3 minutes, the fan will rotate 1 minutes at intervals of 3 minutes.
(5) When the indoor unit just starts its operation or the operation mode is changed from other to "DRY" and the refrigerant circulation is stopped, the fan will rotate for 1 minute and then it will operate according to the statement (4).

4. FAN OPERATION

The indoor fan always rotates at "Lo" speed.

* The above explanation may differ from the actual operating condition when the compressor is controlled under protection function.

3-2 MASTER CONTROL

3-2-1 Operation Mode Control

(1) Mode setting

Each possible operation mode in each connectable type is controlled as below.

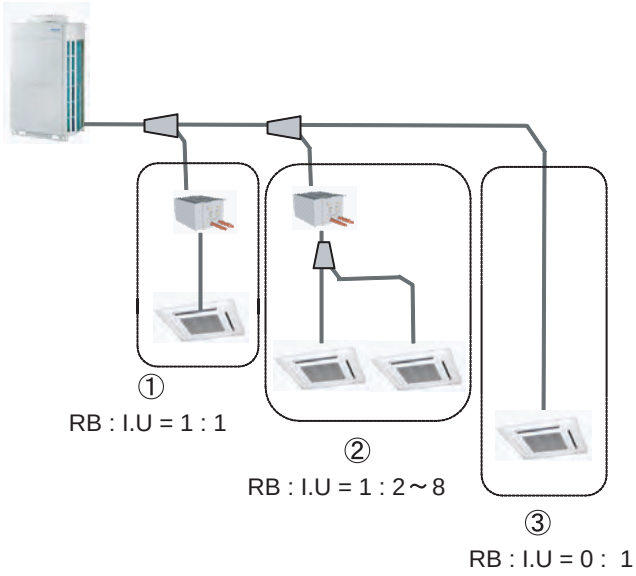

Connectable type	Cool	Dry	Heat	Auto	Fan
① Free Cool / Heat	○	○	○	○	○
② Fix Cool / Heat	○	○	○	*1	×
③ Only Cool	○	○	×	*2	○

○ : Mode available
× : Mode unavailable
*1 : Mode available when the priority given to administrative indoor unit.
*2 : Mode available between Dry and Cool.

(2) Cool, Dry and Heat Mode

Each operation mode is controlled as below.

	Cool	Dry	Heat	Fan
Indoor fan motor	Operates according to the AIRFLOW MODE setting.	See the fan control page.	Operates according to the AIR FLOW-MODE setting, and besides cold air prevention operation	Operates according to the AIR FLOW-MODE setting.
Drain pump	Turns ON-OFF by the drain pump control function			
Electrical expansion valve	Pulse controlled by the temperature difference calculation and freeze prevention control	Pulse controlled by the temperature difference calculation and freeze prevention function	Pulse controlled by the temperature difference.	Stop pulse

(3) Stop mode

Indoor fan motor : OFF
Electric expansion valve : Stop pulse
Drain pump : Turns ON-OFF by the drain pump control function

(4) Priority mode (for connectable type②)

The purpose of the priority mode is to restrict operation commands (heating, cooling, dry) from the connected indoor units. There are 3 priority modes of Neutral, Cooling Priority, and Heating Priority. The operation modes restricted by each of these modes are as follows:

Priority mode	Restricted operation mode
Neutral	No restrictions
Cooling priority	Heating
Heating priority	Cooling, dry

Priority mode decision methods

Method 1. (Default value)

The initial priority mode is made Neutral and is shifted to Cooling Priority when cooling and to Heating Priority when heating depending on which operation mode (cooling, heating) was input first.
After shifting to Cooling Priority or Heating Priority, the priority mode shifts to Neutral only when there was a Stop input from all the indoor units in the same RB Group.

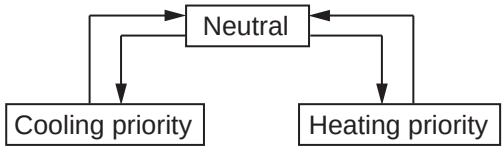

Method 2. (Management by RB unit)

Operation mode management is made "Management by RB unit" by RB unit DIP-SW (field setting).
The priority mode shifts to Cooling Priority or Heating Priority in accordance with input from the RB unit regardless of the current mode.

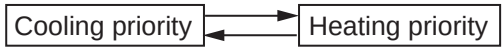

Method 3. (Management by indoor unit)

Operation mode management is made "Management by indoor unit" by RB unit DIP-SW (field setting).
Then the master indoor unit is set by wired remote controller.
Thereupon the priority mode shifts to Cooling Priority or Heating Priority in accordance with input from the master indoor unit regardless of the current priority mode.
The priority mode is fixed at either cooling or heating even if the master indoor unit stops
Cooling/Heating switching can be performed by the master indoor unit only.

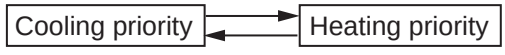

(5) Opposite operation mode (for connectable type②)

When the operation mode commanded from an indoor unit (remote controller) and the operation mode allowed by the system (cooling and dry operation for cooling only type and operation mode allowed by priority mode for heat pump type) do not match, it is indicated by blinking of an LED.

Timer lamp: 3 secs ON/1 sec OFF repeated

3-2-1 Operation Mode Control for Outdoor air unit

(1) Mode setting

Each possible operation mode in each connectable type is controlled as below.

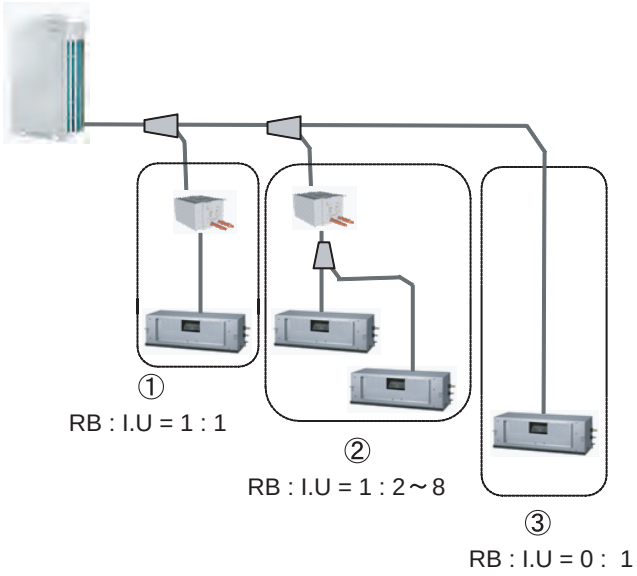

Connectable type	Cool	Dry	Heat	Fan
① Free Cool / Heat	○	×	○	○
② Fix Cool / Heat	○	×	○	○
③ Only Cool	○	×	×	○

○ : Mode available
× : Mode unavailable

(2) Cool and Heat Mode

Each operation mode is controlled as below.

	Cool	Heat	Fan
Outdoor air unit fan motor	Operates according to the HIGH MODE setting.	Operates according to the HIGH MODE setting.	Operates according to the HIGH MODE setting.
Drain pump	Turns ON-OFF by the drain pump control function		
Electrical expansion valve	Pulse controlled by the temperature difference calculation and freeze prevention control	Pulse controlled by the temperature difference.	Stop pulse
Solenoid valve	Closed at all times	Opened at thermostat off and compressor on. Closed at other operation.	Closed at all times

(3) Stop mode

Outdoor air unit fan motor : OFF
Electric expansion valve : Stop pulse
Drain pump : Turns ON-OFF by the drain pump control function
Solenoid valve : Closed

(4) Priority mode (for connectable type②)

The purpose of the priority mode is to restrict operation commands (heating, cooling) from the connected outdoor air units. There are 3 priority modes of Neutral, Cooling Priority, and Heating Priority. The operation modes restricted by each of these modes are as follows:

Priority mode	Restricted operation mode
Neutral	No restrictions
Cooling priority	Heating
Heating priority	Cooling

Priority mode decision methods

Method 1. (Default value)

The initial priority mode is made Neutral and is shifted to Cooling Priority when cooling and to Heating Priority when heating depending on which operation mode (cooling, heating) was input first.
After shifting to Cooling Priority or Heating Priority, the priority mode shifts to Neutral only when there was a Stop input from all the indoor units in the same RB Group.

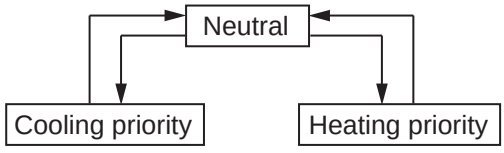

Method 2. (Management by RB unit)

Operation mode management is made "Management by RB unit" by RB unit DIP-SW (field setting).
The priority mode shifts to Cooling Priority or Heating Priority in accordance with input from the RB unit regardless of the current mode.

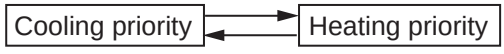

Method 3. (Management by indoor unit)

Operation mode management is made "Management by indoor unit" by RB unit DIP-SW (field setting).
Then the master indoor unit is set by wired remote controller.
Thereupon the priority mode shifts to Cooling Priority or Heating Priority in accordance with input from the master indoor unit regardless of the current priority mode.
The priority mode is fixed at either cooling or heating even if the master indoor unit stops
Cooling/Heating switching can be performed by the master indoor unit only.

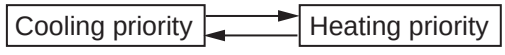

(5) Opposite operation mode (for connectable type②)

When the operation mode commanded from an indoor unit (remote controller) and the operation mode allowed by the system (cooling and dry operation for cooling only type and operation mode allowed by priority mode for heat pump type) do not match, it is indicated by blinking of an LED.

Timer lamp: 3 secs ON/1 sec OFF repeated

3-2-2 Auto Changeover Heating / Cooling Operation

[Function available Indoor unit(s)]

Connectable type ① : All Indoor units

Connectable type ② : Administrative indoor unit (Management Indoor unit) Refer to the setting Method

Setting Method

1. Switch operation mode management to "Management by indoor unit" by RB unit DIP-SW.
2. Set the master indoor unit by wired remote controller.
3. Judge cooling/heating by the difference between the master indoor unit's setting temperature and the room temperature.

■ AUTO CHANGEOVER operation

Operation flow chart

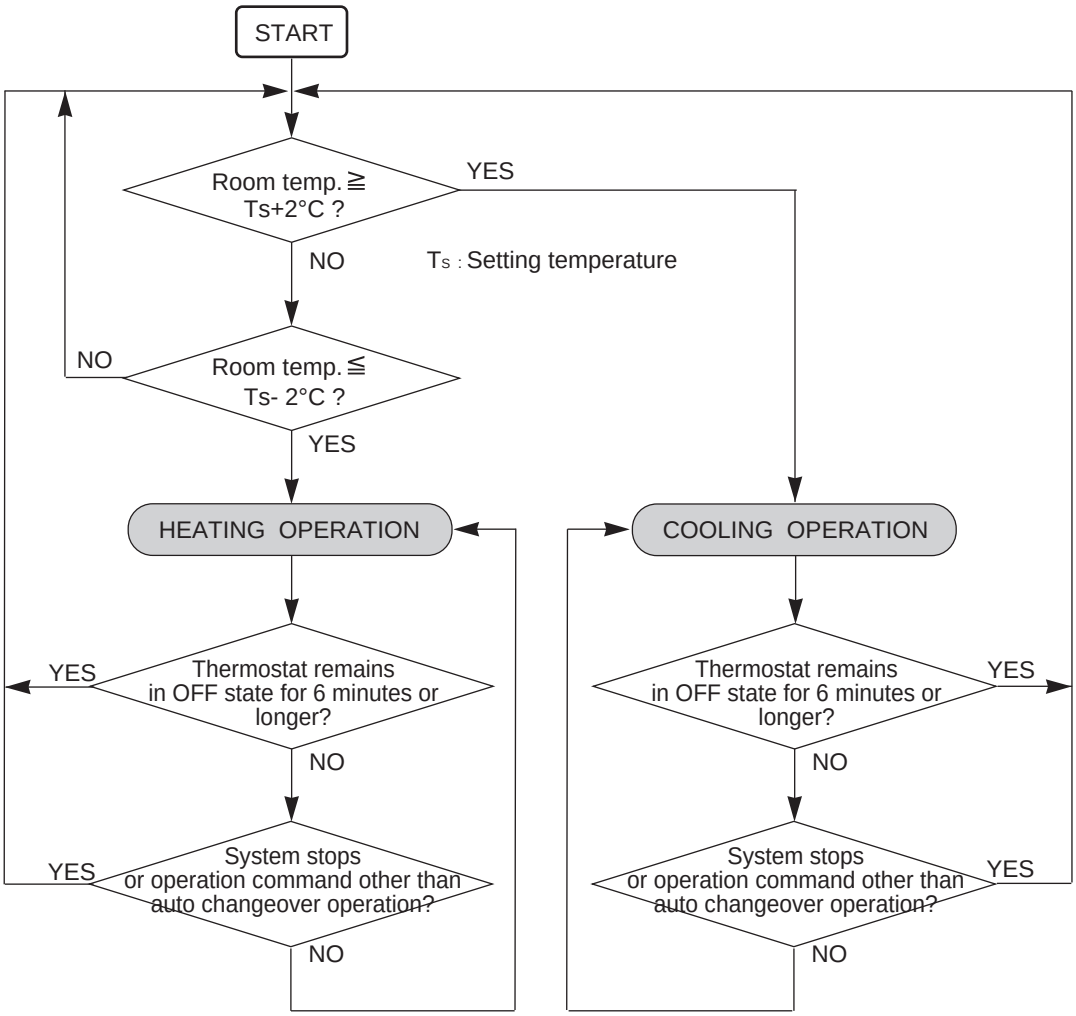

3-2-2 Auto Changeover Heating / Cooling Operation for Outdoor air unit

[Function available Outdoor air unit(s)]

Connectable type ① : All Outdoor air units

Connectable type ② : Administrative outdoor air unit (Management Outdoor air unit).
Refer to the setting Method

Setting Method

1. Switch operation mode management to "Management by outdoor air unit" by RB unit DIP-SW.
2. Set the master outdoor air unit by wired remote controller.
3. Judge cooling/heating by the difference between the master outdoor air unit's setting temperature and the suction airflow temperature

■ AUTO CHANGEOVER operation

Operation flow chart

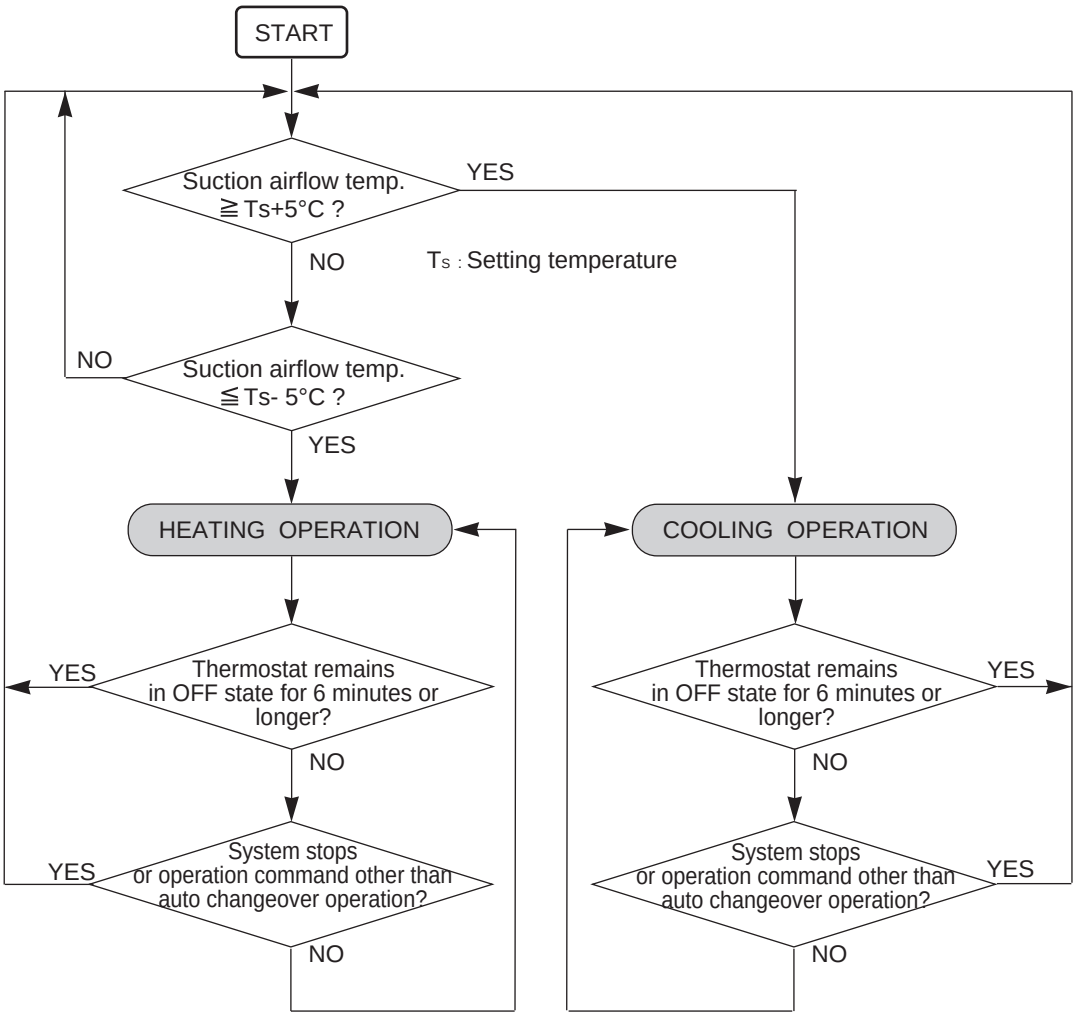

3-2-3 Auto Changeover Cooling / Dry Operation

[Function available Indoor unit(s)]

Connectable type ③ : Cooling Only indoor unit

Judge cooling/dry by the difference between the setting temperature and the room temperature.
In case of group connection of cooling only indoor unit, the room temperature sensor in wired remote controller manages the operating mode.

■ AUTO CHANGEOVER operation (COOLING ONLY TYPE)

Operation flow chart

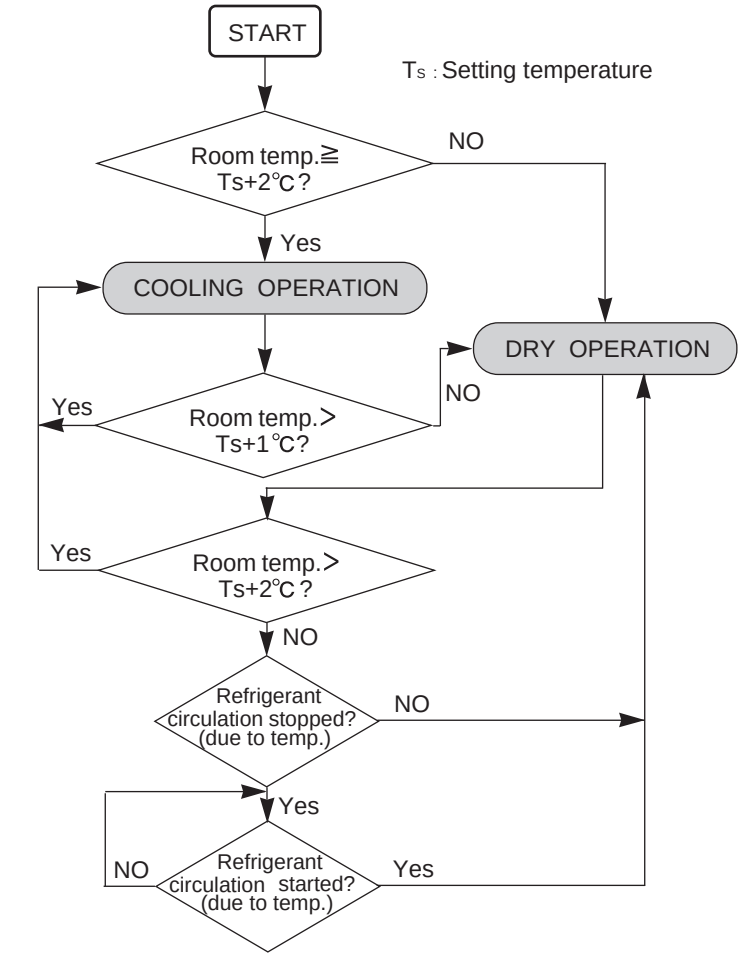

3-2-4 "COOL" Position

When using the cooling mode, set the temperature to a value lower than the current room temperature, otherwise the indoor unit will not start the cooling operation and only the fan will rotate.

An example for COOLING TEMPERATURE CONTROL time chart (Manual setting)

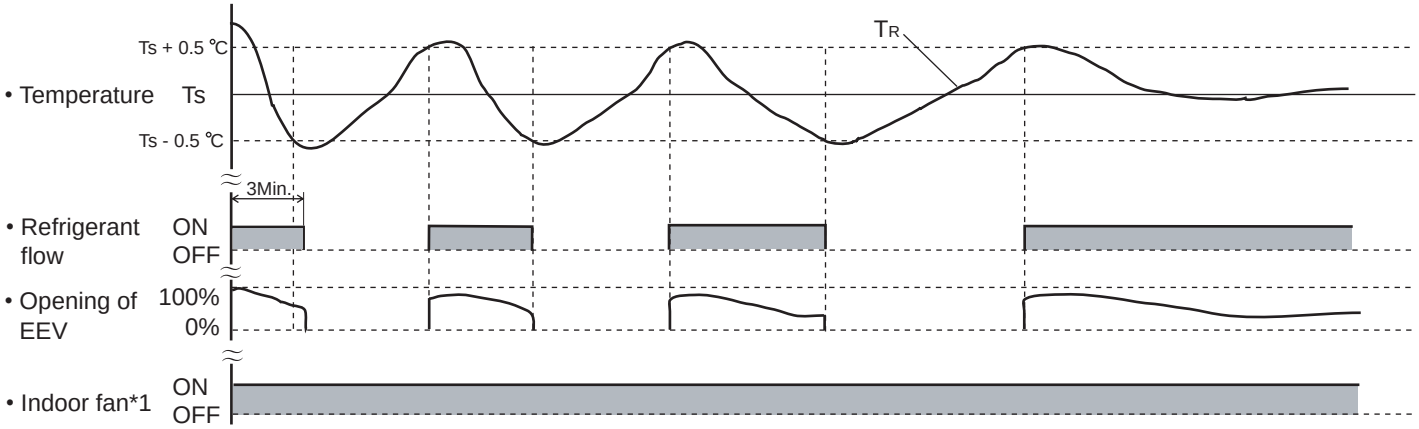

Ts : Corrected setting temperature
TR : Corrected room temperature
Ts + 0.5 ℃: The thres hold temperature of start of refrigrant flow
Ts - 0.5 ℃ : The thres hold temperature of stop of refrigrant flow

*1 When Cooling Thermo-OFF(Fuction setting) activates, the Indoor fan stops under the temperature controlling. (The room temperature detection in the wired remote controller has to be activated.)

3-2-5 "HEAT" Position

(1) When using the heating mode, set the temperature to a value higher than the current room temperature, otherwise the indoor unit will not start the heating operation.
(2) After the start of heating operation, the fan of indoor unit will not rotate until the heater exchange is warmed up to blow out warm air.
(3) During defrosting, the OPERATION indicator lamp flashes 6 sec. ON and 2 sec. OFF, and repeat. The heating operation will be temporarily interrupted.

An example for HEATING TEMPERATURE CONTROL time chart (Manual setting)

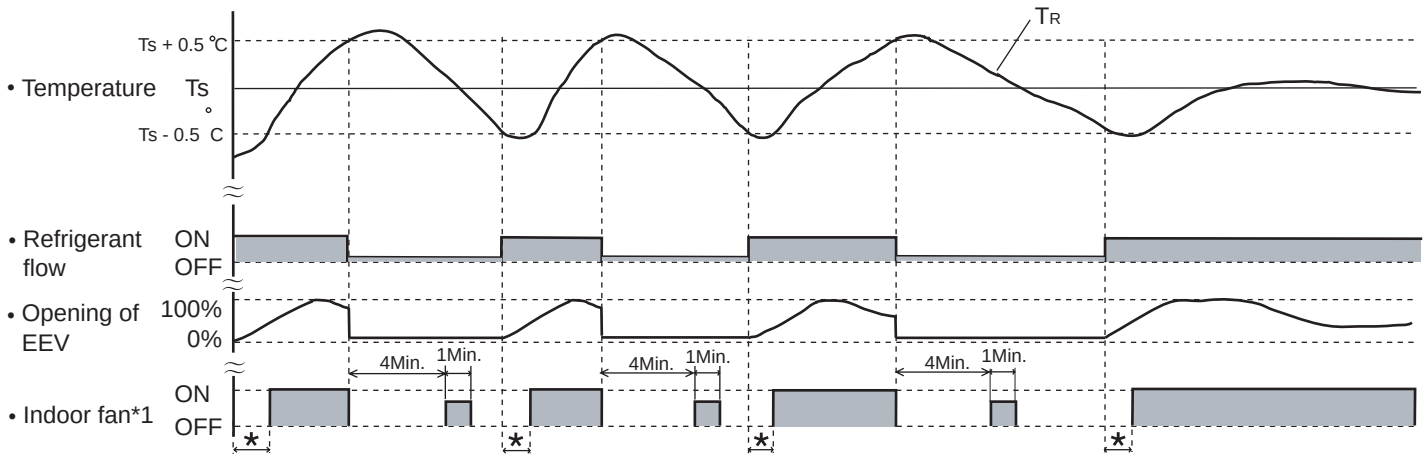

Ts : Corrected setting temperature
TR : Corrected room temperature
* : Duration of cold air prevention*2
Ts + 0.5 ℃: The thres hold temperature of start of refrigrant flow
Ts - 0.5 ℃ : The thres hold temperature of stop of refrigrant flow

*1 When the room temperature detection in the wired remote controlle activates, the Indoor fan stops at the thermo - OFF condition.
*2 When the cold air prevention (Fuction setting) invaldiates, the Indoor fan keeps the operation by the setting.

3-2-4 "COOL" Position for Outdoor air unit

When using the cooling mode, set the temperature to a value lower than the discharge airflow temperature, otherwise the outdoor air unit will not start the cooling operation and only the fan will rotate.

An example for COOLING TEMPERATURE CONTROL time chart (Manual setting)

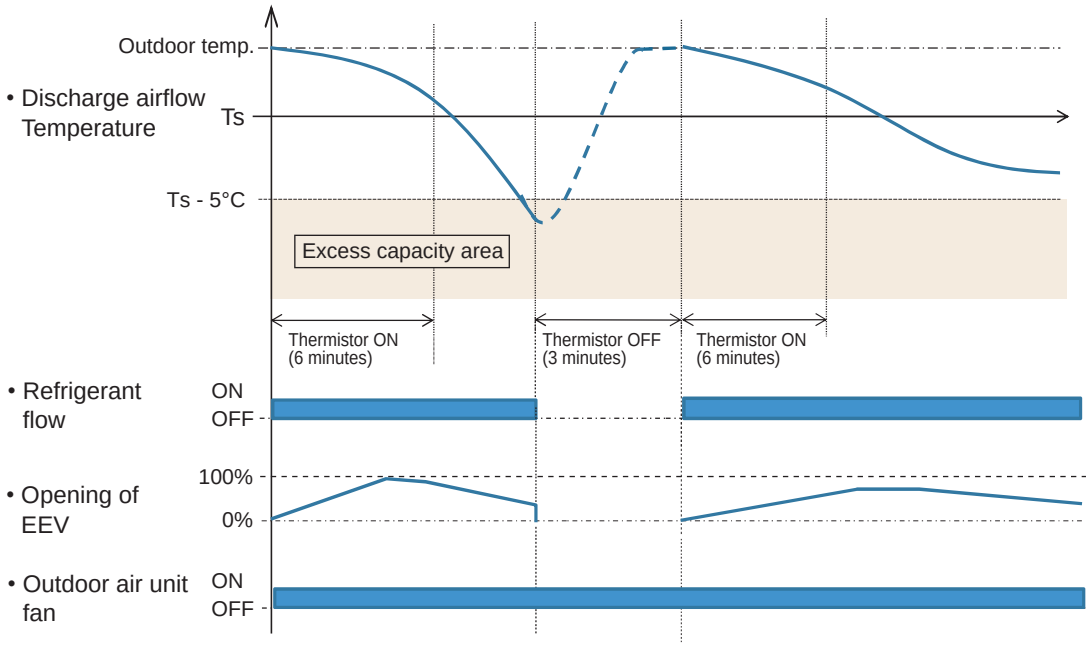

Ts : Corrected setting temperature

Ts + 0.5°C : The thres hold temperature of start of refrigerant flow
Ts - 5°C : The thres hold temperature of stop of refrigerant flow

3-2-5 "HEAT" Position for Outdoor air unit

(1) When using the heating mode, set the temperature to a value higher than the discharge airflow temperature, otherwise the outdoor air unit will not start the heating operation.

(2) During defrosting, the OPERATION indicator lamp flashes 6 sec. ON and 2 sec. OFF, and repeat. The heating operation will be temporarily interrupted.

An example for HEATING TEMPERATURE CONTROL time chart (Manual setting)

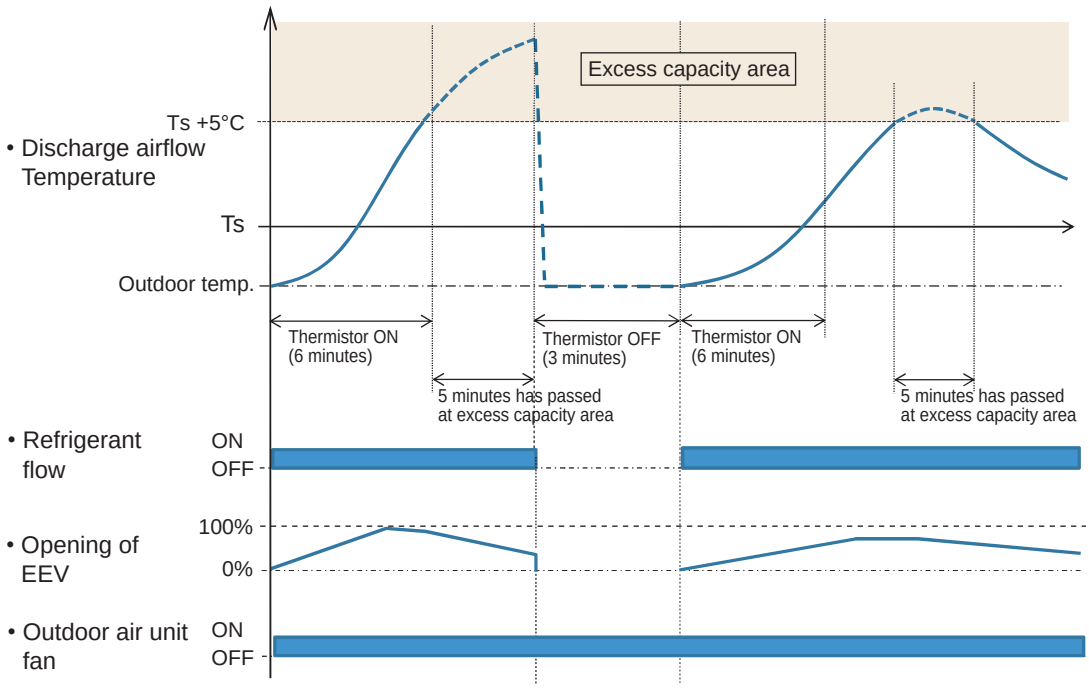

Ts : Corrected setting temperature

Ts - 0.5°C : The thres hold temperature of start of refrigerant flow
Ts + 5°C for 5 minutes or more
: The thres hold temperature of stop of refrigerant flow

3-3 LOUVER CONTROL

(1) ADJUSTING THE DIRECTION OF AIR CIRCULATION

Instructions relating to heating (✻) are applicable only to heat pump type outdoor unit.
Begin air conditioner operation before performing this procedure.

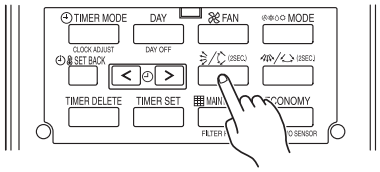

This instructions are applicable to "CEILING TYPE", "FLOOR/CEILING TYPE", "COMPACT CASSETTE TYPE", "4-WAY FLOW CASSETTE TYPE", "CIRCULAR FLOW CASSETTE TYPE" "3D FLOW CASSETTE TYPE", "WALL MOUNTED TYPE" and "COMPACT FLOOR TYPE".

Example : When set to vertical air direction.

Press the VERTICAL AIR FLOW DIRECTION SET button.

- Press the VERTICAL AIRFLOW DIRECTION button.
  The temperature display will change to the vertical airflow direction setting display.
- Press the VERTICAL AIRFLOW DIRECTION button to change the vertical louvre position.
  The position number will appear on the display.

Cooling & Dry : ①, ②, ③, ④
Heating : ①, ②, ③, ④

An example

■ An example of CEILING / FLOOR CEILING TYPE

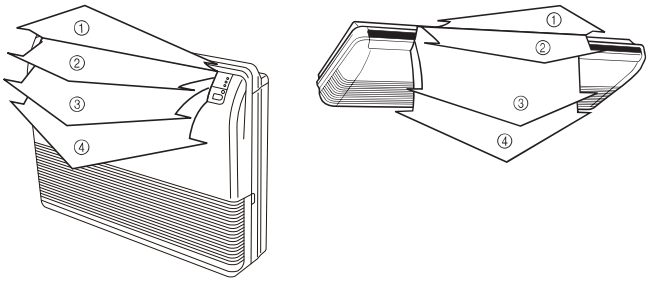

■ An example of 3D FLOW CASSETTE TYPE

The vertical airflow direction can be controlled with the remote controller.

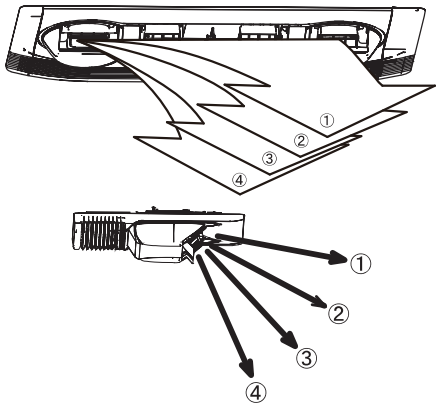

■ An example of COMPACT CASSETTE / 4-WAY FLOW CASSETTE / CIRCULAR FLOW CASSETTE TYPE

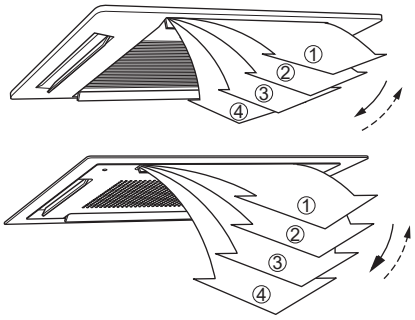

■ An example of WALL MOUNTED TYPE

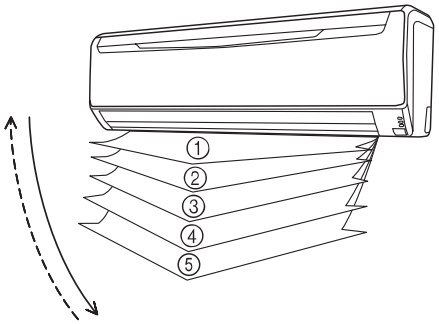

Adjustable Position (All Mode) ①, ②, ③, ④, ⑤
Position ② setting is available by only wiress remote controller

■ An example of WALL MOUNTED TYPE

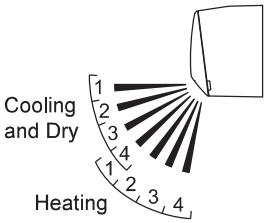

■ An example of COMPACT FLOOR TYPE

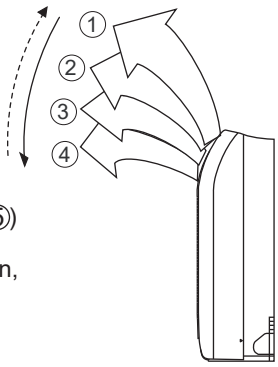

- Use the air direction adjustments within the ranges shown above.
- The vertical airflow direction is set automatically as shown, in accordance with the type of operation selected.
  During Cooling mode : Horizontal flow ①
  During Heating mode : Downward flow ④ (Large Wall mounted type:⑤)
- During AUTO mode operation, for the first minute after beginning operation, airflow will be horizontal ①, the air direction cannot be adjusted during this period.

Horizontal Air Direction Adjustment

This instructions are applicable to "CEILING TYPE", "FLOOR/CEILING TYPE" "3D FLOW CASSETTE TYPE" and "WALL MOUNTED TYPE".

Press the HORIZONTAL AIR FLOW DIRECTION SET button.

- Press the HORIZONTAL AIRFLOW DIRECTION button. The temperature display will change to the horizontal airflow direction setting display.
- Press the HORIZONTAL AIRFLOW DIRECTION button to change the horizontal louvre position. The position number will appear on the display.

Cooling & Dry : ①, ②, ③, ④, ⑤

Heating : ①, ②, ③, ④, ⑤

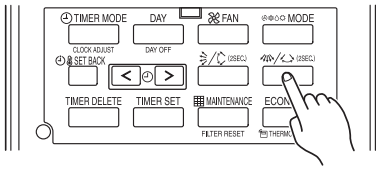

Example : When set to horizontal air direction.

■ **CEILING TYPE**
FLOOR/CEILING TYPE

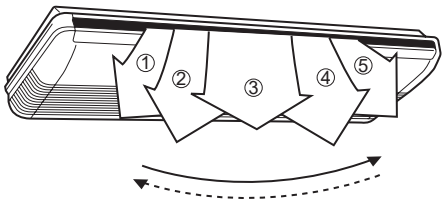

■ **WALL MOUNTED TYPE**

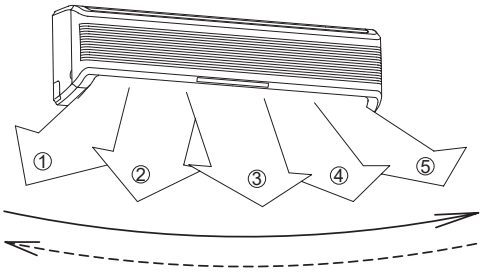

■ **3D FLOW CASSETTE TYPE**

The forizontal airflow direction can be controlled with remote controller.

(1)

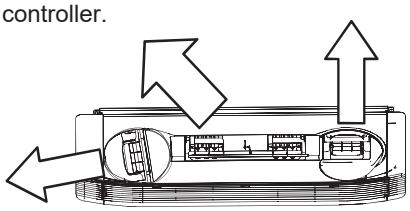

(2)

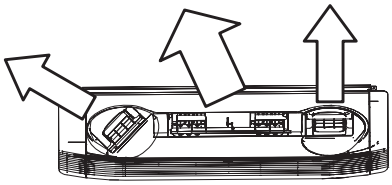

(3)

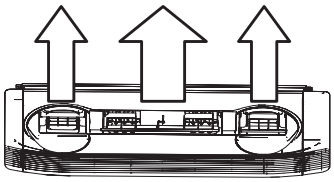

(4)

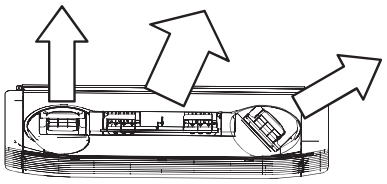

(5)

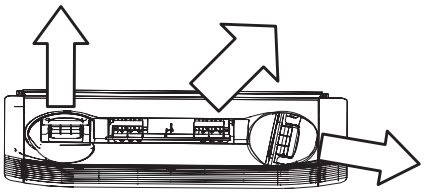

(2) SWING OPERATION

Instructions are applicable to "CEILING TYPE", "FLOOR/CEILING TYPE", "COMPACT CASSETTE TYPE", "4-WAY FLOW CASSETTE TYPE", "CIRCULAR FLOW CASSETTE TYPE" "3D FLOW CASSETTE TYPE", "WALL MOUNTED TYPE" and "COMPACT FLOOR TYPE".

Begin air conditioner operation before performing this procedure.

To select Vertical airflow SWING Operation

This instructions are applicable to "CEILING TYPE", "FLOOR/CEILING TYPE", "COMPACT CASSETTE TYPE", "4-WAY FLOW CASSETTE TYPE", "CIRCULAR FLOW CASSETTE TYPE", "3D FLOW CASSETTE TYPE", "WALL MOUNTED TYPE" and "COMPACT FLOOR TYPE".

Press the VERTICAL SWING button for more than two seconds.

The remote controller's Vertical Swing Display will light up.
In this mode, the UP/DOWN air direction flaps will swing automatically to direct the air flow both up and down.

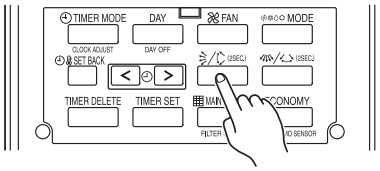

Example : When set to vertical swing.

To Stop Vertical airflow SWING Operation

Press the VERTICAL SWING button for more than two seconds once and again.

The remote controller's Vertical Swing Display will go out.
Airflow direction will return to the setting before swing was begun.

Instructions are applicable to "CEILING TYPE", "FLOOR/CEILING TYPE", "COMPACT CASSETTE TYPE", "4-WAY FLOW CASSETTE TYPE", "CIRCULAR FLOW CASSETTE TYPE" "3D FLOW CASSETTE TYPE", "WALL MOUNTED TYPE" and "COMPACT FLOOR TYPE".

About Vertical Airflow SWING Operation

- The SWING operation may stop temporarily when the air conditioner's fan is not operating, or when operating at very low speeds.
- The swing operation is not available depending on the model. Please refer to the operating manual for the indoor unit.

Air swing range

Air flow direction set	Range of swing
①	① to ④ (All range)
②	
③	
④	

To select Horizontal Airflow SWING Operation

This instructions are applicable to "CEILING TYPE", "FLOOR/CEILING TYPE", "WALL MOUNTED TYPE", and "3D FLOW CASSETTE TYPE".

Press the HORIZONTAL SWING button for more than two seconds.

The remote controller's Horizontal Swing Display will light up. In this mode, the RIGHT/LEFT air direction louvers will swing automatically to direct the airflow both right and left.

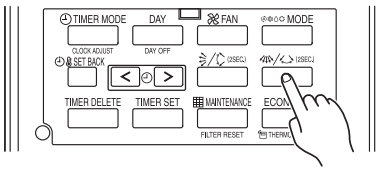

Example : When set to horizontal swing.

To stop Horizontal airflow SWING Operation

Press the HORIZONTAL SWING button for more than two seconds once and again.

The remote controller's Horizontal Swing Display will go out. Airflow direction will return to the setting before swing was begun.

About Horizontal Airflow Swing Operation

- Left and right swing range can be changed in 3 steps by field setting.
- The SWING operation may stop temporarily when the air conditioner's fan is not operating, or when operating at very low speeds.
- The swing operation is not available depending on the model. Please refer to the operating manual for the indoor unit.

Left and right swing range (◆ . . . Factory setting)

	Range of swing	Function Number	Setting Value
◆	① to ⑤ (All range)	24	00
	① to ③		01
	③ to ⑤		02

3-4 ELECTRONIC EXPANSION VALVE CONTROL

1. Initialization

- When the power is turned ON.
- When it has passed the limited time since the last initialization.

2. Operation Control

- When indoor unit stopping by Thermo-OFF condition.

Outdoor unit Condition	EEV Condition
OFF	Fully closed
Cooling	Fully closed
Heating	Slightly open

- When starting up
  (Cooling) Move to the cooling control base pulse in steps.
  (Heating) Move to the heating control base pulse in steps.

- Automatic operatic control
  Automatic PI control is performed based on the indoor unit heat exchanger outlet temp and inlet temp.

- Room temperature control
  The room temperature is controlled so that it reaches to the set-up temperature based on the difference between the room temperature and the set-up temperature, and the change of indoor unit temperature.
  Cooling operation: if the room temperature becomes 0.5℃ lower than the set-up temperature, EEV is fully closed.
  Heating operation: if the room temperature becomes 0.5℃ Higher than the set-up temperature, EEV is slightly opened.
  *In case of protection controlling, EEV keeps open position.

3. Special Control

- Oil recovery operation : Controlled pulse(Maximum 1400 puls)
- Test run operation : Controlled pulse.
- Freeze prevention control : Fully closed.
- Vacuuming operation : Fully open.
- Defrost operation : Controlled pulse(Maximum 1400 puls)

3-5 DRAIN PUMP OPERATION

(1) When cooling and refrigerant circulation starts, the drain pump starts simultaneously.
(2) The drain pump operates continuously for 3 minutes after the refrigerant circulation stopped.
(3) When the refrigent circulation is stopped by a start of indoor heat exchanger frost prevention operation, the drain pump will turn off in 1 hour after the end of indoor heat exchanger frost prevention operation.
(4) When the water level in the drain pan rises up and then the float switch functions:
① Microcomputer stops the refrigerant circulation and indoor fan motor operation.
② Drain pump operates continuously for 3 minutes after the float switch is turned off.
(Almost condensing water may be drained)
(5) When the float switch turns ON continuously for 3 minutes, 'FAILURE INDICATION' operates.
(6) When the float switch turns OFF within 3 minutes, the unit starts cooling operation.

3-4 ELECTRONIC EXPANSION VALVE CONTROL for Outdoor air unit

1. Initialization

- When the power is turned ON.
- When it has passed the limited time since the last initialization.

2. Operation Control

- When indoor unit stopping by Thermo-OFF condition.

Outdoor unit Condition	EEV Condition
OFF	Fully closed
Cooling	Fully closed
Heating	Fully closed

- When starting up
  (Cooling) Move to the cooling control base pulse in steps.
  (Heating) Move to the heating control base pulse in steps.

- Automatic operatic control
  Automatic PI control is performed based on the indoor unit heat exchanger outlet temp and inlet temp.

- Discharge airflow temperature control
  The discharge airflow temperature is controlled so that it reaches to the set-up temperature based on the difference between the discharge airflow temperature and the set-up temperature.
  Cooling operation: 1) If the discharge airflow temperature becomes 5°C lower than the set-up temperature, EEV is fully closed.
  2) If the suction airflow temperature becomes 0.5°C lower than the set-up temperature, EEV is fully closed.
  Heating operation: 1) If the discharge airflow temperature becomes 5°C higher than the set-up temperature for 5 minutes or more, EEV is fully closed.
  2) If the suction airflow temperature becomes 0.5°C higher than the set-up temperature, EEV is fully closed.

3. Special Control

- Oil recovery operation : Controlled pulse(Maximum 1400 puls)
- Test run operation : Controlled pulse.
- Freeze prevention control : Fully closed.
- Vacuuming operation : Fully open.
- Defrost operation : Controlled pulse(Maximum 1400 puls)

3-5 DRAIN PUMP OPERATION for Outdoor air unit

(1) When cooling and refrigerant circulation starts, the drain pump starts simultaneously.
(2) The drain pump operates continuously for 3 minutes after the refrigerant circulation stopped.
(3) When the refrigent circulation is stopped by a start of indoor heat exchanger frost prevention operation, the drain pump will turn off in 1 hour after the end of indoor heat exchanger frost prevention operation.
(4) When the water level in the drain pan rises up and then the float switch functions:
① Microcomputer stops the refrigerant circulation and indoor fan motor operation.
② Drain pump operates continuously for 3 minutes after the float switch is turned off.
(Almost condensing water may be drained)
(5) When the float switch turns ON continuously for 3 minutes, 'FAILURE INDICATION' operates.
(6) When the float switch turns OFF within 3 minutes, the unit starts cooling operation.

3-6 FUNCTION

3-6-1 Auto Restart

The air conditioner restarts with the previous setting operation.

3-6-2 Freeze Prevention Control

The icing of the indoor heat exchanger is prevented during the cooling and dry mode operation.

(1) Starting Condition
- Compressor is operation more than 3 minutes.
  When "Heat exchanger inlet temperature ≦ T_A" continues *4 minutes or more.
- Compressor is operation more than 3 minutes.
  When "Heat exchanger outlet temperature ≦ T_A" continues 4 minutes or more.

(2) Operation
EEV is closed.
Fan is at the setting amount.

(3) Completing Condition
Heat exchanger inlet and middle temperature ≧ T_B
After more than 5 minutes

* Drain pump turns off at 60 minutes past the completion of the icing protection operation.

T_A	T_B
1°C	7°C

3-6-3 Oil Recovery Operation / Defrost Operation

[Oil recovery operation / Defrost operation] :
It periodically returns the residual refrigerant ion oil in the indoor unit and the connection piping back to the outdoor unit , and prevents the compressor oil level from decreasing.

Indoor unit LED : Operation LED

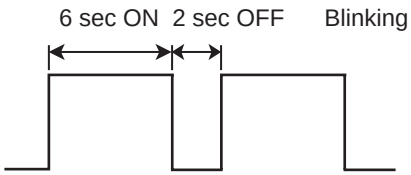

Indoor fan : Same operation before oil recovery operation in cooling operation or dry operation.(Heating operation: Stop)
Indoor EEV : Control pulse
* During the above operation, a refrigerant noise might hear from the indoor unit.

3-6-4 Outdoor temperature protected operation for Outdoor air unit

1. COOL OPERATION

The contents of operation is controlled as following based on the suction airflow temperature.

a) Operation mode management is made "Management by indoor unit", and outdoor air unit is master indoor unit.

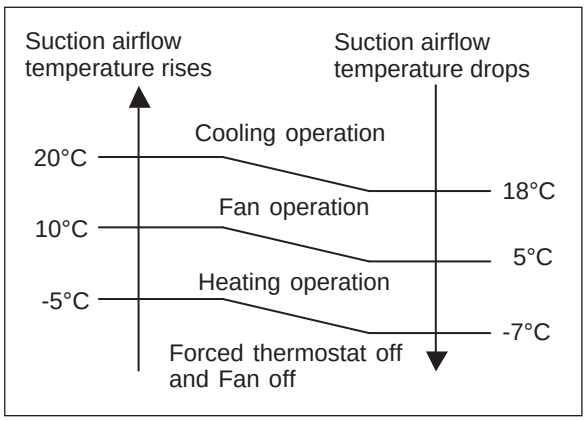

b) Cases Other than (a)

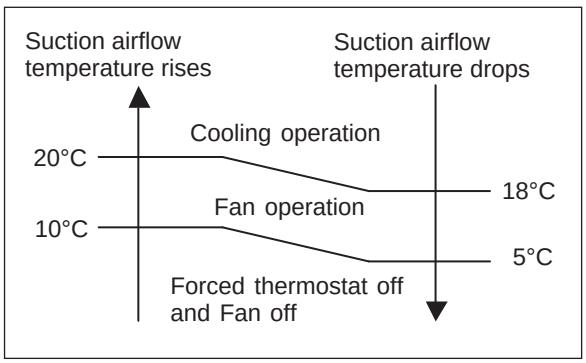

2. HEAT OPERATION

The contents of operation is controlled as following based on the suction airflow temperature.

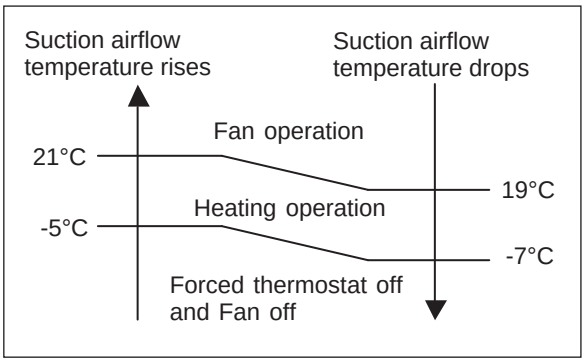

3. FAN OPERATION

The contents of operation is controlled as following based on the suction airflow temperature.

a) Operation mode management is made "Management by indoor unit", and outdoor air unit is master indoor unit.

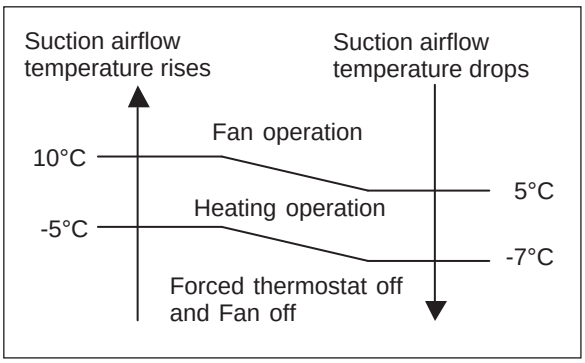

b) Cases Other than (a)

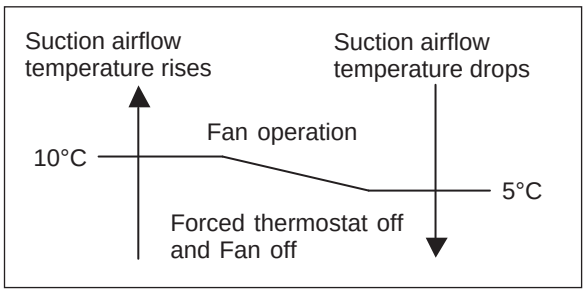

RB UNIT OPERATION

3-7 RB UNIT COMPORNENT

3-7-1 Position of Solenoid coil

Single type

UTP-RX01AH

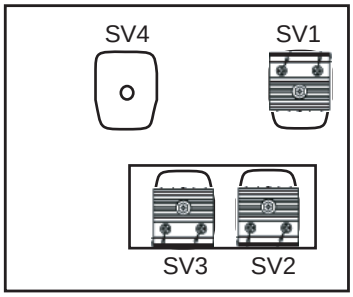

UTP-RX01BH

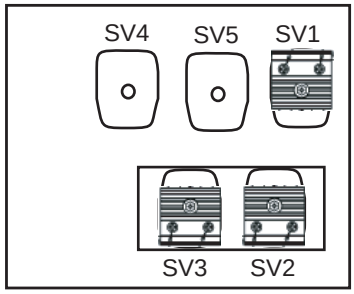

UTP-RX01CH

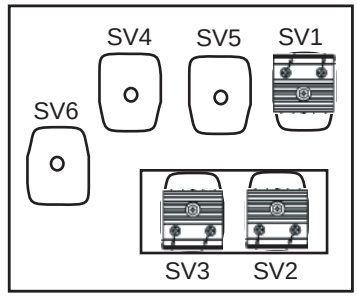

Multi type

UTP-RX04BH

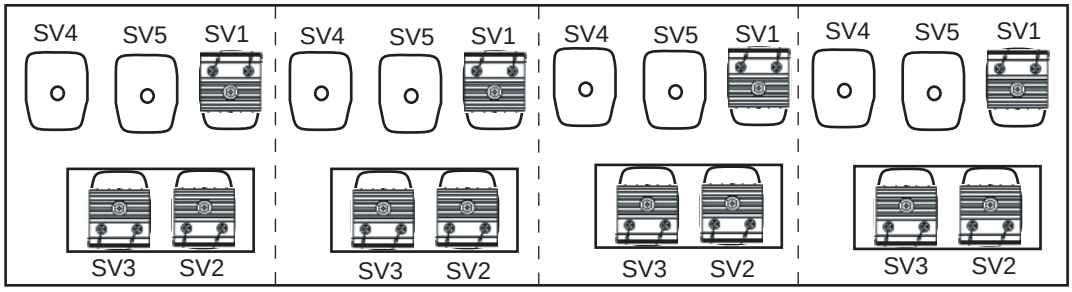

Color of Connector

SV1	Green
SV2	Blue
SV3	Black
SV4	White
SV5	Red
SV6	Yellow

UTP-RX08AH

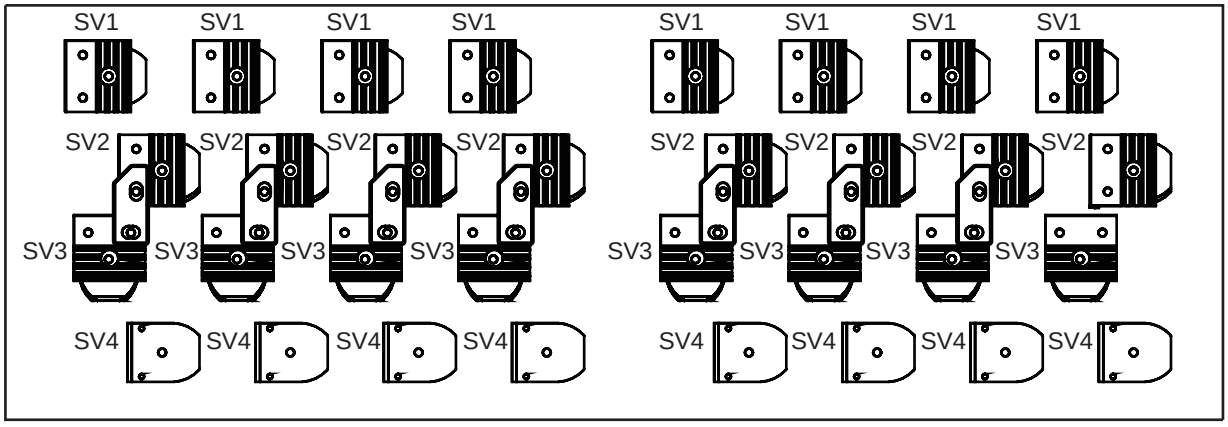

UTP-RX12AH

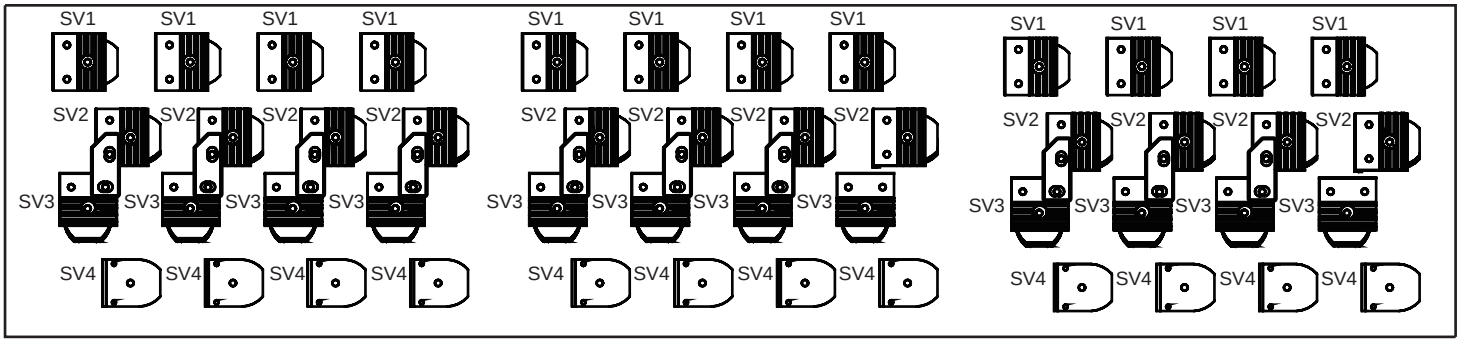

3-7-2 Position of Solenoid valve

( ) : Indication on the Service Tool

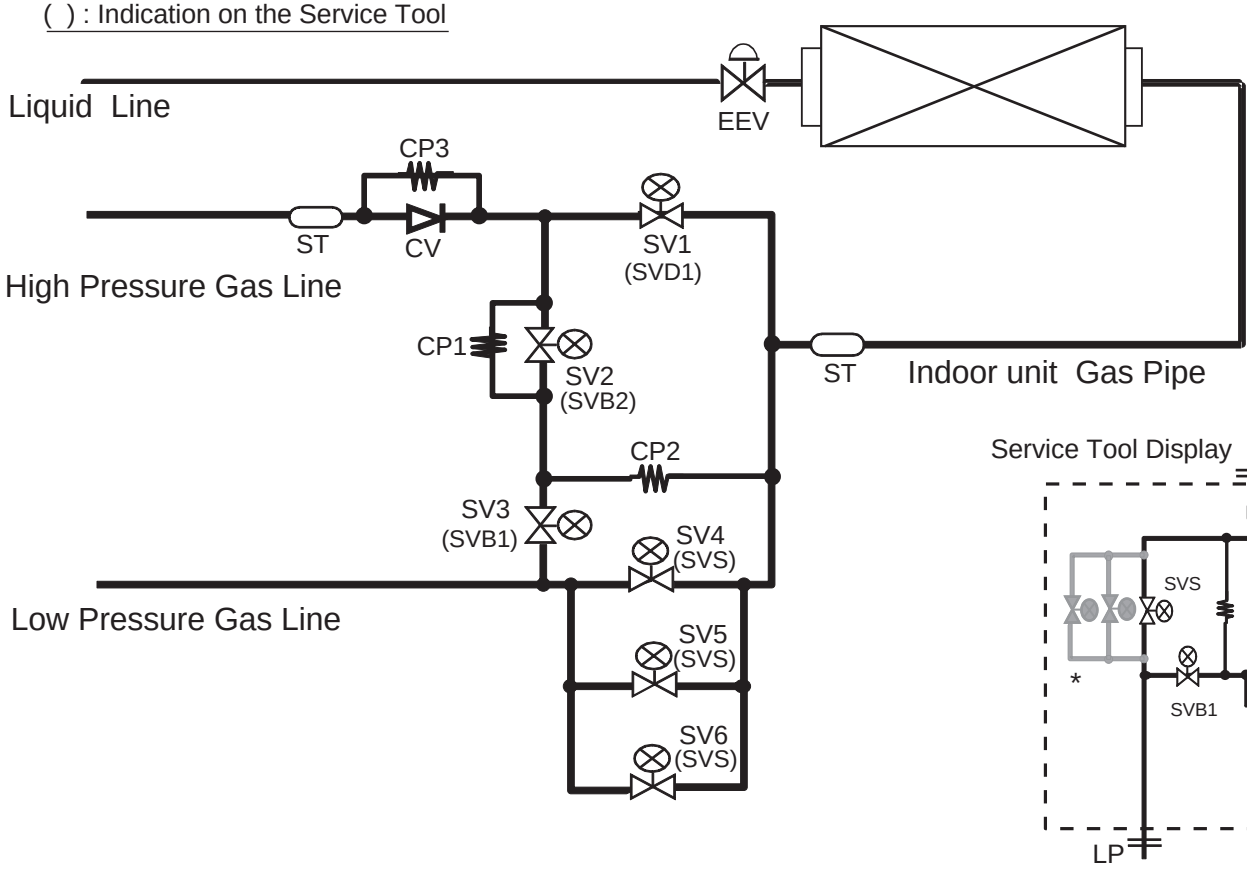

*SV5, SV6 are not indicated on the Service tool

3-7-3 PCBs layout

Single type : UTP-RX01AH
UTP-RX01BH
UTP-RX01CH

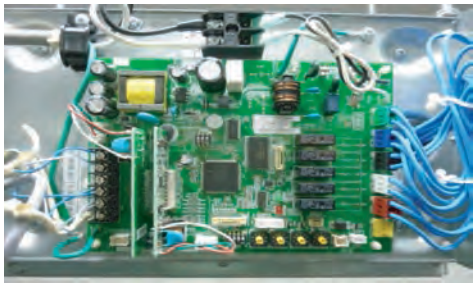

Multi type : UTP-RX04BH

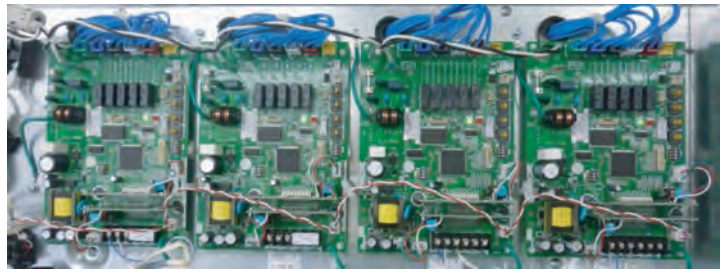

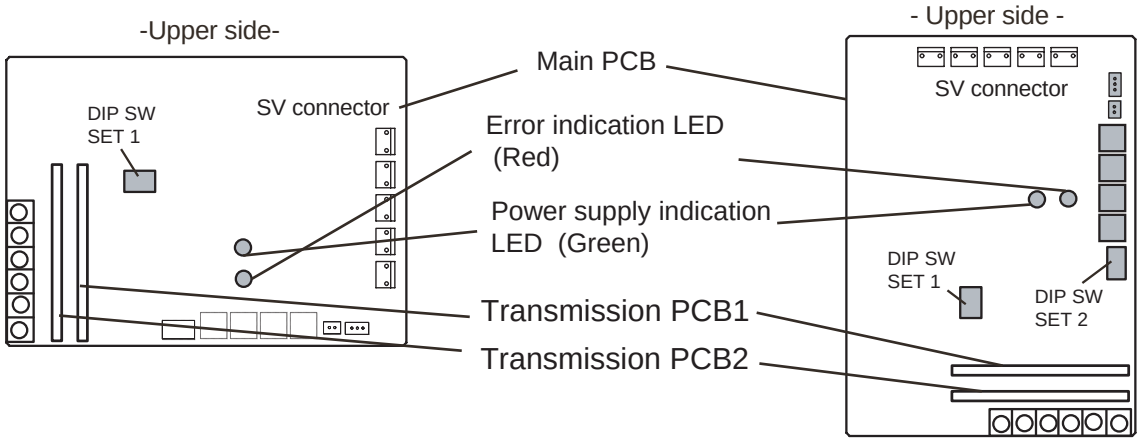

Multi type : UTP-RX08AH

(POWER SUPPLY PCB)

(MAIN PCB)

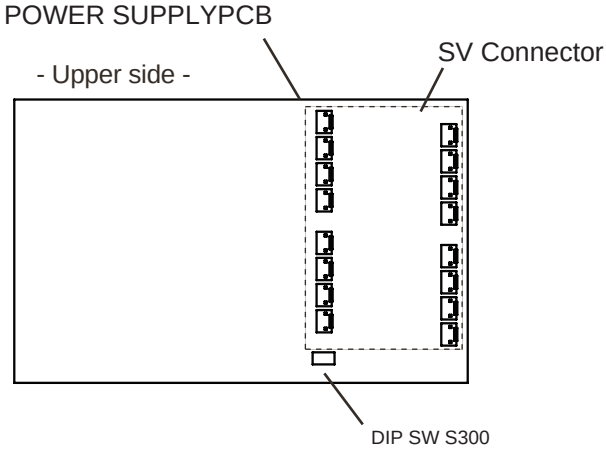

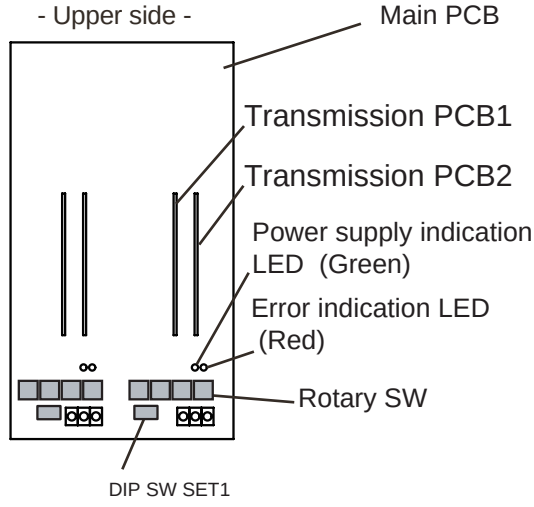

Multi type : UTP-RX12AH

(POWER SUPPLY PCB)

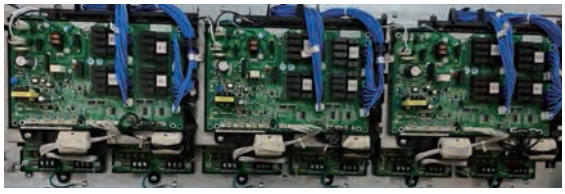

(MAIN PCB)

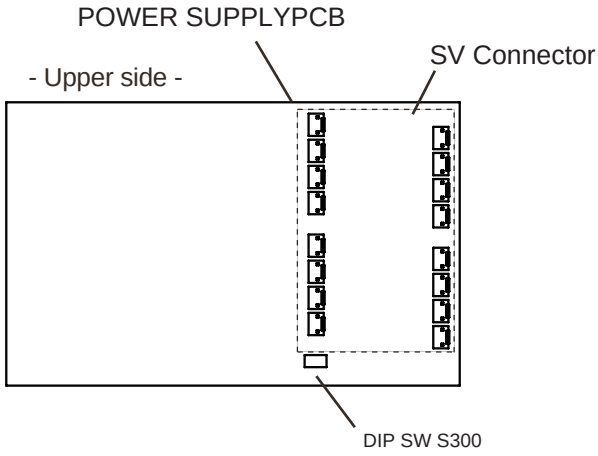

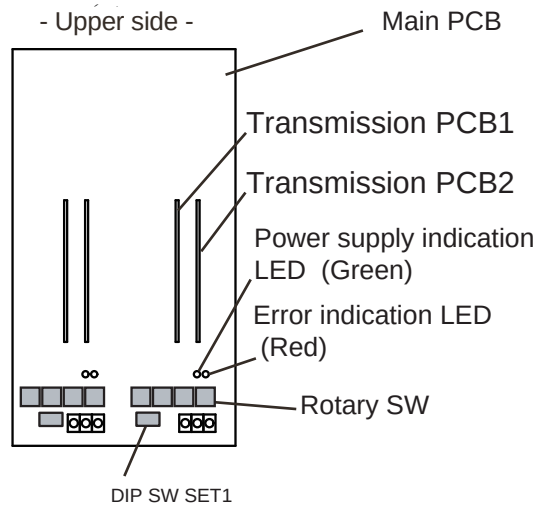

3-7-4 PCB component

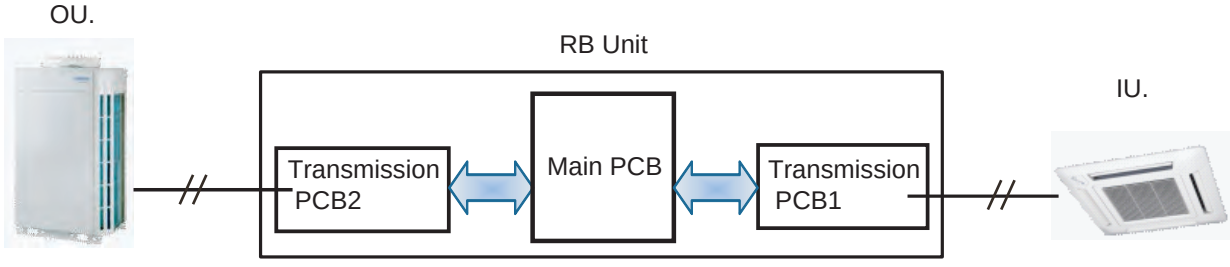

Main PCB: Pulse signal communication between Transmission PCB1 and Transmission PCB2
Transmission PCB1: Pulse signal communication between IU. and RB Main
Transmission PCB2: Pulse signal communication between OU. and RB Main

*The transmission PCB1 and The transmission PCB2 are the same part.
- Caution -
When the Main PCB is newly installed to the RB unit, the address setting is required.
The RBG Address number has to be set as the same address of connecting indoor unit.
(When a connection port of RB unit has a multi indoor unit connection, the younget address number of indoor unit has to be given to the main PCB of RB.)

3-7-5 Solenoid Valve controlling

Open / Close operation in Operation

SV No.	Function	Cooling / Dry mode	Heating mode	Fan mode / Stop
SV1 (SVD1)	Discharge Valve	Close	Open	Close
SV4 - 6 (SVS)	Suction Valve	Open	Close	Close
SV2 (SVB2)	Equalization Valve (Pressurization)	Close	Open	Close
SV3 (SVB1)	Equalization Valve (Decompression)	Open	Close	Open

(Indication on Service Tool)

Open / Close operation in Special operation

SV No.	Function	Defrost	Oil Recovery	Vacuuming Mode	IU. Freeze Prevention	Compressor Stop by protection
SV1 (SVD1)	Discharge Valve	Close	Close	Open	Close	Close
SV4 - 6 (SVS)	Suction Valve	Open	Open	Open	Close	Close
SV2 (SVB2)	Equalization Valve (Pressurization)	Close	Close	Open	Close	Close
SV3 (SVB1)	Equalization Valve (Decompression)	Open	Open	Open	Open	Open

Open / Close operation during heating operation

	Current model				New model	
	UTP-RX01AH	UTP-RX01BH	UTP-RX01CH	UTP-RX04BH	UTP-RX08AH	UTP-RX12AH
SV1	Open	Open	Open	Open	Open	Open
SV2	Open	Open	Open	Open	Open→Close※	Open→Close※
SV3	Close	Close	Close	Close	Close	Close
SV4	Close	Close	Close	Close	Close	Close
SV5	-	Close	Close	Close	-	-
SV6	-	-	Close	-	-	-

※ The solenoid valve(2) turns off 300 seconds after the start of heating operation.

Reson : To prevent temperature rise of the solenoid valve coil.

3-7-6 Refrigerant Flow

- Cooling operation -

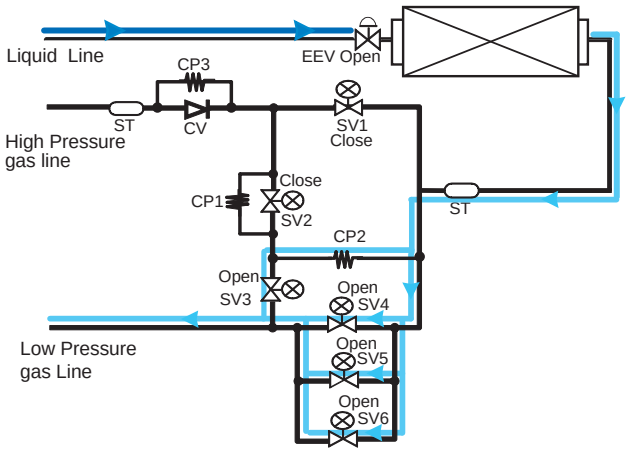

- Heating operation -

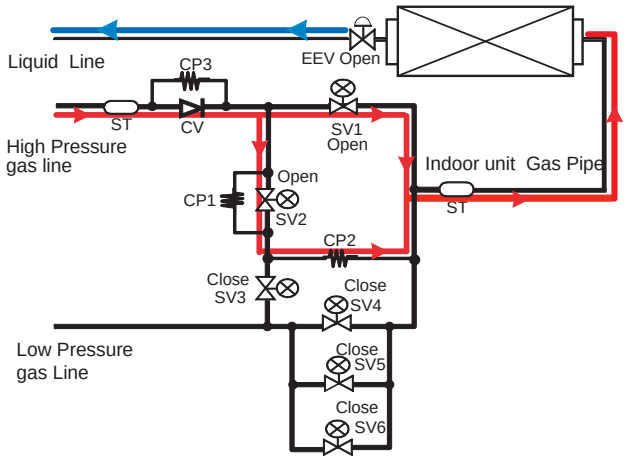

- Preparation for mode changing -

EX) Cooling operation ⇒ Heating operation

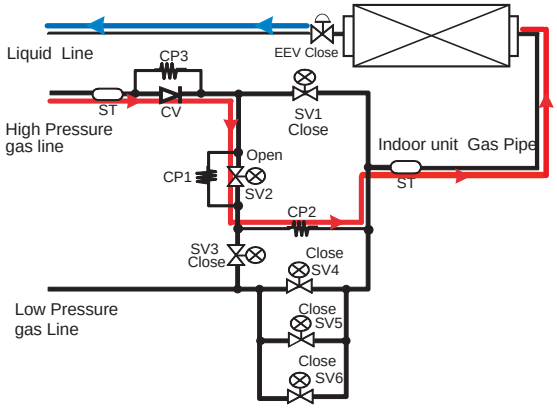

Note:

The preparation for mode changing takes a little time (about 6 minutes).
By changing DIP-SW (SET4-3) to ON, the time for the mode selection controlling will be shorter (3 minutes).
If the mode selection control time is short, the soud of refrigerant may be loud during cool to heat selection control process.

3-8 DX-KIT

3-8-1 SYSTEM CONFIGURATION

1. FGL remote/controller connection

The DX kit is controlled by a VRF operation device and use the external output of the DX kit to performe the AHU operation indirectly.

Control devices can be unified with FGL devices.

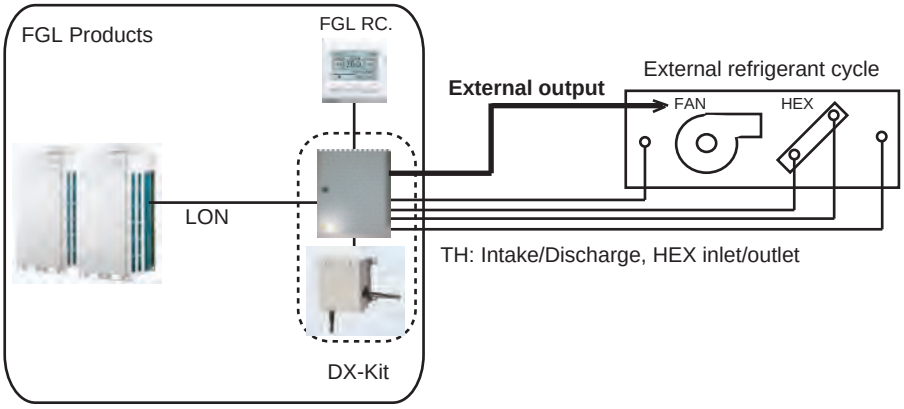

Interface	Contents
External input	FAN abnormal intput
External output	Fan ON/OFF
	Thermostat ON/OFF

2. External controller connection

Air conditioning control (thermostat-control) can be designed on-site.
(Air conditioning control by DX is also possible.)
Control equipment suited to the application can be connected.

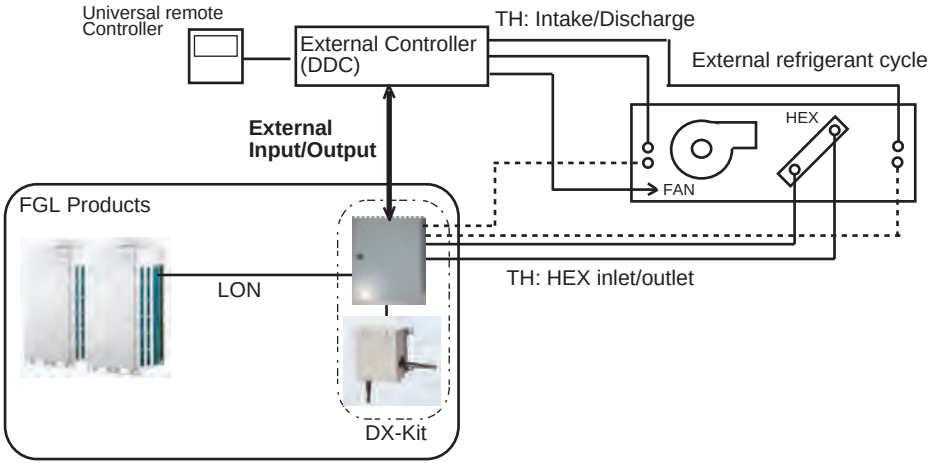

Interface	Contents	Remarks
External input	Operation ON/OFF	
	Operation mode Cool/Heat	Typical indoor unit is required for mode changing.
	Set temperature or capacity request (Analog input)	Temperature setting: When thermo-control is performed by DX kit. Capacity request: When the thermo-control is performed by external controller.
	Error	Information on error occurred at external controller
External output	Operation ON/OFF	
	Error	Information on error occurred at VRF system
	Special operation (defrost)	The Fan operation can be stopped with the communication siginal of special operation

3-8-2 FUNDAMENTAL FUNCTIONS

1. FGL remote/controller connection

Air conditioning control system (SET3-3)	Intake temperature control	Discharge temperature control
Set temperature objective	Intake temperature (Room temperature) Cooling: 18 to 30℃ Heating: 10 to 30℃	Discharge temperature Cooling: 14 to 25℃ Heating: 17 to 28℃
Thermostat OFF conditions	Cooling Intake temperature < Setting temperature -0.5℃ Heating Intake temperature > Setting temperature +0.5℃	Cooling Discharge temperature < Setting temperature -5.0℃ Heating Discharge temperature > Setting temperature +5.0℃ for 5 minutes
Operation (ON/OFF/Mode/ Set temperature	FGL controller	
Fan control	Fan control commands are output from the DX kit external output terminal	

2. External controller connection

Air conditioning control system (SET3-3)		Intake temperature control	Outlet temperature control
Analog input system (SET3-2)		Set temperature input / Capacity input Selection	Set temperature input / Capacity input Selection
Temperature setting	Temperature Setting range	Intake temperature (Room temperature) Cooling: 18 to 30℃ Heating: 10 to 30℃	Discharge temperature Cooling: 14 to 25℃ Heating: 17 to 28℃
Temperature setting	Thermostat OFF conditions	Cooling Intake temperature < Setting temperature -0.5℃ Heating Intake temperature > Setting temperature +0.5℃	Cooling Discharge temperature < Setting temperature -5.0℃ Heating Discharge temperature > Setting temperature +5.0℃ for 5 minutes
Capacity input	Capacity input range	0%, 5% to 100%	
Capacity input	Thermostat OFF conditions	Controlled by external controller and EEV closed by making the capacity input 0% in cooling mode. EEV slightly opened when the Compressor operating in heating mode	
Operation (ON/OFFMode/ Set temperature		Controlled by external controller, input to DX Kit external input terminal *Operation from FGL controller is disabled. (Only monitoring is possible)	
When error generated at external equipment		When fanmotor locked or another error was generated at the external equipment, the refrigerant cycle is stopped by inputting an error signal to the DX Kit external input terminal. (EEV is Closed)	
Fan control		Control is perfomed by external equipment, but when you want to stop the fan during defrosting, use the defrost signal that is output from the DX Kit external output terminal.	

Cooling operation

When using the cooling mode, set the temperature to a value lower than the target controlling temperature, otherwise the External refrigeration cycle equipment will not start the cooling operation.

An example for COOLING TEMPERATURE CONTROL time chart

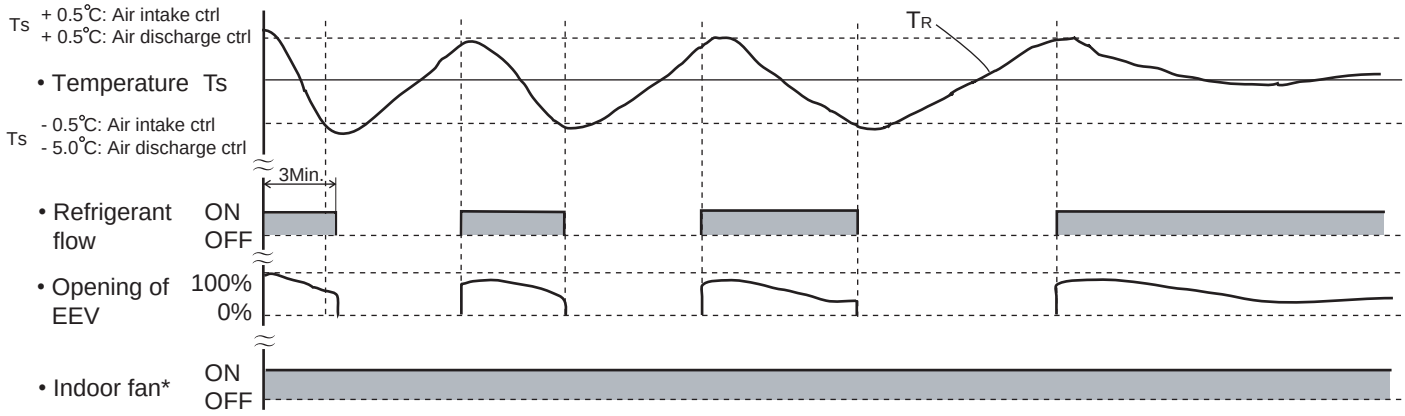

TR: Target controlling temperature (Air intake temperature or Air discharge temperature)
Ts: Corrected Setting temperature

Air intake temp controlling

Ts + 0.5 ℃: The threshold temperature of start of refrigerant flow
Ts - 0.5 ℃ : The threshold temperature of stop of refrigerant flow

Air discharge temp controlling

Ts + 0.5 ℃: The threshold temperature of start of refrigerant flow
Ts - 5.0 ˚C: The threshold temperature of stop of refrigerant flow

Heating operation

(1) When using the heating mode, set the temperature to a value higher than the current room temperature, otherwise the indoor unit will not start the heating operation.
(2) After the start of heating operation, the fan of indoor unit will not rotate until the heater exchange is warmed up to blow out warm air.
(3) During defrosting, the OPERATION indicator lamp flashes 6 sec. ON and 2 sec. OFF, and repeat. The heating operation will be temporarily interrupted.

An example for HEATING TEMPERATURE CONTROL time chart

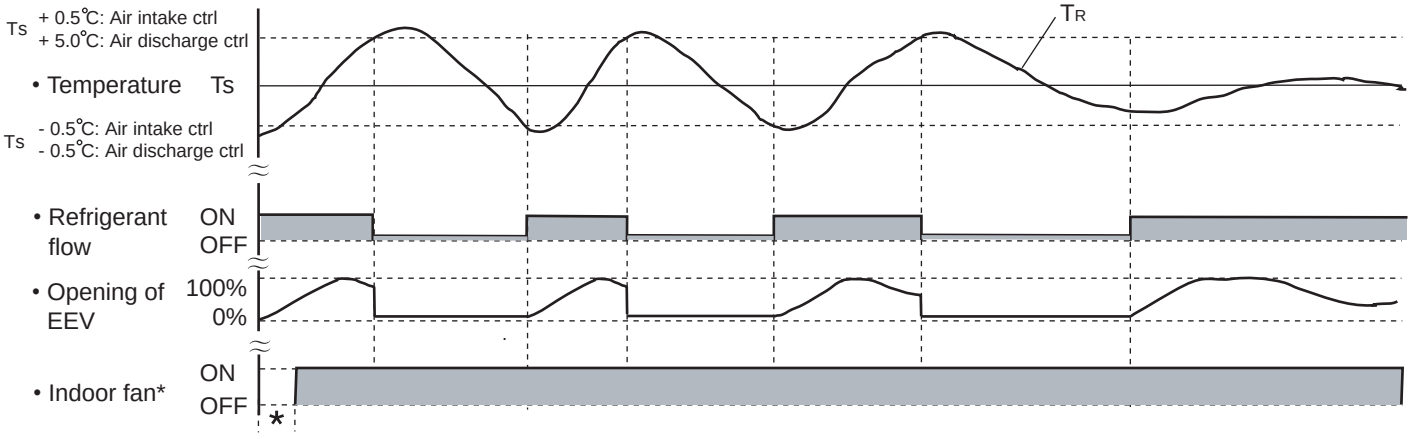

Ts : Corrected Setting temperature * : Duration of cold air prevention
TR : Target controlling temperature (Air intake temperature or Air discharge temperature)

Air intake temp controlling

Ts - 0.5 ℃: The threshold temperature of start of refrigerant flow
Ts + 0.5 ˚C: The threshold temperature of stop of refrigerant flow

Air discharge temp controlling

Ts - 0.5 ℃: The threshold temperature of start of refrigerant flow
Ts + 5.0 ˚C: The threshhold temperature of stop of refrigerant flow

*When the EEV operates with the minimum pulse, and it keeps for 5 minutes.

3-8-4 ELECTRICAL EXPANSION VALVE CONTROL for DX-KIT

1. Initialization

- When the power is turned ON.
- When it has passed the limited time since the last initialization.

2. Operation Control

- When indoor unit stopping by Thermo-OFF condition.

Outdoor unit Condition	EEV Condition
OFF	Fully closed
Cooling	Fully closed
Heating	Fully closed

- When starting up
  (Cooling) Move to the cooling control base pulse in steps.
  (Heating) Move to the heating control base pulse in steps.

- Automatic operatic control
  Automatic PI control is performed based on the indoor unit heat exchanger outlet temp and inlet temp.

- Discharge airflow temperature control
  The discharge airflow temperature is controlled so that it reaches to the set-up temperature based on the difference between the discharge airflow temperature and the set-up temperature.
  Cooling operation: 1) If the discharge airflow temperature becomes 5°C lower than the set-up temperature, EEV is fully closed.
  2) If the suction airflow temperature becomes 0.5°C lower than the set-up temperature, EEV is fully closed.
  Heating operation: If the suction airflow temperature becomes 0.5°C higher than the set-up temperature, EEV is fully closed.

3. Special Control

- Oil recovery operation : Controlled pulse(Maximum 1400 puls)
- Test run operation : Controlled pulse.
- Freeze prevention control : Fully closed.
- Vacuuming operation : Fully open.
- Defrost operation : Controlled pulse(Maximum 1400 puls)

3-8-5 DARIN PUMP OPERATION for DX-KIT

(1) When cooling and refrigerant circulation starts, the drain pump starts simultaneously.
(2) The drain pump operates continuously for 3 minutes after the refrigerant circulation stopped.
(3) When the refrigent circulation is stopped by a start of indoor heat exchanger frost prevention operation, the drain pump will turn off in 1 hour after the end of indoor heat exchanger frost prevention operation.
(4) When the water level in the drain pan rises up and then the float switch functions:
① Microcomputer stops the refrigerant circulation and indoor fan motor operation.
② Drain pump operates continuously for 3 minutes after the float switch is turned off. (Almost condensing water may be drained)
(5) When the float switch turns ON continuously for 3 minutes, 'FAILURE INDICATION' operates.
(6) When the float switch turns OFF within 3 minutes, the unit starts cooling operation.

3-8-6 FUNCTION

Auto Restart

The air conditioner restarts with the previous setting operation.

Freeze Prevention Control

The icing of the indoor heat exchanger is prevented during the cooling and dry mode operation.

(1) Starting Condition
- Compressor is operation more than 3 minutes.
  When "Heat exchanger inlet temperature ≦ T_A" continues *4 minutes or more.
- Compressor is operation more than 3 minutes.
  When "Heat exchanger outlet temperature ≦ T_A" continues 4 minutes or more.

(2) Operation
EEV is closed.
Fan is at the setting amount.

(3) Completing Condition
Heat exchanger inlet and middle temperature ≧ T_B
After more than 5 minutes

* Drain pump turns off at 60 minutes past the completion of the icing protection operation.

T_A	T_B
1°C	7°C

Oil Recovery Operation / Defrost Operation

[Oil recovery operation / Defrost operation] :
It periodically returns the residual refrigerantion oil in the indoor unit and the connection piping back to the outdoor unit, and prevents the compressor oil level from decreasing.

IR Receiver Unit LED: Operation LED

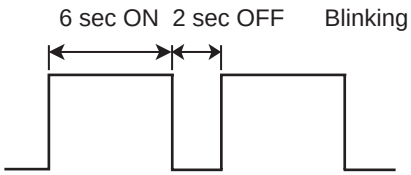

FAN output: Same operation before oil recovery operation in cooling operation or dry operation.(Heating operation: Stop)
DX-KIT EEV: Control pulse
* During the above operation, a refrigerant noise might hear from the EEV Kit.

Refrigerant R410A INVERTER

AIRSTAGE™ VR-IV

Variable Refrigerant Flow System

4. TROUBLE SHOOTING

4. TROUBLESHOOTING

4-1 NORMAL OPERATION

4-1-1 Indoor Unit Display

Indication type	Indication Lamp	Flashing Pattern
Operation	Operation LED	Continuous lighting
Anti Freeze		Continuous lighting(lowered light)
Timer	Timer LED	Continuous lighting(lowered light)
Filter	Filter LED	Continuous lighting
Power Failure	Operation LED	
	Timer LED	
Test Operation	Operation LED Timer LED	
Defrosting	Operation LED	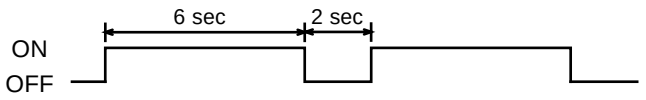
Oil Recovery		
Opposite Operation Mode	Timer LED	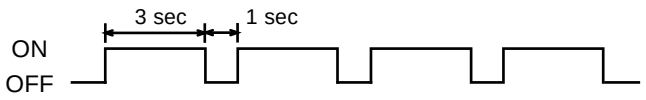
Maintenance Mode	Operation LED Timer LED Filter LED	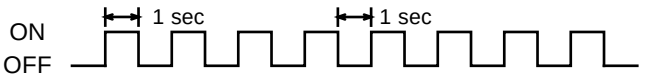
Location Notification	Operation LED Timer LED Filter LED	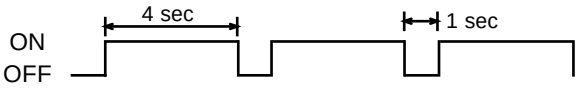 This function is only available on the 2 wires remote controller. Please refer to the installation manual of UTY-RNR*

4-1-2 OUTDOOR UNIT DISPLAY

Indication type	7 Segment LED Pattern	Description
Idling(stop)	Blank	
Cooling Mode (Mainly Cooling)	"C" OO "L"	
Heating Mode (Mainly Heating)	"H" EA "T"	
Oil Recovery Operation	"O" IL "R" ECOVERY	Refer to Chapter 02. (Outdoor unit operation control)
Defrost Operation	"D" E "F" ROST	Refer to Chapter 02. (Outdoor unit operation control)
Discharge Temp. Protection is stopped	"P" ROTECT "1"	<Starting condition> Discharge temp ≧ fixed value 115°C <Release condition> 3 minutes have elapsed and discharge temperature ≦ 80°C
High Pressure Protection is stopped	"P" ROTECT "2"	<Starting condition> High pressure ≧ 4.00MPa or Pressure SW in operation <Release condition> 5 minutes have elapsed and high pressure ≦ 3.50MPa and Pressure SW release
Low Pressure Protection is stopped	"P" ROTECT "3"	<Starting condition> Low pressure ≦ 0.05MPa or low pressure ≦ 0.10MPa continues for 10 mins <Release condition> 3 minutes have elapsed and low pressure ≧ 0.17MPa
Compressor Temperature Protection is stopped	"P" ROTECT "4"	<Starting condition> Compressor temp ≧ fixed value 115°C <Release condition> 3 minutes have elapsed and discharge temperature ≦ 80°C
Compression Ratio Protection is stopped	"P" ROTECT "7"	<Starting condition> When the compressor is operating at the minimu rotation speed and the compression ratio exceeds 8.0 and the operation continues for 3 minutes or more. <Reset condition> When the compression ratio is 8.0 or less and 3 minutes have passed.
Peak Cut Mode	"P" eak "C" ut	
Low Noise Mode	"L" OW "N" OISE	Refer to Chapter 02. (Outdoor unit operation control)
Snow Falling Protection Fan mode	"SN" OW	Refer to Chapter 02. (Outdoor unit operation control)
Inverter Compressor Operation Indication	Blinking	ON / OFF — 1 sec, 1 sec

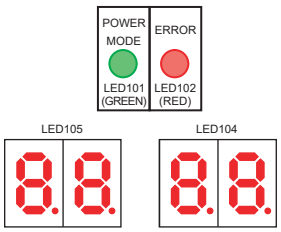

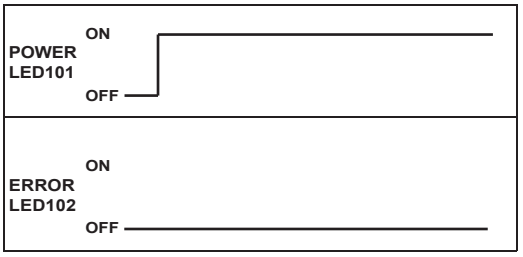

4-2 ABNORMAL OPERATION

4-2-1 Error code Display

An Error code is represented by 3 digit characters.
The first 2 digit means the subsection Error code, and the last 1 digit means the specifics Error code.

Ex.) Indoor unit Network communication Error

1 4 . 3

Subsection Error Code — 14 : Network communication Error

Specifics Error Code — 3 : Indoor unit Network Communication Error

Each Error code section is shown by the following target

Subsection Error Code target	Subsection and Specifics Error code target
- Indoor unit (Operation / Timer / Filter) LED - 2 / 3 Wires Remote controller - Simple Remote controller - Group Remote controller - Central Remote controller - Touch - Panel Controller	- Outdoor unit 7 segment Display - Service Tool

When an Error occurs, each devices indicate own abnormal detecting condtion.
In order to confirm the actual error condition, the following procedure are required.

1) Confirm the Specific Error code on the Outdoor unit 7 segment display or the Service tool.
   Ex.1.) When the wired remote controller shows " 9 U (Outdoor unit Error)".
   Ex.2*.) When the wired remote controller shows " 4 2 (Indoor unit Heat-Ex Sensor Error)"
   *The Specific Error code can be indicated by service tool.
2) Confirm each Error code on each devices in case of Network communication Error.
   Ex.) When the Network cable of indoor unit 00 disconnected during operating.

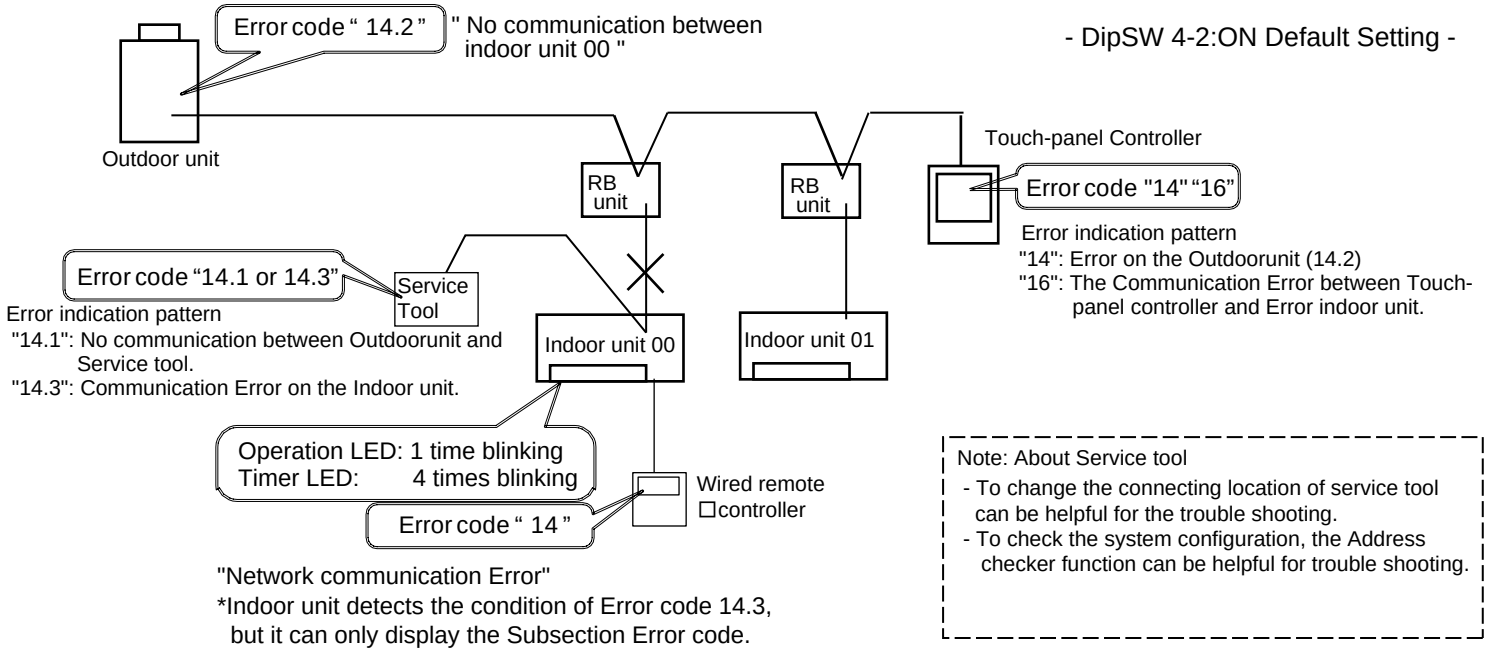

4-2-2 Indoor Unit Display

Error Indication Flashing Pattern

Example : Indoor Unit Main PCB Error (Operation LED : 3 times, Timer LED : 2 times)

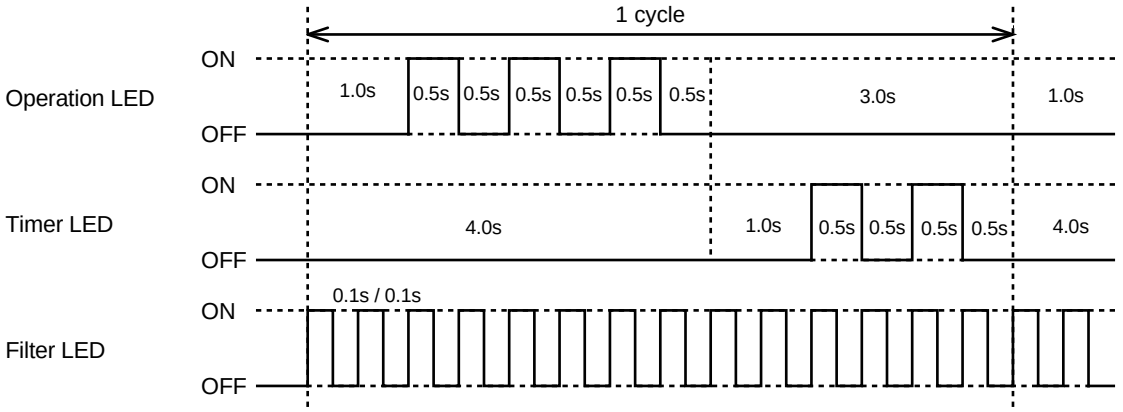

4-2-3 Outdoor Unit Display

LED display

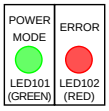

POWER MODE LED : on
ERROR LED : blink

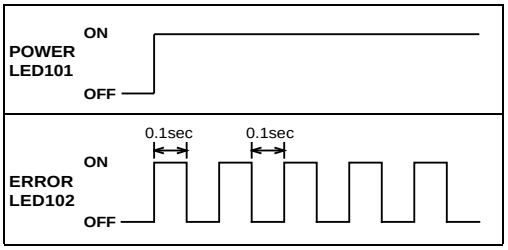

Operation button

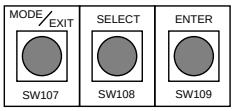

ERROR transition

Short press : less than 3 seconds
Long press : more than 3 seconds

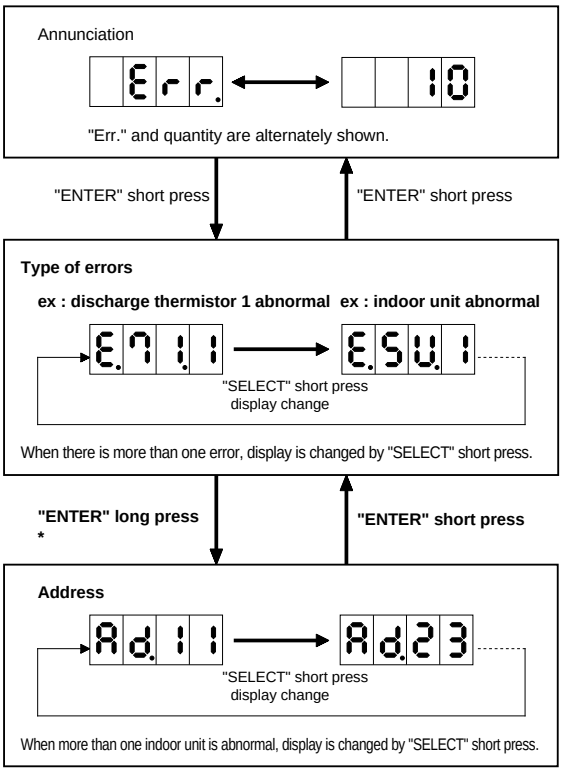

If some error is newly occured or resolved during transition, it is reflected after going back to "Annunciation".

* Only in the case of "indoor unit abnormal (E.5U.1)", indoor unit address is shown by ENTER long press.

4-2-4 Remote Controller Display

<< *SIMPLE REMOTE CONTROLLER* >>

ERROR CODE DISPLAY

If an error occurs, the following display will be shown.
(" Er " will appear in the set room temperature display.)
If " Er " is displayed, immediately contact authorized service personnel.

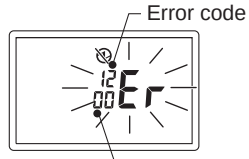

Ex. Error code display

<< *WIRED REMOTE CONTROLLER* 3 wire type>>

ERROR CODE DISPLAY

If an error occurs, the following display will be shown.
(" Er " will appear in the set room temperature display.)
If " Er " is displayed, immediately contact authorized service personnel.

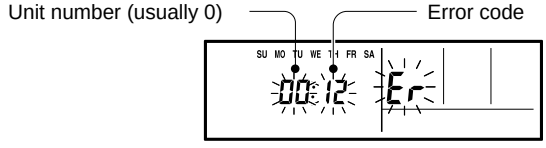

Ex. Error code display

<< *WIRED REMOTE CONTROLLER* 2 wire type>>

If an error occurred, an error icon appears on the Monitor mode screen.

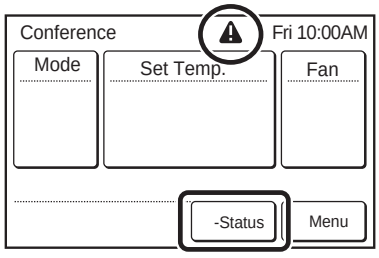

1. Touch the [Status] on the Monitor mode screen.

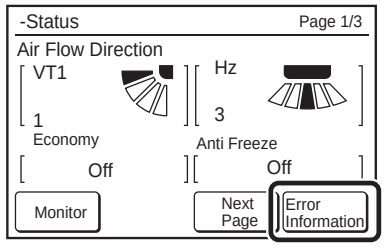

2. Touch the [Error Information] on the Status screen.

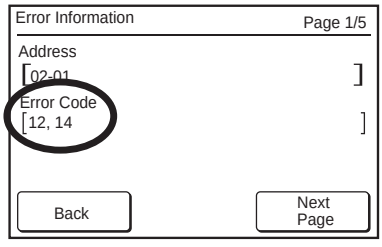

2-digit numbers are corresponding to the error code

<< *GROUP REMOTE CONTROLLER* >>

ERROR CODE DISPLAY

The air conditioning system must be inspected if " E : " (error code) appears on the timer and Clock Display, or the operation lamp is flashing.

*1 ; Model code
- 0 : Outdoor unit
- 1 : Indoor unit
- C : Group remote controller
- A : Convertor

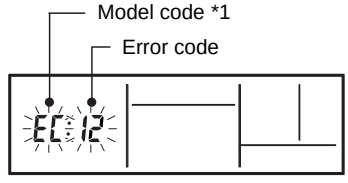

Ex. Error code display

4-2-5 Trouble shooting index - Error code List 1/2 -

Display Target A	Display Target B	Display Target C	Display Target D
Simple Wired remote controller 2 / 3 wires Wired remote controller Indoor unit LED brinking times, " 1st figure: Operation LED, 2nd figure: Timer LED"	Group Remote controller Central Remote controller Touch- Panel controller	7 seg. Display on Outdoor unit Controller PCB	Service Tool

*: No Display **A**: LED 10 times Blinks **J**: LED 13 times Blinks **U**: LED 15 times Blinks

Display Target A	Display Target B	Error Contents < Subsection >	Display Target C	Display Target D	Error Contents < Supecifics >	Trouble shooting No.
12		Remote controller Communicaction Error	5 U.1	12.1	Wired Remote Controller communication Error	1
				12.2	Wired Remote Controller singnal error (3 wires RC)	2
				12.3	Number Excess of device in Wired RC. System (2 Wires RC)	3
9U	13	Communication Error between Outdoor unit	13.1		Communication Error Between Outdoor unit	4
14 *	14 16	Network Communication Error	14.1	14.1 14.3	Outdoor unit Network communication 1 Error	5
14 9U	14 16		14.2	14.2 14.1 14.3	Outdoor unit Network communication 2 Error	6
14 9U *	14 16		14.1 14.2	14.3 14.1 14.2	Indoor unit Network communication Error	7
9U *	14 16		14.5	14.5 14.3	The number of indoor unit shortage Error	8
16		Peripheral device communication Error	14.1	14.3	Transmission PCB connection Error	9
*			14.2		Communication Error between Controller and Indoor unit	10
9U	22 24	Error at indoor unit connection check	22.1		Connecting indoor units capacity error	93
			24.2		Connecting number of indoor unit error	
	26	Address settingError	26.1		Dual address number is existing	
			26.4		Address duplication in Wired remote controller system	11
			26.5		Address setting Error in Wired remote controller system	12
*		Other setting Error	28.1	*	Auto address setting Error	13
			28.4	*	Signal amplifier auto address Error	14
29		Connection unit number error in wired remote controller system	5U.1	29.1	Connection unit number Error (Indoor unit in WRC control system)	15
29	*		*	*	Connection unit number Error (Remote controller)	16
31		Indoor unit Power supply Abnormal	5U.1	31.3	Indoor unit power frequency Abnormal	17
32		Indoor unit Main PCB Error		32.1	Indoor unit PCB Model informaiton Error	18
				32.3	Indoot unit EEPROM access Error	19
3A		Indoor unit communication circuit (WRC) error	5U.1	3A.1	Indoor unit communication circuit (WRC) microcomputers communication error	20
41		Indoor unit Room temp. Sensor Error		41.1	Indoor unit Inlet air temp. Sensor Error	21
42		Indoor unit Heat-Ex. Sensor Error		42.1	Indoor unit Heat-Ex. Inlet temp. Sensor Error	22
				42.3	Indoor unit Heat-Ex. Outlet temp. Sensor Error	23
51		Indoor unit FAN Motor 1 Error		51.2	Indoor unit FAN Motor 1 rotation speed Error	24
52		Indoor unit Coil (EEV) Error		52.1	Indoor unit Coil 1 (EEV) Error	25
53		Indoor unit water drain Abnormal		53.1	Indoor unit Drain pump Error	26
*		Indoor unit Error		*	Indoor unit Error	Refer to I.U Error
57		Damper error	57.1		Damper (Open / Close) detection limit switch error	91
			57.2			
			57.3		Damper (Open / Close) simultaneous detection limit switch error	92
9U	61	Outdoor unit Power supply Abnormal	61.5		Outdoor unit reverse phase, missing phase wire Error	27
	62	Outdoor unit PCB Error	62.3		Outdoor unit EEPROM access Error	28
			62.6		Inverters communication Error	29
			62.8		EEPROM data corrupted Error	30
	63	Outdoor unit Inverter PCB Error	63.1		Inverter Error	31
*	*	OU. short interruption detection protected operation	67.2		Inverter PCB short interruption Error	32
9U	68	Outodoor unit Magnetic relay Error	68.2		Rush Current limitting resistor temp. rise protection	33
9U	69	Outdoor unit Transmission PCB Error	69.1		Outdoor unit transmission PCB Parallel communication Error	34
14	14		69.1	14.1 14.3		
9U	71	Outdoor unit Discharge temp. Sensor Error	71.1		Discharge temp.Sensor 1 Error	35
	72	Outdoor unit Compressor temp. Sensor Error	72.1		Compressor temp. Sensor 1 Error	36
	73	Outdoor unit Heat-Ex. temp. Sensor Error	73.4		Heat-Ex 1 gas temp. Sensor Error	37
			73.5		Heat-Ex 1 liquid temp. Sensor Error	38
			73.6		Heat-Ex 2 gas temp. Sensor Error	39
			73.7		Heat-Ex 2 liquid temp. Sensor Error	40
A8		Poor refrigerant circulation	5U.1	A8.1*	Pipe clog	94
				A8.2*	Valve unopened error	
				A8.3*	Refrigerant undercharged error	
				A8.4*	Refrigerant overcharged error	

*Currently, there in no outdoor unit that can display this display.

4-2-5 Trouble shooting index - Error code List 2/2 -

Display Target A	Display Target B	Display Target C	Display Target D
Simple Wired remote controller 2 / 3 wires Wired remote controller Indoor unit LED brinking times, " 1st figure: Operation LED, 2nd figure: Timer LED"	Group Remote controller Central Remote controller Touch- Panel controller	7 seg. Display on Outdoor unit Controller PCB	Service Tool

✱: No Display **A**: LED 10 times Blinks **J**: LED 13 times Blinks **U**: LED 15 times Blinks

Display Target A	Display Target B	Error Contents < Subsection >	Display Target C	Display Target D	Error Contents < Supecifics >	Trouble shooting No.
9 U	7 4	Outdoor temp. Sensor Error	7 4 . 1		Outdoor temp. Sensor Error	41
	7 5	Suction gas temp. Sensor Error	7 5 . 1		Suction gas temp. Sensor Error	42
	7 7	Heat sink temp. Sensor Errorl	7 7 . 1		Heat sink temp. Sensor Error	43
	8 2	Sub cool HEX temp. Sensor Error	8 2 . 2		Sub cool HEX gas outlet temp. Sensor Error	44
	8 3	Liquid pipe temp. Sensor Error	8 3 . 1		Liquid pipe temp. Sensor 1 Error	45
			8 3 . 2		Liquid pipe temp. Sensor 2 Error	46
	8 4	Current Sensor Error	8 4 . 1		Current sensor 1 Error	47
	8 6	Pressure Sensor Error	8 6 . 1		Discharge pressure sensor Error	48
			8 6 . 3		Suction pressure sensor Error	49
			8 6 . 4		High pressure SW 1 Error	50
	9 3	Compressor start up Error	9 3 . 1		Inverter compressor Start up Error	51
	9 4	Trip Detection	9 4 . 1		Trip detection	52
	9 5	Compressor motor control Error	9 5 . 5		Compressor motor loss of synchronization	53
	9 7	Outdoor unitFAN Motor 1 Error	9 7 . 1		Outdoor unit FAN Motor Lock Error	54
			9 7 . 5		Outdoor unit FAN Motor temp. Abnormal	55
			9 7 . 9		Outdoor unit FAN Motor Driver Abnormal	56
	9 A	Outdoor unit coil (EEV) Error	9 A . 1		Coil 1 (EEV) Error	57
			9 A . 2		Coil 2 (EEV) Error	58
			9 A . 3		Coil 3 (EEV) Error	59
	*1	Outdoor unit Abnormal	*1		Slave out door unit Eror	60
	A 1	Discharge temp. Abnormal	A 1 . 1		Discharge temp. 1 Abnormal	61
	A 3	Compressor temp. Abnormal	A 3 . 1		Compressor 1 Temperature Abnormal	62
	A 4	Pressure abnormal 1	A 4 . 1		High pressure Abnormal	63
			A 4. 2		High pressure protection 1	64
	A 5	Pressure abnormal 2	A 5 . 1		Low pressure Abnormal	65
	A 6	Heat-Ex temp. Abnormal	A 6 . 3		Outdoor unit Heat-Ex 1 Gas temp. Abnormal	66
			A 6 . 4		Outdoor unit Heat-Ex 2 Gas temp. Abnormal	67
	A C	Ambient temp Abnormal	A C . 4		Outdoor unit Heat Sink temp. Abnormal	68
J 1		RB Unit Error	5 U . 1	J 1 . 1	RB Unit EEPROM Access Abnormal	69
1 4			1 4 . 1 1 4 . 2	1 4 . 1 1 4 . 2 1 4 . 3 J 1 . 4	RB Unit transmission PCB2 parallel communication Error	70
J 1	1 6					
*		Initial Setting Error	- - - -	*	Initial Setting Error	71

*1: Master Outdoor unit : 9 U. 2 / Slave Outdoor unit and Service Tool indicate applicable Error code

Other Error code for Outdoor Air unit / DX-Kit

3 9	Indoor unit power supply circuit error	5 U.1	39.1	Indoor unit power supply error for fan motor 1	81
			39.2	Indoor unit power supply error for fan motor 2	
4 A	Indoor unit air temp. thermistor error		4A.1	Indoor unit suciton air temp. thermistor error	82
			4A.2	Indoor unit discharge air temp. thermistor error	83
5 9	Indoor unit fan motor 2 error		59.2	Indoor unit fan motor 2 rotation speed error	84

Other Error code for DX-Kit

5 2	Indoor unit Coil (EEV) Error	5 U.1	52.2	Indoor unit Coil 2 (EEV) Error	85
J 6	Peripheral device Error		J6.1	Peripheral device Error	86

Wired remote controller "Internal Error"

* These error codes will be shown only on the remote controller.

CC. 1 C 2. 1 1 5. 4	*	Sensor Error Transmission PCB Error Data acquisition Error	*	*	Replace the remote controller, if the error appeares on the remote controller.

4-2-6 Trouble shooting index - No Error code -

	Error condition	Error Contents	Trouble shooting
No Error Code System Abnormal	Indoor Unit - No Power (Except Wall Mounted)	Indoor Unit - No Power (Except Wall Mounted)	72
	Indoor unit - No Power (Wall Mounted)	Indoor Unit -No Power(Wall Mounted)	73
	Outdoor unit - No Power	Outdoor unit - No Power	74
	RB Unit - No Power	RB Unit - No Power	75
	No operation (Power is ON)	No operation (Power is ON)	76
	No Cooling	No Cooling / No Heating	77
	Abnoemal Noise	Abnormal Noise	78
	Water leaking	Water leaking	79
	Indoor Unit - No Power(Outdoor air unit)	Indoor Unit - No Power (Outdoor air unit)	80
	Peripheral device - No Power	Peripheral device - No Power	87
	Peripheral device - FAN not operates	Peripheral device - FAN not operates	88
	Peripheral device No Cooling / No Heating	Peripheral device No Cooling / No Heating	89
	DX-Kit - No Power	DX-Kit - No Power	90

4-2-7 TROUBLE LEVEL OF SYSTEM

<< System Condition when Outdoor Unit Error is occurred >>

System Condition	Outdoor unit Condition	Trouble Level	
		1	2
		Not indicated on Indoor Unit and Peripheral unit. Indicated on Service Tool.	Indicated on Indoor Unit (*1) and Peripheral unit. Indicated on Service Tool.
① System is not stopped compulsorily Operation continues	Abnormal LED indication Outdoor unit does not stop	- 14.1 Outdoor unit network communication 1 error	- 62.3 Outdoorunit EEPROM acccess error - 62.8 EEPROM data corrupted error - 73.5 Heat Ex.1 liquid temp. sensor error - 73.7 Heat Ex.2 liquid temp. sensor error - 75.1 Suction gas temp sensor error - 82.2 Sub-cool Heat Ex. gas outlet temp. sensor error - 83.1 Liquid pipe temp. sensor 1 error - 83.2 Liquid pipe temp. sensor 2 error
② System is compulsorily stopped (*4)	Abnormal LED indication Outdoor unit stop	- 67.2 Inverter PCB short interruptation detection	- 62.6 Inverter communication error - 63.1 Inverter error - 68.2 Rush current limiting resister temp. rise protection (*3) - 71.1 Discharge Temp sensor 1 error - 72.1 Compressor Temp sensor 1 error - 73.4 Heat Ex. 1 gas temp sensor error - 73.6 Heat Ex. 2 gas temp sensor error - 74.1 Outdoor Temp sensor error - 77.1 Heat sink Temp sensor error - 84.1 Current sensor 1 error (*3) - 86.1 Discharge pressure sensor error - 86.3 Suction pressure sensor error - 86.4 High pressure switch 1 error - 93.1 Inverter compressor start up error (*3) - 94.1 Trip detection (*3) - 95.5 Comp. motor loss of synchronization (*3) - 97.1 Outdoor unit fan motor lock error (*3) - 97.5 Fan motor temperature abnormal (*3) - 97.9 Fan motor driver abnormal (*3) - A1.1 Discharge temperature 1 abnormal (*3) - A3.1 Compressor1 temperature abnormal (*3) - A4.1 High pressure abnormal - A4.2 High pressure protection1 - A6.3 Outdoor Heat Ex. 1 gas temp. abnormal (*3) - A6.4 Outdoor Heat Ex. 2 gas temp. abnormal (*3) - AC.4 Heat sink temperature abnormal
③ System is compulsorily stopped	Abnormal LED indication Outdoor unit stop		- 13.1 Communication error between outdoor unit - 14.2 Outdoor unit network communication 2 error - 14.5 The number of indoor unit shortage (*2) - 61.5 Outdoor unit reverse phase, missing phase wire error - 69.1 Outdoor unit transmission PCB parallel communication error - 9A.1 Coil1 (Expansion valve1) error - 9A.2 Coil2 (Expansion valve2) error - 9A.3 Coil3 (Expansion valve3) error - A5.1 Low pressure abnormal (*3)

(*1) This will not be displayed on indoor unit which Error Report Target (function setting 47 of indoor unit) is set "for administrator".
(*2) The System condition can change to ① (Trouble Level 1) by changing DIP SW (SET 4-1:OFF)
(*3) Even if power is reset, this Error cannot release. In Error release, you need to solving the problem and operate the push switch and a and apply "Error reset" (F3-40) after power restart.
(*4) When one of outdoor unit on the multi connection detects these Error, the backup operation can activate by using of remaining outdoorunit(s) Please check each trouble shooting, and read the caution before using the backup operation.

<< Error code which manual error release will be required >>

A5.1 Low pressure abnormal
84.1 Current sensor 1 error
93.1 Inverter compressor start up error
94.1 Trip detection
A1.1 Discharge temperature 1 abnormal
A3.1 Compressor 1 temperature abnormal
97.1 Outdoor unit fan motor lock error
97.5 Fan motor temperature abnormal
97.9 Fan motor driver abnormal
68.2 Rush current limiting resister temp rise protection
95.5 Compressor motor loss of synchronization
A6.3 Outdoor heat exchanger 1 gas temperature abnormal
A6.4 Outdoor heat exchanger 2 gas temperature abnormal

4-2-8 ERROR HISTORY MODE

When the abnormality occurred, the Outdoor unit memorizes the history of error codes up to 10 and it can be displayed on 7 segments LED.
It is an effective means to examine abnormality that occurred in the past.

*The error history can be cleared by setting to F3-30.

Refer to the following for the procedure.

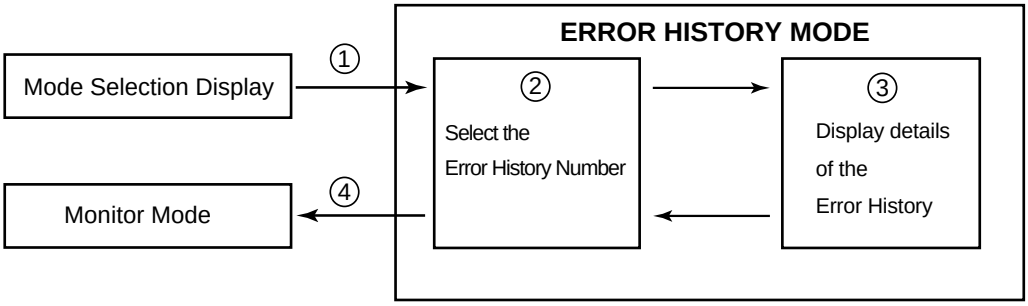

① Change to the Error History Mode from the Mode Selection Display

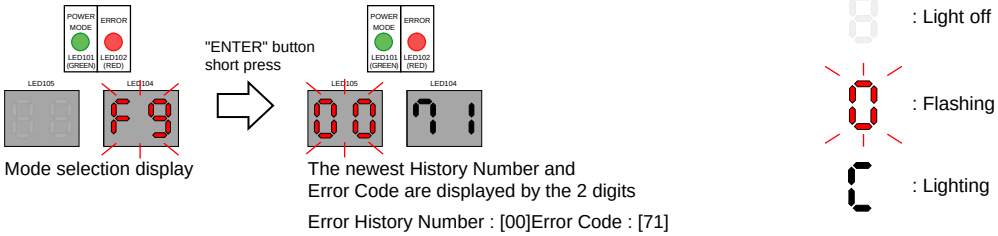

② Select the Error History Number

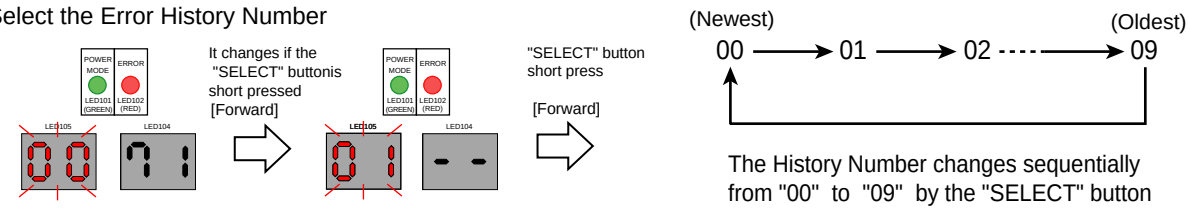

③ Check the detail of the Error History

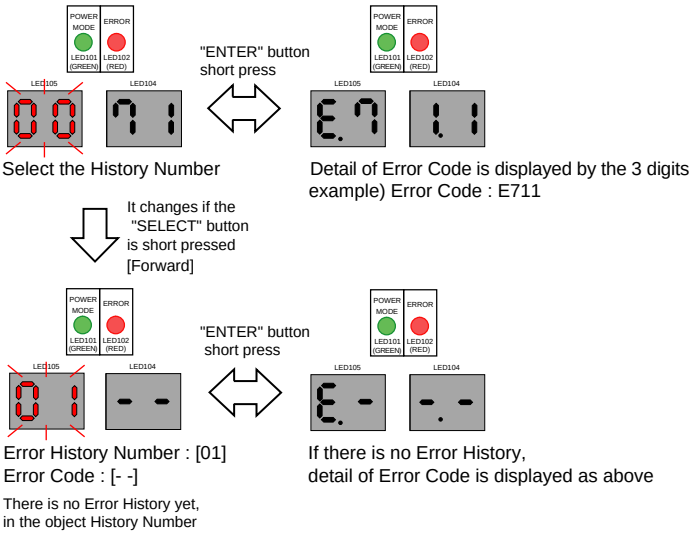

④ End of the Error History mode

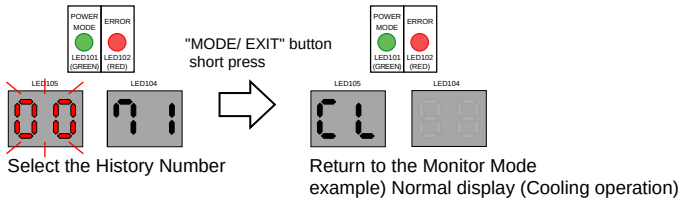

4-2-9 TROUBLESHOOTING WITH ERROR CODE

Troubleshooting 1 **E12.1** **INDOOR UNIT Error Method:** **Wired Remote Controller Communication Error**	**Indicate or Display:** **Outdoor Unit : E.5 U.1** **Indoor Unit : Operation LED 1 times Flash, Timer LED 2 Times Flash, Filter LED Continuous Flash. < 1 2 >** **Error Code : 1 2**
Detective Actuators: Indoor unit controller PCB circuit Wired Remote Control (3 wire / 2 Wire type)	**Detective details:** Upon receiving the signal more than 1 time from Wired Remote or other Indoor unit, but the same signal has not been received more than 1 minute (3 Wire type). 2.5 minute (2 Wire type)

Forecast of Cause : 1. Terminal connection abnormal 2. Wired Remote Control failure 3. Controller PCB failure

Check Point 1 : Check the connection of terminal

After turning off the power, check & correct the followings.

- ☐ Indoor Unit - Check the connection of terminal between remote control and Indoor unit, or between Indoor units, and check if there is a disconnection or short of the cable.

OK

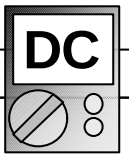

Check Point 2 : Check Remote and Controller PCB

- ☐ Check terminal voltage of controller PCB Connector CNC01. (Power supply for Remote)

  If DC12V, Remote Control failure (Controller PCB is OK) >>> Replace Remote controller

  If DC0V, Controller PCB failure (Remote is OK) >>> Replace Controller PCB

▶ **In case of re-installation is done due to removed connector or incorrect wiring, turn on the power again.**

Troubleshooting 2 E12.2 **INDOOR UNIT Error Method:** **Wired Remote Controller signal Error**	**Indicate or Display:** **Outdoor Unit : E.5 U.1,** **Indoor Unit : Operation LED 1 times Flash, Timer LED 2 Times Flash, Filter LED Continuous Flash.** **Remote Controller : 1 2**
Detective Actuators: Indoor unit Controller PCB circuit Wired Remote Control (3 wire type)	**Detective details:** More than 1 time of Token (Communication between wired remote controllers) is received, but it was not received more than 1 minute.

Forecast of Cause : 1. Terminal connection abnormal 2. Mis-setting 3. Wired Remote Control failure 4. Controller PCB failure

Check Point 1 : Check the connection of terminal

After turning off the power, check & correct the followings.

☐ Indoor Unit - Check the connection of terminal between remote control and Indoor unit, or between Indoor units, and check if there is a disconnection or short of the cable.

OK

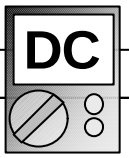

Check Point 2 : Check Remote and Controller PCB

☐ Check terminal voltage of Controller PCB Connector CNC01. (Power supply for Remote)

If DC12V, Remote Control failure (Controller PCB is OK) >>> Replace Remote

IIf DC0V, Controller PCB failure (Remote is OK) >>> Replace Conroller PCB

▶ **In case of re-installation is done due to removed connector or incorrect wiring, turn on the power again.**

Troubleshooting 3 **E12.3** **INDOOR UNIT Error Method:** **Number excess of device in Wired remote contorller system (2 Wires RC)**	**Indicate or Display:** **Outdoor Unit : E.5 U.1** **Indoor Unit : Operation LED 1 times Flash, Timer LED 2 Times Flash, Filter LED Continuous Flash.** **Error Code : 1 2**
Detective Actuators: Wired remote controller (2-Wire) Indoor unit Controller PCB circuit	**Detective details:** When the number of connecting Indoor unit and Remote controller in one RCgroup exceeds more than 32 units.

Forecast of Cause : 1. Wrong wiring of RCgroup 2. Indoor unit controller PCB failure

Check Point 1 : Wire installation Wrong RCgroup setting
☐ Wrong wire connection in RCgroup (Please refer to the installation manual) ☐ The number of connecting indoor unit and Remote controller in one RCgroup were less than 32 units.

↓

Check Point 2 : Check Indoor unit controller PCB
☐ Check if controller PCB damage ☐ Change controller PCB and check the Error after setting remote controller address

Troubleshooting 4 E1 3. 1 **OUTDOOR UNIT Error Method:** **Communication Error Between Outdoor unit**	**Indicate or Display:** **Outdoor Unit : E. 1 3. 1** **Indoor Unit : Operation LED 9 times Flash, Timer LED 15 Times Flash, Filter LED Continuous Flash.** **Error Code : 9 U / 1 3**

Detective Actuators:	**Detective details:**
Outdoor unit Main PCB	Master unit: State in which "number of connected slave units" by Dip-SW and the number of slave units which can be recognized by communication did not match continued for 10 seconds or more after the start of control. Slave unit: State in which communication from the master unit was not received continued for 10 seconds or more after the start of control.

Forecast of Cause :
1. Noise, momentary open, voltage drop
2. Power supply defective
3. The number setting mistake of outdoor unit
4. Connection of communication lines between outdoor units defective
5. Main PCB defective

Check Point 1 : Noise, momentary open, voltage drop

- ☐ Check if temporary voltage drop was not generated.
- ☐ Check if momentary open was not generated.
- ☐ Check if ground is connection correctly or there are no related cables near the power line.

OK

Check Point 2 : Check the power supply

- ☐ Main power ON/OFF state check
- ☐ Power cable connection, open check

OK

Check Point 3 : Check the number setting of outdoor units

- ☐ Check the number setting of outdoor units.

Number of outdoor unit	DIP-SW SET 5-1	DIP-SW SET 5-2
1 unit	OFF	OFF
2 units	OFF	ON
3 units	ON	OFF

OK

Check Point 4 : Check the connection of communication lines between outdoor units

Turn off the power and check.

- ☐ Connection and open check of communication lines between outdoor units.

OK

Check Point 5 : Replace Main PCB

- ☐ Change Main PCB and set up the original address.

Troubleshooting 5 E14.1 **OUTDOOR UNIT Error Method:** **Outdoor Unit Network Communication 1 Error**	**Indicate or Display:** **Outdoor Unit : E. 1 4. 1** **Indoor Unit : No display / Operation LED 1 times Flash, Timer LED 4 Times Flash, Filter LED Continuous Flash.** **Error Code : 1 4 / 1 6 / 1 4. 1 / 1 4. 3 ***

*** Indoor unit indicates No display or 1 4**
Peripheral device indicates 1 4 or 16.

Detective Actuators:	**Detective details:**
Outdoor unit Main PCB	▪DIP-SW SET4-1 is OFF. ▪No communication for 180 seconds or more from an indoor unit which received communication once and no Outdoor unit network communication 2 error.

Forecast of Cause : 1. Noise, momentary open, voltage drop 2. Indoor unit or RB unit power off
3. Communication line connection defective 4. Terminal resistor setting mistake
5. Communication PCB mounting defective, Communication PCB defective 6. Controller PCB defective

Check Point 1 : Noise, momentary open, voltage drop

- ☐ Check if temporary voltage drop was not generated.
- ☐ Check if momentary open was not generated.
- ☐ Check if ground is connection correctly or there are no related cables near the power line.

↓ **OK**

Check Point 2 : Check the indoor unit or RB unit power supply

- ☐ Main power ON check
- ☐ Power cable connection and open check

↓ **OK**

Check Point 3 : Check the communication line connection

- ☐ Communication line connection, open check
  Refer to SERVICE INFORMATION Network communication Abnormal

↓ **OK**

Check Point 4 : Check the Terminal resistor setting

- ☐ Terminal resistor setting check

↓ **OK**

Check Point 5 : Check the communication PCB (outdoor unit/ indoor unit/ RB unit)

- ☐ Communication PCB connection check
- ☐ Communication PCB check

↓ **OK**

Check Point 6 : Replace Main PCB (outdoor unit/ indoor unit/ RB unit)

- ☐ Change Main PCB and set up the original address.

Troubleshooting 6 E14. 2 **OUTDOOR UNIT Error Method :** **Outdoor Unit Network Communication 2 Error**	**Indicate or Display:** **Outdoor Unit : E. 1 4. 2** **Indoor Unit : Operation LED 9 times Flash, Timer LED 15 Times Flash, Filter LED Continuous Flash. / Operation LED 1 times Flash, Timer LED 4 Times Flash, Filter LED Continuous Flash. *** **Error Code : 9 U / 1 4 / 1 6 / 1 4. 1 / 1 4. 2 / 1 4. 3 ***

*** Indoor unit indicates 9 U or 1 4**
Peripheral device indicates 1 4 or 1 6

Detective Actuators:	**Detective details:**
Outdoor unit Main PCB	[DIP-SW SET4-1 : ON] (Factory setting) ▪No communication for 180 seconds or more from an indoor unit which received communication once. [DIP-SW SET4-1 : OFF] ▪No communication for 180 seconds or more from all indoor units that once received communication.

Forecast of Cause : 1. Noise, momentary open, voltage drop 2. Indoor unit or RB unit power off
3. Communication line connection defective 4. Terminal resistor setting mistake
5. Communication PCB mounting defective, Communication PCB defective 6. Control PCB defective

Check Point 1 : Noise, momentary open, voltage drop

- ☐ Check if temporary voltage drop was not generated.
- ☐ Check if momentary open was not generated.
- ☐ Check if ground is connection correctly or there are no related cables near the power line.

↓ **OK**

Check Point 2 : Check the indoor unit or RB unit power supply

- ☐ Main power ON check
- ☐ Power cable connection and open check

↓ **OK**

Check Point 3 : Check the communication line connection

- ☐ Communication line connection, open check
  Refer to SERVICE INFORMATION Network communication Abnormal

↓ **OK**

Check Point 4 : Check the Terminal resistor setting

- ☐ Terminal resistor setting check

↓ **OK**

Check Point 5 : Check the communication PCB (outdoor unit/ indoor unit/ RB unit)

- ☐ Communication PCB connection check
- ☐ Communication PCB check

↓ **OK**

Check Point 6 : Replace Main PCB (outdoor unit/ indoor unit/ RB unit)

- ☐ Change Main PCB and set up the original address.

Troubleshooting 7 E14. 3 **INDOOR UNIT Error Method:** **Indoor unit Network communication Error**	**Indicate or Display:** **Outdoor Unit : E.1 4. 1 / 1 4. 2 *** **Indoor Unit : Operation LED 1 times Flash, Timer LED 4 Times Flash, Filter LED Continuous Flash.** **Error Code : 1 4 / 1 6 / 9 U / 14.1 / 14.2 / 14.3 ***

*** Outdoor unit indicates 1 4.1 or 1 4.2 (No communication from 14.3 Error Indoor unit)**
Peripheral device indicates 1 4 or 1 6

Detective Actuators:	**Detective details:**
Indoor unit Controller PCB circuit Indoor unit Communication PCB	When the cut-off of network communication is detected (more than 90 seconds passed since the last receipt of Outdoor unit signal).

Forecast of Cause : 1. Outside cause 2.Connection failure 3. Communication PCB failure 4. Controller PCB failure

Check Point 1 : Check if any outside cause such as voltage drop or noise

- Instant voltage drop ----- Check if there is any electric equipment with a large load within the same circuit.
- Momentary power failure ----- Check contact failure or leak current in power supply circuit
  >>Check power supply for RB unit and Outdoor Unit as well.
- Check if there is any equipment that causes harmonic wave near the power cable (Neon light bulb or any electronic equipment which causes harmonic wave). And check the complete insulation of grounding.
  >>If the same symptom does not reappear after resetting the power, possibility of noise is high.

↓

Check Point 2 : Check the connection

After turning off the power, check and correct followings.

- ☐ Is Indoor Communication PCB loose?
- ☐ Check loose or removed connection of communication line Indoor unit => RB unit => Outdoor unit.
  Refer to SERVICE INFORMATION Network communication Abnormal
- ☐ Check the Error indication of RB unit.
  Refer to SERVICE INFORMATION RB Unit Abnormal
- ☐ When the signal amplifier is connected , Check the error indication of signal amplifier. (Refer to the installation manual)

↓ **OK**

Check Point 3 : Check Communication PCB

- ☐ Replace Communication PCB of the Indoor units that have the error.
- ☐ If still the error is there, replace the communication PCB of the RB unit which corresponds to the error indicating Indoor unit.

↓ **OK**

Check Point 4 : Check Controller PCB

- ☐ Replace controller PCB of the Indoor units that have the error.
- ☐ If still the error is there, replace the controller PCB of the RB unit which corresponds to the error indicating Indoor unit.

Troubleshooting 8 E14. 5 **OUTDOOR UNIT Error Method:** **The number of Indoor unit shortage Error**	**Indicate or Display:** **Outdoor Unit : E.1 4. 5** **Indoor Unit : Operation LED 9 times Flash, Timer LED 15 Times Flash, Filter LED Continuous Flash. / No display (When DIP-SW4-1 is OFF.)** **Error Code : 9 U / 1 4 / 1 6 / 1 4. 5 / 1 4. 3 ***

***Peripheral device indicates 14,16**

Detective Actuators:	**Detective details:**
Outdoor unit Main PCB	When the indoor unit number decreases for 180 seconds from the memorized maximum indoor units number after power(Breaker) ON.

Forecast of Cause :
1. Indoor unit or RB unit power off
2. Noise, momentary open, voltage drop
3. Communication line connection defective
4. Terminal resistor setting mistake
5. Communication PCB mounting defective, Communication PCB defective
6. Controller PCB defective

Check Point 1 : Find the indoor unit that the communication is lost.

- ☐ Check system drawing and service tool.

↓ **OK**

Check Point 2 : Check the indoor unit or RB unit power supply

- ☐ Main power ON check
- ☐ Power cable connection and open check

↓ **OK**

Check Point 2 : Noise, momentary open, voltage drop

- ☐ Check if temporary voltage drop was not generated.
- ☐ Check if momentary open was not generated.
- ☐ Check if ground is connection correctly or there are no related cables near the power line.

↓ **OK**

Check Point 3 : Check the communication line connection

- ☐ Communication line connection, open check

  Refer to SERVICE INFORMATION Network communication Abnormal

↓ **OK**

Check Point 4 : Check the Terminal resistor setting

- ☐ Terminal resistor setting check

↓ **OK**

Check Point 5 : Check the communication PCB (indoor unit/ outdoor unit/ RB unit)

- ☐ Communication PCB connection check
- ☐ Communication PCB check

↓ **OK**

Check Point 6 : Replace Main PCB and Communication PCB (indoor unit/ outdoor unit/ RB unit)

- ☐ Change Main PCB and Communication PCB, and set up the original address.

Attention!!

In case of DIP-SW SET4-1 is ON(factory setting), If this error occurs, system stops.In case of DIP-SW SET4-1 is OFF,
If this error occurs, system does not stop.

If the failure indoor unit is pinpointed and it needs to erase the error indication, it can be reset by function setting (F3-41: Maximum memorized indoor unit number reset).

Caution!!

Even if normal, this error occurs temporarily by the timing of the power ON of outdoor unit, indoor unit, RB unit, and signal amplifier.

In this case, please wait for 5 minutes after turning on all the equipments.

Troubleshooting 9 E16. 1 **INDOOR UNIT Error Method:** Transmission PCB Connection Error	**Indicate or Display:** Outdoor Unit : E.1 4.1, 1 4.2 * Indoor Unit : Operation LED 1 times Flash, Timer LED 6 Times Flash, Filter LED Continuous Flash. Error Code : 1 6 *

*** Outdoor unit indicates 1 4.1 or 14.2 (No communication from Indoor unit)**
Peripheral device indicates 1 6 (1 6.4 Error)
Service Tool indicates 14.3 (Missing Error Indoor unit)

Detective Actuators:	**Detective details:**
Indoor unit Controller PCB circuit Indoor unit Communication PCB	When Parallel communication error (Communication reset occurs continuously more than specified times) is detected.

Forecast of Cause : 1. Connection failure 2. Outside cause 3. Communication PCB failure 4. Controller PCB failure

Check Point 1-1 : Reset the power

Does LED error indication reappear?

NO → **Check Point 1-2 : Check outside cause such as noise**

- ☐ Check the complete insulation of the grounding.
- ☐ Check if there is any equipment that causes harmonic wave near the power cable (Neon light bulb or any electronic equipment which causes harmonic wave).

YES ↓

Check Point 2 : Check Connection

- ☐ Check if Indoor Communication PCB is removed.

OK ↓

Check Point 3 : Replace Communication PCB

- ▶ **Replace Communication PCB (If the symptom does not change, replace Controller PCB and set up the original address.**

Troubleshooting 10 E16. 4 **INDOOR UNIT Error Method:** **Communication Error Between Controller and Indoor unit**	**Indicate or Display:** **Outdoor Unit : No Display** **Indoor Unit : No Display** **Error Code : 1 6 (Peripheral Unit)**

Detective Actuators:	**Detective details:**
Indoor unit Controller PCB circuit Indoor unit Communication PCB	When the cut-off of network communication is detected (more than 90 seconds passed since the last receipt of Outdoor unit signal).

Forecast of Cause : 1. Outside cause 2.Connection failure 3. Communication PCB failure 4. Controller PCB failure

Check Point 1 : Check if any outside cause such as voltage drop or noise

- Instant voltage drop ----- Check if there is any electric equipment with a large load within the same circuit.
- Momentary power failure ----- Check contact failure or leak current in power supply circuit
  >>Check power supply for RB unit and Outdoor Unit as well.
- Check if there is any equipment that causes harmonic wave near the power cable (Neon light bulb or any electronic equipment which causes harmonic wave). And check the complete insulation of grounding.
  >>If the same symptom does not reappear after resetting the power, possibility of noise is high.

↓

Check Point 2 : Check the connection

After turning off the power, check and correct followings.

- ☐ Is Indoor Communication PCB loose?
- ☐ Check loose or removed connection of communication line Indoor unit => RB unit => Outdoor unit.
  Refer to the Service Information -Network Abnormal -
- ☐ Check the Error indication of RB unit. (Refer to the Trouble shooting 69, 70)
- ☐ When the signal amplifier is connected , Check the error indication of signal amplifier - Refer to the Installation manual-

↓ **OK**

Check Point 3 : Check Communication PCB

- ☐ Replace Communication PCB of the Indoor units that have the error.
- ☐ If still the error is there, replace the communication PCB of the RB unit which corresponds to the error indicating Indoor unit.

↓ **OK**

Check Point 4 : Check Controller PCB

- ☐ Replace controller PCB of the Indoor units that have the error.
- ☐ If still the error is there, replace the controller PCB of the RB unit which corresponds to the error indicating Indoor unit.

Troubleshooting 11 E26. 4 **INDOOR UNIT Error Method:** **Address Duplication in Wired remote contorller system**	**Indicate or Display:** **Outdoor Unit : E.5 U.1** **Indoor Unit : Operation LED 2 times Flash, Timer LED 6 Times Flash, Filter LED Continuous Flash.** **Error Code : 2 6**
Detective Actuators: Wired remote controller (2-Wire) Indoor unit Controller PCB circuit	**Detective details:** When the duplicated address number exists in one RCgroup

Forecast of Cause : 1. Wrong wiring of RCgroup 2. Wrong remote address setting 3. Indoor unit controller PCB failure 4. Remote controller failure

Check Point 1 : Wire installation

- ☐ Wrong wire connection in RCgroup (Please refer to the installation manual)

↓

Check Point 2 : Wrong RCgroup setting

- ☐ The duplicated address number is not existing in one RCgroup

↓

Check Point 3 : Check Indoor unit controller PCB

- ☐ Check if controller PCB damage
- ☐ Change controller PCB and check the Error after setting remote controller address

Troubleshooting 12 E26. 5 **INDOOR UNIT Error Method:** **Address setting Error in Wired remote contorller system**	**Indicate or Display:** **Outdoor Unit : E.5 U.1** **Indoor Unit : Operation LED 2 times Flash, Timer LED 6 Times Flash, Filter LED Continuous Flash.** **Error Code : 2 6**
Detective Actuators: Wired remote controller (2-Wire) Indoor unit Controller PCB circuit	**Detective details:** When the address number set by auto setting and manual setting are mixed in one RC group

Forecast of Cause : 1. Wrong wiring of RCgroup 2. Wrong remote address setting 3. Indoor unit controller PCB failure 4. Remote controller failure

Check Point 1 : Wire installation

- ☐ Wrong wire connection in RCgroup (Please refer to the installation manual)

↓

Check Point 2 : Wrong RCgroup setting

- ☐ The given address number by auto setting (00) and the manual set number (Except 00) were not existing in one RCG.
- ☐ The remote controller address setting by U.I. were not existing same address.

↓

Check Point 3 : Check Indoor unit controller PCB

- ☐ Check if controller PCB damage
- ☐ Change controller PCB and check the Error after setting remote controller address

Troubleshooting 13 E28. 1 **OUTDOOR UNIT Error Method:** Auto Address Setting Error	**Indicate or Display:** Outdoor Unit : E. 28. 1 Indoor Unit : No Display Error Code : No Display * Service tool does not indicate the Error code

<< After Indoor unit Auto Adress setting >>

Detective Actuators:	**Detective details:**
Outdoor unit Main PCB	▪ When none of the connected indoor units answers during auto address And when abnormal answer signal is input.

Forecast of Cause :
1. Indoor unit power supply defective
2. Indoor unit overconnected
3.Communication line incorrect connection
4. Noise, momentary open

Check Point 1 : Check the indoor unit power supply

☐ Check the indoor unit power supply

↓ **OK**

Check Point 2 : Check the indoor unit number connection

☐ Check if more than 64 indoor units are connected in a refrigerant circuit

↓ **OK**

Check Point 3 : Check the communication line connection

Check if communication line is correctly connected
- ☐ Is it uncoupled or cut halfway ?
- ☐ Connecting terminal position is correct as the installation manual shows ?

↓ **OK**

Check Point 4 : Check noise, momentary open, voltage drop

☐ Check if power supply temporarily stops by outages or if strong noise is generated from surrounding environment during auto address

<< After RB unit Auto Adress setting >>

Detective Actuators:	**Detective details:**
Outdoor unit Main PCB	▪ When there is except 0~63 (64 or more) in the indoor unit address of the indoor unit connected to RB unit. ▪ When the address memorized to RB unit was incorrectly value.

Forecast of Cause :
1. Indoor unit address setting error
2. RB unit controller PCB defective

Check Point 1 : Check the indoor unit address setting

☐ Check the indoor unit address.

↓ **OK**

Check Point 2 : Replace RB unit controller PCB

☐ Replace RB unit controller PCB.

Troubleshooting 14 E28. 4 **OUTDOOR UNIT Error Method:** **Signal Amplifier Auto Address Error**	**Indicate or Display:** **Outdoor Unit : E. 2 8. 4** **Indoor Unit : No Display** **Error Code : No Display** ***Service tool does not indicate the Error**

Detective Actuators:	**Detective details:**
Outdoor unit Main PCB	▪ When abnormal answer signal is input during signal amplifier auto address

Forecast of Cause :
1. Signal amplifier power supply defective
2. Signal amplifier overconnected
3. Signal amplifier auto address wrong setting
4. Noise, momentary open.

Check Point 1 : Check signal amplifier unit power supply

- ☐ Check signal amplifier unit power supply

↓ **OK**

Check Point 2 : Check the signal amplifier number connection

- ☐ Check if more than 8 signal amplifiers (filter mode = off) are connected in a network.
- ☐ Check if more than 32 signal amplifiers (filter mode = on) are connected in a network.

↓ **OK**

Check Point 3 : Check the operation of signal amplifier auto address setting

- ☐ Check if signal amplifier auto address is set at the same time from multiple outdoor units (master unit)

↓ **OK**

Check Point 4 : Check noise, momentary open, voltage drop

- ☐ Check if power supply temporarily stops by outages or if strong noise is generated from surrounding environment during signal amplifier auto address

Troubleshooting 15 **E29. 1** **INDOOR UNIT Error Method:** **Connection unit number error (Indoor unit in Wired remote controller system)**	**Indicate or Display:** **Outdoor Unit : E.5 U.1** **Indoor Unit : Operation LED 2 times Flash, Timer LED 9 Times Flash, Filter LED Continuous Flash.** **Error Code : 2 9**
Detective Actuators: Wired remote controller (2-Wire) Indoor unit Controller PCB circuit	**Detective details:** When the number of connecting indoor units are out of specified rule.

Forecast of Cause : 1. Wrong wiring/ Number of I.U, RC in RCgroup 2. Indoor unit controller PCB defective

Check Point 1 : Wire installation

- ☐ Wrong number of connceting indoor unit

↓

Check Point 2 : Check Indoor unit controller PCB

- ☐ Check if controller PCB damage
- ☐ Change controller PCB and check the Error after setting remote controller address

Troubleshooting 16 E29. 2 **INDOOR UNIT Error Method:** **Connection unit number error (Remote controller)**	**Indicate or Display:** **Outdoor Unit : No Display** **Indoor Unit : No Display** **Error Code : 2 9**
Detective Actuators: Wired remote controller (2-Wire)	**Detective details:** When the number of connecting remote controller are out of specified rule.

Forecast of Cause : 1. Wrong wiring / Wrong number of connecting RC in RCgroup 2. Remote controller PCB defective

Check Point 1 : Wire installation

- ☐ Wrong number of connceting remote controller

↓

Check Point 2 : Check Indoor unit controller PCB

- ☐ Check if controller PCB damage
- ☐ Change controller PCB and check the Error after setting remote controller address

Troubleshooting 17 E31. 3 **INDOOR UNIT Error Method:** **Indoor unit Power Frequency Abnormal**	**Indicate or Display:** **Outdoor Unit : E.5 U.1** **Indoor Unit : Operation LED 3 times Flash, Timer LED 1 Times Flash, Filter LED Continuous Flash.** **Error Code : 3 1**
Detective Actuators: Indoor Unit Controller PCB Circuit	**Detective details:** When 5 continuous failures occurred at Power frequency test.

Forecast of Cause : 1. Outside cause 2. Installation failure 3. Defective connection of electric components 4. Controller PCB defective

Check Point 1-1 : Reset Power Supply

Does abnormal LED indication show again?

NO → **Check Point 1-2 : Check outside cause (Voltage drop or noise, etc.)**

- Instant drop ----- Check if there is a large load electric apparatus in the same circuit.
- Momentary power failure ----- Check if there is a defective contact or leak current in the power supply circuit.
- Noise ----- Check if there is any equipment causing harmonic wave near electric line (Neon bulb or electric equipment that may cause harmonic wave). Check the complete insulation of grounding.

YES ↓

Check Point 2 : Check Installation condition

- ☐ Check Cable/Breaker
- ☐ Check loose or removed connection

>> If Installation defect is found, correct it by referring to Installation Manual.

OK ↓

Check Point 3 : Check connection of electric components

- ☐ Check power supply voltage (AC230V between Indoor unit terminal 1 and 2)
- ☐ Check connection of Connector (any lose connector or incorrect wiring)
- ☐ Check any shortage or corrosion on PCB.

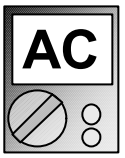

OK ↓

Check Point 4 : Replace Controller PCB

► **Change Controller PCB and set up the original address.**

Troubleshooting 18 E32. 1 **INDOOR UNIT Error Method:** **Indoor unit PCB Model Information Error**	**Indicate or Display:** **Outdoor Unit : E.5 U.1** **Indoor Unit : Operation LED 3 times Flash, Timer LED 2 Times Flash, Filter LED Continuous Flash.** **Error Code : 3 2**
Detective Actuators: Indoor Unit Controller PCB Circuit	**Detective details:** 3 continuous failure of lead test of EEPROM at Power ON, or Apparent Model information error from EEPROM. Also, Error on Model information upon model information test of EEPROM, or Model information of EEPROM not possible to recover.

Forecast of Cause : 1. Outside cause 2. Connection failure of electric components 3. Controller PCB defective

Check Point 1-1 : Reset Power Supply

Does abnormal LED indication show again?

NO → Check Point 1-2

YES ↓

Check Point 2 :
Check Indoor Unit electric components

- ☐ Check all connectors (loose connector or incorrect wiring)
- ☐ Check any shortage or corrosion on PCB.

OK ↓

Check Point 3 : Replace Controller PCB

▶ **Change Controller PCB and set up the original address.**

Check Point 1-2 :
Check outside cause (Voltage drop or noise, etc.)

- Instant drop ----- Check if there is a large load electric apparatus in the same circuit.
- Momentary power failure ----- Check if there is a defective contact or leak current in the power supply circuit.
- Noise ----- Check if there is any equipment causing harmonic wave near electric line (Neon bulb or electric equipment that may cause harmonic wave). Check the complete insulation of grounding.

Note : EEPROM

EEPROM(Electronically Erasable and Programmable Read Only Memory) is a non-volatile memory which keeps memorized information even if power is turned off. It can change the contents electronically.
To change the contents, it uses higher voltage than normal, and it can not change a partial contents. (Rewriting shall be done upon erasing the all contents.)
There is a limit in a number of rewriting.

Troubleshooting 19 **E32. 3** **INDOOR UNIT Error Method:** **Indoor unit EEPROM Access Error**	**Indicate or Display:** **Outdoor Unit : E.5 U.1** **Indoor Unit : Operation LED 3 times Flash, Timer LED 2 Times Flash, Filter LED Continuous Flash.** **Error Code : 3 2**
Detective Actuators: Indoor Unit Controller PCB Circuit	**Detective details:** When 3 continuous failure occurred on lead test of EEPROM.

Forecast of Cause : 1. Outside cause 2. Defective connection of electric component 3. Controller PCB defective

Check Point 1-1 : Reset Power Supply

Does abnormal LED indication show again?

NO → Check Point 1-2 :

YES ↓

Check Point 2 :
Check Indoor Unit electric components

- ☐ Check all connectors (loose connector or incorrect wiring)
- ☐ Check any shortage or corrosion on PCB.

OK ↓

Check Point 3 : Replace Controller PCB

▶ **Change Controller PCB and set up the original address.**

Check Point 1-2 :
Check outside cause (Voltage drop or noise, etc.)

- Instant drop ----- Check if there is a large load electric apparatus in the same circuit.
- Momentary power failure ----- Check if there is a defective contact or leak current in the power supply circuit.
- Noise ----- Check if there is any equipment causing harmonic wave near electric line (Neon bulb or electric equipment that may cause harmonic wave). Check the complete insulation of grounding.

Troubleshooting 20 **E3A. 1** **INDOOR UNIT Error Method:** **Indoor unit communication circuit (WRC) microcomputers communication Error**	**Indicate or Display:** **Outdoor Unit : E.5 U.1** **Indoor Unit : Operation LED 3 times Flash, Timer LED 10 Times Flash, Filter LED Continuous Flash.** **Error Code : 3 A**
Detective Actuators: Wired remote controller (2-Wire) Indoor unit Controller PCB circuit	**Detective details:** When the indoor unit(s) detects the configuration of RCG abnormal or the indoor unit detects lack of primaly -remote controller.

Forecast of Cause : 1. Terminal connection abnormal 2. Wired remote controller failure
3. Indoor unit controller PCB defective

Check Point 1 : Check the connection of terminal

After turning off the power supply, check & correct the followings

- ☐ Indoor unit - Check the connection of terminal between remote control and indoor unit, or between Indoor units and check if there is a disconnection or short of the cable

Check Point 2 , 3: Check Indoor unit controller PCB

- ☐ Check terminal voltage of controller PCB connector CNC01 (Power supply for remote)

If DC12V, Remote control failure (Controller PCB is OK) >>> Replace Remote controller

If DC0V, Controller PCB failure (Remote is OK) >>> Replace Controller PCB

In case of re-installation is done due to remobed connector or incorrect wiring, turn on the power again.

Troubleshooting 21 E41. 1 **INDOOR UNIT Error Method:** **Inlet air temp. Sensor Error**	**Indicate or Display:** **Outdoor Unit : E.5 U.1** **Indoor Unit : Operation LED 4 times Flash, Timer LED 1 Times Flash, Filter LED Continuous Flash.** **Error Code : 4 1**

Detective Actuators:	**Detective details:**
Indoor Unit Controller PCB Circuit Inlet air temp Sensor	When Inlet air temp. sensor open or shortage is detected

Forecast of Cause :

1. Connector defective connection 2. Sensor defective 3. Controller PCB defective

Check Point 1 : Check connection of Connector

- ☐ Check if connector is loose or removed
- ☐ Check erroneous connection
- ☐ Check if sensor cable is open

>>Reset Power when reinstalling due to removed connector or incorrect wiring.

OK

Check Point 2 : Remove connector and check Sensor resistance value

Sensor characteristics (Rough value)

Temperature (°C)	0	5	10	15	20	25	30	35
Resistance Value (kΩ)	33.6	25.9	20.2	15.8	12.5	10.0	8.0	6.5
Voltage Value (V)	1.15	1.39	1.66	1.94	2.22	2.50	2.77	3.03

Temperature (°C)	40	45	50
Resistance Value (kΩ)	5.3	4.3	3.6
Voltage Value (V)	3.27	3.48	3.68

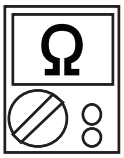

▶ **If Thermistor is either open or shorted, replace it and reset the power.**

OK

Check Point 3 : Check voltage of Controller PCB (DC5.0V)

Corresponding connector

Model Type	Room temp. Sensor (Black Wires)
Cassette type Duct type Ceiling type Wall mounted type Floor / Ceiling type Compact Floor type	CN8

▶ **If the voltage does not appear, replace Controller PCB and set up the original address.**

Troubleshooting 22 E42. 1 **INDOOR UNIT Error Method:** **Indoor unit Heat Ex. inlet temp. sensor Error**	**Indicate or Display:** **Outdoor Unit : E.5 U.1** **Indoor Unit : Operation LED 4 times Flash, Timer LED 2 Times Flash, Filter LED Continuous Flash.** **Error Code : 4 2**

Detective Actuators:	**Detective details:**
Indoor Unit Controller PCB Circuit Heat Exchanger Inlet temp. Sensor	When open or shorted Heat Exchanger Inlet temp. sensor is detected

Forecast of Cause :

1. Connector defective connection 2. Sensor defective 3. Controller PCB defective

Check Point 1 : Check connection of Connector

- ☐ Check if connector is loose or removed
- ☐ Check erroneous connection
- ☐ Check if thermistor cable is open

>>Reset Power when reinstalling due to removed connector or incorrect wiring.

OK

Check Point 2 : Remove connector and check sensor resistance value

Sensor Characteristics (Rough value)

Temperature (°C)	0	5	10	15	20	25	30	35
Resistance Value (kΩ)	168.6	129.8	100.9	79.1	62.5	49.8	40.0	32.4
Voltage Value (V)	1.14	1.39	1.65	1.93	2.22	2.50	2.77	3.03

Temperature (°C)	40	45	50
Resistance Value (kΩ)	26.3	21.6	17.8
Voltage Value (V)	3.27	3.49	3.69

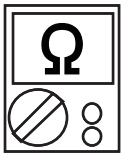

▶ **If Thermistor is either open or shorted, replace it and reset the power.**

OK

Check Point 3 : Check voltage of Controller PCB (DC5.0V)

Corresponding connector

Model Type	Heat Ex Inlet temp. Sensor (Black Wires)
Cassette type	CN5 or CN9
Duct type	CN5 or CN9
Ceiling type	CN5
Wall mounted type	CN5 or CN9
Floor / Ceiling type	CN5
Compact Floor type	CN5

▶ **If the voltage does not appear, replace Controller PCB and set up the original address.**

Troubleshooting 23 E42. 3 **INDOOR UNIT Error Method:** **Indoor unit Heat Ex. outlet temp. Sensor Error**	**Indicate or Display:** **Outdoor Unit : E.5 U.1** **Indoor Unit : Operation LED 4 times Flash, Timer LED 2 Times Flash, Filter LED Continuous Flash.** **Error Code : 4 2**

Detective Actuators:	**Detective details:**
Indoor Unit Controller PCB Circuit Heat Exchanger Outlet Temp. Sensor	When open or shorted Heat Exchanger outlet temp. sensor is detected

Forecast of Cause :

1. Connector defective connection 2.Sensor defective 3.Controller PCB defective

Check Point 1 : Check connection of Connector

- ☐ Check if connector is loose or removed
- ☐ Check erroneous connection
- ☐ Check if Sensor cable is open

>>Reset Power when reinstalling due to removed connector or incorrect wiring.

OK

Check Point 2 : Remove connector and check sensor resistance value

Sensor Characteristics (Rough value)

Temperature (°C)	0	5	10	15	20	25	30	35
Resistance Value (kΩ)	168.6	129.8	100.9	79.1	62.5	49.8	40.0	32.4
Voltage Value (V)	1.14	1.39	1.65	1.93	2.22	2.50	2.77	3.03

Temperature (°C)	40	45	50
Resistance Value (kΩ)	26.3	21.6	17.8
Voltage Value (V)	3.27	3.49	3.69

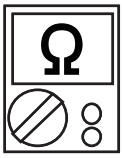

▶ **If Thermistor is either open or shorted, replace it and reset the power.**

OK

Check Point 3 : Check voltage of Controller PCB (DC5.0V)

Corresponding connector

Model Type	Heat Ex Outlet temp. Sensor (Gray Wires)
Cassette type	CN5 or CN9
Duct type	CN5 or CN9
Ceiling type	CN5
Wall mounted type	CN5 or CN9
Floor / Ceiling type	CN5
Compact Floor type	CN5

▶ **If the voltage does not appear, replace Controller PCB and set up the original address.**

Troubleshooting 24 E51. 2 **INDOOR UNIT Error Method:** **Indoor Unit Fan Motor 1 rotation speed Error**	**Indicate or Display:** **Outdoor Unit : E.5 U.1** **Indoor Unit : Operation LED 5 times Flash, Timer LED 1 Times Flash, Filter LED Continuous Flash.** **Error Code : 5 1**
Detective Actuators: Indoor Unit Controller PCB Circuit Indoor Fan Motor	**Detective details:** When the FAN motor feed back rotation value which is detecting on the controller PCB becomes 0 and lasts for more than 1 minute at motor opera tion condition. Or, when the feed back rotation value contimues at 1/ 3 of target value for more than 1 minute.

Forecast of Cause : 1. Fan rotation failure 2. Fan motor winding open 3. Motor protection by ambient temp. increase 4. Capacitor failure 5. Controller PCB failure

Check Point 1 : Check rotation of Fan

- ☐ Rotate the fan by hand when operation is off.
  (Check if fan is caught, dropped off or locked motor)
  >>If Fan or Bearing is abnormal, replace it.

↓ **OK**

Check Point 2 : Check Motor winding / Internal PCB circuit

- ☐ Check Indoor Fan motor **(Refer to the PARTS INFORMATION 19,20)**
  >>If Fan motor is abnormal, replace it.

↓ **OK**

Check Point 3 : Check ambient temp. around motor

- ☐ Check excessively high temperature around the motor.
  (If there is any surrounding equipment that causes heat)
  >>Upon the temperature coming down, restart operation.,

↓ **OK**

Check Point 4 : Check Motor Capacitor (*)

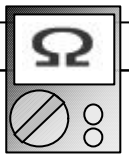

- ☐ Check continuity of motor capacitor
  >>If it is shorted, replace the capacitor.

* Applicable indoor unit:
- ARXC type

↓ **OK**

Check Point 5 : Replace Controller PCB

- ☐ Change Controller PCB and set up the original address.

Troubleshooting 25 E52. 1 INDOOR UNIT Error Method: Coil (Expansion valve) Error	Indicate or Display: Outdoor Unit : E.5U.1 Indoor Unit : Operation LED 5 times Flash, Timer LED 2 Times Flash, Filter LED Continuous Flash. Error Code : 5 2

Detective Actuators:	Detective details:
Indoor unit controller PCB	When the EEV1 drive circuit is open circuit

Forecast of Cause :

1. EEV1 coil lose connection 2. EEV1 wire(s) cut or pinched 3. Defective EEV1 coil
4. Controller PCB (DC 12V) output abnormal 5. Noise momentary open, voltage drop

Check Point 1 : Check the connection of EEV1 connector

- ☐ Check If the connector CN 10 or CN 750 is lose connection or not

↓ OK

Check Point 2 : Check the EEV1 wire

- ☐ Check if the wire of EEV1 has damege or not (Slash, Braking of wire, Pinching, etc.)

→ NG → Replace EEV1 coil

↓ OK

Check Point 3 : Check the EEV1 Coil

- ☐ Check if the circuit of EEV coil winding is good or not (Refer to the service parts Information 13)

→ NG → Replace EEV1 coil

↓ OK

Check Point 4 : Check the output of EEV1 on the Main PCB

- ☐ Check if the DC 12 is on between the pin No.1 of CN10 or CN750 and GND Pin No.5 or 6 on CNB01.
  (Disconnect the wire of EEV1 when you check the output of EEV1)

→ NG → Replace Min PCB

↓ OK

Check Point 5 : Noise, momentary open, voltage drop

- ☐ Check if temporary voltage drop was not generated.
- ☐ Check if momentary open was not generated.
- ☐ Check if ground is connection correctly or there are no related cables near the power line.

Troubleshooting 26 E53. 1 **INDOOR UNIT Error Method:** **Indoor unit Drain pump Error**	**Indicate or Display:** **Outdoor Unit : E.5 U.1** **Indoor Unit : Operation LED 5 times Flash, Timer LED 3 Times Flash, Filter LED Continuous Flash.** **Error Code : 5 3**
Detective Actuators: Indoor Unit Controller PCB Circuit Float Switch	**Detective details:** When Float switch is ON for more than 3 minutes.

Forecast of Cause : 1. Drain Installation 2. Drain pipe line blockage 3. Float switch defective 4. Shorted connector/wire 5. Controller PCB defective / Drain pump defective

Check Point 1 : Check Drain pipe installation

- ☐ Check Drain pipe installation (Refer to the installaion manual)
  The Height limit for Drain pump, The angle of drain pipe, The angle of indoor unit

OK

Check Point 2 : Check Drain pipe blockage

- ☐ Check Drain pipe line blockage
  The drain pump inlet and outlet, The connecting pipe, The drain pipe outlet

OK

Check Point 3, 4 : Check Float Switch operation, connecting wire shorted.

- ☐ Check operation of float switch.
  Remove Float switch and check ON/OFF switching operation by using a meter.
  >>If Float switch is defective, replace it.

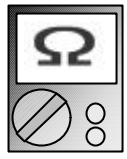

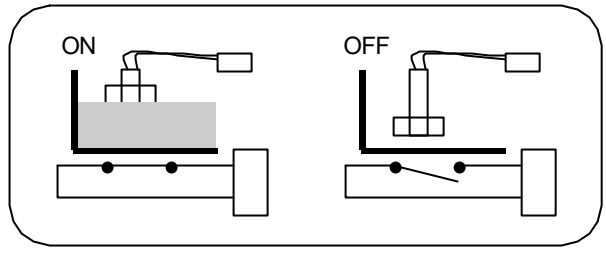

OK

Check Point 5 : Check controller PCB defective / Drain pump defective

- ☐ With the Float SW ON, measure the drain pump power (AC230V) of the power PCB (CN106) or main PCB (CN71).
  >>If No voltage on the connector, replace the power supply PCB
  >>If AC230V on the connector, replace the Drain pump

Troubleshooting 27 E61. 5 **OUTDOOR UNIT Error Method:** **Outdoor Unit Reverse Phase, Missing Phase Wire Error**	**Indicate or Display:** **Outdoor Unit : E. 6 1. 5** **Indoor Unit : Operation LED 9 times Flash, Timer LED 15 Times Flash, Filter LED Continuous Flash.** **Error Code : 9 U / 6 1**

Detective Actuators:	**Detective details:**
Outdoor unit Main PCB	▪ Reverse phase prevention circuit detected reversed phase input or input was not normal at the time of power ON. ▪ Reverse phase prevention circuit detected open-phase after power ON.

Forecast of Cause :
1. Noise, momentary open, voltage drop
2. Power supply defective
3. Filter PCB (Main) defective
4. Main PCB defective

Check Point 1 : Noise, momentary open, voltage drop

- ☐ Check if temporary voltage drop was not generated.
- ☐ Check if momentary open was not generated.
- ☐ Check if ground is connection correctly or there are no related cables near the power line.

↓ **OK**

Check Point 2 : Check the power supply

- ☐ Power cable connection, open check

↓ **OK**

Check Point 3 : Check Filter PCB (Main) and Main PCB

- ☐ Check Filter PCB (Main) and Main PCB.
  (Refer to "Service Parts Information 3 ".)

Troubleshooting 28 E62. 3 **OUTDOOR UNIT Error Method:** **Outdoor Unit EEPROM Access Error**	**Indicate or Display:** **Outdoor Unit : E. 6 2. 3** **Indoor Unit : Operation LED 9 times Flash, Timer LED 15 Times Flash, Filter LED Continuous Flash.** **Error Code : 9 U / 6 2**

Detective Actuators:	**Detective details:**
Outdoor unit Main PCB	▪Access to EEPROM failed due to some cause after outdoor unit started.

Forecast of Cause : 1. Noise, momentary open, voltage drop 2. Main PCB defective

Check Point 1-1 :
Turn the power on again

Error displayed again?

NO →

Check Point 1-2 : Noise, momentary open, voltage drop

- ☐ Check if temporary voltage drop was not generated.
- ☐ Check if momentary open was not generated.
- ☐ Check if ground is connection correctly or there are no related cables near the power line.

↓ **YES**

Check Point 2 : Replace Main PCB

- ☐ Change Main PCB and set up the original address.

Troubleshooting 29 E62. 6 **OUTDOOR UNIT Error Method:** **Inverters Communication Error**	**Indicate or Display:** **Outdoor Unit : E. 6 2. 6** **Indoor Unit : Operation LED 9 times Flash, Timer LED 15 Times Flash, Filter LED Continuous Flash.** **Error Code : 9 U / 6 2**

Detective Actuators:	**Detective details:**
Outdoor unit Main PCB, Inverter PCB	▪Communication not received from Inverter PCB for 10 seconds or more

Forecast of Cause : 1. Noise 2. Main PCB to Inverter PCB wiring connection defective 3. Main PCB defective 4. Inverter PCB defective

Check Point 1-1 :
Turn the power on again

Error displayed again?

NO →

Check Point 1-2 : Noise

- ☐ Check if ground is connection correctly or there are no related cables near the power line.

↓ **YES**

Check Point 2 : Check the main PCB to Inverter PCB wiring

- ☐ Connector connection state check
- ☐ Cable open check

↓ **OK**

Check Point 3 : Check Main PCB

- ☐ Chack Main PCB. (Refer to "Servise Parts Information 3")

↓ **OK**

Check Point 4 : Replace Inverter PCB

- ☐ Replace Inverter PCB. (Refer to "Servise Parts Information 4")

Caution
By changing of DIP SW 4-2 to ON, the Back-up operation can start when the active outdoor unit exists on the multi outdoor unit connection. (Stand alone outdoor unit is impossible)
The following conditions will be concerned in use of back-up operation. (Please do not use the system with back-up operation for long time.)
- The operating compressor life time becomes shorter.
- The operating performance may drop due to the limited active compressor(s).
- The compressor may stop frequently by protection controlling.

*In order to keep the operating capacity, the release of the Low noise mode setting might be necessary.

Troubleshooting 30 E62. 8 **OUTDOOR UNIT Error Method:** **EEPROM data corrupted error**	**Indicate or Display:** **Outdoor Unit : E. 6 2. 8** **Indoor Unit : Operation LED 9 times Flash, Timer LED 15 Times Flash, Filter LED Continuous Flash.** **Error Code : 9 U / 6 2**

Detective Actuators:	**Detective details:**
Outdoor unit Main PCB	▪ Set contents sum value memorized in EEPROM and sum value calculated based on the set contents read from EEPROM do not match * Regarding the sum value, only the contents set in the push button SW setting mode (F2) shall be the objective.

Forecast of Cause : 1. Noise, momentary open, voltage drop 2. Main PCB defective

Check Point 1-1 : Turn the power on again.

Error generated again after Field setting all clear (push button SW F3 (function mode) -35 execution) and the power was turned back on?

YES → Check Point 2

NO →

Check Point 1-2 : Noise, momentary open, voltage drop

- ☐ Check if temporary voltage drop was not generated.
- ☐ Check if momentary open was not generated.
- ☐ Check if ground is connection correctly or there are no related cables near the power line.

Reconfigure the setting of F2 (setting mode) by push button SW
* To clear the setting of F2 by Field setting all clear.

Check Point 2 : Replace Main PCB

- ☐ Change Main PCB and set up the original address.

Troubleshooting 31 E63. 1 **OUTDOOR UNIT Error Method:** Inverter Error	**Indicate or Display:** Outdoor Unit : E. 6 3. 1 Indoor Unit : Operation LED 9 times Flash, Timer LED 15 Times Flash, Filter LED Continuous Flash. Error Code : 9 U / 6 3

Detective Actuators:	**Detective details:**
Inverter PCB	▪ Error information received from Inverter PCB. ▪ When "Inverter PCB short interruption detection" or "Rush current limiting resistor temp. rise protection" occurs, Inverter error also occurs.

Forecast of Cause :

1. Noise, momentary open, voltage drop.
2. Power supply to Filter PCB (INV) to Inverter PCB wiring disconnection, open
3. Main PCB to Inverter PCB wiring disconnection, open
4. Magnetic Relay (for inverter) coil side wiring disconnection, open
5. Magnetic Relay activation circuit defective
6. Main PCB or Filter PCB (INV) or Inverter PCB defective
7. Cement Resistor Open circuit

Check Point 1-1 : Turn the power on again

Error displayed again?

NO → **Check Point 1-2 : Noise, momentary open, voltage drop**

- ☐ Check if temporary voltage drop was not generated.
- ☐ Check if momentary open was not generated.
- ☐ Check if ground is connection correctly or there are no related cables near the power line.

YES ↓

Check Point 2 : Check error display

"Inverter PCB short interruption detection" or "Rush current limiting resistor temp. rise protection" also occur?

YES → In case of "Inverter PCB short interruption detection", Refer to the Trouble shooting 32. In case of "Rush current limiting resistor temp. rise protection", Refer to the Trouble shooting 33.

NO ↓

Check Point 3 : Check the wiring (Power supply to Filter PCB (INV) to Inverter PCB)

- ☐ Connector and wiring connection state check
- ☐ Cable open check

OK ↓

Check Point 4 : Check the wiring (Main PCB to Inverter PCB)

- ☐ Connector and wiring connection state check
- ☐ Cable open check

OK ↓

Check Point 5 : Check Cement resistor

- ☐ Check resistance of cement resistor
  If the circuit of both terminal was open circuit, exchange the Resistor
  Correct resistance value: 5.3 - 6.0 Ohm

OK ↓

Check Point 6 : Check Filter PCB (INV) and Inverter PCB

- ☐ Check Filter PCB (INV) and Inverter PCB.
  (Refer to "Service Parts Information 4".)

Caution

By changing of DIP SW 4-2 to ON, the Back-up operation can start when the active outdoor unit exists on the multi outdoor unit connection. (Stand alone outdoor unit is impossible)

The following conditions will be concerned in use of back-up operation. (Please do not use the system with back-up operation for long time.)

- The operating compressor life time becomes shorter.
- The operating performance may drop due to the limited active compressor(s).
- The compressor may stop frequently by protection controlling.

*In order to keep the operating capacity, the release of the Low noise mode setting might be necessary.

Troubleshooting 32 E67. 2 **OUTDOOR UNIT Error Method:** **Inverter PCB short interruption Error**	**Indicate or Display:** **Outdoor Unit : E. 6 7. 2** **Indoor Unit : No Display** **Error Code : No display**

Detective Actuators:	**Detective details:**
Inverter PCB	・ "Short interruption" received from Inverter PCB

Forecast of Cause :
1. Noise, momentary power failure, voltage drop
2. Magnetic Relay (for Inverter) coil side wiring disconnection, open
3. Power supply to Filter PCB (INV) to Inverter PCB wiring disconnection, open
4. Main PCB defective 5. Inverter PCB defective

Check Point 1 : Noise, momentary power failure, voltage drop

- ☐ Check if temporary voltage drop was not generated.
- ☐ Check if momentary power failure was not generated.
- ☐ Check if ground is connection correctly or there are no related cables near the power line.

↓ **OK**

Check Point 2 : Check the magnetic contactor (for Inverter) coil side wiring

- ☐ Connector and wiring connection state check
- ☐ Cable open check

↓ **OK**

Check Point 3 : Check the wiring (Power supply to Filter PCB (INV) to Inverter PCB)

- ☐ Connector and wiring connection state check
- ☐ Cable open check

↓ **OK**

Check Point 4 : Check Main PCB

- ☐ Chack Main PCB. (Refer to "Sarvise Parts Information 4")

↓ **OK**

Check Point 5 : Replace Inverter PCB

- ☐ Replace Inverter PCB.

Troubleshooting 33 E68. 2 **OUTDOOR UNIT Error Method:** **Rush Current Limiting Resistor Temp Rise Protection**	**Indicate or Display:** **Outdoor Unit : E. 6 8. 2** **Indoor Unit : Operation LED 9 times Flash, Timer LED 15 Times Flash, Filter LED Continuous Flash.** **Error Code : 9 U / 6 8**

Detective Actuators:	**Detective details:**
Inverter PCB	▪ "Protection stop by "Rush current limiting resistor temperature rise detection" of inverter PCB" was generated 2 times.

Forecast of Cause :
1. Magnetic relay (for INV) coil side wiring disconnection, open
2. Power supply to Filter PCB (INV) to Inverter PCB wiring disconnection, open
3. Magnetic relay activation circuit defective
4. Main PCB to Inverter PCB wiring disconnection, open
5. Main PCB output AC230V on CN130 defective
   Main PCB defective (output AC230V on CN130 for Magnetic relay (INV) defective)

Check Point 1 : Check the magnetic relay (for invertert) coil side wiring
- ☐ Connector and wiring connection state check
- ☐ Cable open check

↓ **OK**

Check Point 2 : Check Power supply to Filter PCB (INV) to inverter PCB wiring
- ☐ Connector and wiring connection state check
- ☐ Cable open check

↓ **OK**

Check Point 3-1 : Magnetic relay activation circuit
- ☐ Chack the DC Voltage (12V) of CN330 on INVERTER PCB

→ **NG** → Replace Inverter PCB

↓ **OK**

Check Point 4 : Check the wiring (Main PCB to Inverter PCB)
- ☐ Check the wiring connection.
  (CN138 on Main PCB to CN330 on Inverter PCB)

↓ **OK**

Check Point 5 : Main PCB output AC230V for Magnetic relay
- ☐ Check the AC230V of CN130 on Main PCB

↓ **OK**

Check Point 6 : Replace Main PCB
- ☐ Change Main PCB and set up the original address.

After fixing the problem and for canceling the Error, Error Reset (F3-40) will be required after power reset

Caution
By changing of DIP SW 4-2 to ON, the Back-up operation can start when the active outdoor unit exists on the multi outdoor unit connection.
(Stand alone outdoor unit is impossible)
The following conditions will be concerned in use of back-up operation. (Please do not use the system with back-up operation for long time.)
- The operating compressor life time becomes shorter.
- The operating performance may drop due to the limited active compressor(s).
- The compressor may stop frequently by protection controlling.

*In order to keep the operating capacity, the release of the Low noise mode setting might be necessary.

Troubleshooting 34 E69. 1 **OUTDOOR UNIT Error Method:** **Outdoor Unit Transmission PCB Parallel Communication Error**	**Indicate or Display:** **Outdoor Unit : E. 6 9. 1** **Indoor Unit : Operation LED 9 times Flash, Timer LED 15 Times Flash, Filter LED Continuous Flash. / Operation LED 1 time Flash, Timer LED 4 Times Flash, Filter LED Continuous Flash.** **Error Code : 9 U / 6 9 / 1 4 / 14.1 / 14.3***

*When this error occurs on the Slave outdoor unit, Error code 69.1 is transfered to each device on the network.
When this error occures on the Master outdoor unit, the indoor unit on the network indicates 14 (14.3 No communication from Outdoor unit), and Service tool indicates 14.1 (Outdoor unit Netwrok communication Error).

Detective Actuators:	**Detective details:**
Outdoor unit Main PCB	▪When Parallel communication error (Communication reset occurs continuously more than specified times) is detected.

Forecast of Cause : 1. Noise 2. Communication PCB connection defective 3. Communication PCB defective 4. Main PCB defective

Check Point 1-1 : Turn the power on again.

Error displayed again?

NO → **Check Point 1-2 : Noise**

- ☐ Check if ground is connection correctly or there are no related cables near the power line.

YES ↓

Check Point 2 : Check the communication PCB connection

- ☐ Communication PCB connection (Lose connection) check

OK ↓

Check Point 3 : Check the communication PCB

- ☐ Communication PCB check
  No any damages on the PCB, replace the communication PCB.

OK ↓

Check Point 4 : Replace Main PCB

- ☐ Change Main PCB and set up the original address.

Troubleshooting 35 E71. 1 **OUTDOOR UNIT Error Method:** **Discharge Temp. Sensor 1 Error**	**Indicate or Display:** **Outdoor Unit : E. 7 1. 1** **Indoor Unit : Operation LED 9 times Flash, Timer LED 15 Times Flash, Filter LED Continuous Flash.** **Error Code : 9 U / 7 1**

Detective Actuators:	**Detective details:**
Discharge temp. sensor 1	・ Discharge temp. sensor 1 short detected ・ Discharge temp. sensor 1 open detected after compressor 1 operated continuously for 5 minutes or more

Forecast of Cause :
1. Connector connection defective, open
2. Sensor defective
3. Main PCB defective

Check Point 1 : Check the connector connection and cable open

- ☐ Connector connection state check
- ☐ Cable open check

OK

Check Point 2 : Check the sensor

- ☐ Sensor characteristics check (Disconnect the sensor from the PCB and check.)
  * For the sensor characteristics, refer to the "Service Parts Information 24".

OK

Check Point 3 : Check voltage of Main PCB (DC5.0V)

- ☐ Main PCB (CN162: 1-2) voltage value = 5V
  Remove the sensor from Main PCB, check the voltage.

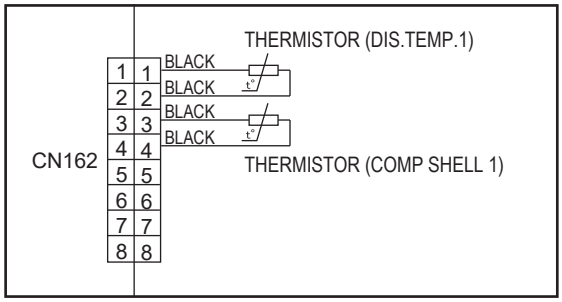

Discharge temp. sensor 1 (CN162: 1-2)

►**If the voltage does not appear, replace Main PCB and set up original address.**

Caution
By changing of DIP SW 4-2 to ON, the Back-up operation can start when the active outdoor unit exists on the multi outdoor unit connection. (Stand alone outdoor unit is impossible)
The following conditions will be concerned in use of back-up operation. (Please do not use the system with back-up operation for long time.)
- The operating compressor life time becomes shorter.
- The operating performance may drop due to the limited active compressor(s).
- The compressor may stop frequently by protection controlling.

*In order to keep the operating capacity, the release of the Low noise mode setting might be necessary.

Troubleshooting 36 E72. 1 **OUTDOOR UNIT Error Method:** **Compressor Temp Sensor 1 Error**	**Indicate or Display:** **Outdoor Unit : E. 7 2. 1** **Indoor Unit : Operation LED 9 times Flash, Timer LED 15 Times Flash, Filter LED Continuous Flash.** **Error Code : 9 U / 7 2**

Detective Actuators:	**Detective details:**
Compressor temp. sensor 1	▪ Compressor temp. sensor 1 short detected ▪ Compressor temp. sensor 1 open detected after compressor 1 operated continuously for 5 minutes or more

Forecast of Cause :
1. Connector connection defective, open
2. Sensor defective
3. Main PCB defective

Check Point 1 : Check the connector connection and cable open

- ☐ Connector connection state check
- ☐ Cable open check

OK

Check Point 2 : Check the sensor

- ☐ Thermistor characteristics check (Disconnect the sensor from the PCB and check.)
  * For the sensor characteristics, refer to the "Service Parts Information 24".

OK

Check Point 3 : Check voltage of Main PCB (DC5.0V)

- ☐ Main PCB (CN162: 3-4) voltage value = 5V
  Remove the sensor from Main PCB, check the voltage.

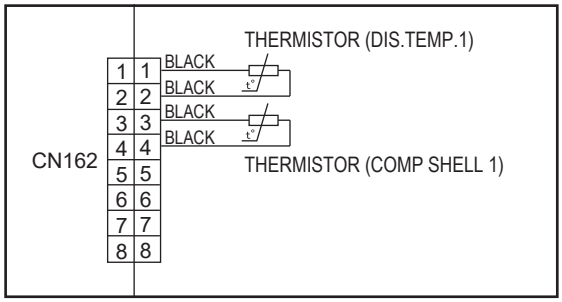

Compressor temp. sensor 1 (CN162: 3-4)

►**If the voltage does not appear, replace Main PCB and set up original address.**

Caution
By changing of DIP SW 4-2 to ON, the Back-up operation can start when the active outdoor unit exists on the multi outdoor unit connection. (Stand alone outdoor unit is impossible)
The following conditions will be concerned in use of back-up operation. (Please do not use the system with back-up operation for long time.)
- The operating compressor life time becomes shorter.
- The operating performance may drop due to the limited active compressor(s).
- The compressor may stop frequently by protection controlling.

*In order to keep the operating capacity, the release of the Low noise mode setting might be necessary.

Troubleshooting 37 E73.4 **OUTDOOR UNIT Error Method:** **Heat Ex.1 Gas Temp Sensor Error**	**Indicate or Display:** **Outdoor Unit : E. 7 3. 4** **Indoor Unit : Operation LED 9 times Flash, Timer LED 15 Times Flash, Filter LED Continuous Flash.** **Error Code : 9 U / 7 3**

Detective Actuators:	**Detective details:**
Heat ex.1 gas temp. sensor	・ Heat ex.1 gas temp. sensor short or open detected

Forecast of Cause :
1. Connector connection defective, open
2. Sensor defective
3. Main PCB defective

Check Point 1 : Check the connector connection and cable open

- ☐ Connector connection state check
- ☐ Cable open check

OK

Check Point 2: Check the sensor

- ☐ Sensor characteristics check (Disconnect the sensor from the PCB and check.)
  * For the sensor characteristics, refer to the "Service Parts Information 24".

OK

Check Point 3 : Check voltage of Main PCB (DC5.0V)

- ☐ Main PCB (CN163: 3-4) voltage value = 5V
  Remove the sensor from Main PCB, check the voltage.

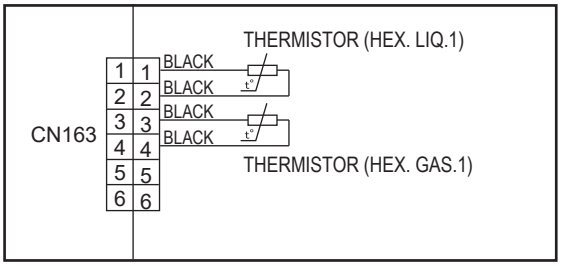

Heat ex.1 gas temp. sensor (CN163: 3-4)

►**If the voltage does not appear, replace Main PCB and set up original address.**

Caution
By changing of DIP SW 4-2 to ON, the Back-up operation can start when the active outdoor unit exists on the multi outdoor unit connection.
(Stand alone outdoor unit is impossible)
The following conditions will be concerned in use of back-up operation. (Please do not use the system with back-up operation for long time.)
- The operating compressor life time becomes shorter.
- The operating performance may drop due to the limited active compressor(s).
- The compressor may stop frequently by protection controlling.

*In order to keep the operating capacity, the release of the Low noise mode setting might be necessary.

Troubleshooting 38 E 73. 5 **OUTDOOR UNIT Error Method:** **Heat Ex.1 Liquid Temp Sensor Error**	**Indicate or Display:** **Outdoor Unit : E. 7 3. 5** **Indoor Unit : Operation LED 9 times Flash, Timer LED 15 Times Flash, Filter LED Continuous Flash.** **Error Code : 9 U / 7 3**

Detective Actuators:	**Detective details:**
Heat ex.1 liquid temp. sensor	・ Heat ex.1 liquid temp. sensor short or open detected

Forecast of Cause :
1. Connector connection defective, open
2. Sensor defective
3. Main PCB defective

Check Point 1 : Check the connector connection and cable open

- ☐ Connector connection state check
- ☐ Cable open check

↓ **OK**

Check Point 2: Check the sensor

- ☐ Sensor characteristics check (Disconnect the sensor from the PCB and check.)
  * For the sensor characteristics, refer to the "Service Parts Information 24".

↓ **OK**

Check Point 3 : Check voltage of Main PCB (DC5.0V)

- ☐ Main PCB (CN163: 1-2) voltage value = 5V
  Remove the sensor from Main PCB, check the voltage.

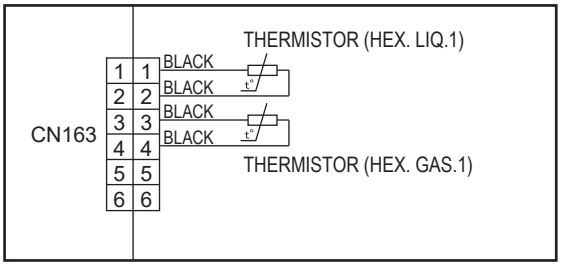

Heat ex.1 liquid temp. sensor (CN163: 1-2)

► **If the voltage does not appear, replace Main PCB and set up original address.**

Troubleshooting 39 E73. 6 **OUTDOOR UNIT Error Method:** **Heat Ex.2 Gas Temp Sensor Error**	**Indicate or Display:** **Outdoor Unit : E. 7 3. 6** **Indoor Unit : Operation LED 9 times Flash, Timer LED 15 Times Flash, Filter LED Continuous Flash.** **Error Code : 9 U / 7 3**

Detective Actuators:	**Detective details:**
Heat ex.2 gas temp. sensor	・ Heat ex.2 gas temp. sensor short or open detected

Forecast of Cause :
1. Connector connection defective, open
2. Sensor defective
3. Main PCB defective

Check Point 1 : Check the connector connection and cable open

- ☐ Connector connection state check
- ☐ Cable open check

OK

Check Point 2: Check the sensor

- ☐ Sensor characteristics check (Disconnect the sensor from the PCB and check.)
  * For the sensor characteristics, refer to the "Service Parts Information 24".

OK

Check Point 3 : Check voltage of Main PCB (DC5.0V)

- ☐ Main PCB (CN164: 3-4) voltage value = 5V
  Remove the sensor from Main PCB, check the voltage.

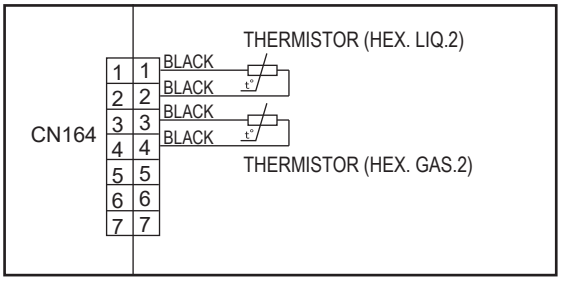

Heat ex.2 gas temp. sensor (CN164: 3-4)

►**If the voltage does not appear, replace Main PCB and set up original address.**

Caution
By changing of DIP SW 4-2 to ON, the Back-up operation can start when the active outdoor unit exists on the multi outdoor unit connection. (Stand alone outdoor unit is impossible)
The following conditions will be concerned in use of back-up operation. (Please do not use the system with back-up operation for long time.)
- The operating compressor life time becomes shorter.
- The operating performance may drop due to the limited active compressor(s).
- The compressor may stop frequently by protection controlling.

*In order to keep the operating capacity, the release of the Low noise mode setting might be necessary.

Troubleshooting 40 E73. 7 **OUTDOOR UNIT Error Method:** **Heat Ex.2 Liquid Temp Sensor Error**	**Indicate or Display:** **Outdoor Unit : E. 7 3. 7** **Indoor Unit : Operation LED 9 times Flash, Timer LED 15 Times Flash, Filter LED Continuous Flash.** **Error Code : 9 U / 7 3**

Detective Actuators:	**Detective details:**
Heat ex.2 liquid temp. sensor	・ Heat ex.2 liquid temp. sensor short or open detected

Forecast of Cause :
1. Connector connection defective, open
2. Sensor defective
3. Main PCB defective

Check Point 1 : Check the connector connection and cable open

- ☐ Connector connection state check
- ☐ Cable open check

OK

Check Point 2: Check the sensor

- ☐ Sensor characteristics check (Disconnect the sensor from the PCB and check.)
  * For the sensor characteristics, refer to the "Service Parts Information 24".

OK

Check Point 3 : Check voltage of Main PCB (DC5.0V)

- ☐ Main PCB (CN164: 1-2) voltage value = 5V
  Remove the sensor from Main PCB, check the voltage.

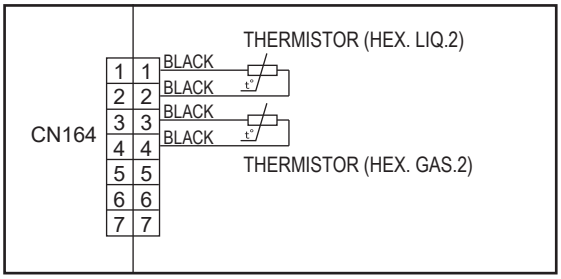

Heat ex.2 liquid temp. sensor (CN164: 1-2)

►**If the voltage does not appear, replace Main PCB and set up original address**

Troubleshooting 41 E74. 1 **OUTDOOR UNIT Error Method:** **Outdoor Temp Sensor Error**	**Indicate or Display:** **Outdoor Unit : E. 7 4. 1** **Indoor Unit : Operation LED 9 times Flash, Timer LED 15 Times Flash, Filter LED Continuous Flash.** **Error Code : 9 U / 7 4**

Detective Actuators:	**Detective details:**
Outdoor temp. sensor	・ Outdoor temp. sensor short or open detected

Forecast of Cause :
1. Connector connection defective, open
2. Sensor defective
3. Main PCB defective

Check Point 1 : Check the connector connection and cable open

- ☐ Connector connection state check
- ☐ Cable open check

OK

Check Point 2: Check the sensor

- ☐ Sensor characteristics check (Disconnect the sensor from the PCB and check.)
  * For the sensor characteristics, refer to the "Service Parts Information 24".

OK

Check Point 3 : Check voltage of Main PCB (DC5.0V)

- ☐ Main PCB (CN144:1-3) voltage value = 5V
  Remove the sensor from Main PCB, check the voltage.

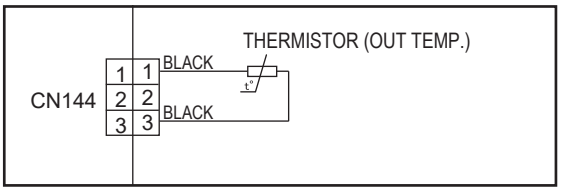

Outdoor temp. sensor (CN144:1-3)

►**If the voltage does not appear, replace Main PCB and set up original address.**

Caution
By changing of DIP SW 4-2 to ON, the Back-up operation can start when the active outdoor unit exists on the multi outdoor unit connection. (Stand alone outdoor unit is impossible)
The following conditions will be concerned in use of back-up operation. (Please do not use the system with back-up operation for long time.)
- The operating compressor life time becomes shorter.
- The operating performance may drop due to the limited active compressor(s).
- The compressor may stop frequently by protection controlling.

*In order to keep the operating capacity, the release of the Low noise mode setting might be necessary.

Troubleshooting 42 E75. 1 **OUTDOOR UNIT Error Method:** **Suction Gas Temp Sensor Error**	**Indicate or Display:** **Outdoor Unit : E. 7 5. 1** **Indoor Unit : Operation LED 9 times Flash, Timer LED 15 Times Flash, Filter LED Continuous Flash.** **Error Code : 9 U / 7 5**

Detective Actuators:	**Detective details:**
Suction gas temp. sensor	・ Suction gas temp. sensor short or open detected

Forecast of Cause :
1. Connector connection defective, open
2. Sensor defective
3. Main PCB defective

Check Point 1 : Check the connector connection and cable open

- ☐ Connector connection state check
- ☐ Cable open check

OK

Check Point 2 : Check the sensor

- ☐ Sensor characteristics check (Disconnect the sensor from the PCB and check.)
  * For the sensor characteristics, refer to the "Service Parts Information 24".

OK

Check Point 3 : Check voltage of Main PCB (DC5.0V)

- ☐ Main PCB (CN165:1-3) voltage value = 5V
  Remove the sensor from Main PCB, check the voltage.

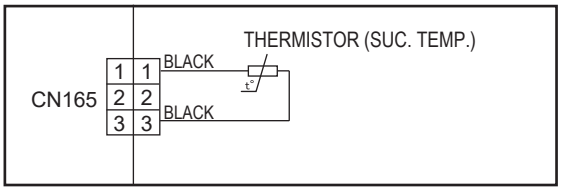

Suction gas temp. sensor (CN165:1-3)

► **If the voltage does not appear, replace Main PCB and set up original address.**

Troubleshooting 43 E77. 1 **OUTDOOR UNIT Error Method:** **Heatsink Temp Sensor Error**	**Indicate or Display:** **Outdoor Unit : E. 7 7. 1** **Indoor Unit : Operation LED 9 times Flash, Timer LED 15 Times Flash, Filter LED Continuous Flash.** **Error Code : 9 U / 7 7**

Detective Actuators:	**Detective details:**
Heatsink temp. sensor	・ Heatsink temp. sensor open/short detected

Forecast of Cause :
1. Connector connection defective, open
2. Sensor defective
3. Inverter PCB defective

Check Point 1 : Check the connector connection and cable open

- ☐ Connector connection state check
- ☐ Cable open check

OK

Check Point 2 : Check the sensor

- ☐ Sensor characteristics check (Disconnect the sensor from the PCB and check.)
  * For the sensor characteristics, refer to the "Service Parts Information 24".

OK

Check Point 3 : Check voltage of Inverter PCB (DC5.0V)

- ☐ Inverter PCB (CN360: 1-2) voltage value = 5V
  Remove the sensor from Inverter PCB, check the voltage.

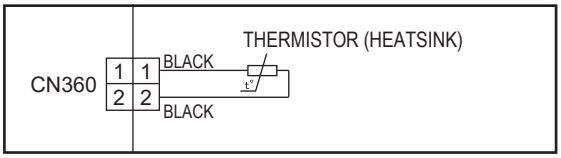

Heatsink temp. sensor (CN360: 1-2)

►**If the voltage does not appear, replace Inverter PCB.**

Caution
By changing of DIP SW 4-2 to ON, the Back-up operation can start when the active outdoor unit exists on the multi outdoor unit connection. (Stand alone outdoor unit is impossible)
The following conditions will be concerned in use of back-up operation. (Please do not use the system with back-up operation for long time.)
- The operating compressor life time becomes shorter.
- The operating performance may drop due to the limited active compressor(s).
- The compressor may stop frequently by protection controlling.

*In order to keep the operating capacity, the release of the Low noise mode setting might be necessary.

Troubleshooting 44 E82. 2 **OUTDOOR UNIT Error Method:** **Sub-cool Heat EX. Gas outlet Temp Sensor Error**	**Indicate or Display:** **Outdoor Unit : E. 8 2. 2** **Indoor Unit : Operation LED 9 times Flash, Timer LED 15 Times Flash, Filter LED Continuous Flash.** **Error Code : 9 U / 8 2**

Detective Actuators:	**Detective details:**
Sub-cooling heat ex. gas outlet temp. sensor	・ Sub-cooling heat ex. gas outlet temp. sensor short or open detected.

Forecast of Cause :
1. Connector connection defective, open
2. Sensor defective
3. Main PCB defective

Check Point 1 : Check the connector connection and cable open

- ☐ Connector connection state check
- ☐ Cable open check

OK

Check Point 2 : Check the sensor

- ☐ Sensor characteristics check (Disconnect the sensor from the PCB and check.)
  * For the sensor characteristics, refer to the "Service Parts Information 24".

OK

Check Point 3 : Check voltage of Main PCB (DC5.0V)

- ☐ Main PCB (CN142: 7-8) voltage value = 5V
  Remove the sensor from Main PCB, check the voltage.

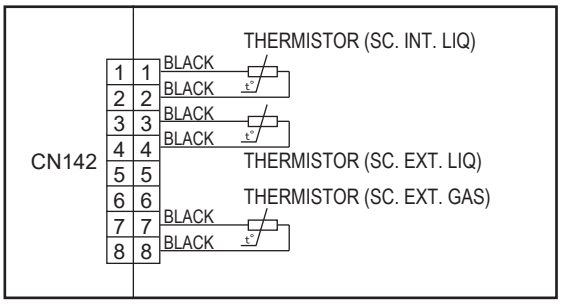

Sub-cooling heat ex. gas outlet temp. sensor (CN142: 7-8)

► **If the voltage does not appear, replace Main PCB and set up original address.**

Troubleshooting 45 E83. 1 **OUTDOOR UNIT Error Method:** **Liquid Pipe Temp. Sensor 1 Error**	**Indicate or Display:** **Outdoor Unit : E. 8 3. 1** **Indoor Unit : Operation LED 9 times Flash, Timer LED 15 Times Flash, Filter LED Continuous Flash.** **Error Code : 9 U / 8 3**

Detective Actuators:	**Detective details:**
Liquid pipe temp. sensor 1	・ Liquid pipe temp. sensor 1 short or open detected

Forecast of Cause :
1. Connector connection defective, open
2. Sensor defective
3. Main PCB defective

Check Point 1 : Check the connector connection and cable open

- ☐ Connector connection state check
- ☐ Cable open check

OK

Check Point 2 : Check the sensor

- ☐ Sensor characteristics check (Disconnect the sensor from the PCB and check.)
  * For the sensor characteristics, refer to the "Service Parts Information 24".

OK

Check Point 3 : Check voltage of Main PCB (DC5.0V)

- ☐ Main PCB (CN142: 1-2) voltage value = 5V
  Remove the sensor from Main PCB, check the voltage.

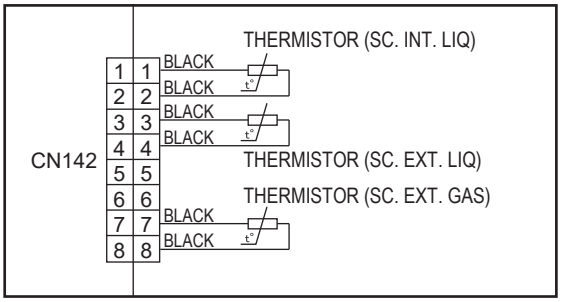

Liquid pipe temp. sensor 1 (CN142: 1-2)

► **If the voltage does not appear, replace Main PCB and set up original address.**

Troubleshooting 46 E83. 2 **OUTDOOR UNIT Error Method:** **Liquid Pipe Temp. Sensor 2 Error**	**Indicate or Display:** **Outdoor Unit : E. 8 3. 2** **Indoor Unit : Operation LED 9 times Flash, Timer LED 15 Times Flash, Filter LED Continuous Flash.** **Error Code : 9 U / 8 3**

Detective Actuators:	**Detective details:**
Liquid pipe temp. sensor 2	・ Liquid pipe temp. sensor 2 short or open detected

Forecast of Cause :
1. Connector connection defective, open
2. Sensor defective
3. Main PCB defective

Check Point 1 : Check the connector connection and cable open

- ☐ Connector connection state check
- ☐ Cable open check

OK

Check Point 2 : Check the sensor

- ☐ Sensor characteristics check (Disconnect the sensor from the PCB and check.)
  * For the sensor characteristics, refer to the "Service Parts Information 24".

OK

Check Point 3 : Check voltage of Main PCB (DC5.0V)

- ☐ Main PCB (CN142: 3-4) voltage value = 5V
  Remove the sensor from Main PCB, check the voltage.

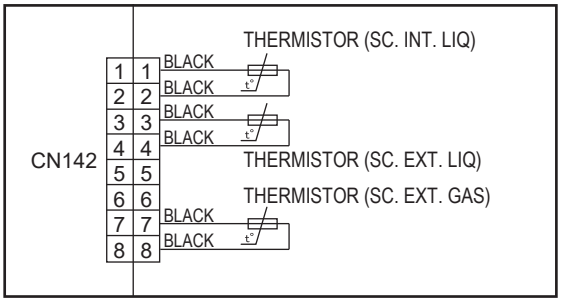

Liquid pipe temp. sensor 2 (CN142: 3-4)

► **If the voltage does not appear, replace Main PCB and set up original address.**

Troubleshooting 47 E84. 1 **OUTDOOR UNIT Error Method:** Current Sensor 1 abnormal	**Indicate or Display:** Outdoor Unit : E. 8 4. 1 Indoor Unit : Operation LED 9 times Flash, Timer LED 15 Times Flash, Filter LED Continuous Flash. Error Code : 9 U / 8 4

Detective Actuators:	**Detective details:**
Judgment from value sensed by current sensor 1 (current sensor for inverter) * Current sensor 1 is mounted on Filter PCB(INV)	・ "Protection stop by "inverter speed ≧20rps and sensor value 0A continued for 1 min"" was generated 2 times ・ Sensor value while inverter stopped = maximum was detected

Forecast of Cause :

1. Power supply defective
2. Power cable disconnection , open
3. Filter PCB (INV) to Inverter PCB CT system wiring connector disconnection, open
4. Power supply to Filter PCB (INV) to Inverter PCB wiring disconnection, open
5. Filter PCB(INV) defective (Power supply section, current sensor section)
6. Inverter PCB defective

Check Point 1 : Check the power supply

- ☐ Main power ON/OFF state check
- ☐ Power cable connection, open check

↓ **OK**

Check Point 2 : Filter PCB(INV) to Inverter PCB CT system wiring connection state

- ☐ Connector and wiring connection state check
- ☐ Cable open check

↓ **OK**

Check Point 3 : Check the wiring (Power supply to Filter PCB (INV) to Inverter PCB)

- ☐ Connector connection state check
- ☐ Cable open check

↓ **OK**

Check Point 4 : Check Filter PCB (INV) and Inverter PCB

- ☐ Chack Filter PCB (INV) and Inverter PCB.
  (Refer to "Service Parts Information 4")

After fixing the problem and for canceling the Error, Error Reset (F3-40) will be required after power reset

Caution

By changing of DIP SW 4-2 to ON, the Back-up operation can start when the active outdoor unit exists on the multi outdoor unit connection. (Stand alone outdoor unit is impossible)

The following conditions will be concerned in use of back-up operation. (Please do not use the system with back-up operation for long time.)

- The operating compressor life time becomes shorter.
- The operating performance may drop due to the limited active compressor(s).
- The compressor may stop frequently by protection controlling.

*In order to keep the operating capacity, the release of the Low noise mode setting might be necessary.

Troubleshooting 48 E86. 1 OUTDOOR UNIT Error Method: Discharge Pressure Sensor Error	Indicate or Display: Outdoor Unit : E. 8 6. 1 Indoor Unit : Operation LED 9 times Flash, Timer LED 15 Times Flash, Filter LED Continuous Flash. Error Code : 9 U / 8 6

Detective Actuators:	Detective details:
Discharge pressure sensor	・When any of the following conditions is satisfied, a discharge pressure sensor error is generated. 1. 30 seconds or more have elapsed since the outdoor unit power was turned on and pressure sensor detected value ＜0.3V continued for 30 seconds or more 2. 30 seconds or more have elapsed since the outdoor unit power was turned on and pressure sensor detected value ≧ 5.0V was detected.

Forecast of Cause :
1. Discharge pressure sensor connector disconnection, open
2. Discharge pressure sensor defective
3. Main PCB defective

Check Point 1 : Check the discharge pressure sensor connection state

- ☐ Connector connection state check
- ☐ Cable open check

↓ **OK**

Check Point 2 : Check the discharge pressure sensor

- ☐ Sensor characteristics check
  * For the characteristics of the discharge pressure sensor, refer to the "Service Parts Information 22".

↓ **OK**

Check Point 3 : Check voltage of Main PCB (DC5.0V)

- ☐ Main PCB (CN118:1-3) voltage value = 5V
  Remove the sensor from Main PCB, check the voltage.

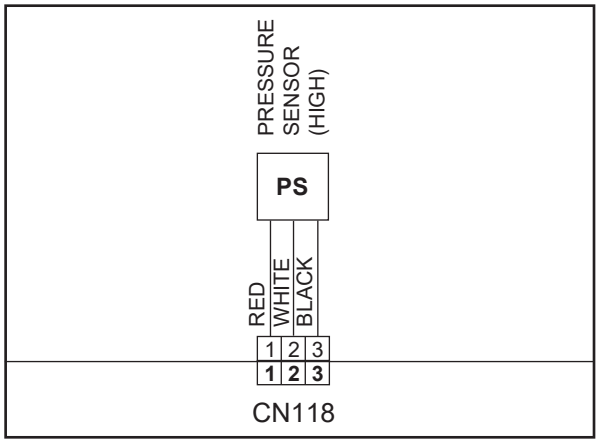

Discharge pressure sensor (CN118:1-3)

► **If the voltage does not appear, replace Main PCB and set up original address.**

Caution
By changing of DIP SW 4-2 to ON, the Back-up operation can start when the active outdoor unit exists on the multi outdoor unit connection. (Stand alone outdoor unit is impossible)
The following conditions will be concerned in use of back-up operation. (Please do not use the system with back-up operation for long time.)
- The operating compressor life time becomes shorter.
- The operating performance may drop due to the limited active compressor(s).
- The compressor may stop frequently by protection controlling.

*In order to keep the operating capacity, the release of the Low noise mode setting might be necessary.

Troubleshooting 49 E86. 3 **OUTDOOR UNIT Error Method:** **Suction Pressure Sensor Error**	**Indicate or Display:** **Outdoor Unit : E. 8 6. 3** **Indoor Unit : Operation LED 9 times Flash, Timer LED 15 Times Flash, Filter LED Continuous Flash.** **Error Code : 9 U / 8 6**

Detective Actuators:	**Detective details:**
Suction pressure sensor	・When any of the following conditions is satisfied, a suction pressure sensor error is generated. 1. 30 seconds or more have elapsed since the outdoor unit power was turned on and pressure sensor detected value ＜ 0.06V continued for 30 seconds or more. 2. 30 seconds or more have elapsed since the outdoor unit power was turned on and pressure sensor detected value ≧ 5.0V was detected.

Forecast of Cause :
1. Suction pressure sensor connector disconnection, open
2. Suction pressure sensor defective
3. Main PCB defective

Check Point 1 : Check the suction pressure sensor connection state

- ☐ Connector connection state check
- ☐ Cable open check

OK

Check Point 2 : Check the suction pressure sensor

- ☐ Sensor characteristics check
  * For the characteristics of the suction pressure sensor, refer to the "Service Parts Information 22".

OK

Check Point 3 : Check voltage of Main PCB (DC5.0V)

- ☐ Main PCB (CN119:1-3) voltage value = 5V
  Remove the sensor from Main PCB, check the voltage.

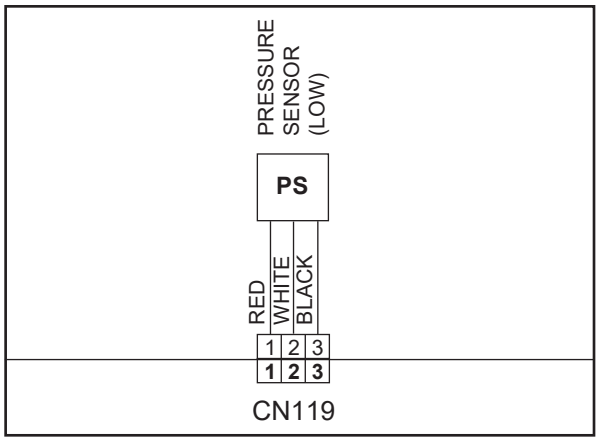

Suction pressure sensor (CN119:1-3)

►**If the voltage does not appear, replace Main PCB and set up original address.**

Caution
By changing of DIP SW 4-2 to ON, the Back-up operation can start when the active outdoor unit exists on the multi outdoor unit connection. (Stand alone outdoor unit is impossible)
The following conditions will be concerned in use of back-up operation. (Please do not use the system with back-up operation for long time.)
- The operating compressor life time becomes shorter.
- The operating performance may drop due to the limited active compressor(s).
- The compressor may stop frequently by protection controlling.

*In order to keep the operating capacity, the release of the Low noise mode setting might be necessary.

Troubleshooting 50 E86. 4 **OUTDOOR UNIT Error Method:** High Pressure Switch 1 Error	**Indicate or Display:** Outdoor Unit : E. 8 6. 4 Indoor Unit : Operation LED 9 times Flash, Timer LED 15 Times Flash, Filter LED Continuous Flash. Error Code : 9 U / 8 6

Detective Actuators:	**Detective details:**
High pressure switch 1	・ When the power was turned on, "high pressure switch 1: open" was detected.

Forecast of Cause :
1. High pressure switch 1 connector disconnection, open
2. High pressure switch 1 characteristics defective
3. Main PCB defective

Check Point 1 : Check the high pressure switch 1 connection state

- ☐ Connector and wiring connection state check
- ☐ Cable open check

↓ **OK**

Check Point 2 : Check the high pressure switch 1 characteristics

- ☐ Switch characteristics check
  * For the characteristics of high pressure switch 1, refer to the "Service Parts Information 23".

↓ **OK**

Check Point 3 : Replace Main PCB

- ☐ Change Main PCB and set up the original address.

Caution
By changing of DIP SW 4-2 to ON, the Back-up operation can start when the active outdoor unit exists on the multi outdoor unit connection. (Stand alone outdoor unit is impossible)
The following conditions will be concerned in use of back-up operation. (Please do not use the system with back-up operation for long time.)
- The operating compressor life time becomes shorter.
- The operating performance may drop due to the limited active compressor(s).
- The compressor may stop frequently by protection controlling.

*In order to keep the operating capacity, the release of the Low noise mode setting might be necessary.

Troubleshooting 51 E93. 1 **OUTDOOR UNIT Error Method:** **Inverter Compressor Start UP Error**	**Indicate or Display:** **Outdoor Unit : E. 9 3. 1** **Indoor Unit : Operation LED 9 times Flash, Timer LED 15 Times Flash, Filter LED Continuous Flash.** **Error Code : 9 U / 9 3**

Detective Actuators:	**Detective details:**
Inverter PCB	▪ "Protection stop by "overcurrent generation at inverter compressor starting" ⇒ restart" generated consecutively 60 times x 2 sets (total 120 times) * The shortest time up to error generation is about 130 minutes * Restart is not performed if an indoor unit in the same refrigerant system is not turned ON by thermostat. * After the end of the 1st set, the 2nd set is not started if all the compressors in the same refrigerant system are not temporarily stopped.

Forecast of Cause :
1. Inverter PCB to inverter compressor wiring disconnection, open
2. Inverter PCB defective
3. Inverter compressor defective (lock, winding short)

Check Point 1 : Check the Inverter PCB to inverter compressor connection state

- ☐ Wiring connection state check
- ☐ Cable open check

↓ **OK**

Check Point 2 : Check the Inverter PCB

- ☐ Inverter PCB check (Refer to Service Parts Information 4)

↓ **OK**

Check Point 3 : Replace the Inverter compressor

- ☐ Inverter compressor replacement

After fixing the problem and for canceling the Error, Error Reset (F3-40) will be required after power reset

Caution
By changing of DIP SW 4-2 to ON, the Back-up operation can start when the active outdoor unit exists on the multi outdoor unit connection. (Stand alone outdoor unit is impossible)
The following conditions will be concerned in use of back-up operation. (Please do not use the system with back-up operation for long time.)
- The operating compressor life time becomes shorter.
- The operating performance may drop due to the limited active compressor(s).
- The compressor may stop frequently by protection controlling.

*In order to keep the operating capacity, the release of the Low noise mode setting might be necessary.

Troubleshooting 52 E94. 1 **OUTDOOR UNIT Error Method:** **Trip Detection**	**Indicate or Display:** **Outdoor Unit : E. 9 4. 1** **Indoor Unit : Operation LED 9 times Flash, Timer LED 15 Times Flash, Filter LED Continuous Flash.** **Error Code : 9 U / 9 4**

Detective Actuators:	**Detective details:**
Inverter PCB	▪ "Protection stop by "overcurrent generation after inverter compressor start processing completed"" generated consecutively 5 times. * The number of generations is reset if protection stop is not generated again within 40 seconds after restarting.

Forecast of Cause :

1. Outdoor unit fan operation defective, foreign matter on hear exchanger, excessive rise of ambient temperature
2. Inverter PCB defective
3. Inverter compressor defective (lock, winding short)

Check Point 1 : Check the outdoor unit fan operation, heat exchanger, ambient temperature

- ☐ No obstructions in air passages?
- ☐ Heat exchange fins clogged
- ☐ Outdoor unit fan motor check
- ☐ Ambient temperature not raised by the effect of other heat sources?
- ☐ Discharged air not sucked in?

↓ **OK**

Check Point 2 : Check the Inverter PCB

- ☐ Inverter PCB check (Refer to Service Parts Information 4)

↓ **OK**

Check Point 3 : Replace the Inverter compressor

- ☐ Inverter compressor replacement

After fixing the problem and for canceling the Error, Error Reset (F3-40) will be required after power reset

Caution
By changing of DIP SW 4-2 to ON, the Back-up operation can start when the active outdoor unit exists on the multi outdoor unit connection. (Stand alone outdoor unit is impossible)
The following conditions will be concerned in use of back-up operation. (Please do not use the system with back-up operation for long time.)
- The operating compressor life time becomes shorter.
- The operating performance may drop due to the limited active compressor(s).
- The compressor may stop frequently by protection controlling.

*In order to keep the operating capacity, the release of the Low noise mode setting might be necessary.

Troubleshooting 53 E95. 5 **OUTDOOR UNIT Error Method:** **Compressor Motor Loss of Synchronization**	**Indicate or Display:** **Outdoor Unit : E. 9 5. 5** **Indoor Unit : Operation LED 9 times Flash, Timer LED 15 Times Flash, Filter LED Continuous Flash.** **Error Code : 9 U / 9 5**

Detective Actuators:	**Detective details:**
Inverter PCB	▪ "Protection stop by "loss of synchronization detection"" generated consecutively 5 times * The number of generations is reset if protection stop is not generated again within 40 seconds after restarting.

Forecast of Cause :
1. Inverter PCB defective
2. Inverter compressor defective (lock)

Check Point 1 : Check the Inverter PCB

☐ Inverter PCB check (Refer to Service Parts Information 4)

↓ **OK**

Check Point 2 : Replace the Inverter compressor

☐ Inverter compressor replacement

After fixing the problem and for canceling the Error, Error Reset (F3-40) will be required after power reset

Caution
By changing of DIP SW 4-2 to ON, the Back-up operation can start when the active outdoor unit exists on the multi outdoor unit connection. (Stand alone outdoor unit is impossible)
The following conditions will be concerned in use of back-up operation. (Please do not use the system with back-up operation for long time.)
- The operating compressor life time becomes shorter.
- The operating performance may drop due to the limited active compressor(s).
- The compressor may stop frequently by protection controlling.

*In order to keep the operating capacity, the release of the Low noise mode setting might be necessary.

Troubleshooting 54 E97. 1 **OUTDOOR UNIT Error Method:** **Outdoor Unit Fan Motor Lock Error**	**Indicate or Display:** **Outdoor Unit : E. 9 7. 1** **Indoor Unit : Operation LED 9 times Flash, Timer LED 15 Times Flash, Filter LED Continuous Flash.** **Error Code : 9 U / 9 7**

Detective Actuators:	**Detective details:**
Outdoor unit fan motor	1. When outdoor fan rotation speed is less than 100rpm in 20 seconds after fan motor starts, fan motor and compressor stops. 2. After fan motor restarts, if the same operation is repeated consecutively 4 times, fan motor and compressor stops permanently.

Forecast of Cause :

1. Rotation obstruction by foreign matter
2. Main PCB to Driver PCB to Fan motor wiring, disconnection, open
3. Fan motor defective (winding open, lock)
4. Driver PCB defective
5. Main PCB defective

Check Point 1 : Fan rotation state check

- ☐ Check for the absence of foreign matter around the fan.

↓ **OK**

Check Point 2 : Main PCB to Driver PCB to Fan motor wiring connection state

- ☐ Connector and wiring connection state check.
- ☐ Check blown fuse of DC FAN motor (5A FUSE)
- ☐ Cable open check. Refer to the service parts information 5

↓ **OK**

Check Point 3 : Fan motor defective

- ☐ Check if fan can be rotated by hand.
- ☐ Motor winding resistance check
- ☐ Motor operation check Refer to the service parts information 21

↓ **OK**

Check Point 4 : Replace Driver PCB

- ☐ Check the appearance of Driver PCB.
- ☐ Change Driver PCB and release the error.
  Check if the error reoccurs on a test run.

↓ **OK**

Check Point 5 : Replace Main PCB

- ☐ Change Main PCB and release the error.
  Check if the error reoccurs on a test run.
  >> If it is abnormal, replace Main PCB.
  (When Main PCB is replaced, set up the original setting by Rotary, Dip, and Push SW)

After fixing the problem and for canceling the Error, Error Reset (F3-40) will be required after power reset

Caution
By changing of DIP SW 4-2 to ON, the Back-up operation can start when the active outdoor unit exists on the multi outdoor unit connection. (Stand alone outdoor unit is impossible)
The following conditions will be concerned in use of back-up operation. (Please do not use the system with back-up operation for long time.)
- The operating compressor life time becomes shorter.
- The operating performance may drop due to the limited active compressor(s).
- The compressor may stop frequently by protection controlling.

*In order to keep the operating capacity, the release of the Low noise mode setting might be necessary.

Troubleshooting 55 E97. 5 **OUTDOOR UNIT Error Method:** **Outdoor Unit Fan Motor Temp. Abnormal**	**Indicate or Display:** **Outdoor Unit : E. 9 7. 5** **Indoor Unit : Operation LED 9 times Flash, Timer LED 15 Times Flash, Filter LED Continuous Flash.** **Error Code : 9 U / 9 7**

Detective Actuators:	**Detective details:**
Driver PCB	1. When outdoor fan motor cannot operate more than 470rpm, fan motor and compressor stops. 2. After fan motor restarts, if fan motor cannot operate at 470rpm or more, or the same operation is repeated consecutively 3 times within 60 minutes, fan motor and compressor stops permanently.

Forecast of Cause :
1. Rotation obstructed by foreign matter
2. Ventilation obstructed by heat exchange foreign matter
3. Excessive ambient temperature rise
4. Static pressure setting incorrect, specifled static pressure value exceeded
5. Driver PCB defective

Check Point 1 : Check fan rotation state

- ☐ Check for the absence of foreign matter around the fan

↓ **OK**

Check Point 2 : Check for obstruction of ventilation by heat exchange foreign matter

- ☐ Check for foreign matter on heat exchanger

↓ **OK**

Check Point 3 : Check the ambient temperature

- ☐ Ambient temperature not raised by the effect of other heat sources?
- ☐ Discharged air not sucked in?

↓ **OK**

Check Point 4 : Check the static pressure

- ☐ Check if static pressure is set correctly.
- ☐ Check if static pressure is not higher than the specified value.

↓ **OK**

Check Point 5 : Replace Driver PCB

- ☐ Check the appearance and condition of mounting of Driver PCB.
- ☐ Change Driver PCB and release the error. Refer to the service parts info 5
  Check if the error reoccurs on a test run.

After fixing the problem and for canceling the Error, Error Reset (F3-40) will be required after power reset

Caution
By changing of DIP SW 4-2 to ON, the Back-up operation can start when the active outdoor unit exists on the multi outdoor unit connection. (Stand alone outdoor unit is impossible)
The following conditions will be concerned in use of back-up operation. (Please do not use the system with back-up operation for long time.)
- The operating compressor life time becomes shorter.
- The operating performance may drop due to the limited active compressor(s).
- The compressor may stop frequently by protection controlling.

*In order to keep the operating capacity, the release of the Low noise mode setting might be necessary.

Troubleshooting 56 E97. 9 **OUTDOOR UNIT Error Method:** **Outdoor Unit Fan Motor Driver Abnormal**	**Indicate or Display:** **Outdoor Unit : E. 9 7. 9** **Indoor Unit : Operation LED 9 times Flash, Timer LED 15 Times Flash, Filter LED Continuous Flash.** **Error Code : 9 U / 9 7**

Detective Actuators:	**Detective details:**
Driver PCB Fan motor Main PCB	When Driver PCB detects the following abnormalities, the error signal is output. ▪ Driver PCB defective ▪ Fan motor defective (Layer short) ▪ Main PCB defective (DC output abnormal) ▪ Lose connection or disconnecting wire

Forecast of Cause : 1. Driver PCB defective 2. Fan motor defective 3. Main PCB defective 4. Lose connection or disconnecting wire

Check Point 1 : Check the wiring connection

- ☐ Check Fan motor to Driver PCB wiring connector disconnection, open
- ☐ Check blown fuse of DC FAN motor (5A FUSE)
- ☐ Check Driver PCB to Capacitor wiring connector disconnection, open
- ☐ Check Main PCB to Driver PCB wiring connector disconnection, open

↓ **OK**

Check Point 2 : Check DC input power of Driver PCB

- ☐ Check the DC voltage of CN705 is within 15V± 10%. Refer to the service parts info 5
  >> If it is abnormal, replace Main PCB.
  (When Main PCB is replaced, set up the original setting by Rotary, Dip, and Push SW)

↓ **OK**

Check Point 3 : Replace Driver PCB

- ☐ Check the appearance and condition of mounting of Driver PCB.
- ☐ Change Driver PCB and release the error.
  Check if the error reoccurs on a test run.

↓ **OK**

Check Point 4 : Replace Fan motor

- ☐ Check the winding resistance of Fan motor.
- ☐ Change Fan motor and check if the error reoccurs on a test run.

After fixing the problem and for canceling the Error, Error Reset (F3-40) will be required after power reset

Caution
By changing of DIP SW 4-2 to ON, the Back-up operation can start when the active outdoor unit exists on the multi outdoor unit connection.
(Stand alone outdoor unit is impossible)
The following conditions will be concerned in use of back-up operation. (Please do not use the system with back-up operation for long time.)
- The operating compressor life time becomes shorter.
- The operating performance may drop due to the limited active compressor(s).
- The compressor may stop frequently by protection controlling.

*In order to keep the operating capacity, the release of the Low noise mode setting might be necessary.

Troubleshooting 57 E9A.1 **OUTDOOR UNIT Error Method:** Coil 1 (EEV) Error	**Indicate or Display:** Outdoor Unit : E. 9 A. 1 Indoor Unit : Operation LED 9 times Flash, Timer LED 15 Times Flash, Filter LED Continuous Flash. Error Code : 9 U / 9 A

Detective Actuators:	**Detective details:**
Main PCB	Coil 1(Expansion valve 1) driver circuit open detected.

Forecast of Cause :
1. EEV1 coil loose connection
2. EEV1 wires cut or pinched.
3. Defective EEV1 coil
4. Main PCB (DC12V) output abnormal

Check Point 1 : Check the connection of EEV connector

- ☐ Check if the connector CN116 is loose connection or not.

↓ OK

Check Point 2 : Check the EEV wire

- ☐ Check if the wire of EEV1 has damage or not. (Slash, Braking of wire, Pinching, etc.)

→ NG → Replace EEV1 Coil

↓ OK

Check Point 3 : Check the EEV Coil

- ☐ Check if the circuit of EEV1 coil winding is good or not. (Refer to the service parts information 14.)

→ NG → Replace EEV1 Coil

↓ OK

Check Point 4 : Check the output of EEV on the Main PCB

- ☐ Check if the DC12V is on between the Pin No.1 of CN116 and Pin No.2 of CN136 (GND). (Disconnect the wire of EEV1 when you check the output of EEV1)

↓ NG → Replace Main PCB

↓ OK

Check Point 5 : Noise, momentary open, voltage drop

- ☐ Check if temporary voltage drop was not generated.
- ☐ Check if momentary open was not generated.
- ☐ Check if ground is connection correctly or there are no related cables near the power line.

Trouble shooting 58 E9A.2 **OUTDOOR UNIT Error Method:** Coil 2 (EEV) Error	**Indicate or Display:** Outdoor Unit : E. 9 A. 2 Indoor Unit : Operation LED 9 times Flash, Timer LED 15 Times Flash, Filter LED Continuous Flash. Error Code : 9 U / 9A

Detective Actuators:	**Detective details:**
Main PCB	Coil 2(Expansion valve 2) driver circuit open detected.

Forecast of Cause :
1. EEV2 coil loose connection
2. EEV2 wires cut or pinched.
3. Defective EEV2 coil
4. Main PCB (DC12V) output abnormal

Check Point 1 : Check the connection of EEV connector

- ☐ Check if the connector CN117 is loose connection or not.

↓ **OK**

Check Point 2 : Check the EEV wire

- ☐ Check if the wire of EEV2 has damage or not. (Slash, Braking of wire, Pinching, etc.)

→ **NG** → Replace EEV2 Coil

↓ **OK**

Check Point 3 : Check the EEV Coil

- ☐ Check if the circuit of EEV2 coil winding is good or not. (Refer to the service parts information 15.)

→ **NG** → Replace EEV2 Coil

↓ **OK**

Check Point 4 : Check the output of EEV on the Main PCB

- ☐ Check if the DC12V is on between the Pin No.1 of CN117 and Pin No.2 of CN136 (GND). (Disconnect the wire of EEV2 when you check the output of EEV2)

↓ **NG** → Replace Main PCB

↓ **OK**

Check Point 5 : Noise, momentary open, voltage drop

- ☐ Check if temporary voltage drop was not generated.
- ☐ Check if momentary open was not generated.
- ☐ Check if ground is connection correctly or there are no related cables near the power line.

Troubleshooting 59 E9A.3 **OUTDOOR UNIT Error Method:** Coil 3 (EEV) Error	**Indicate or Display:** Outdoor Unit : E. 9 A. 3 Indoor Unit : Operation LED 9 times Flash, Timer LED 15 Times Flash, Filter LED Continuous Flash. Error Code : 9 U / 9 A

Detective Actuators:	**Detective details:**
Main PCB	Coil 3(Expansion valve 3) driver circuit open detected.

Forecast of Cause :
1. EEV3 coil loose connection
2. EEV3 wires cut or pinched.
3. Defective EEV3 coil
4. Main PCB (DC12V) output abnormal

Check Point 1 : Check the connection of EEV connector

- ☐ Check if the connector CN160 is loose connection or not.

↓ **OK**

Check Point 2 : Check the EEV wire

- ☐ Check if the wire of EEV3 has damage or not. (Slash, Braking of wire, Pinching, etc.)

→ **NG** → Replace EEV3 Coil

↓ **OK**

Check Point 3 : Check the EEV Coil

- ☐ Check if the circuit of EEV3 coil winding is good or not. (Refer to the service parts information 16.)

→ **NG** → Replace EEV3 Coil

↓ **OK**

Check Point 4 : Check the output of EEV on the Main PCB

- ☐ Check if the DC12V is on between the Pin No.1 of CN160 and Pin No.2 of CN136 (GND). (Disconnect the wire of EEV3 when you check the output of EEV3)

↓ **NG** → Replace Main PCB

↓ **OK**

Check Point 5 : Noise, momentary open, voltage drop

- ☐ Check if temporary voltage drop was not generated.
- ☐ Check if momentary open was not generated.
- ☐ Check if ground is connection correctly or there are no related cables near the power line.

Troubleshooting 60 E9U.2 **OUTDOOR UNIT Error Method:** **Slave Outdoor Unit Error**	**Indicate or Display:** **Outdoor Unit : E. 9 U. 2 (Only for master outdoor unit)** **Indoor Unit : No display / Operation LED 9 times Flash, Timer LED 15 timse Flash Filter LED Continuous Flash** **Error Code : ***

* Master Outdoor unit : 9 U. 2 /
Slave Outdoor unit and Service Tool indicate applicable Error code

Detective Actuators:	**Detective details:**
Slave Unit	▪ Error signal rece ived from slave unit of same refrigerant system

Check Point 1 : Check the slave unit
☐ Slave unit 7 seg display check ⇒ Check by troubleshooting based on displayed error code.

Troubleshooting 61 EA1. 1 OUTDOOR UNIT Error Method: Discharge Tempreture 1 Abnormal	Indicate or Display: Outdoor Unit : E. A 1. 1 Indoor Unit : Operation LED 9 times Flash, Timer LED 15 Times Flash, Filter LED Continuous Flash. Error Code : 9 U / A 1

Detective Actuators:	Detective details:
Discharge temp. sensor 1	▪ "Protection stop by "discharge temp. 1 ≧115°C during compressor 1 operation"" generated 2 times within 40 minutes.

Forecast of Cause :

1. 3-way valve not opened
2. EEV defective, strainer clogged
3. Outdoor unit operation defective, foreign matter on heat exchanger
4. Discharge temp. sensor 1 defective
5. Insufficient refrigerant

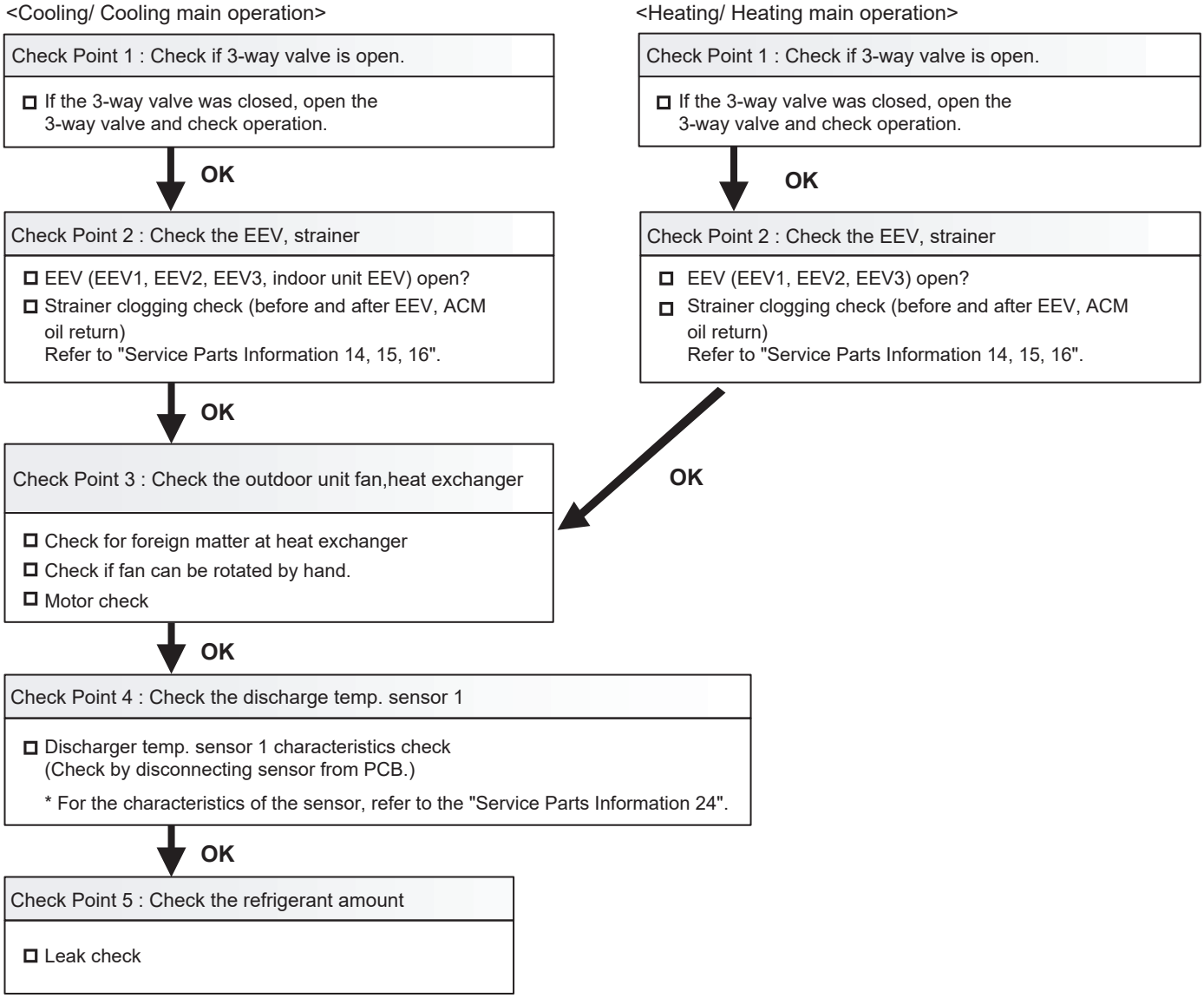

After fixing the problem and for canceling the Error, Error Reset (F3-40) will be required after power reset

Caution
By changing of DIP SW 4-2 to ON, the Back-up operation can start when the active outdoor unit exists on the multi outdoor unit connection. (Stand alone outdoor unit is impossible)
The following conditions will be concerned in use of back-up operation. (Please do not use the system with back-up operation for long time.)
- The operating compressor life time becomes shorter.
- The operating performance may drop due to the limited active compressor(s).
- The compressor may stop frequently by protection controlling.
*In order to keep the operating capacity, the release of the Low noise mode setting might be necessary.

Troubleshooting 62 EA3. 1 OUTDOOR UNIT Error Method: Compressor 1 Temperature Abnormal	Indicate or Display: Outdoor Unit : E. A 3. 1 Indoor Unit : Operation LED 9 times Flash, Timer LED 15 Times Flash, Filter LED Continuous Flash. Error Code : 9 U / A 3

Detective Actuators:	Detective details:
Compressor temp. sensor 1	▪ "Protection stop by "compressor 1 temp. ≧ 115°C during compressor 1 operation"" generated 2 times within 40 minutes.

Forecast of Cause :

1. 3-way valve not opened
2. EEV defective, strainer clogged
3. Outdoor unit operation defective, foreign matter on heat exchanger
4. Compressor 1 temp. sensor defective
5. Insufficient refrigerant

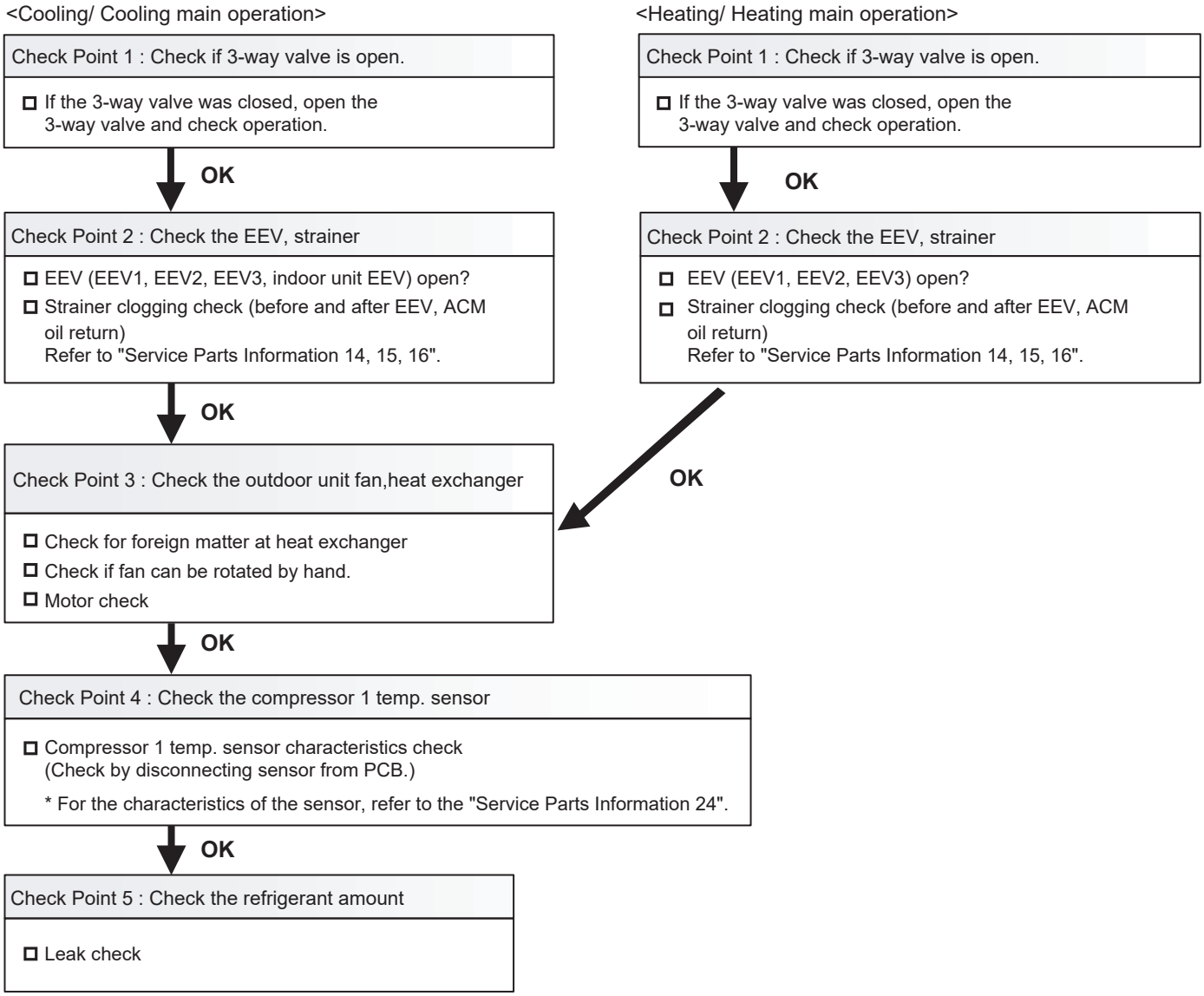

After fixing the problem and for canceling the Error, Error Reset (F3-40) will be required after power reset

Caution
By changing of DIP SW 4-2 to ON, the Back-up operation can start when the active outdoor unit exists on the multi outdoor unit connection. (Stand alone outdoor unit is impossible)
The following conditions will be concerned in use of back-up operation. (Please do not use the system with back-up operation for long time.)
- The operating compressor life time becomes shorter.
- The operating performance may drop due to the limited active compressor(s).
- The compressor may stop frequently by protection controlling.
*In order to keep the operating capacity, the release of the Low noise mode setting might be necessary.

Troubleshooting 63 EA4. 1 OUTDOOR UNIT Error Method: High Pressure Abnormal	Indicate or Display: Outdoor Unit : E. A 4. 1 Indoor Unit : Operation LED 9 times Flash, Timer LED 15 Times Flash, Filter LED Continuous Flash. Error Code : 9 U / A 4

Detective Actuators:	Detective details:
Judgment from value sensed by discharge pressure sensor	▪ "Protection stop by "discharge pressure ≧ 4.00MPa during operation of any compressor"" generated 3 times within 60 minutes

Forecast of Cause :

1. 3-way valve not opened
2. Outdoor unit fan operation defective, foreign matter at heat exchanger, excessive ambient temperature rise
3. EEV defective, strainer clogged
4. Solenoid valve defective
5. 4-way valve (including a coil) defective
6. Discharge pressure sensor defective
7. Refrigerant overcharged

<Cooling/ Cooling main operation>

Check Point 1 : Check if 3-way valve is open.

- ☐ If the 3-way valve was closed, open the 3-way valve and check operation.

↓ OK

Check Point 2 : Check the outdoor unit fan operation, heat exchanger, ambient temperature

- ☐ No foreign matter in air passage?
- ☐ Heat exchange fins clogged
- ☐ Outdoor unit fan motor check
- ☐ Ambient temperature not raised by effect of other heat sources?
- ☐ Discharged air not sucked in?

↓ OK

Check Point 3 : Check the EEV, strainer

- ☐ EEV (EEV1, EEV2) open?
- ☐ Strainer clogging check (before and after EEV, ACM, oil return) Refer to "Service Parts Information 14, 15".

↓ OK

Check Point 4 : Check the 4-way valve (4WV1, 4WV2)

- ☐ 4-way valve operation check. Refer to "Service Parts Information 18".

↓ OK

Check Point 5 : Check the solenoid valve (SV1, SV2, SV4)

- ☐ Solenoid valve operation check. Refer to "Service Parts Information 17".

↓ OK

Check Point 6 :Check the discharge pressure sensor

- ☐ Discharge pressure sensor characteristics check
  * For the characteristics of the discharge pressure sensor, refer to "Service Parts Information 22".

↓ OK

Check Point 7 : Check the refrigerant amount

- ☐ Refrigerant charged amount check

<Heating/ Heating main operation>

Check Point 1 : Check if 3-way valve is open.

- ☐ If the 3-way valve was closed, open the 3-way valve and check operation.

↓ OK

Check Point 4 : Check the EEV, strainer (indoor unit)

- ☐ EEV operation check
- ☐ Check of strainers before and after EEV Refer to "Service Parts Information 13".

OK → Check Point 5

Caution

By changing of DIP SW 4-2 to ON, the Back-up operation can start when the active outdoor unit exists on the multi outdoor unit connection. (Stand alone outdoor unit is impossible)

The following conditions will be concerned in use of back-up operation. (Please do not use the system with back-up operation for long time.)

- The operating compressor life time becomes shorter.
- The operating performance may drop due to the limited active compressor(s).
- The compressor may stop frequently by protection controlling.

*In order to keep the operating capacity, the release of the Low noise mode setting might be necessary.

Troubleshooting 64 EA4. 2 OUTDOOR UNIT Error Method: High Pressure Protection 1	Indicate or Display: Outdoor Unit : E. A 4. 2 Indoor Unit : Operation LED 9 times Flash, Timer LED 15 Times Flash, Filter LED Continuous Flash. Error Code : 9U / A 4

Detective Actuators:	Detective details:
High pressure switch 1	▪ "Protection stop by "high pressure switch 1 operated during compressor 1 operation"" generated 3 times within 60 minutes

Forecast of Cause :

1. 3-way valve not opened
2. Outdoor unit fan operation defective, foreign matter at heat exchanger, excessive ambient temperature rise
3. Check valve clogge
4. EEV defective, strainer clogged
5. Solenoid valve defective
6. 4-way valve (including a coil) defective
7. High pressure switch 1 defective
8. Refrigerant overcharged

<Cooling/ Cooling main operation>

Check Point 1 : Check if 3-way valve is open.

- ☐ If the 3-way valve was closed, open the 3-way valve and check operation.

↓ OK

Check Point 2 : Check the outdoor unit fan operation, heat exchanger, ambient temperature

- ☐ No foreign matter in air passage?
- ☐ Heat exchange fins clogged
- ☐ Outdoor unit fan motor check
- ☐ Ambient temperature not raised by effect of other heat sources?
- ☐ Discharged air not sucked in?

↓ OK

Check Point 3 : Check the EEV, strainer

- ☐ EEV (EEV1, EEV2) open?
- ☐ Strainer clogging check (before and after EEV, ACM, oil return) Refer to "Service Parts Information 14, 15".

↓ OK

Check Point 4 : Check the 4-way valve (4WV1, 4WV2)

- ☐ 4-way valve operation check. Refer to "Service Parts Information 18".

↓ OK

Check Point 5 : Check the check valve

- ☐ Check if check valve (oilseparetor (out) of compressor 1) is not clogged.

↓ OK

Check Point 6 : Check the solenoid valve (SV1, SV2, SV4)

- ☐ Solenoid valve operation check. Refer to "Service Parts Information 17".

↓ OK

Check Point 7 : Check high pressure switch 1

- ☐ High pressure switch 1 characteristics check.
  * For the characteristics of the high pressure switch 1, refer to "Service Parts Information 23".

↓ OK

Check Point 8 : Check the refrigerant amount

- ☐ Refrigerant charged amount check

<Heating/ Heating main operation>

Check Point 1 : Check if 3-way valve is open.

- ☐ If the 3-way valve was closed, open the 3-way valve and check operation.

↓ OK

Check Point 4 : Check the EEV, strainer (indoor unit)

- ☐ EEV operation check
- ☐ Check of strainers before and after EEV Refer to "Service Parts Information 13".

OK → Check Point 5

Caution

By changing of DIP SW 4-2 to ON, the Back-up operation can start when the active outdoor unit exists on the multi outdoor unit connection.
(Stand alone outdoor unit is impossible)
The following conditions will be concerned in use of back-up operation. (Please do not use the system with back-up operation for long time.)
- The operating compressor life time becomes shorter.
- The operating performance may drop due to the limited active compressor(s).
- The compressor may stop frequently by protection controlling.

*In order to keep the operating capacity, the release of the Low noise mode setting might be necessary.

Troubleshooting 65 EA5. 1 OUTDOOR UNIT Error Method: Low Pressure Abnormal	Indicate or Display: Outdoor Unit : E. A 5. 1 Indoor Unit : Operation LED 9 times Flash, Timer LED 15 Times Flash, Filter LED Continuous Flash. Error Code : 9 U / A 6

Detective Actuators:	Detective details:
Suction pressure sensor	▪ "Protection stop by "suction pressure ≦ 0.10MPa continued for 10 minutes" or "suction pressure ≦ 0.05MPa" during operation of any compressor"" was generated 5 times within 3 hours

Forecast of Cause :
1. 3-way valve not opened
2. Outdoor unit ambient temperature too low
3. Outdoor unit fan operation defective, foreign matter at heat exchanger
4. EEV defective, strainer clogged
5. Solenoid valve defective
6. 4-way valve defective
7. Low pressure sensor characteristics defective
8. Insufficient refrigerant

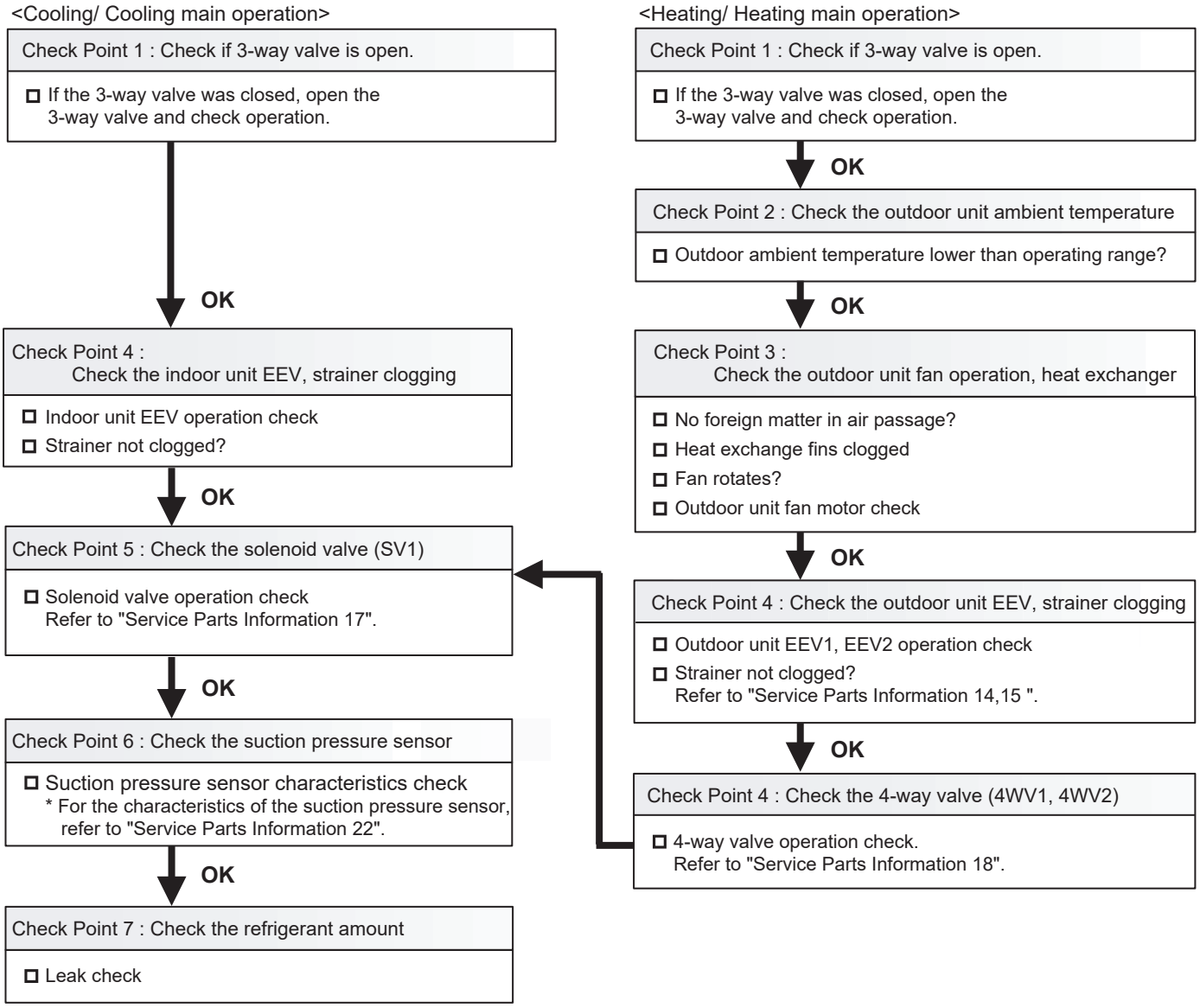

After fixing the problem and for canceling the Error, Error Reset (F3-40) will be required after power reset

Troubleshooting 66 EA6. 3 **OUTDOOR UNIT Error Method:** **Heat Ex.1 gas temp. Error**	**Indicate or Display:** **Outdoor Unit : E. A 6. 3** **Indoor Unit : Operation LED 9 times Flash, Timer LED 15 Times Flash, Filter LED Continuous Flash.** **Error Code : 9 U / A 6**

Detective Actuators:	**Detective details:**
Heat Ex.1 gas temp. sensor (TH7)	▪ Heat Ex.1 gas temp. sensor (TH7) for use as condenser (4way valve1:Off, EEV1:Open) is detected abnormally-low to High pressure saturated temp. for 4 minutes or more.

Forecast of Cause :

1. Heat Ex.1 gas temp. sensor (TH7) not installed correct position.
2. Heat Ex.1 gas temp. sensor (TH7) defective
3. 4-way valve1 (including a coil) defective
4. EEV1 (including a coil) defective
5. Main PCB defective

Check Point 1 : Check the condition of Heat Ex.1 gas temp. sensor (TH7)

☐ Check the condition of mounting of Heat Ex.1 gas temp. sensor (TH7).

↓ **OK**

Check Point 2 : Check the Heat Ex.1 gas temp. sensor (TH7)

☐ Check characteristics check. (Disconnect the Heat Ex.1 gas temp. sensor from PCB and check.)
* For the sensor characteristics, refer to the "Service Parts Information 24".

↓ **OK**

Check Point 3 : Check the condition of 4-way valve1 coil

☐ Check the condition of mounting of 4-way valve1 coil and 4-way valve2 coil.

↓ **OK**

Check Point 4 : Check the EEV

☐ Check the condition of mounting of EEV1 coil.
☐ Check the connector connection state of EEV1, EEV2, EEV3 coil.

↓ **OK**

Check Point 5 : Replace Main PCB

☐ Check the appearance and condition of mounting of Main PCB.
>> If it is abnormal, replace Main PCB.
(When Main PCB is replaced, set up the original setting by Rotary, Dip, and Push SW.)

↓ **OK**

Check Point 6 : Replace 4-way valve1

☐ 1. Fully close the 3-way valve, and the refrigerant is recovered.2. 4-way valve1 is replaced.
3. Perform vacuuming of repaired outdoor unit thoroughly , and add the refrigerant with the recovered amount.
4. Check if the error reoccurs on a test run.

After fixing the problem and for canceling the Error, Error Reset (F3-40) will be required after power reset

Caution
By changing of DIP SW 4-2 to ON, the Back-up operation can start when the active outdoor unit exists on the multi outdoor unit connection. (Stand alone outdoor unit is impossible)
The following conditions will be concerned in use of back-up operation. (Please do not use the system with back-up operation for long time.)
- The operating compressor life time becomes shorter.
- The operating performance may drop due to the limited active compressor(s).
- The compressor may stop frequently by protection controlling.
*In order to keep the operating capacity, the release of the Low noise mode setting might be necessary.

Troubleshooting 67 EA6. 4 **OUTDOOR UNIT Error Method:** Heat Ex.2 gas temp. Error	**Indicate or Display:** Outdoor Unit : E. A 6. 4 Indoor Unit : Operation LED 9 times Flash, Timer LED 15 Times Flash, Filter LED Continuous Flash. Error Code : 9 U / A 6

Detective Actuators:	**Detective details:**
Heat Ex.2 gas temp. sensor (TH8)	▪ Heat Ex.2 gas temp. sensor (TH8) for use as condenser (4way valve2:Off, EEV2:Open) is detected abnormally-low to High pressure saturated temp. for 4 minutes or more.

Forecast of Cause :

1. Heat Ex.2 gas temp. sensor (TH8) not installed correct position
2. Heat Ex.2 gas temp. sensor (TH8) defective
3. 4-way valve2 (including a coil) defective
4. EEV2 (including a coil) defective
5. Main PCB defective

Check Point 1 : Check the condition of Heat Ex.2 gas temp. sensor (TH8)

☐ Check the condition of mounting of Heat Ex.2 gas temp. sensor (TH8).

↓ **OK**

Check Point 2 : Check the Heat Ex.2 gas temp. sensor (TH8)

☐ Check characteristics check. (Disconnect the Heat Ex.2 gas temp. sensor from PCB and check.)
* For the sensor characteristics, refer to the "Service Parts Information 24".

↓ **OK**

Check Point 3 : Check the condition of 4-way valve2 coil

☐ Check the condition of mounting of 4-way valve1 coil and 4-way valve2 coil.

↓ **OK**

Check Point 4 : Check the EEV2

☐ Check the condition of mounting of EEV2 coil.
☐ Check the connector connection state of EEV1, EEV2, EEV3 coil.

↓ **OK**

Check Point 5 : Replace Main PCB

☐ Check the appearance and condition of mounting of Main PCB.
>> If it is abnormal, replace Main PCB.
(When Main PCB is replaced, set up the original setting by Rotary, Dip, and Push SW.)

↓ **OK**

Check Point 6 : Replace 4-way valve2

☐ 1. Fully close the 3-way valve, and the refrigerant is recovered.2. 4-way valve2 is replaced.
3. Perform vacuuming of repaired outdoor unit thoroughly , and add the refrigerant with the recovered amount.
4. Check if the error reoccurs on a test run.

After fixing the problem and for canceling the Error, Error Reset (F3-40) will be required after power reset

Caution
By changing of DIP SW 4-2 to ON, the Back-up operation can start when the active outdoor unit exists on the multi outdoor unit connection. (Stand alone outdoor unit is impossible)
The following conditions will be concerned in use of back-up operation. (Please do not use the system with back-up operation for long time.)
- The operating compressor life time becomes shorter.
- The operating performance may drop due to the limited active compressor(s).
- The compressor may stop frequently by protection controlling.

*In order to keep the operating capacity, the release of the Low noise mode setting might be necessary.

Troubleshooting 68 EAC. 4 OUTDOOR UNIT Error Method: Outdoor unit Heat Sink Tempreture Abnormal	Indicate or Display: Outdoor Unit : E. A C. 4 Indoor Unit : Operation LED 9 times Flash, Timer LED 15 Times Flash, Filter LED Continuous Flash. Error Code : 9 U / A C

Detective Actuators:	Detective details:
Heat sink temp. sensor	▪ "Protection stop by heat sink temp. ≧ 91°C" occurred 3 times within 60 minutes.

Forecast of Cause :

1. Foreign matter on heat sink, heat sink dirty
2. Foreign matter on heat exchanger, excessive ambient temperature rise
3. Heat sink temp. sensor defective

Check Point 1 : Check the heat sink state

- ☐ Heat sink foreign matter, soiling check

↓ **OK**

Check Point 2 : Check the foreign matter and ambient temperature of heat exchanger

- ☐ Heat exchange foreign matter check
- ☐ Ambient temperature not raised by effect of other heat sources?
- ☐ Discharged air not sucked in?

↓ **OK**

Check Point 3 : Check the heat sink temp. sensor

- ☐ Heat sink temp. sensor characteristics check
  (Check by disconnecting sensor from PCB.)
  * For the characteristics of the thermistor, refer to "Service Parts Information 24".

Caution

By changing of DIP SW 4-2 to ON, the Back-up operation can start when the active outdoor unit exists on the multi outdoor unit connection. (Stand alone outdoor unit is impossible)

The following conditions will be concerned in use of back-up operation. (Please do not use the system with back-up operation for long time.)

- The operating compressor life time becomes shorter.
- The operating performance may drop due to the limited active compressor(s).
- The compressor may stop frequently by protection controlling.

*In order to keep the operating capacity, the release of the Low noise mode setting might be necessary.

Troubleshooting 69 EJ1. 1 RB UNIT Error Method: RB Unit EEPROM Access Abnormal	Indicate or Display: Outdoor Unit : E. 5 U.1 Indoor Unit : Operation LED 14 times Flash, Timer LED 1 Times Flash, Filter LED Continuous Flash. Error Code : J 1 RB Unit : Power LED ON, Error LED Continuous Flash

Detective Actuators:	Detective details:
RB Unit Controller PCB	When the EEPROM Lead Test faild 3 times at the testing process

Forecast of Cause : 1. Outside cause 2. Defective connection of electric component 3. Controller PCB defectve

Check Point 1 : Reset Power Supply

- ☐ Does Error LED indication show again?

NO →

Check Point 1-2 :
Check outside cause (Voltage drop or noise, etc.)

- Instant drop ----- Check if there is a large load electric apparatus in the same circuit.
- Momentary power failure ----- Check if there is a defective contact or leak current in the power supply circuit.
- Noise ----- Check if there is any equipment causing harmonic wave near electric line (Neon bulb or electric equipment that may cause harmonic wave). Check the complete insulation of grounding.

↓

Check Point 2 : Check RB Unit components

- ☐ Check all connectors (Lose connection or incorrect wiring)
- ☐ Check any shortage or corrision on PCB.

↓

Check Point 3 : Replace Controller PCB

- ☐ Change Controller PCB and Set up the original setting

Troubleshooting 70 EJ1. 4 RB UNIT Error Method: RB Unit transmission PCB2 parallel communication Error	Indicate or Display: Outdoor Unit : E. 1 4.1 / 1 4.2* Indoor Unit : 1st: Operation LED 13 times Flash, Timer LED 1 Times Flash, Filter LED Continuous Flash. 2nd:Operation LED 1 time Flash, Timer LED 4 Times Flash Error Code : J 1 / 1 4 RB Unit : Power LED ON, Error LED Continuous Flash

*** Outdoor unit indicates 1 4.1 or 1 4.2 (No communication from Indoor unit) Service tool indicates Error 1 4.3 or J 1.1, when the service tool detects No communication of outdoor unit or the communication Error of RB unit.**

Detective Actuators:	Detective details:
RB Unit Controller PCB Circuit RB Unit Communication PCB	When Parallel Communication Error (Communication reset occurs continuously more than specified times) is detected.

Forecast of Cause : 1. Connection failure 2. Outside cause 3. Communication PCB failure 4. Controller PCB defectve

Check Point 1 : Reset Power Supply

- ☐ Does Error LED indication show again?

NO → **Check Point 1-2 : Check outside cause (Voltage drop or noise, etc.)**

- Instant drop ----- Check if there is a large load electric apparatus in the same circuit.
- Momentary power failure ----- Check if there is a defective contact or leak current in the power supply circuit.
- Noise ----- Check if there is any equipment causing harmonic wave near electric line (Neon bulb or electric equipment that may cause harmonic wave). Check the complete insulation of grounding.

↓

Check Point 2 : Check RB Unit components

- ☐ Check if RB Unit Communication PCB is removed.

↓

Check Point 3 : Replace Communication PCB

- ☐ Replace Communication PCB.

Troubleshooting 71 **OUTDOOR UNIT Error Method:** Initial Setting Error	**Indicate or Display:** Outdoor Unit : - - - - Indoor Unit : No Display Error Code : No Display * Service tool does not indicate the Error code

Detective Actuators:	**Detective details:**
Outdoor unit main PCB	▪ When no communication data can be received from the Inverter PCB at the time of power ON. (In this case, "Inverters communication error" also occurs.) ▪ When no communication data can be received from the Transmission PCB at the time of power ON. (In this case, "Outdoor unit transmission PCB parallel communication error" also occurs.) **Master unit**: When the power is turned on, the number of connected slave units set at the master unit and the number of slave units received by communication do not match. **Slave unit**: When the power is turned on, not even one master unit communication data can be received.

Forecast of Cause :
1. Power supply defective
2. Outdoor unit address/number of connected slave units setting mistake
3. The number setting mistake of outdoor unit
4. Connection of communication line between outdoor units defective
5. Noise 6.Main PCB defective 7. Inverter PCB defective 8. Transmission PCB defective

Check Point 1-1 : Turn the power on again

Error displayed again?

NO → **Check Point 1-2 : Noise**

☐ Check if ground is connection correctly or there are no related cables near the power line.

YES ↓

Check Point 2 : Check error display

"Inverters communication error" or "Outdoor unit transmission PCB parallel communication error" also occur?

YES → In case of "Inverters communication error", Refer to the Trouble shooting No. 31,32. In case of "Outdoor unit transmission PCB parallel communication error", Refer to the Trouble shooting No.34.

NO ↓

Check Point 3 : Chech the outdoor unit address/ number of connected slave units setting.

☐ Setting check of outdoor unit address of each outdoor unit

☐ Check the number setting of slave unit

OK ↓

Check Point 4 : Check the number setting of outdoor units

☐ Check the number setting of outdoor units

OK ↓

Check Point 5 : Check the connection of communication line between outdoor units

Drop the power and perform the check.

☐ Connection and open check of communication lines between outdoor units

OK ↓

Check Point 6 : Replace Main PCB

☐ Change Main PCB and set up the original address.

4-2-10 TROUBLE SHOOTING NO ERROR CODE

Trouble shooting 72

Indoor Unit - No Power (Except wall mounted type)

Forecast of Cause :

1. Power Supply failure 2. Outside cause 3. Electrical Component defective

Check Point 1 : Power supply

☐ Is not the breaker down?
- Instant drop ----- Check if there is a large load electric apparatus in the same circuit.
- Momentary power failure ----- Check if there is a defective contact or leak current in the power supply circuit.
- Noise ----- Check if there is any equipment causing harmonic wave near electric line (Neon bulb or electric equipment that may cause harmonic wave).
  Check the complete insulation of grounding.

OK ↓

Check Point 2 : Fuse of Indoor unit

☐ Is not open circuit ?
If the fuse was open state, check the cause of short circuit on the AC circuit before replacing the spare parts.

OK →

NG (Short circuit on AC circuit) ↓

Check Point 3 : Short circuit check on AC circuit

Check on short circuit state step by step
1. Disconnect AC input wire on the terminal board.
2. Disconnect Drain pump AC input connector
3. Disconnect FAN motor AC input connector

NG (Short circuit on AC circuit) ↓

Replace power supply PCB

Check Point 4 : Ckeck the cement Resistor

☐ Check the cement resistor (current limiting resistor) on the power supply PCB Open / Short circuit check

NG (Open circuit of cement resistor) → Replace power supply PCB

OK (Not Open) 3.3 Ohm ± 5% ↓

Check Point 5 : Short circuit check on DC supply circuit

Disconnect the DC power connector on the power supply PCB board and check short circuit step by step.
1. Check short circuit between the pin No. 1 and the pin No.6
2. Check short circuit between the pin No. 2 and the pin No.6

NG (Short circuit) → Replace power supply PCB

OK (Open circuit) ↓

Check Point 6 : Short circuit check on DC13.5V circuit

Disconnect the DC power connector on the main PCB board and check for short circuit between the pin No. 1 and the pin No.6 step by step.
1. Disconnect EEV connector
2. Disconnect SP motor
3. Disconnect Wired Remote Controller
4. Disconnect Transmission PCB

NG (Short circuit) → ReplaceMain PCB

OK (Open circuit) ↓

Check Point 7 : Short circuit check on DC5.0V circuit

Disconnect the DC power connector on the main PCB board and check for short circuit between the pin No. 2 and the pin No.6 step by step.
1. Disconnect Indicatopr PCB
2. Disconnect SW PCB
3. Disconnect Transmission PCB

NG (Short circuit) → ReplaceMain PCB

Trouble shooting 73

Indoor Unit - No Power (Wall mounted type)

Forecast of Cause :

1. Power Supply failure 2. Outside cause 3. Electrical Component defective

Check Point 1 : Power supply

- ☐ Is not the breaker down?
- ● Instant drop ----- Check if there is a large load electric apparatus in the same circuit.
- ● Momentary power failure ----- Check if there is a defective contact or leak current in the power supply circuit.
- ● Noise ----- Check if there is any equipment causing harmonic wave near electric line (Neon bulb or electric equipment that may cause harmonic wave).
  Check the complete insulation of grounding.

OK

Check Point 2 : Fuse or Thermal fuse of Indoor unit

- ☐ Is not open circuit ?
  If the fuse was open state, check the cause of short circuit on the AC circuit before replacing the spare parts.

NG (Short circuit on AC circuit)

Check Point 3 : Short circuit check on AC circuit

- ☐ Disconnect AC power input wires and check short circuit

NG (Short circuit on AC circuit)

OK

Check Point 4 : Power supply circut of FAN Motor

- ☐ Disconnect FAN motor and Check short circuit

NG (Short circuit)

Check Point 5 : Check the cement Resistor

- ☐ Check the cement resistor (current limiting resistor) on the power supply PCB Open / Short circuit check

NG (Open circuit of cement resistor)

OK (Not Open) 2.2 Ohm ± 5%

Check Point 6 : Short circuit check on DC13.5V circuit

Check for shorts between pins 1 and 6 of the 13.5V DC circuit connector.

1. Disconnect EEV connector
2. Disconnect SP motor
3. Disconnect Wired Remote Controller
4. Disconnect Transmission PCB

NG (Short circuit)

ReplaceMain PCB

OK (Open circuit)

Check Point 7 : Short circuit check on DC5.0V circuit

Check for a short circuit between the pins of DC5V circuit.

1. Disconnect Indicator PCB
2. Disconnect SW PCB
3. Disconnect Transmission PCB

NG (Short circuit)

Trouble shooting 74

Outdoor Unit - No Power

Forecast of Cause :

1. Power Supply failure 2. Outside cause 3. Electrical Components defective

Check Point 1 : Check Installation Condition

- ☐ Isnt the breaker down?
- ☐ Check loose or removed connection cable.

>>If abnormal condition is found, correct it by referring to Installation Manual or Design ta & Technical Manual.

OK

Check Point 2 : Check Outside Cause such as Voltage drop or Noise

- Instant drop ----- Check if there is a large load electric apparatus in the same circuit.
- Momentary power failure ----- Check if there is a defective contact or leak current in the power supply circuit.
- Noise ----- Check if there is any equipment causing harmonic wave near electric line (Neon bulb or electric equipment that may cause harmonic wave).
  Check the complete insulation of grounding.

OK

Check Point 3 : Check Electrical Components

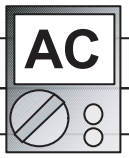

☐ Check the voltage of power supply.
>> Check if AC230V appears at Outdoor Unit Terminal L1-L2, L2-L3, L3-L1.

NO → Check Point 1

OK

☐ Check the fuse on the Filter PCB(Main).

OK → Check short circuit on EEV's internal circuit

NG

☐ Replace the fuse.
☐ Recheck if the power supply terminals section is shorted.
(Note) Always check in the power off state.

OK → Check short circuit on EEV's internal circuit

NG

☐ Disconnect connecting cable of the Filter PCB(Main) and Main PCB and recheck. if the power supply terminals section is not shorted.
(Note) Always check in the power off state.

OK

☐ Disconnect the connector for the AC power input devices and check short circuit on power input cable one by one.
- Solenoid valve, 4 way valve, Heater, Mg-Relay -

NG

☐ Replace the defective device

OK

☐ Check short circuit on EEV's internal circuit
Disconnect EEV from Main PCB, and check the short circuit of EEV internal circuit.
Check Short circuit (0 Ohm) between pin No.1 and other pin No..

NG

☐ Replace the defective device

OK

☐ Check DC (5.0V) circuit on CN118
Check DC voltage 5.0 V between pin No.1 and pin No.3

NG (No DC5.0V)

☐ Replace Main PCB

OK

☐ Check Pressure Sensor open / short after remove Transmission PCB from the Main PCB

OK (No Short Circuit 0 Ohm)

NG (Open Circuit)

☐ Replace the Pressure sensor

Single type
UTP-RX01AH
UTP-RX01BH
UTP-RX01CH

Multi type
UTP-RX04BH

Trouble shooting 75

RB Unit - No Power

Forecast of Cause :

1. Power Supply failure 2. Outside cause 3. Electrical Component defective

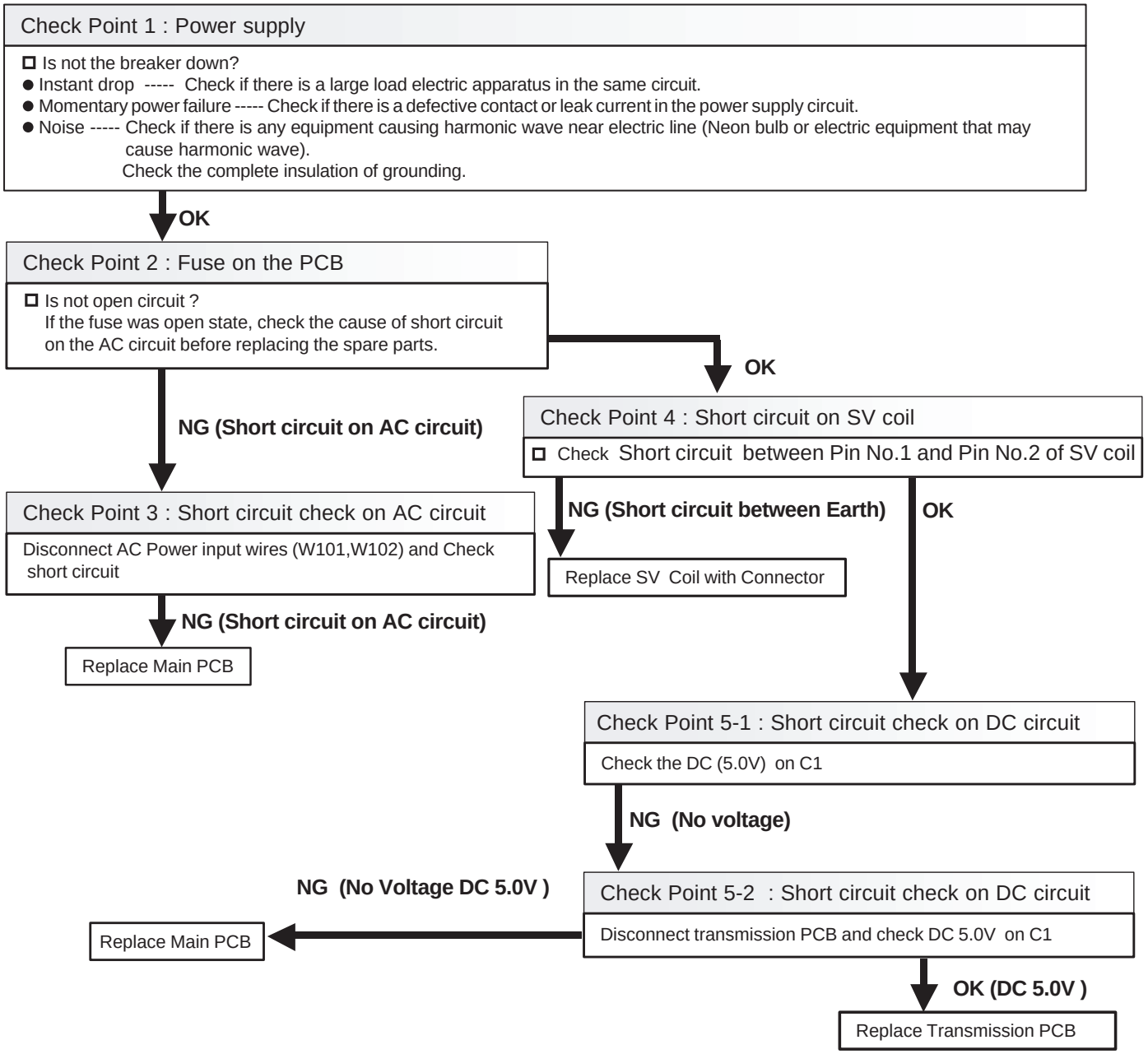

Multi type
UTP-RX08AH
UTP-RX12AH

Trouble shooting 75

RB Unit - No Power

Forecast of Cause :

1. Power Supply failure 2. Outside cause 3. Electrical Component defective

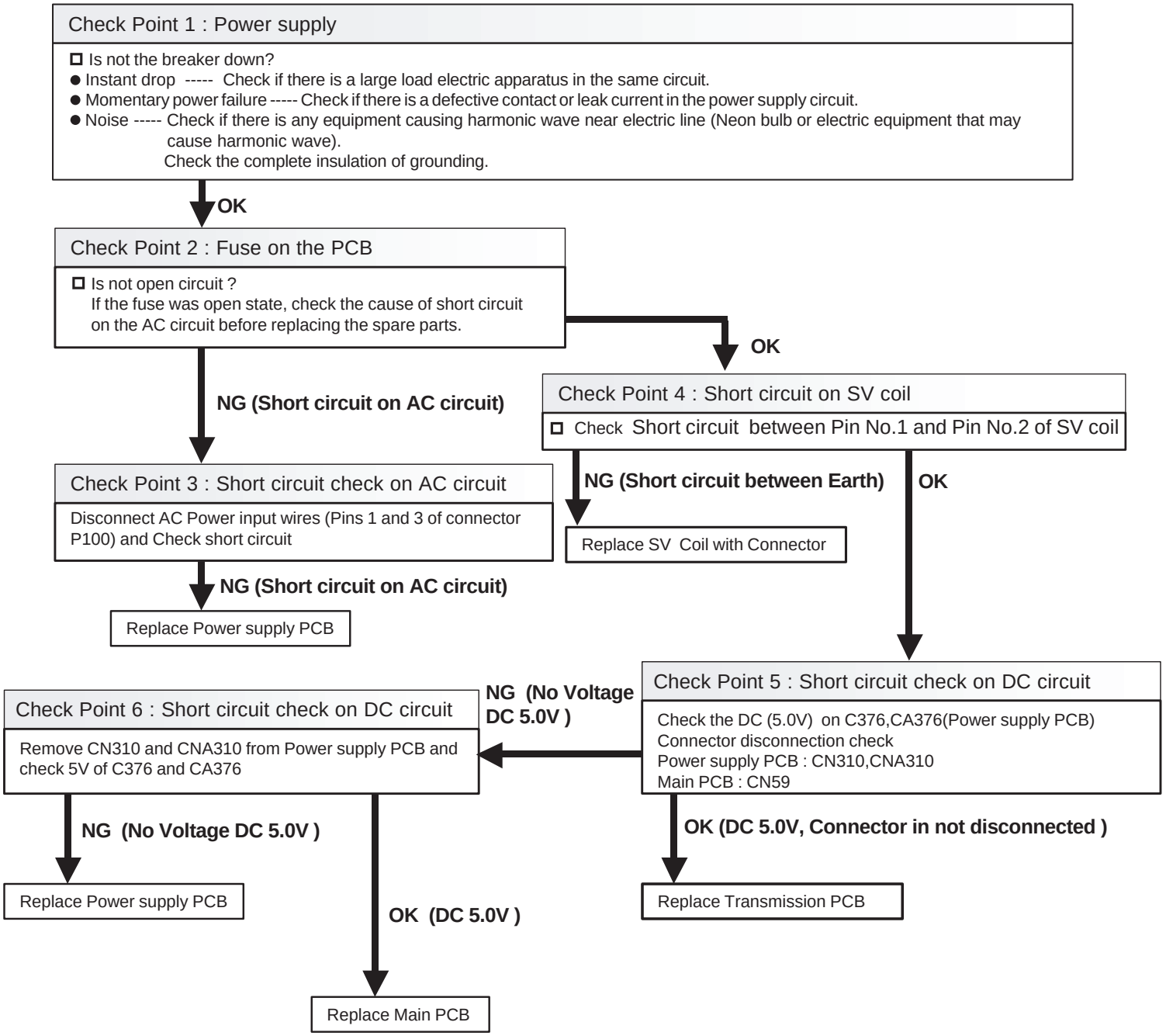

Trouble shooting 76

No Operation (Power is ON)

Forecast of Cause :
1. Setting/Connection failure 2. Outside cause
3. Electrical Component defective

Check Point 1 : Check indoor, RB Unit and outdoor installation condition

- ☐ Indoor Unit - Check incorrect wiring between Indoor Unit– Remote Control, or terminals between Indoor Units. Or, check if there is an open cable connection.
- ☐ Check address setting (Are all the address of Indoor unit, Outdoor unit and RB unit correct?)
- ☐ Are these Indoor Unit, RB Unit, Outdoor Unit, and Remote Control suitable model numbers to connect?

>> If there is some abnormal condition, correct it by referring to Installation manual and Design & Technical Manual.

OK

Turn off Power and check/correct followings.
- ☐ Isn't Communication PCB of Indoor Unit removed?
- ☐ Is there loose or removed communication line of Indoor Unit and Outdoor Unit?
- ☐ Check Terminator (DIP-SW SET 5) is installed on Outdoor Main PCB.
- ☐ Check loose or removed communication line between each Outdoor Unit.
- ☐ Check loose Communication PCB of each Outdoor Unit.
- ☐ Check network cable connection between Indoor unit - Outdoor unit - RB Unit.
- ☐ Check loose Communication PCB of each controller PCB inside RB Unit.

OK

Check Point 2 : Check outside cause at Indoor unit, RB Unit, and Outdoor unit (Voltage drop or Noise)

- Instant drop -----Check if there is a large load electric apparatus in the same circuit.
- Momentary power failure ----- Check if there is a defective contact or leak current in the power supply circuit.
- Noise ----- Check if there is any equipment causing harmonic wave near electric line (Neon bulb or electric equipment that may cause harmonic wave).
  Check the complete insulation of grounding.

OK

Check Point 3 : Check Electrical Components at Indoor unit, Outdoor unit and RB Unit

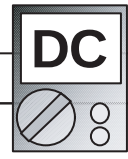

☐ Indoor Unit - Check the voltage between pins 1-3 of the connector (on the control PCB) for connection with the remote controller. In case of 2 wires WRC, Check the voltage between pins 1-2.

>> If it is DC12V, Remote Control is defective (Controller PCB is normal) >> Replace Remote Control
>> If it is DC 0V, Controller PCB is defective (Check Remote Control once again) >> Replace Controller PCB

☐ If some of Indoor unit does not operate, replace the Communication PCB of the non-operative Indoor Unit.
>> If the symptom does not change, replace Controller PCB of Indoor Unit.
>> If the symptom does not change, replace Transmission PCB of RB Unit.
>> If the symptom does not change, replace Controller PCB of RB Unit.

☐ If all of Indoor Units do not operate, check the connection between Main PCB and Communication PCB of Outdoor Unit (Main Unit).
>> If the symptom does not change, replace Communication PCB of Outdoor Unit (Main Unit).
(If it did not work, replace Main PCB.)

Trouble shooting 77

No Cooling / No Heating

Forecast of Cause :
1. Indoor Unit error 2. Outdoor Unit error 3. Effect by Surrounding environment
4. Connection Pipe / Connection Wire failure 5. Refrigeration cycle failure

Check Point 1 : Check Indoor Unit

- ☐ Does Indoor Unit FAN run on HIGH FAN?
- ☐ Is Air Filter dirty?
- ☐ Is Heat Exchanger clogged?

OK

Check Point 2 : Check Outdoor Unit Operation

- ☐ Check if Outdoor Unit is operating
- ☐ Check any objects that obstruct the air flow route.
- ☐ Check clogged Heat Exchanger.
- ☐ Is the pipe length setting (Push Switch "MODE/EXIT", "SELECT", "ENTER") suitable?
- ☐ Is the Valve open?

OK

Check Point 3 : Check Site Condition

- ☐ Is capacity of Indoor Unit fitted to Room size?
- ☐ Any windows open? Or direct sunlight ?

OK

Check Point 4 : RB Unit installation Condition

- ☐ Check Error LED on RB Unit controller PCB
  ==> Wrong wire connection of Network cable
  (Network cable for O.U. was installed on the terminal for I.U.)
- ☐ Check wire connection between I.U. and applical terminal of RB unit.
  ==> Cross over connection, Lose connection
- ☐ Check Solenoid valve wrong connection on the PCB
  ==> Check the color of connector on the controller PCB
- ☐ Check Solenoid valve defective
  ==> AC Power input and check the operation
- ☐ Check pipe connection
  ==> Pipe Diameter, pipe length
- ☐ Check the branch pipe connection position and DIP switch setting.
  ==> When connecting 2 or 4 ports together.
  (Refer to P.01-05 for settings.)

>> If there is an abnormal condition, correct it by refering to RB Unit Trouble shooting

OK

Check Point 5 : Check Indoor/Outdoor Installation Condition

- ☐ Check connection pipe (specified pipe length & Pipe diameter?)
- ☐ Check any loose or removed communication line.

>> If there is an abnormal condition, correct it by referring to Installation Manual or Design & Technical Manual.

OK

Check Point 6 : Check Refrigeration Cycle

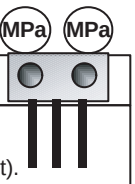

- ☐ Check if Strainer is clogged (Refer to the figure at right).
- ☐ Measure Gas Pressure and if there is a leakage, correct it.

>> When recharging the refrigerant, make sure to perform vacuuming, and recharge the specified amount.

- ▶ Check EEV (Refer to the Service Parts Information)
- ▶ Check Solenoid Valve (Refer to the See Service Parts Information)
- ▶ Check Compressor (Refer to theSee Service Parts Information)
- ▶ Check 4 way valve (Refer to theSee Service Parts Information)

Attention!!
Strainer normally does not have temperature difference between inlet and outlet as shown in (1), but if there is a difference like shown in (2), there is a possibility of inside clogged. In this case, replace Strainer.

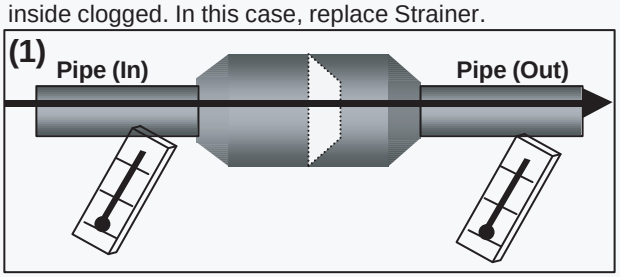

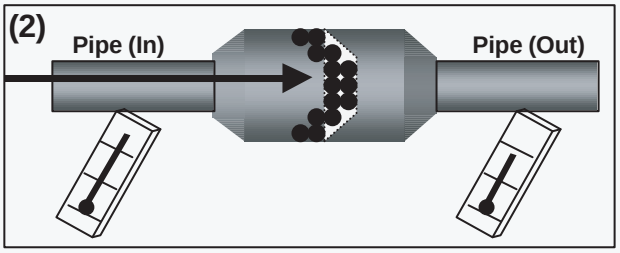

Trouble shooting 78

Abnormal Noise

Forecast of Cause :
1. Abnormal installation (Indoor/Outdoor / RB Unit) 2. Fan failure(Indoor /Outdoor)
3. EEV failure (Indoor) 4. Compressor failure (Outdoor)

Diagnosis method when Abnormal Noise is occurred

Abnormal noise is coming from Indoor Unit
(Check and correct followings)

- ☐ Is Main Unit installed in stable condition?
- ☐ Is the installation of Air suction grille and front panel normal?
- ☐ In case of Duct type : Is Static Pressure range normal? (Refer to Data & Technical Manual)

OK

- ☐ Is Fan broken or deformed?
- ☐ Is the screw of Fan loose?
- ☐ Is there any object which obstruct the Fan rotation?

Attention!!
If Refrigerant Noise is occurring, Check if the Indoor and Outdoor Thermistor is wrongly installed. Check and correct the thermistor.

Abnormal noise is coming from Outdoor Unit
(Check and correct followings)

- ☐ Is Main Unit installed in stable condition?
- ☐ Is Bell Mouth installed normally?

OK

- ☐ Is Fan broken or deformed?
- ☐ Is the screw of Fan loose?
- ☐ Is there any object which obstruct the Fan rotation?

OK

- ☐ Check if vibration noise by loose bolt or contact noise of piping is happening.

OK

- ☐ Is Compressor locked?
  >> Check Compressor (Service Parts Information 2,3)

Diagnosis method when Abnormal Noise is occurred

Abnormal noise is coming from RB Unit
(Check and correct followings)

- ☐ Is Main Unit installed in stable condition?
- ☐ Is the limitation of connectable number of indoor unit and connectable total capacity of indoor unit correct?
- ☐ Is Pipe connection correct?
  (Wrong pipe connection - Gas pipe, Suction pipe, Liquid pipe - Check pipe size, Crosover connection between pipe and Network cable)
- ☐ Check the branch pipe connection position and DIP switch setting.
  ==> When connecting 2 or 4 ports together.
  (Refer to P.01-05 for settings.)

OK

- ☐ Are solenoid valve connectors correct position ?
  (Check the color of connectors)
- ☐ Are solenoid valves operation correct ?
  (Check the coil of SV's, Open / Short, Click sound at ON state)

Trouble shooting 79

Water Leaking

Forecast of Cause :

1. Erroneous installation 2. Drain hose failure 3. Float Switch failure

Diagnosis method when water leak occurs

- ☐ Is Main Unit installed in stable condition?
- ☐ Is Main Unit broken or deformed at the time of transportation or maintenance?

OK

- ☐ Is Drain Hose connection loose?
- ☐ Is there a trap in Drain Hose?
- ☐ Is Drain Hose clogged?

OK

- ☐ Is Fan rotating?

>> Check Fan Motor (Service Parts Information 19,20)

OK

- ☐ Is Float Switch defective?

>> Check Float Switch (Refer to Trouble Shooting)

Diagnosis method when water is spitting out

- ☐ Is the filter clogged?

OK

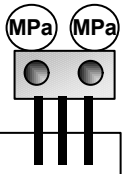

- ☐ Check Gas Pressure and correct it if there was a gas leak.

Attention!!

If water is leaking from the Indoor Unit that is not in operation, there is a possibility of Indoor EEV is not closed.

=> Check EEV (Service Parts Information)

Trouble shooting 80

Outdoor air unit - No Power

Forecast of Cause :

1. Power Supply failure 2. Outside cause 3. Electrical Component defective

Check Point 1 : Power supply

- ☐ Is not the breaker down?
- ● Instant drop ----- Check if there is a large load electric apparatus in the same circuit.
- ● Momentary power failure ----- Check if there is a defective contact or leak current in the power supply circuit.
- ● Noise ----- Check if there is any equipment causing harmonic wave near electric line (Neon bulb or electric equipment that may cause harmonic wave).
  Check the complete insulation of grounding.

OK

Check Point 2 : Check Protector (20A)

- ☐ Check protector open / short
  If the protector is open circuit, replace it.

OK (No short circuit)

Check Point 3 : Check AC line

- ☐ Check AC line (L-N) open / short

NG (Short circuit)

Check Point 4 : Check short circuit Filter PCB

- ☐ Disconnect the wire between Filter PCB and reactor, check short circuit of AC line.
  If there is short circuit, replace the Filter PCB.

OK (No short circuit)

Check Point 5 : Check short circuit Diode bridge

- ☐ Connect the disconnected wire(s) on the check point 4, disconnect the wire between Diode bridge and Capacitor, check short circuit of AC line.
  If there is short circuit, replace the Diode bridge.

OK (No short circuit)

Check Point 6 : Check short circuit Capacitor

- ☐ Connect the disconnected wire(s) on the check point 5, disconnect the wire between Capacitor and Filter PCB, check short circuit of AC line.
  If there is short circuit, replace the Capacitor.

OK (No short circuit)

Check Point 7 : Check short circuit Power supply PCB

- ☐ Connect the disconnected wire(s) on the check point 6, disconnect the wire of Fan motor, check short circuit of AC line.
  If there is short circuit, replace the Power supply PCB.

OK (No short circuit)

Check Point 8 : Check Fan Motor

- ☐ Check open / short of FAN motor
  Refer to the Service Parts Information 21
  If there is short circuit, replace FAN motor.

OK (No short circuit)

Check Point 9 : Short circuit check on DC circuit

Disconnect the connector (CN200) on the Power supply PCB and check the short circuit

1. DC12V line (CN200 Pin 1- 5)
2. DC 5V Line (CN200 Pin 1 - 3)
3. DC 15V-1 Line (CN500 Pin 3 - 4)
4. DC 15V-2 Line (CN530 Pin 3 - 4)

If one of them is short circuit, replace the Power supply PCB

OK (No short circuit)

Check Point 10 : Check short circuit of actuators (for DC12V)

- ☐ Disconnect the CN10 (EEV1) on the Main PCB, and check short circuit on Main PCB CN 4 Pin 1 - 5.
  If the short circuit disappears, replace the EEV coil.
- ☐ Disconnect the CNC01 (WRC) on the Main PCB, and check short circuit on Main PCB CN 4 Pin 1 - 5.
  If the short circuit disappears, check the WRC wire, WRC.
- ☐ Disconnect the CNB01 (Ext.Out) on the Main PCB, and check short circuit on Main PCB CN 4 Pin 1 - 5.
  If the short circuit disappears, check the Ext. device or wiring.
- ☐ Disconnect the CN2 (TransmissionPCB) on the Main PCB, and check short circuit on Main PCB CN 4 Pin 1 - 5.
  If the short circuit disappears, replace the Transmission PCB.
- ☐ Disconnect the CN22 (Interconnecting wire) on the Main PCB, and check short circuit on Main PCB CN 4 Pin 1 - 5.
  If the short circuit disappears, replace the Filter PCB.
- ☐ If the short circuit appears after disconnecing actuators, replace the Main PCB.

OK (No short circuit)

Check Point 11 : Check short circuit of actuators (for DC5V)

- ☐ Disconnect the CN14 (SW PCB) on the Main PCB, and check short circuit on Main PCB CN 4 Pin 1 - 3.
  If the short circuit disappears, replace the SW PCB.
- ☐ Disconnect the CN18 (Receiver unit *Option) on the Main PCB, and check short circuit on Main PCB CN 4 Pin 1 - 3.
  If the short circuit disappears, check the wire, Receiver unit.
- ☐ Disconnect the CN2 (Transmission PCB) on the Main PCB, and check short circuit on Main PCB CN 4 Pin 1 - 3.
  If the short circuit disappears, replace the Transmission PCB.
- ☐ Disconnect the CN21 (Interconnecting wire) on the Main PCB, and check short circuit on Main PCB CN 4 Pin 1 - 3.
  If the short circuit disappears, replace the Power supply PCB.
- ☐ If the short circuit appears after disconnecing actuators, replace the Main PCB.

Trouble shooting 81 E39. 1 (E39. 2) **INDOOR UNIT Error Method:** **Indoor Unit power supply error for FAN motor 1 (2)**	**Indicate or Display:** **Outdoor Unit : E.5 U.1** **Error Code : 3 9**
Detective Actuators: Indoor Unit Controller PCB Circuit Indoor Unit Power supply PCB Circuit	**Detective details:** When the DC power input for Fan motor < W500 - W501 (W530 - W531) on the Power supply PCB > becomes lower voltage than the specified voltage.

Forecast of Cause : 1. Noise momentary open, voltage drop 2. Wire connection 3. Fan motor 4. Peripheral electric devices 5. Power supply PCB 6. Controller PCB

Check Point 1 : Check if any outside cause such as voltage drop or noise

- Instant voltage drop ----- Check if there is any electric equipment with a large load within the same circuit.
- Momentary power failure ----- Check contact failure or leak current in power supply circuit
- Check if there is any equipment that causes harmonic wave near the power cable (Neon light bulb or any electronic equipment which causes harmonic wave). And check the complete insulation of grounding.

>>If the same symptom does not reappear after resetting the power, possibility of noise is high.

OK

Check Point 2 : Check wire connection

- ☐ Wire lose connection / damage between the CN21 on the Controller PCB and CN250 on the Power supply PCB. In case of Model 72, between W530 (W531) on the Power supply PCB and Capacitor.

>>If there is abnormal on the wire, replace it

OK

Check Point 3 : Check rotation of Fan / wire resistance

- ☐ Rotate the applicable fan by hand when operation is off.
- ☐ Disconnect the connector from the Power supply PCB and Check resistance value of Motor connector. (Refer to the service parts information 20)

OK

Check Point 4 : Check peripheral devices, Posistor, Capacitor, Diode bridge

- ☐ Check resistance value, short circuit, visible damage

>>If there is abnormal , replace it

OK

Check Point 5 : Replace Power supply PCB

- ☐ Change Power supply PCB

NG

Check Point 6 : Replace Controller PCB

- ☐ Change Controller PCB and set up the original address.

Trouble shooting 82 **INDOOR UNIT Error Method:** E 4A.1 **Indoor unit suction air temp. thermistor error**	**Indicate or Display:** **Outdoor Unit : E.5 U.1** **Error Code : 4 A**

Detective Actuators:	**Detective details:**
Indoor Unit Controller PCB Circuit Suction air temp. thermistor	When Indoor unit suction air temp. thermistor open or shortage is detected

Forecast of Cause : 1. Connector defective connection 2. Thermistor defective 3. Controller PCB defective

Check Point 1 : Check connection of Connector

- ☐ Check if connector is loose or removed
- ☐ Check erroneous connection
- ☐ Check if thermistor cable is open

>>Reset Power when reinstalling due to removed connector or incorrect wiring.

OK

Check Point 2 : Remove connector and check sensor resistance value

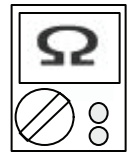

Sensor Characteristics (Rough value)

Temperature (°C)	0	5	10	15	20	25	30	35
Resistance Value (kΩ)	33.6	25.2	20.1	15.8	12.5	10.0	8.0	6.5

Temperature (°C)	40	45	50
Resistance Value (kΩ)	5.3	4.3	3.5

▶ **If Thermistor is either open or shorted, replace it and reset the power.**

OK

Check Point 3 : Check voltage CN9 of Controller PCB (DC5.0V)

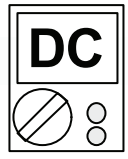

▶ **If the voltage does not appear, replace Controller PCB and set up the original address.**

Trouble shooting 83 **INDOOR UNIT Error Method:** E 4A.2 **Indoor unit discharge air temp. thermistor error**	**Indicate or Display:** **Outdoor Unit : E.5 U.1** **Error Code : 4 A**
Detective Actuators: Indoor Unit Controller PCB Circuit Discharge air temp. thermistor	**Detective details:** When Indoor unit discharge air temp. thermistor open or shortage is detected

Forecast of Cause : 1. Connector defective connection 2. thermistor defective 3. Controller PCB defective

Check Point 1 : Check connection of Connector

- ☐ Check if connector is loose or removed
- ☐ Check erroneous connection
- ☐ Check if thermistor cable is open

>>Reset Power when reinstalling due to removed connector or incorrect wiring.

OK

Check Point 2 : Remove connector and check sensor resistance value

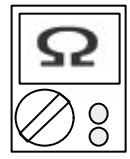

Sensor Characteristics (Rough value)

Temperature (°C)	0	5	10	15	20	25	30	35
Resistance Value (kΩ)	33.6	25.2	20.1	15.8	12.5	10.0	8.0	6.5

Temperature (°C)	40	45	50
Resistance Value (kΩ)	5.3	4.3	3.5

▶ **If Thermistor is either open or shorted, replace it and reset the power.**

OK

Check Point 3 : Check voltage CN9 of Controller PCB (DC5.0V)

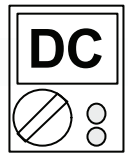

▶ **If the voltage does not appear, replace Controller PCB and set up the original address.**

Trouble shooting 84 E59. 2 **INDOOR UNIT Error Method:** **Indoor Unit Fan Motor 2 rotation speed Error**	**Indicate or Display:** **Outdoor Unit : E.5 U.1** **Error Code : 5 9**
Detective Actuators: Indoor Unit Controller PCB Circuit Indoor Fan Motor 2	**Detective details:** When the FAN motor feed back rotation value which is detecting on the controller PCB becomes 0 and lasts for more than 1 minute at motor opera tion condition. Or, when the feed back rotation value contimues at 1/ 3 of target value for more than 1 minute.

Forecast of Cause : 1. Fan rotation failure 2. Fan motor winding open 3. Motor protection by ambient temp. increase 4. Capacitor failure 5. Controller PCB failure

Check Point 1 : Check rotation of Fan

- ☐ Rotate the fan by hand when operation is off.
  (Check if fan is caught, dropped off or locked motor)
  >>If Fan or Bearing is abnormal, replace it.

OK

Check Point 2 : Check Motor winding / Internal PCB circuit

- ☐ Check Indoor Fan motor **(Refer to the PARTS INFORMATION 20)**
  >>If Fan motor is abnormal, replace it.

OK

Check Point 3 : Check ambient temp. around motor

- ☐ Check excessively high temperature around the motor.
  (If there is any surrounding equipment that causes heat)
  >>Upon the temperature coming down, restart operation..

OK

Check Point 4 : Check Motor Capacitor

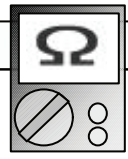

- ☐ Check continuity of motor capacitor
  >>If it is shorted, replace the capacitor.

OK

Check Point 5 : Replace Controller PCB

- ☐ Change Controller PCB and set up the original address.

Trouble shooting 85 E52. 2 **INDOOR UNIT Error Method:** Coil 2 (Expansion valve) Error	**Indicate or Display:** Outdoor Unit : E.5U.1 Indoor Unit : Operation LED 5 times Flash, Timer LED 2 Times Flash, Filter LED Continuous Flash. Error Code : 5 2

Detective Actuators:	**Detective details:**
Indoor unit controller PCB	When the EEV2 drive circuit is open circuit

Forecast of Cause :
1. Wrong capacity setting
2. EEV2 coil lose connection
3. EEV2 wire(s) cut or pinched
4. Defective EEV2 coil
5. Controller PCB (DC 12V) output abnormal
6. Noise momentary open, voltage drop

Check Point 1 : Check if the capacity setting was wrong.

- ☐ Check if the capacity setting of transmission PCB was not selected as 40kW or 50kW by using of one EEV unit. <Refer to the installation manual>

↓ **OK**

Check Point 2 : Check the connection of EEV2 connector

- ☐ Check If the connector CN 11 is lose connection wrong wiring or not

↓ **OK**

Check Point 3 : Check the EEV2 wire

- ☐ Check if the wire of EEV 2 has damege or not (Slash, Braking of wire, Pinching, etc.)

→ **NG** → Replace EEV2 unit

↓ **OK**

Check Point 4 : Check the EEV2 Coil

- ☐ Check if the circuit of EEV coil winding is good or not (Refer to the service parts Information 13)

→ **NG** → Replace EEV2 unit

↓ **OK**

Check Point 5 : Check the output of EEV2 on the Main PCB

- ☐ Check if the DC 12 is on between the pin No. 1 of CN11 and Pin No.6 of CNB01 (GND) (Disconnect the wire of EEV2 when you check the output of EEV2)

→ **NG** → Replace Main PCB

↓ **OK**

Check Point 6 : Noise, momentary open, voltage drop

- ☐ Check if temporary voltage drop was not generated.
- ☐ Check if momentary open was not generated.
- ☐ Check if ground is connection correctly or there are no related cables near the power line.

Trouble shooting 86 E J6.1 **INDOOR UNIT Error Method:** Peripheral device Error	**Indicate or Display:** Outdoor Unit : E.5U.1 Indoor Unit : Operation LED 13 times Flash, Timer LED 6 Times Flash, Filter LED Continuous Flash. Error Code : J 6

Detective Actuators:	**Detective details:**
Peripheral device Error	When the DX-KIT control unit recived the Error input from Peripheral device Error

Forecast of Cause :

1. Error input connecting wire (When the External input Error input in use.) damage
2. Peripheral device Error

Check point 1: Check the wire connection of External input (Error input)
☐ Check wire btween the terminal “Error input signal” of DX-KIT and the peripheral device, if it is not short circuit. If the connecting wire has the shorcircuit, replace the wire.

Check point 2: Check the Error status of peripheral device
☐ Refer to the Maintenance manual for the peripheral device.

* The type of error cannot be checked at the DX-KIT control unit.

Trouble shooting 87	**Forecast of Cause :**
Peripheral device doesn't operate	1. Power supply failuer 2. Trouble on peripheral device 3. DX-Kit Electrical compornent defective 4. Field setting mismatch

General check procedure

1. Check Error code on the VRF system. (Remote controller, Service tool, etc)
2. Check LED brinks on the controler PCB of DX-KIT
3. Check Error code on the peripheral device.
4. Check non of wrong filed settings or wrong installation.

Check Point 1 : Power supply

☐ Is not the breaker down?
Instant drop ----- Check if there is a large load electric apparatus in the same circuit.
Momentary power failure ----- Check if there is a defective contact or leak current in the power supply circuit.
Noise ----- Check if there is any equipment causing harmonic wave near electric line (Neon bulb or electric equipment that may cause harmonic wave).
Check the complete insulation of grounding.

OK ↓

Check Point 2: LED indication on the controller PCB → **LED Brinking** → Check Error code indication on the remote controller or Service tool

LED ON ↓

Check Point 3: Operation signal output
Check circuit on the terminal ON /OFF SIGNAL(OUTPUT) → **Short circuit** → Refer to the service manual for the peripheral device and check the trouble shooting tips.

Open circuit ↓

Check Point 4: Relay PCB power input DC12V
Check power input CN800 Pin1 - Pin2 → **OK (DC12V)** → Make sure that the operation command (ON signal) is transfering from the controller to the DX-Kit controller.
If the ON singal was OK, Replace the Relay PCB.

NG ↓

Make sure that the operation command (ON signal) is transfering from the Controller to the DX-Kit controller.
If the ON singal was OK, Replace the Main PCB.

Other tips

Check Field function setting, (External input signal setting)
The Prohibit setting condtions
The operating mode mismatch

Trouble shooting 88	**Forecast of Cause :**
Peripheral device FAN not operate	1. Power supply failuer 2. Trouble on peripheral device 3. DX-Kit Electrical compornent defective 4. Field setting mismatch

General check procedure

1. Check Error code on the VRF system. (Remote controller, Service tool, etc)
2. Check LED brinks on the controller PCB of DX-KIT
3. Check Error code on the peripheral device.
4. Check non of wrong filed settings or wrong installation.
5. Check if FAN operation stopped by the freeze prevention or the defrosting operation.

Check Point 1 : Power supply

☐ Is not the breaker down?
Instant drop ----- Check if there is a large load electric apparatus in the same circuit.
Momentary power failure ----- Check if there is a defective contact or leak current in the power supply circuit.
Noise ----- Check if there is any equipment causing harmonic wave near electric line (Neon bulb or electric equipment that may cause harmonic wave).
Check the complete insulation of grounding.

OK ↓

Check Point 2: LED indication on the controller PCB → **LED Brinking** → Check Error code indication on the remote controller or Service tool

LED ON ↓

Check Point 3: Operation signal output
Check circuit on the terminal ON /OFF SIGNAL (OUTPUT)

Open circuit ↓ / **Short circuit** ↓

Check Point 4: FAN SIGNAL output
Check circuit on the terminal FAN SIGNAL (OUTPUT)

Short circuit → Refer to the service manual for the prepheral device and check the trouble shooting tips.

Open circuit ↓

Check Point 4: Relay PCB pwer input DC12V
Check power input CN800 Pin1 - Pin2

OK (DC12V) → Make sure that the operation command (ON signal) is transfering from the controller to the DX-Kit controller.
If the ON singal was OK, Replace the Relay PCB.

NG ↓

Make sure that the operation command (ON signal) is transfering from the Controller to the DX-Kit controller.
If the ON singal was OK, Replace the Main PCB.

Other tips

Check Field function setting, (External input signal setting)
The Prohibit setting condtions
The operating mode mismatch

Trouble shooting 89	**Forecast of Cause :**
Peripheral device No Cooling/ Heating	1. Temperature controlling 2. EEV controlling 3. External Factor

General check procedure

1. Check Error code on the VRF system. (Remote controller, Service tool, etc)
2. Check LED brinks on the controler PCB of DX-KIT
3. Check Error code on the peripheral device.
4. Check none of protection function is operating on the system.
   Protection functions (For the description of protective conditions, see the service manual.)
   - Abnormal Temperature: Compressor temperature, Discharge temperature, Heat-sink temperature, IDU HEX temp.
   - Abnormal pressure: High pressure, Low pressure,
   - Abnormal on devices: EEV coil, FAN motor, Compressor Frq,

Check Point 1: Temperature sensors

Sensor position / Wire connection / Temperature detection

- Measure the resistance of sensor at the terminal board, and compare the temperature (transformed with resistance value) with the actual detecting temperature by using the Service tool.

Gas / Liquid Sensor Chracterristcs (Rough value)

Temperature (°C)	0	5	10	15	20	25	30	35	40	45	50
Resistance Value (kOhm)	33.6	25.2	20.1	15.8	12.5	10.0	8.0	6.5	5.3	4.3	3.5

Inlet / Outlet Air Sensor Chracterristcs (Rough value)

Temperature (°C)	0	5	10	15	20	25	30	35	40	45	50
Resistance Value (kOhm)	168.6	129.8	100.9	79.1	62.5	49.8	40.0	32.4	26.3	21.2	17.8

If the sensor position was incorrect, install the sensor to the correct position
If the temperature detection was wrong, replace the sensor.

Check Point 2: EEV

Wire connection / EEV movment

- Measure the resistance of EEV coil and measure the DC12V power input at the terminal board.
  EEV1: CN10_Pin No.1-Pin No.6, Pin No.1-Pin No.4, Pin No.2-Pin No.3, Pin No.2-Pin No.5)
  EEV2: CN11_Pin No.1-Pin No.6, Pin No.1-Pin No.4, Pin No.2-Pin No.3, Pin No.2-Pin No.5)
- Check EEV initialisation movment by the power reset of DX-Kit.
- Check refrigerant flowing by measuring the temperature of pipe inlet and pipe outlet.

Read wire	Resistance value (20°C)
White - Red	**200 ± 10%** Ω
Yellow - Brown	
Orange - Red	
Blue - Brown	

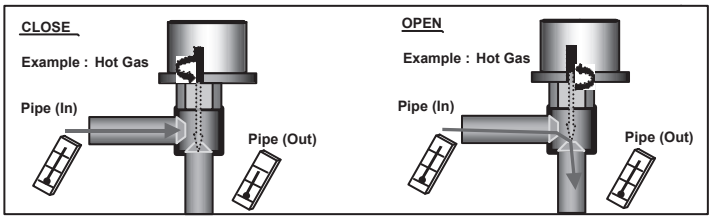

If the resistance of EEV coil was not correct, replace the EEV unit.
If the DC12V did not appear on the terminal, check DCV power supply on CN102.
No Voltage: Replace the power supply PCB, DC12V appeares: Replace the controller PCB.
If the EEV did not react after power reset, or no refrigerant flowing, replace the EEV unit.

Check Point 3: External factor

Air circulation obstruction
Design mismatch (Capacity, FAN speed mismatch, Field setting (Analog signal input) etc,)
Peripheral device abnormal (See the Serivce manual for the peripheral device)

Trouble shooting 90

DX-KIT Controller No Power
(LED on the Main PCB is OFF)

Forecast of Cause :

1. Power supply failuer
2. DX-Kit Electrical compornent defective

Check Point 1 : Power supply

☐ Is not the breaker down?
Instant drop ----- Check if there is a large load electric apparatus in the same circuit.
Momentary power failure ----- Check if there is a defective contact or leak current in the power supply circuit.
Noise ----- Check if there is any equipment causing harmonic wave near electric line (Neon bulb or electric equipment that may cause harmonic wave).
Check the complete insulation of grounding.

OK ↓

Check Point 2: FUSE F101 on the Power supply PCB → **OPEN** → Before replacing the burnt FUSE, make sure that the terminal between L-N -E are not short-circuit.

OK ↓

Check Point 2: Output voltage on the power supply PCB
Disconnect the CN 102 on the Power supply PCB.
Check voltage CN102 output voltage
Pin No.1 - Pin No.6: DC12V
Pin No.2 - Pin No.6: DC5V

→ **NG** → Replace the Power supply PCB

OK ↓

the condition of short-circuit, and

Check Point 2: Output voltage on the main PCB
Disconnect the CN 801, and the power input connectors for actuators (EEV, Sensor, Relay PCB.)
Check voltage CN801 output voltage
Pin No.1 - Pin No.2: DC12V

→ **NG** → Replace the Main PCB

OK ↓

Check Point 2: Output voltage on the main PCB
Disconnect the power input connectors for actuators (EEV, Sensor, Relay PCB.)
And check the short circuit of each actuators.

→ **NG** → Replace the actuators which has the Short-circuit conditions

Troubleshooting 91 **E57. 1** **INDOOR UNIT Error Method:** **E57. 2** **Damper(OPEN/CLOSE) Detection Limit Switch Error**	**Indicate or Display:** **Outdoor Unit : E. 5U. 1** **Indoor Unit : Operation LED 5 times Flash, Timer LED 7 Times Flash, Economy LED Continuous Flash.** **Error Code : 57**

Detective Actuators: Indoor unit Controller PCB Circuit Limit switch Damper	**Detective details:** When limit switch were not able to detect the close though the damper close. (Upper air flow) When limit switch were not able to detect the open though the damper open. (Upper & Lower air flow)

Forecast of Cause :

1. Limit switch failure
2. Shorted connector/ wire
3. Damper faulure
4. Controller PCB failure

Check Point 1 : Check Limit switch

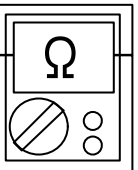

- Check operation of limit switch. (any blocking by dust, etc.)
- Remove Limit switch and check ON/OFF switching operation by using a meter.

>>If Limit switch is detective, replace it.

OK

Check Point 2 : Check Connector (CN51) / Wire

- Check loose contact of CN18 /shorted wire (pinched wire).

>>Replace Limit switch if the wire is abnormal

OK

Check Point 3 : Check Damper

- Check the obstruction of damper movement.
- Check the damper movement.

>>Replace Damper if the damper is abnormal

OK

Check Point 4 : Replace Controller PCB

▶ **If Check Point 1～3 do not improve the symptom, change Controller PCB.**

Troubleshooting 92 **E57. 3** **INDOOR UNIT Error Method:** **Damper(OPEN/CLOSE) Simultaneous Detection Limit Switch Error**	**Indicate or Display:** **Outdoor Unit : E. 5U. 1** **Indoor Unit : Operation LED 5 times Flash, Timer LED 7 Times Flash, Economy LED Continuous Flash.** **Error Code : 57**

Detective Actuators: Indoor unit Controller PCB Circuit Limit switch	**Detective details:** When the limit switch detects open and close at the simultaneous.

Forecast of Cause :

1. Limit switch failure 2. Shorted connector/ wire 3. Controller PCB failure

Check Point 1 : Check Limit switch

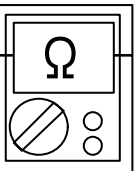

- Check operation of limit switch. (any blocking by dust, etc.)
- Remove Limit switch and check ON/OFF switching operation by using a meter.

>>If Limit switch is detective, replace it.

OK

Check Point 2 : Check Connector (CN51) / Wire

- Check loose contact of CN18 /shorted wire (pinched wire).

>>Replace Limit switch if the wire is abnormal

OK

Check Point 3 : Replace Controller PCB

▶ **If Check Point 1 & 2 do not improve the symptom, change Controller PCB.**

Troubleshooting 93-1 E22. 1 **OUTDOOR UNIT Error Method:** **Connecting indoor units capacity error** **Error at Indoor unit connection check**	**Indicate or Display:** **Outdoor Unit : E. 5 U. 1** **Operation LED 2 times Flash, Timer LED 2 Times Flash, Filter LED Continuous Flash.** **Error Code : 9 U / 2 2**

Detective Actuators:	**Detective details:**
Outdoor unit Main PCB	▪ When error occurs during Indoor unit connection check

Forecast of Cause :
1. Indoor unit power supply defective
2 Indoor unit over connected
3.Communication line incorrect connection
4. Wrong Indoor unit address setting
5. Noise, momentary open

Check Point 1 : Check the indoor unit power supply

☐ Check the indoor unit power supply

↓ **OK**

Check Point 2 : Check the connectable number of Indor unit / connectable total capacity against the outdoor unit

☐ Check the each limitations in the Design and Technical manual.

↓ **OK**

Check Point 3 : Check the communication line connection

Check if communication line is correctly connected
☐ Is it uncoupled or cut halfway ?
☐ Connecting terminal position is correct as the installation manual shows ?

↓ **OK**

Check Point 4 : Check indoor unit address setting

☐ Check if the same indoor unit address number are not existing in the same refrigerant address number.

↓ **OK**

Check Point 5 : Check noise, momentary open, voltage drop

☐ Check if power supply temporarily stops by outages or if strong noise is generated from surrounding environment during auto address

↓ **OK**

Retry Indoor unit connection check

Refer to P.04-106

Troubleshooting 93- 2 E24. 2 **OUTDOOR UNIT Error Method:** Connecting number of indoor unit error Error at indoor unit connection check	**Indicate or Display:** **Outdoor Unit : E. 5 U. 1** **Operation LED 2 times Flash, Timer LED 4 Times Flash,** **Filter LED Continuous Flash.** **Error Code : 9 U / 2 4**

Detective Actuators:	**Detective details:**
Outdoor unit Main PCB	▪ When error occurs during Indoor unit connection check

Forecast of Cause :
1. Indoor unit power supply defective
2 Indoor unit over connected
3.Communication line incorrect connection
4. Wrong Indoor unit address setting
5. Noise, momentary open

Check Point 1 : Check the indoor unit power supply

☐ Check the indoor unit power supply

↓ **OK**

Check Point 2 : Check the connectable number of Indor unit / connectable total capacity against the outdoor unit

☐ Check the each limitations in the Design and Technical manual.

↓ **OK**

Check Point 3 : Check the communication line connection

Check if communication line is correctly connected
☐ Is it uncoupled or cut halfway ?
☐ Connecting terminal position is correct as the installation manual shows ?

↓ **OK**

Check Point 4 : Check indoor unit address setting

☐ Check if the same indoor unit address number are not existing in the same refrigerant address number.

↓ **OK**

Check Point 5 : Check noise, momentary open, voltage drop

☐ Check if power supply temporarily stops by outages or if strong noise is generated from surrounding environment during auto address

↓ **OK**

Retry Indoor unit connection check

Refer to P.04-106

Troubleshooting 93- 3 E26. 1 **OUTDOOR UNIT Error Method:** Dual address number is existing. Error at indoor unit connection check.	**Indicate or Display:** **Outdoor Unit : E. 5 U. 1** **Operation LED 2 times Flash, Timer LED 6 Times Flash, Filter LED Continuous Flash.** **Error Code : 9 U / 2 6**

Detective Actuators:	**Detective details:**
Outdoor unit Main PCB	▪ When error occurs during Indoor unit connection check

Forecast of Cause :
1. Indoor unit power supply defective
2 Indoor unit over connected
3.Communication line incorrect connection
4. Wrong Indoor unit address setting
5. Noise, momentary open

Check Point 1 : Check the indoor unit power supply

☐ Check the indoor unit power supply

↓ **OK**

Check Point 2 : Check the connectable number of Indor unit / connectable total capacity against the outdoor unit

☐ Check the each limitations in the Design and Technical manual.

↓ **OK**

Check Point 3 : Check the communication line connection

Check if communication line is correctly connected
☐ Is it uncoupled or cut halfway ?
☐ Connecting terminal position is correct as the installation manual shows ?

↓ **OK**

Check Point 4 : Check indoor unit address setting

☐ Check if the same indoor unit address number are not existing in the same refrigerant address number.

↓ **OK**

Check Point 5 : Check noise, momentary open, voltage drop

☐ Check if power supply temporarily stops by outages or if strong noise is generated from surrounding environment during auto address

↓ **OK**

Retry Indoor unit connection check

Refer to P.04-106

Indoor unit connection check

● SWITCH POSITION

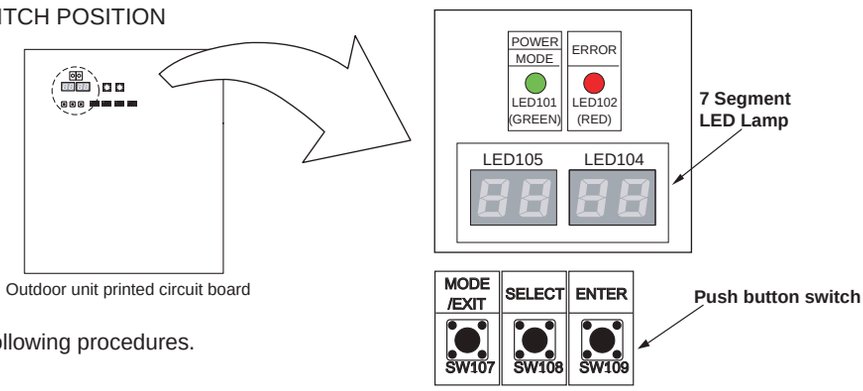

Please perform the indoor unit connection check according to following procedures.

- Turn on the power of indoor unit and outdoor unit.

LED105 LED104

MODE/EXIT

Set to Function mode [F3].

SELECT

SELECT

(When [F4] to [F9] are displayed, continue to press the "SELECT" button until [F3] is displayed.)

ENTER

SELECT

Press the "SELECT" button until "12" is displayed.

ENTER

- Press the "ENTER" button for more than 3 seconds.

When indoor unit connection check can not be performed

- This will be displayed when the Indoor unit connection check starts.

(*1)

- Confirm the number of connected indoor units and the volume ratio of the indoor units connection.

SELECT

(*1) The number of connected indoor units
Ex.) When 8 units are connected

ENTER

(*2)

(*2) Volume ratio of the indoor units connection
Ex.) When the ratio is 120%

ENTER

- Exit indoor unit connection check mode.

When error occurs

Please refer to the following “Error code” for details

[Note] Error code
22.1: Connecting Indoor units capacity error
24.2: Connecting number of indoor unit error
26.1: Dual address number is existing
Other Error code: Refer to the Trouble shooting

ENTER

MODE/EXIT

When it finishes normally, nothing will be displayed on 7 segment display.

Troubleshooting 94 **INDOOR UNIT Error Method:** **Poor refrigerant circulation**	**Indicate or Display:** Indoor unit : Operation lamp (Green) : 10 times flash Timer lamp (Orange) : 8 times flash Filter lamp (Red) : Fast blink Outdoor unit : E.5U.1 Error code : A8

Detective Actuators:	**Detective details:**
Refrigerant leak detection device	Refrigerant leak detector (optional or locally purchased) operates to notify the refrigerant leak.

Forecast of Cause:

1. Refrigerant leak
2. Connection failure
3. Refrigerant leak detector failure
4. Controller PCB failure

Check Point 1 : Check for refrigerant leaks

Check if there is no refrigerant leak from the heat exchanger and the surrounding pipe connection.

↓ **OK**

Check Point 2 : Check refrigerant leak detector

Check the connection wiring (omission or disconnection) of the refrigerant leak detector.
Check the power of the refrigerant leak detector.
Check if the refrigerant leak detector is faulty.

↓ **OK**

Replace controller PCB

SERVICE INFORMATION

Network communication Abnormal

- Basic trouble shooting procedure -

1. Check Error code in one network segment separately, and check the Error code of (OU, IU, RB Error LED, RC, ST)
   < If the system has more than 2 Net work segments, disconnect the other Network segment.>

2. Connect Service tool to the Outdoor unit, and try out **"Address checker"** Function by the Service toll.
   < Check missing indoor unit or RB unit or outdoor unit by using Address checker function of Service tool>

3. Check terminal resistance value 53 Ohm ± 5% + Line Resistance on the terminal borad one by one.
   < Terminal Resistance is located on the Outdoor unit PCB(activated SET 5-4 ON), and the Main PCB of RB Unit each >
   *Refer to the wiring diagram of Networlk cable

Exsample

Terminal Resistance Ⓐ is located on the controller PCB of Outdoor unit as the Network for RB unit, Cooling only Indoor unit
Terminal Resistance Ⓑ is located on the Main PCB of RB unit as the Network for Indoor unit 1
Terminal Resistance Ⓒ is located on the Main PCB of RB unit as the Network for Indoor unit 2
Terminal Resistance Ⓓ is located on the Main PCB of RB unit as the Network for Indoor unit 3 and Indoor unit 4

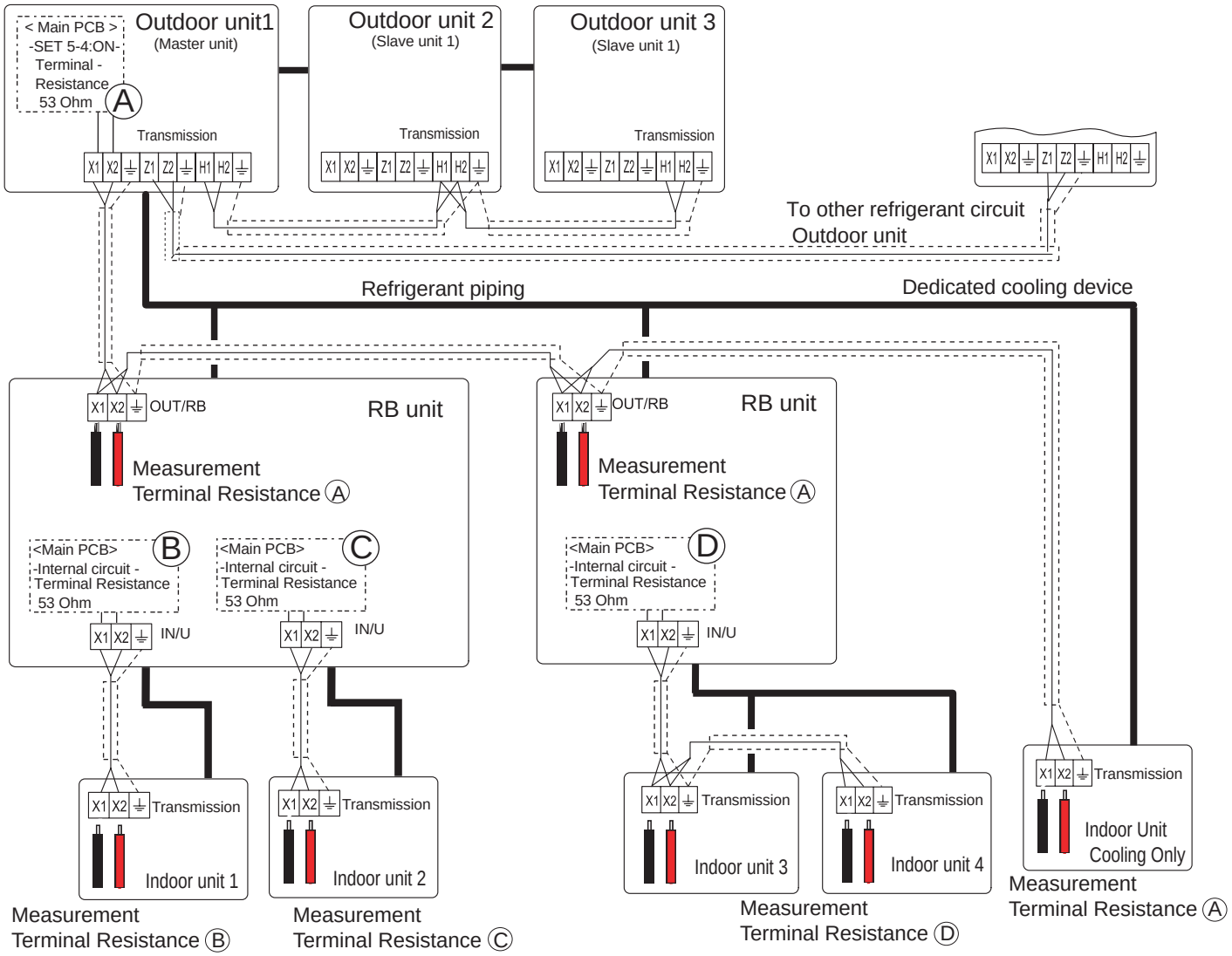

SERVICE INFORMATION

RB Unit Abnormal (No Cooling, No Heating, Abnormal Noise)

- Check functioning of Solenoid Valve * Valve or Pipe Blockage , Opposite operation of Valves can be the cause of Noise problem.
- Check Solenoid coil position / connection
- Chedk pipe temperautre difference during operation

Solenoid valve Controlling

SV No. (Indication on Service Tool)	Function	Cooling / Dry mode	Heating mode	Fan mode / Stop
SV1 (SVD1)	Discharge Valve	Close	Open	Close
SV4 - 6 (SVS)	Suction Valve	Open	Close	Close
SV2 (SVB2)	Equalization Valve (Pressurization)	Close	Open	Close
SV3 (SVB1)	Equalization Valve (Decompression)	Open	Close	Open

Position of Solenoid coil

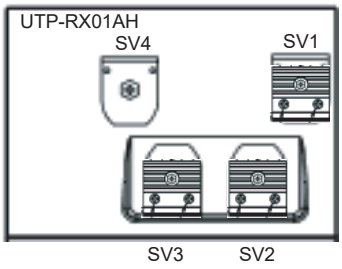

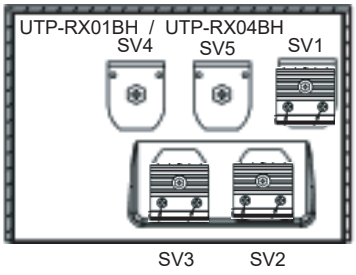

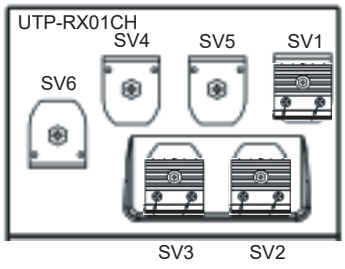

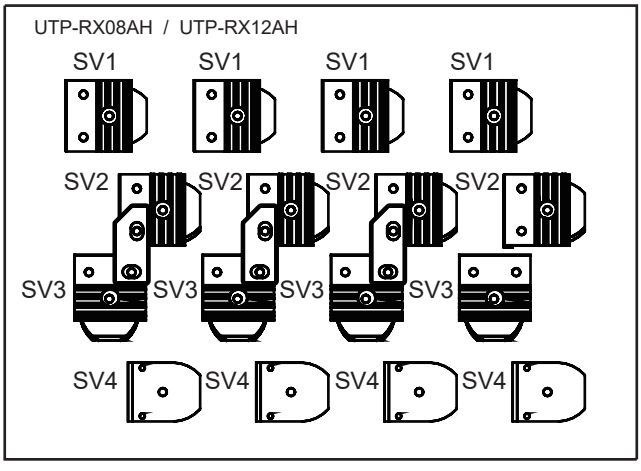

Color of Connector

SV1	Green
SV2	Blue
SV3	Black
SV4	White
SV5	Red
SV6	Yellow

Solenoid Coil resistance

<Refer to the Parts information 25>

CAUTION: The solenoid coil which has a heat sink is hot.
When you approach the solenoid coil, turn off the power supply for the RB unit and wait until the temperature of coil becomes low.

Pipe temperature in Cooling mode

Normal Operation

	Low Pressure Pipe	Indoor unit Gas Pipe
Pipe Temp.	COLD	COLD

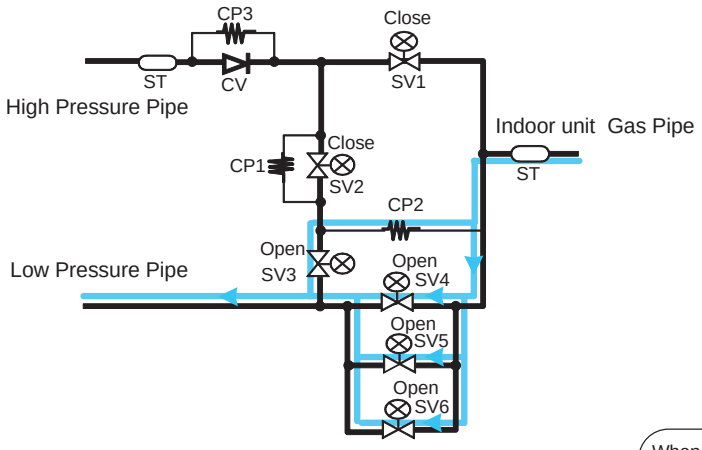

Possible Cause

	Low Pressure Pipe	Indoor unit Gas Pipe
Pipe Temp.	COLD	Less COLD

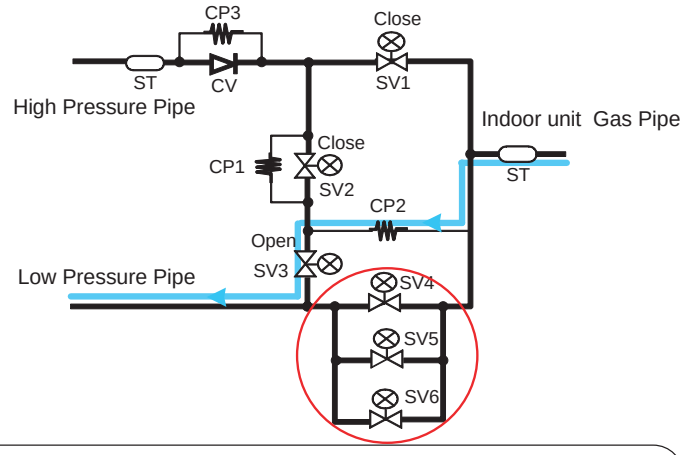

When SV4, SV5 SV6 internal blockage or Close position, the refrigerant flow will be lessened,
Indoor unit Gas pipe Temp. > Low pressure pipe temp

Pipe temperature in Heating mode

Normal Operation

	High Pressure Pipe	Indoor unit Gas Pipe
Pipe Temp.	HOT	HOT

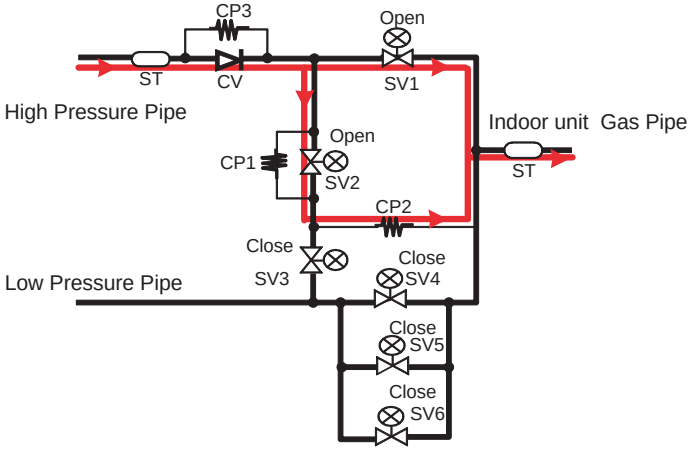

Possible Cause

	High Pressure Pipe	Indoor unit Gas Pipe
Pipe Temp.	HOT	Less HOT

When SV1, blockage or Close position, the refrigerant flow will be lessened,
Indoor unit Gas pipe Temp. < Hi pressure pipe temp

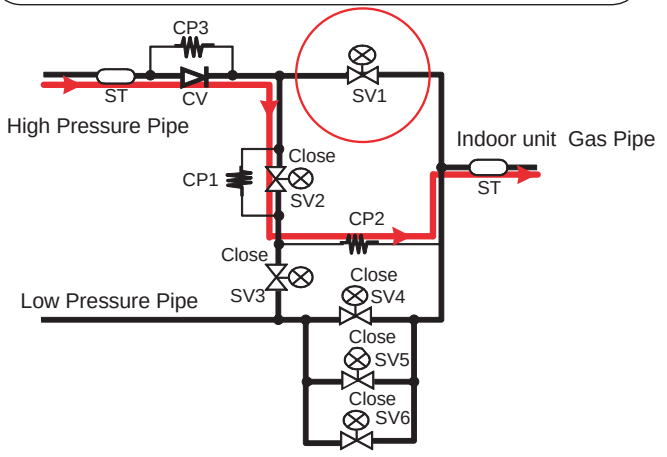

SERVICE INFORMATION

Backup Operation

Details :

- Backup operation is the operating method of replacing compressor while the system is running. Compressor can be replaced without stopping the system.
- In backup operation, cooling and heating capacity is decreased by the capacity of the separated outdoor unit.
- The work procedure is as follows.

4-4-1 Backup operation

1. Method of backup operation

1-1. Backup operation when compressor of the master unit is defective.

[Procedure]
(Example: Three outdoor units are connected.)

1. Stop the operation, and turn off the all outdoor units. (Make sure the pressure equalization has been finished.)

2. Fully shut off the 3-way valve (Liquid, High pressure gas, Low pressure gas) of the broken master unit.

3. Set the **Slave unit #1** as a new master unit, and make up the system of two outdoor units.
   - Change the setting of the DIP SW 3-1 / 3-2 (Outdoor unit address setting) of the slave unit #1, from [OFF / ON](slave unit #1) to [OFF / OFF](**Master unit**).
   - Change the setting of the DIP SW 3-3 / 3-4 (Number of slave units connected setting) of the slave unit #1, from [OFF / OFF](zero unit) to [OFF / ON](one unit).

4. Set up the **Slave unit #2** as the slave unit #1.
   - Change the DIP SW 3-1/ 3-2 (Outdoor unit address setting) of the slave unit #2, from [ON/ OFF](slave unit #2) to [OFF/ ON](**Slave unit #1**).

5. Uncouple the transmission connector between the broken master unit and indoor units, and connect it into the slave unit #1 (substitutional master unit).

6. Change the setting of the DIP SW 5-1/ 5-2 (Number of outdoor unit) of the slave unit #1 (substitutional master unit) and #2 (substitutional slave unit #1), from [ON/ OFF](3) to [OFF/ ON](2).

7. Turn on the units except the broken master unit, and wait for more than 30 seconds. (Do not turn on the broken master unit)

8. It is ready for Backup operation. Start operation as usual.

1-2. Backup operation when compressor of the slave unit #1 is broken.

[Procedure]
(Example: Three outdoor units are connected. the slave unit #1 is broken.)

1. Stop the operation, and turn off the all outdoor units. (Make sure the pressure equalization has been finished)

2. Fully shut off the 3-way valve (Liquid, High pressure gas, Low pressure gas) of the broken slave unit #1.

3. Make up the system of two outdoor units (master and slave) by changing the DIP SW of the master unit.
   - Change the DIP SW 3-3/ 3-4 (Number of slave units connected) of the master unit, from [ON/OFF](two units) to [OFF/ON](one unit).

4. Set up the slave unit #2 as Slave unit #1.
   - Change the DIP SW 3-1/ 3-2 (Outdoor unit address setting) of the slave unit #2, from [ON/ OFF](slave unit #2) to [OFF/ ON](slave unit #1).

5. Change the DIP SW 5-1/ 5-2 (Number of outdoor unit) of the master unit and the slave unit #2 (substitutional slave unit #1), from [ON/ OFF](three) to [OFF/ ON](two).

6. Turn on the units except the broken slave unit, and wait for more than 30 seconds. (Do not turn on the broken slave unit)

7. It is ready for Backup operation. Start operation as usual.

4-4-2 Work procedure after the backup operation

1. Refrigerant shortage at the backup operation

When excessive refrigerant accumulates in the defective outdoor unit during the backup operation, it becomes capacity shortage by refrigerant shortage.

The meaning of the sign

- LPS : Low pressure sensor detection value
- EEV1 : Expansion valve #1
- EEV2 : Expansion valve #2
- TH2 : Outdoor temperature sensor detection value
- TH3 : Suction temperature sensor detection value
- TH7 : Heat -Ex.1 gas temparture sensor detection value
- TH8 : Heat -Ex.2 gas temparture sensor detection value
- TH9 : Heat -Ex.1 liquid temparture sensor detection value
- TH10 : Heat -Ex.2 liquid temparture sensor detection value

<How to judge, when refrigerant is deficient>

Refrigerant shortage is judged by the information from "Service tool" during backup operation.
The outdoor unit shall enter the Cooling Main mode or Heating Main mode.

1. On Cooling operation

① It often creates "Low pressure protection stop".
>>> When LPS < 0.1MPa for 10 minutes or When LPS < 0.05Mpa
If one of this condition happens 5 times within 180 minutes, the system stops permanently.

② Running indoor unit's EEV is fully open condition.
>>> It displays corresponding indoor unit's EEV on the chart at the bottom of the monitor.
If there is no sign of closing the EEV from fully opened condition.

2. On Heating operation

① It often creates "Low pressure protection stop".
>>> When LPS < 0.1MPa for 10 minutes or When LPS < 0.05Mpa
If one of this condition happens 5 times within 180 minutes, the system stops permanently.

② EEV1 opens at 480 pulse. (fully open)
EEV2 opens at 480 pulse. (fully open)

③ Suction superheat is too high, when the condition is following
TH9 < Th7, TH10 < TH8, TH2≒TH3
Note: The suctin SH can be larger temprary at the start up, oil recovery, defrosting.
Even if the lowpressure protection does not occur, keep watching the operating condition for a while.

<How to respond, when refrigerant is deficient>

① Reuse the refrigerant of the broken master unit.

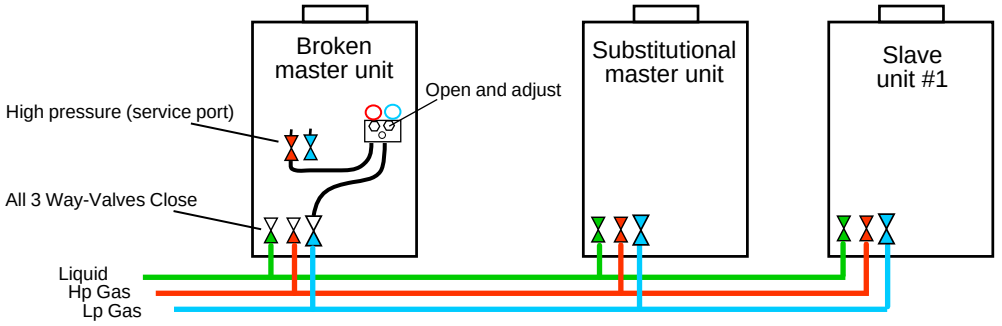

Connect the high pressure service port of the broken master unit and the low pressure pipe of the broken master unit by pressure gauge.

>>> Refrigerant release from the heat exchanger of the broken master unit.
(Refrigerant is removed until refrigerant shortage is resolved)

When new refrigerant is added to the operating system, check the weight of additional refrigerant,and adjust the total refrigerant amout after repairing.

② Recover the remaining refrigerant in the broken master unit from the service port(s).

2. Refrigerant charging after the compressor replacement.

① If the amount of recovered refrigerant is available that was pulled out of outdoor unit which compressor was replaced.
(When the refrigerant is recovered by refrigerant recovery machine, and its weight is measured.)

>>> Perform vacuuming of repaired outdoor unit thoroughly, and add the refrigerant with the recovered amount.

② If the amount of recovered refrigerant from outdoor unit that compressor was replaced is not sure.
(When the refrigerant leakage was the case.)

>>> Once recover all units' refrigerant, and recharge the calculated amount of refrigerant (Original amount and additional amount) again after vacuuming.

Note: To use the recovered refrigerant is not recommended in case of refrigerant leakage.
Always charge fresh refrigerant with correct amount for the system after repairing.

SERVICE PARTS INFORMATION 1

Compressor

Diagnosis method of Compressor (If Outdoor Unit 7 segment LED displays Error, refer to Trouble shooting)

Does not start up

- Is any Indoor unit in operation?

* If it is operated right after stopping operation, Start-up protection (3min - max.6min) by differential pressure is kicked on.

- Check power supply voltage,open fuse.
- Is there open or loose connection cable?

- In case of inverter compressor, check Filter PCB, Inverter PCB, connection of Compressor, and winding resistance (Refer to the next page).

>> If there is no failure, the defect of Compressor is considered (Locked compressor due to clogged dirt or less oil)

Replace Compressor

Stops soon after starting up

- Check power supply voltage,open fuse.
- Is there open or loose connection cable?

- Are all of the 3-way valves open? (Low pressure is too low or High pressure is too high.)

- Check if refrigerant is leaking or amount of additional refrigerant is insufficient. (Repair the leak and Recharge refrigerant)

- Check if Strainers are clogged. (Strainers before and after EEV1, 2)

In case of inverter compressor, check Filter PCB, Inverter PCB, connection of Compressor, and winding resistance. (Refer to the next page).

>> If there is no failure, the defect of Compressor can be considered. (Compression part broken or valve defective.)

Replace Compressor

Abnormal noise

- Check power supply voltage, open fuse. Is there open or loose connection cable?

Defective Compressor can be considered. (due to inside dirt clogging or broken component)

Replace Compressor

Note

If it is suspected of lack of oil, we recommend also replacing OIL RETURN VALVE A ASSY(P/N 9378745032) together with Compressor.

SERVICE PARTS INFORMATION 2

Inverter Compressor

Check Point 1 : Check Connection

- ☐ Check terminal connection of Compressor (loose or incorrect wiring)
- ☐ Check connection of magnet relay (Loose or incorrect wiring)

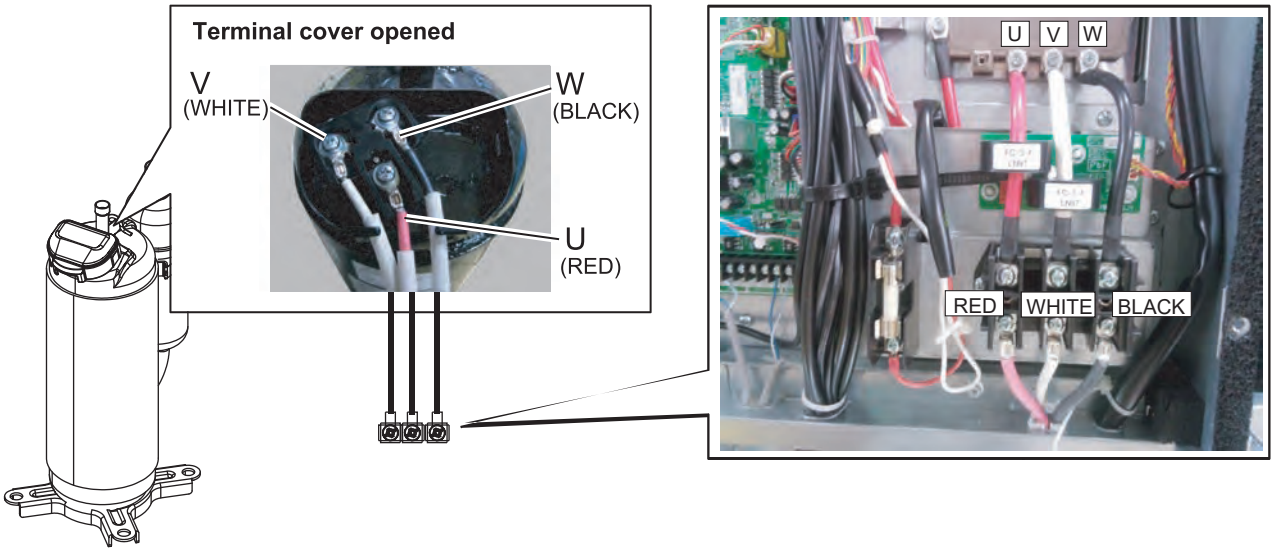

Check Point 2 : Check Winding Resistance

- ☐ Check winding resistance of each terminal

▶ **If the resistance value is 0Ω or infinite, replace Compressor.**

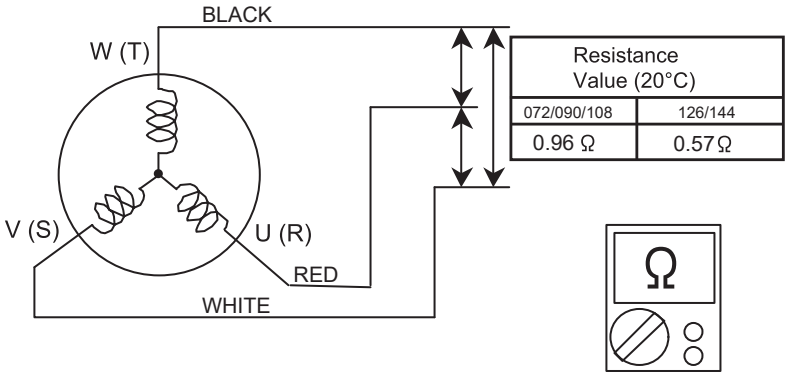

Resistance Value (20°C)	
072/090/108	126/144
0.96 Ω	0.57 Ω

Attention!!

If Check 1, 2 are normal, make sure the following points.

(1) Check AC voltage among each terminals from filter PCB(INV) to Diode Bridge.
(AC 208 - 230 V , voltage among L1, L2 and L3).
▶ **If it does not appear, check the power supply terminal.**

(2) Check Voltage from Main PCB to Inverter PCB.
(DC16.0 - 20.0V between terminals of CN126 (1-2) connector of Main PCB).
▶ **If it does not appear, replace Main PCB.**

◆ **If both of above voltages appear, it is considered to be Inverter PCB circuit failure. Replace Inverter PCB and check operation.**

SERVICE PARTS INFORMATION 3

Main PCB
Filter PCB (Main)

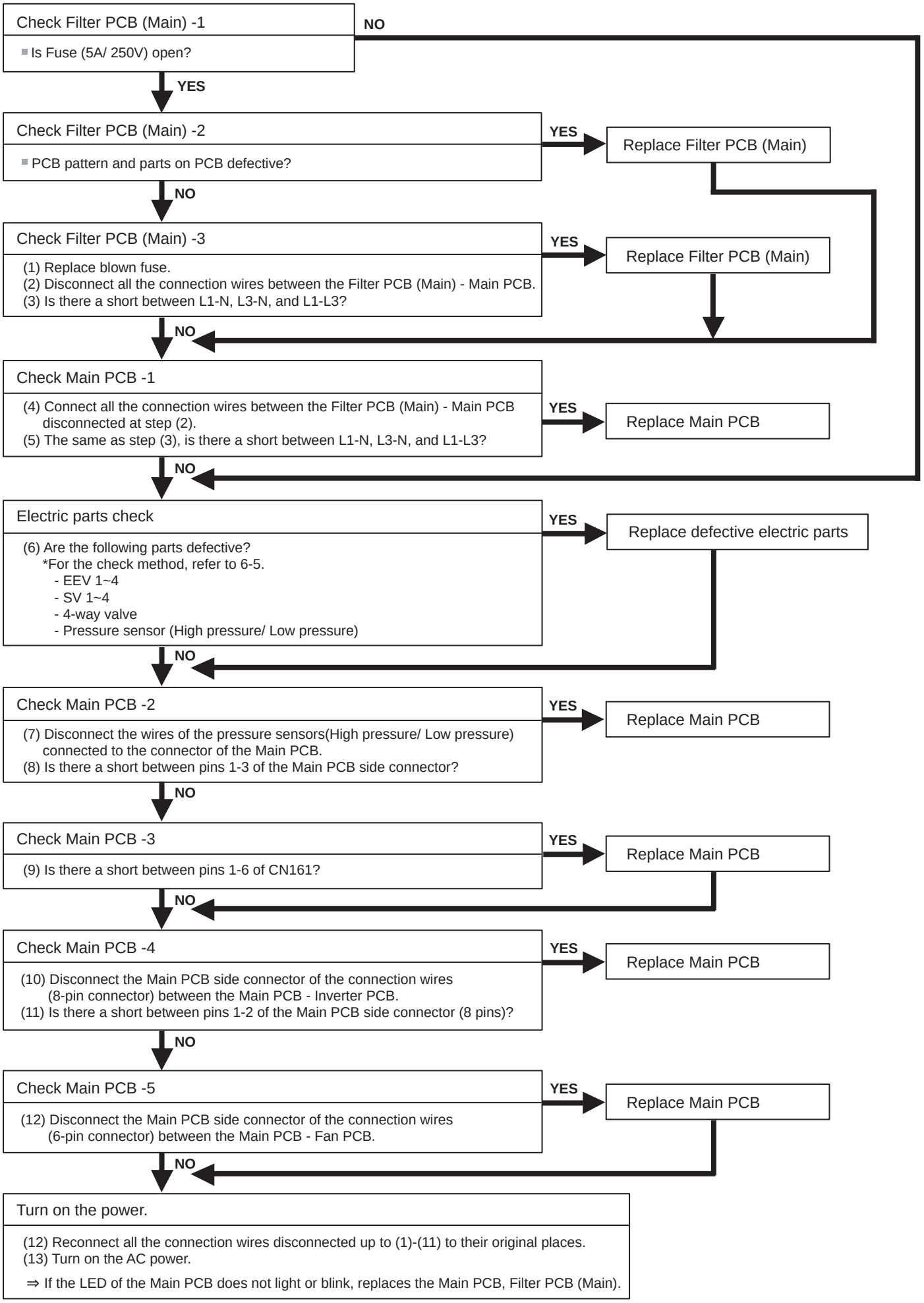

SERVICE PARTS INFORMATION 4

Inverter PCB
Filter PCB (INV)

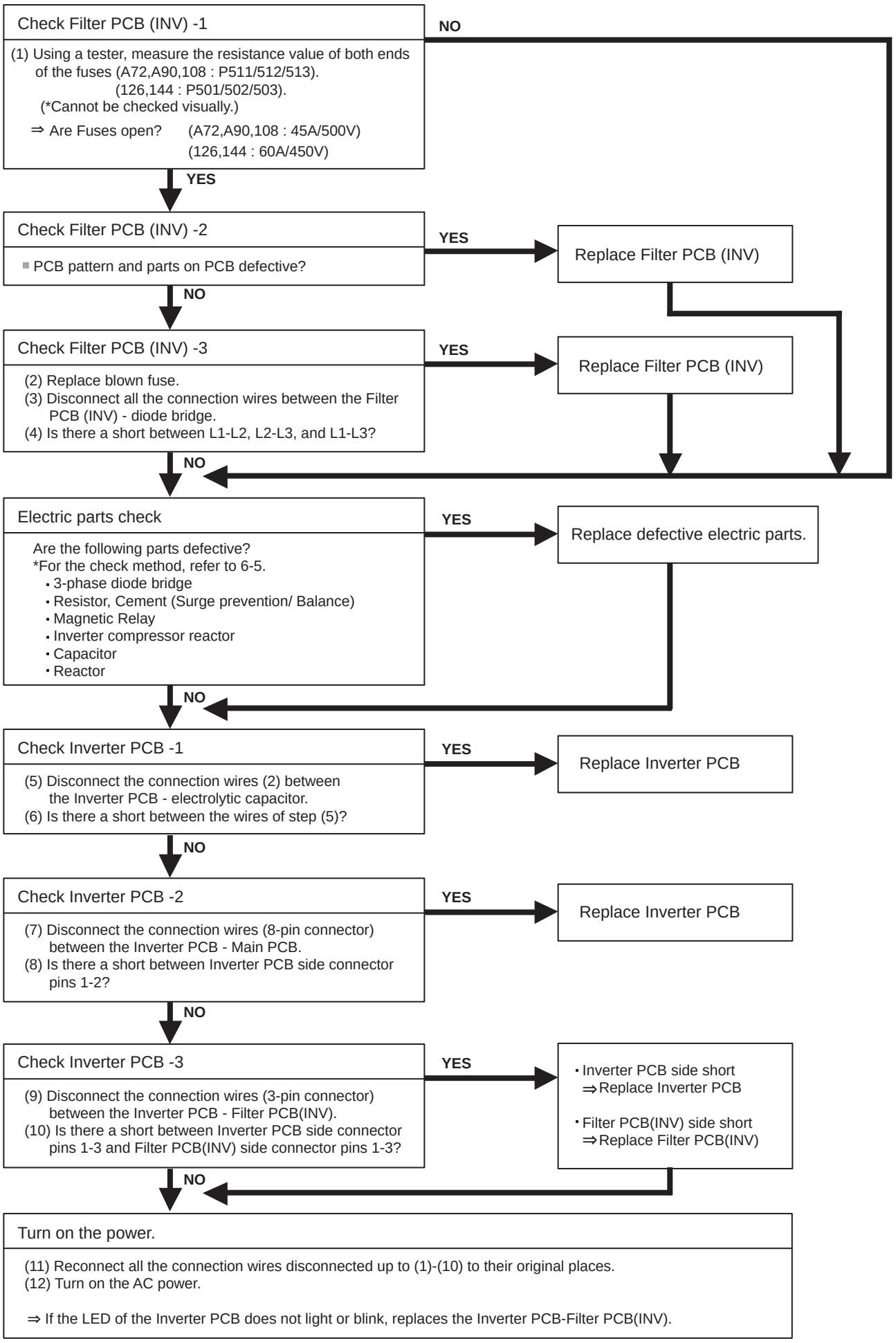

SERVICE PARTS INFORMATION 5

Fan Driver PCB

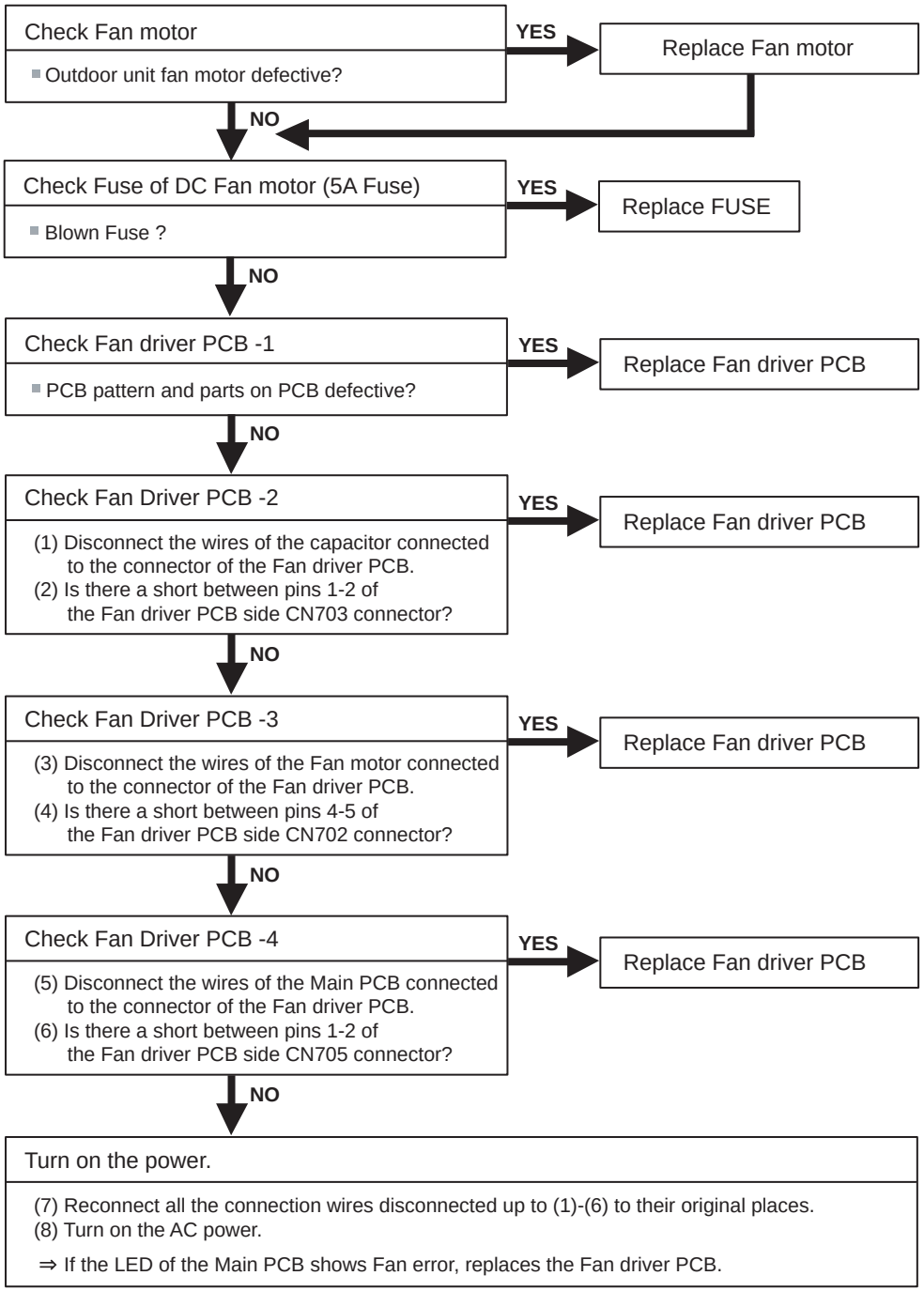

SERVICE PARTS INFORMATION 6

Filter PCB(INV)

Check Point 1

- Measure the resistance of Filter PCB(INV) by following procedure.
  1. Turn OFF the Outdoor unit(s) power supply
  2. Disconnect the connection wires between the Filter PCB(INV) - Inverter PCB.
  3. Measure the resistance value

Filter PCB(INV) [K11CE-1100HUE-FL0]

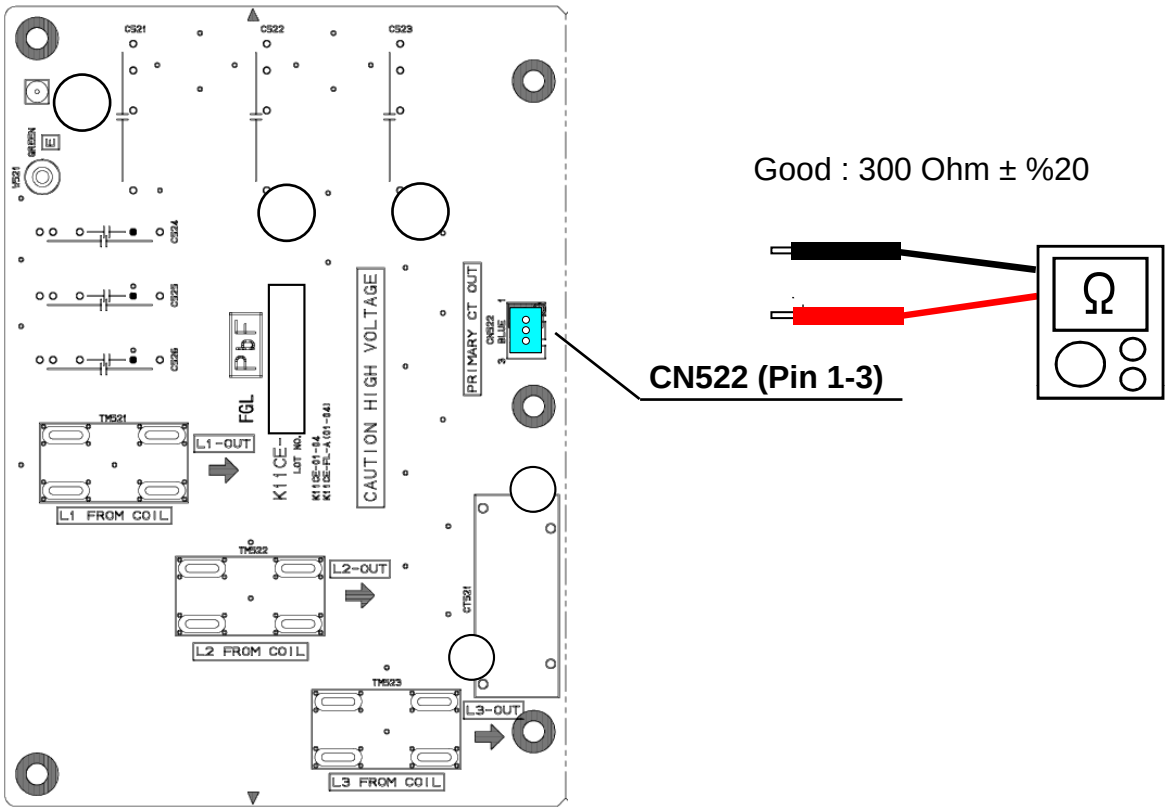

SERVICE PARTS INFORMATION 7

IPM
(Mounted on Inverter PCB)

Check Point 1

① Disconnect the connection wires between the Inverter PCB - electrolytic capacitor and Inverter PCB - Inverter Compressor.

② Set the tester to the "Resistance" mode, and measure the resistance between the following terminals.

Red wire (P) - screw terminals U/V/W
White wire (N) - screw terminals U/V/W

③ Judge the result of ② as follows:

All 6 points several MΩ or greater	: Normal
1 or more points several kΩ to short	: Defective

Inverter PCB

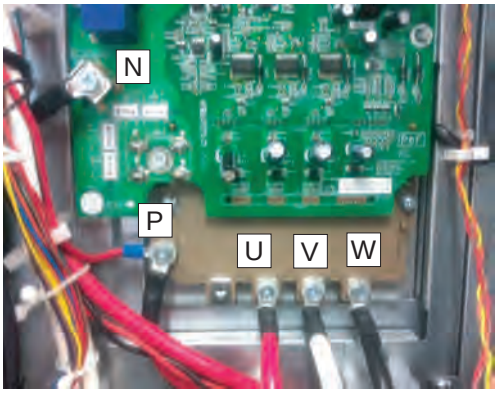

Check Point 2

④ Set the tester to the "Diode" mode, and measure the voltage value between the following terminals.

Tester +side (red)	Tester - side (black)	Tester display [V]
Terminal U	Red wire (P)	
Terminal V		
Terminal W		
White wire (N)	Terminal U	
	Terminal V	
	Terminal W	

⑤ Judge the result of ④ as follows:

All 6 points several 0.3V to 0.7V	: Normal
1 or more points under 0.1V or over load	: Defective

SERVICE PARTS INFORMATION 8

3-Phase Diode Bridge

Check Point 1 : Appearance check

- ☐ No fissures, breaks, damage, etc. at body and terminal section?
- ☐ Is the rear of the body coated with silicone grease?
- ☐ Are there no abnormalities at threaded parts (stripped threads, deformation, damage, etc.) ?

Check Point 2 : Electric check

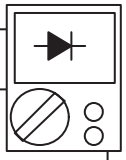

① In the 3-phase diode bridge single part state, set the tester to the "Diode" mode, and measure the voltage value between the following terminals.

Tester + side (red)	Tester - side (black)
Pin 1	Pin 4
Pin 2	
Pin 3	
Pin 5	Pin 1
	Pin 2
	Pin 3

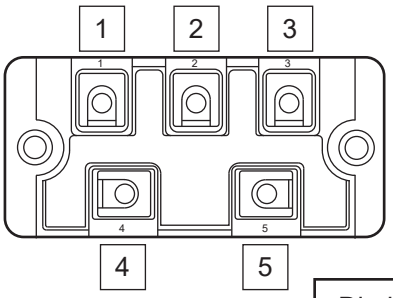

Diode bridge

② Judge the result of ① as follows:

All 6 points several 0.3V to 0.7V	Normal
1 or more points under 0.1V or over load	Defective

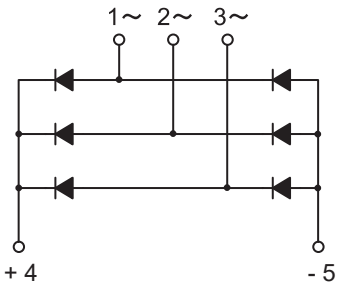

③ Set the tester to the "Diode" mode, and measure the voltage value between the following terminals.

Tester + side (red)	Tester - side (black)
Pin 4	Pin 1
	Pin 2
	Pin 3
Pin 1	Pin 5
Pin 2	
Pin 3	

④ Judge the result of ③ as follows:

All 6 points over load	Normal
1 or more points except over load	Defective

SERVICE PARTS INFORMATION 9

Reactor

Check Point 1 : Appearance check

□ No fissures, breaks, damage, etc. at the body and winding section, terminals section?

Check Point 2 : Electric check

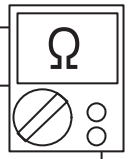

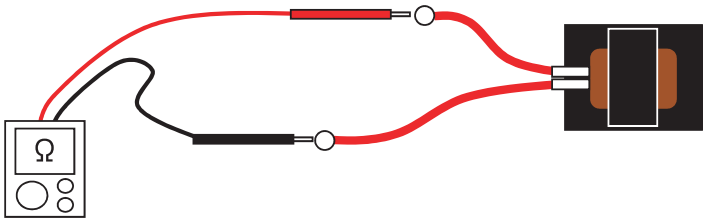

① Set the tester to the "Resistance" mode, and check for open/short between both ends of the reactor wire (or connector).

② Judge the result of ①as follows:

Short	: Normal
Open	: Abnormal (open)

SERVICE PARTS INFORMATION 10

Resistor, Cement

Check Point 1 : Appearance check

□ No fissures, breaks, damage, etc. at the body and terminals section?

Check Point 2 : Electric check

1. Surge prevention resistor (connected to magnetic contactor)

① Set the tester to the "Resistance" mode, and measure the resistance value between the terminals. (No polarity)

② Judge the result of ① as follows:

9.9Ω to 10.1 Ω	Normal
Other than the above	Deteriorated, defective

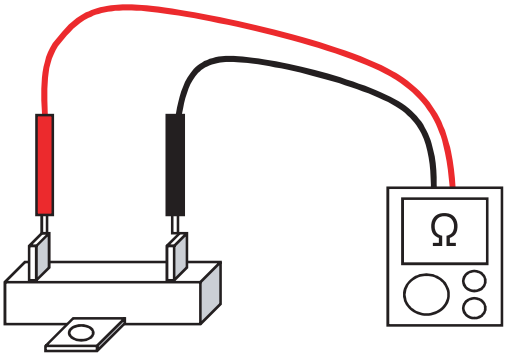

2. Discharge resistor (connected to electrolytic capacitor)

① Set the tester to the "Resistance" mode, and measure the resistance value between the terminals. (No polarity)

② Judge the result of ① as follows:

53.2kΩ to 58.8kΩ	Normal
Other than the above	Deteriorated, defective

SERVICE PARTS INFORMATION 11

Terminal

Check Point 1 : Appearance check

- ☐ No fissures, breaks, damage, etc. at the body and terminals section?
- ☐ Not clogged with foreign matter?
- ☐ Are there no abnormalities at threaded parts (Stripped threads, deformation, damage, etc.) ?

Check Point 2 : Electric check

- ☐ No short between adjacent terminals?
- ☐ Conducts before and after same terminal?

SERVICE PARTS INFORMATION 12

Magnetic Relay

Check Point 1 : Appearance check

- ☐ No fissures, breaks, damage, etc. at the body and terminals section?
- ☐ Are there no abnormalities at threaded parts (Stripped threads, deformation, damage, etc.) ?

Check Point 2 : Electric check

① Set the tester to the "Resistance" mode, and check for open/short between the following terminals. (No polarity)

- Between R to U
- Between S to V
- Between T to W

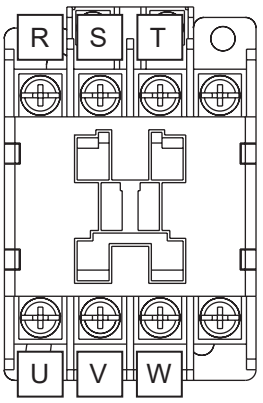

② Judge the result of ① as follows:

Open	: Normal
Short	: Abnormal (contacts fused)

SERVICE PARTS INFORMATION 13-1

Indoor Unit Electronic Expansion Valve (EEV)

Check Point 1 : Check Connections

■ Check Connectors (Loose connector or open cable.)

Compact cassette,4-way flow cassette,
One way floe cassette,Low static pressure duct(Mini duct),
Medium static pressure duct,Medium static pressur duct
(High efficiency),High static pressure duct,High static
pressure duct(High efficiency),Compact floor,
Wall mounted,Outdoor air unit

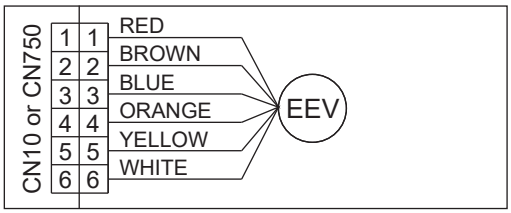

* DX-Kit : CN10,CN11

Floor/Ceiling,Ceiling

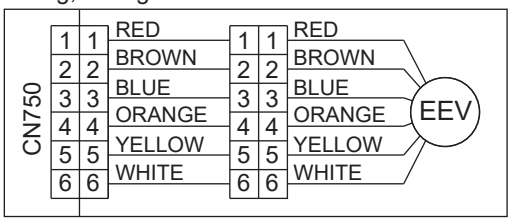

Check Point 2 : Check Coil of EEV

■ Remove connector, check each winding resistance of Coil.

Read wire	Resistance value 68°F(20°C)
White - Red	**200 ± 10%** Ω
Yellow - Brown	
Orange - Red	
Blue - Brown	

▶ **If Resistance value is abnormal, replace EEV.**

Check Point 3 : Check Noise at start up

Turn on Power and check operation noise.
>> If an abnormal noise does not show, replace Controller PCB.

Check Point 4 : Check Voltage from Controller PCB

■ Remove Connector and check Voltage (DC12V).
>> If it does not appear, replace Controller PCB.

Check Point 5 : Check Opening and Closing Operation of Valve

When Valve is closed,
it has a temp. difference between Inlet and Outlet.

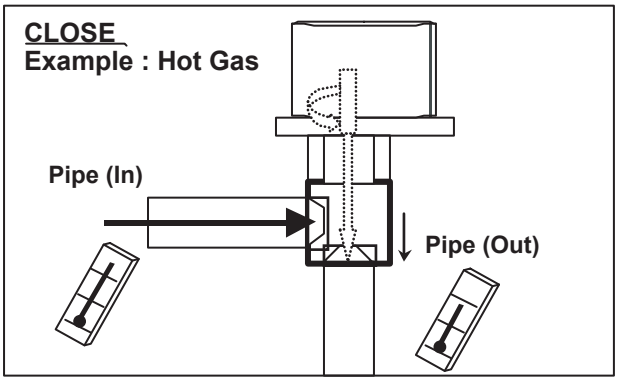

If it is open,
it has no temp. difference between Inlet and Outlet.

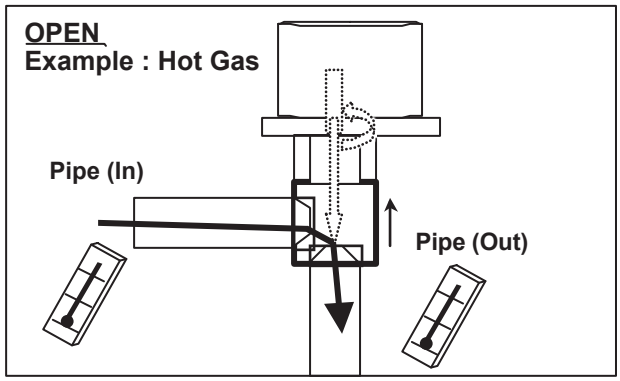

Check Point 6 : Check Strainer

Strainer normally does not have temperature difference between inlet and outlet as shown in (1), but if there is a difference as shown in (2), there is a possibility of inside clogged. In this case, replace Strainer.

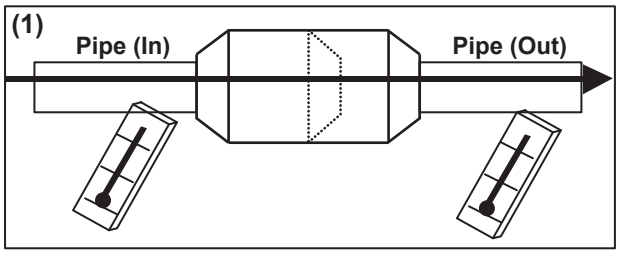

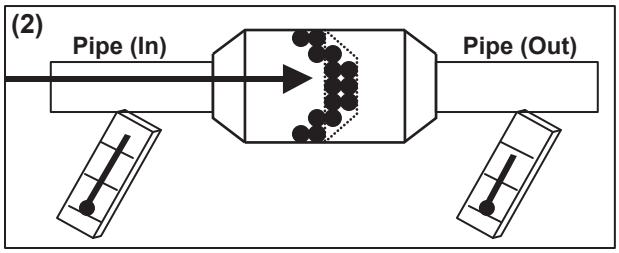

SERVICE PARTS INFORMATION 13-2

Indoor Unit Electronic Expansion Valve (EEV)

Check Point 1 : Check Connections

☐ Check Connectors (Loose connector or open cable.)

Circular flow cassette,3D flow cassette,
Wall mounted

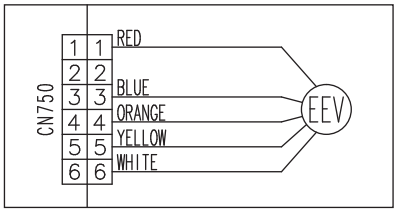

Check Point 2 : Check Coil of EEV

☐ Remove connector, check each winding resistance of Coil.

Read wire	Resistance value (20°C)
White - Red	**46 ± 10%Ω**
Yellow - Red	
Orange - Red	
Blue - Red	

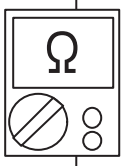

▶ **If Resistance value is abnormal, replace EEV.**

Check Point 3 : Check Noise at start up

Turn on Power and check operation noise.

>> If an abnormal noise does not show, replace Controller PCB.

Check Point 4 : Check Voltage from Controller PCB

☐ Remove Connector and check Voltage (DC12V).

>> If it does not appear, replace Controller PCB.

Check Point 5 : Check Opening and Closing Operation of Valve

When Valve is closed,
it has a temp. difference between Inlet and Outlet.

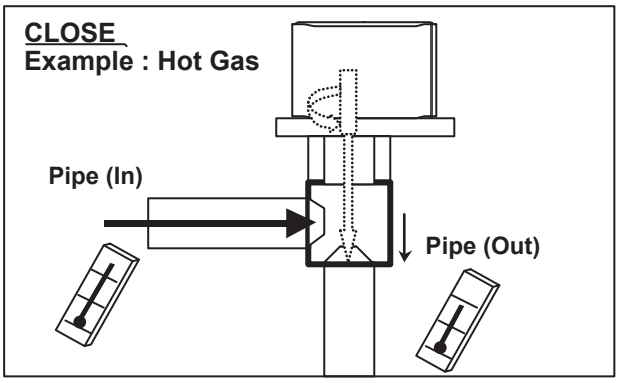

If it is open,
it has no temp. difference between Inlet and Outlet.

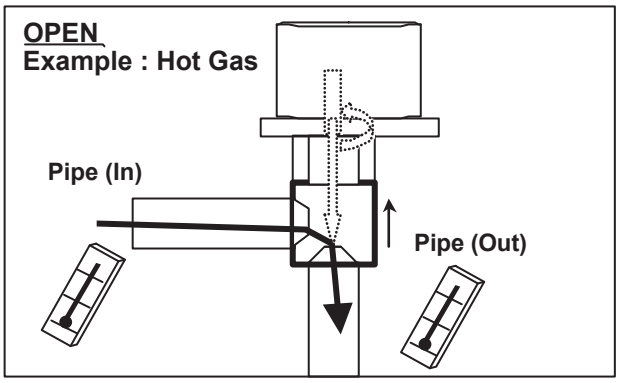

Check Point 6 : Check Strainer

Strainer normally does not have temperature difference between inlet and outlet as shown in (1), but if there is a difference as shown in (2), there is a possibility of inside clogged. In this case, replace Strainer.

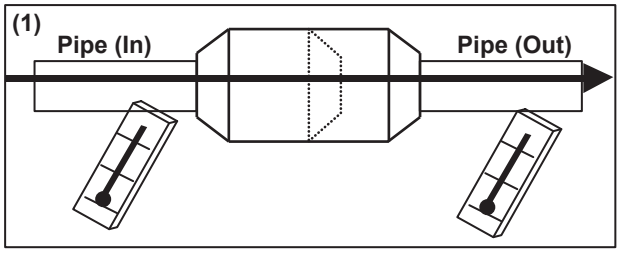

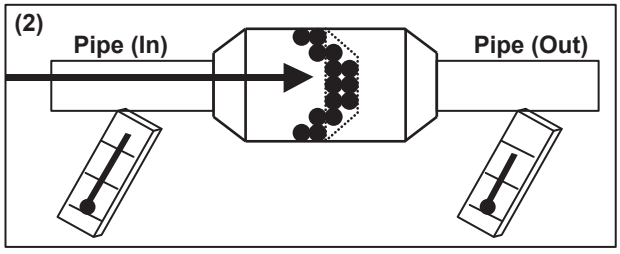

SERVICE PARTS INFORMATION 13-3

Indoor Unit Electronic Expansion Valve (EEV)

Check Point 1 : Check Connections

☐ Check Connectors (Loose connector or open cable.)

Circular flow cassette,Wall mounted

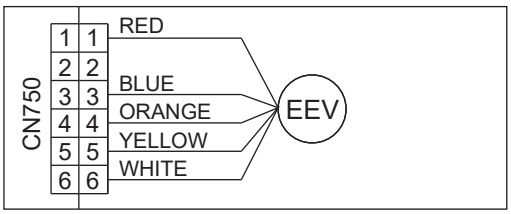

Low static pressure duct(Slim duct)

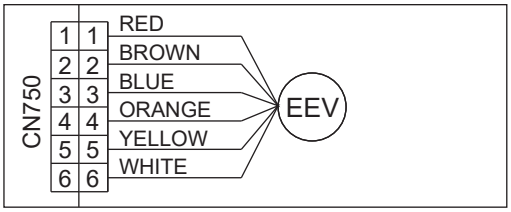

Check Point 2 : Check Coil of EEV

☐ Remove connector, check each winding resistance of Coil.

Read wire	Resistance value (20°C)
White - Red	**150 ± 10%Ω**
Yellow - Red	
Orange - Red	
Blue - Red	

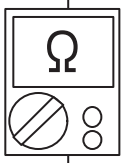

▶ **If Resistance value is abnormal, replace EEV.**

Check Point 3 : Check Noise at start up

Turn on Power and check operation noise.

>> **If an abnormal noise does not show, replace Controller PCB.**

Check Point 4 : Check Voltage from Controller PCB

☐ Remove Connector and check Voltage (DC12V).

>> **If it does not appear, replace Controller PCB.**

Check Point 5 : Check Opening and Closing Operation of Valve

When Valve is closed,
it has a temp. difference between Inlet and Outlet.

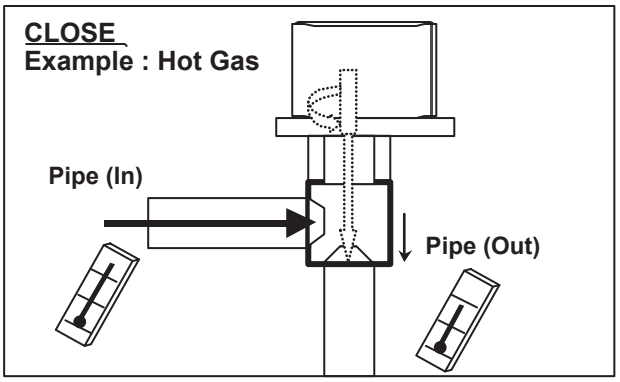

If it is open,
it has no temp. difference between Inlet and Outlet.

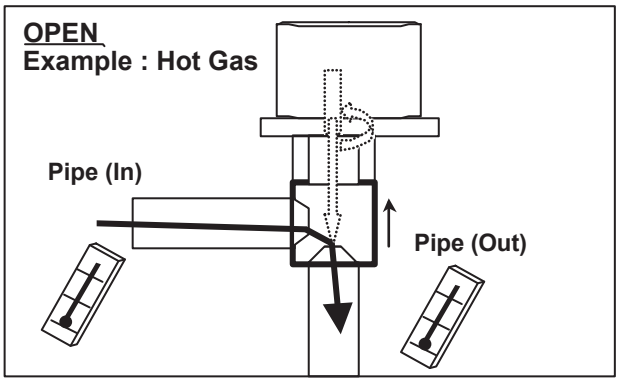

Check Point 6 : Check Strainer

Strainer normally does not have temperature difference between inlet and outlet as shown in (1), but if there is a difference as shown in (2), there is a possibility of inside clogged. In this case, replace Strainer.

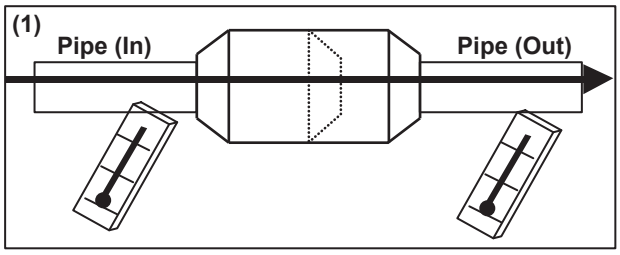

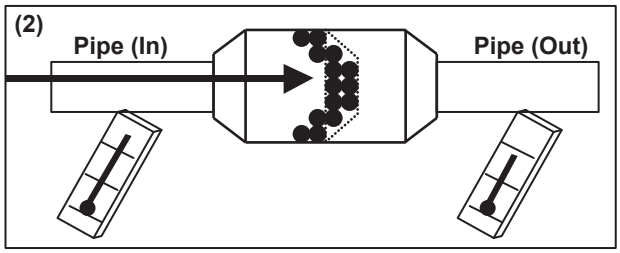

SERVICE PARTS INFORMATION 14

Outdoor Unit Electronic Expansion Valve (EEV1)

Check Point 1 : Check Connections

☐ Check connection of connector (CN116)
(Loose connector or open cable)

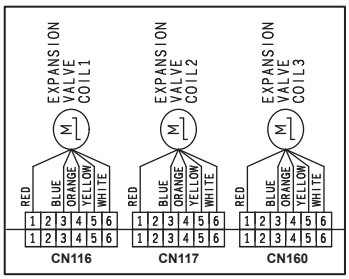

Check Point 2 : Check Coil of EEV1

☐ Remove connector, check each winding resistance of Coil.

Read wire	Resistance value 20 °C
White - Red	46 ± 4 % Ω
Yellow - Red	
Orange - Red	
Blue - Red	

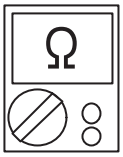

▶ **If Resistance value is abnormal, replace EEV1.**

Check Point 3 : Check Noise at start up

☐ Turn on Power and check operation noise.
>> If an abnormal noise does not show, replace Controller PCB.

Check Point 4 : Check Voltage from Controller PCB

☐ Remove Connector and check Voltage (DC12V).
>> If it does not appear, replace Controller PCB.

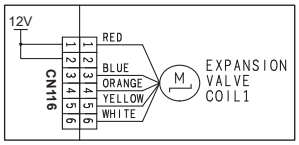

Check Point 5 : Check Opening and Closing Operation of Valve

Note : Check the EEV1 in the state of 4-way1 valve is ON.

When EEV1 is closed,
it has no temp. difference between Inlet and Outlet.

If it is open, it has a temp. difference between Inlet and Outlet.
Outlet temp. is near Low-pressure saturated temp.

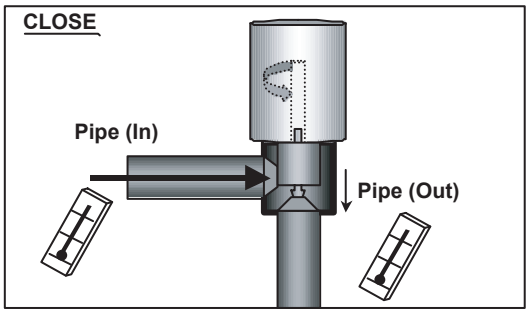

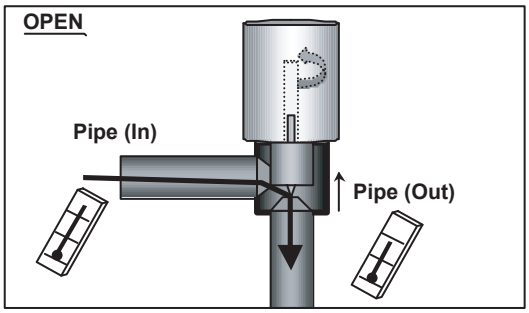

In the following cases, even if EEV1 is closed, there may be a difference in temp.
- On comp. start-up
- Just after swiching the 4-way valve1
- Just after swiching the EEV1 (Open --> Close)

Note
If valve opening is 12~51pls,
the check of temp. cannot be performed.
Check temp. at the other valve opening.

Check Point 6 : Check Strainer

Strainer normally does not have temperature difference between inlet and outlet as shown in (1), but if there is a difference as shown in (2), there is a possibility of inside clogged. In this case, replace Strainer.

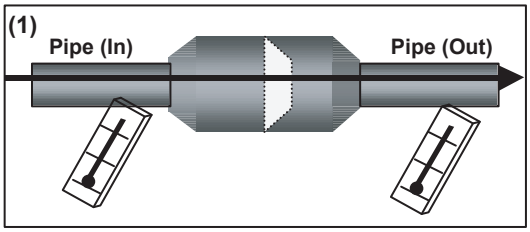

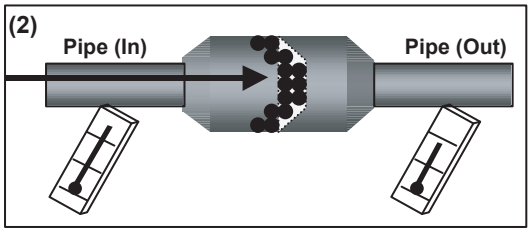

SERVICE PARTS INFORMATION 15

Outdoor Unit Electronic Expansion Valve (EEV2)

Check Point 1 : Check Connections

☐ Check connection of connector (CN117)
(Loose connector or open cable)

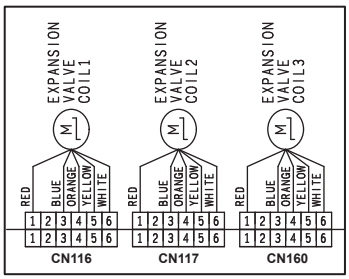

Check Point 2 : Check Coil of EEV2

☐ Remove connector, check each winding resistance of Coil.

Read wire	Resistance value 20°C
White - Red	**46 ± 4 %Ω**
Yellow - Red	
Orange - Red	
Blue - Red	

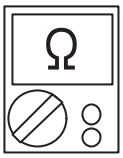

▶ **If Resistance value is abnormal, replace EEV2.**

Check Point 3 : Check Noise at start up

☐ Turn on Power and check operation noise.
>> If an abnormal noise does not show, replace Controller PCB.

Check Point 4 : Check Voltage from Controller PCB

☐ Remove Connector and check Voltage (DC12V).
>> If it does not appear, replace Controller PCB.

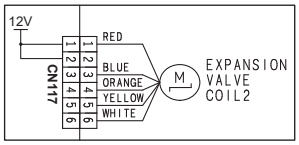

Check Point 5 : Check Opening and Closing Operation of Valve

Note : Check the EEV2 in the state of 4-way valve2 is ON.

When EEV2 is closed,
it has no temp. difference between Inlet and Outlet.

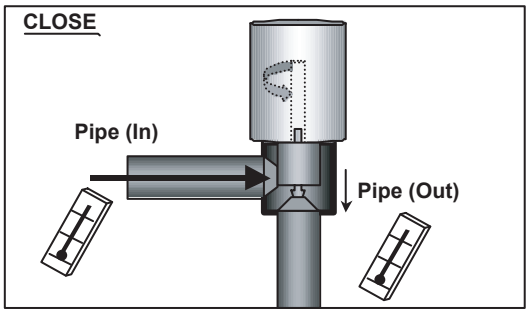

If it is open, it has a temp. difference between Inlet and Outlet.
Outlet temp. is near Low-pressure saturated temp.

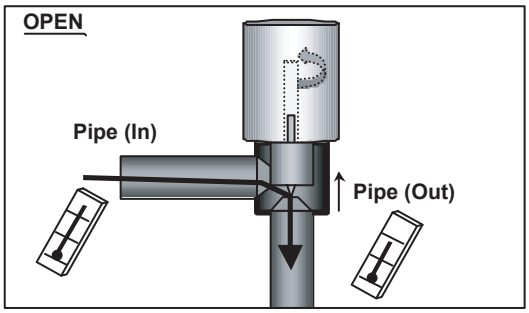

In the following cases, even if EEV2 is closed, there may be a difference in temp.
- On comp. start-up
- Just after swiching the 4-way valve2
- Just after swiching the EEV2 (Open --> Close)

Note
If valve opening is 12~51pls,
the check of temp. cannot be performed.
Check temp. at the other valve opening.

Check Point 6 : Check Strainer

Strainer normally does not have temperature difference between inlet and outlet as shown in (1), but if there is a difference as shown in (2), there is a possibility of inside clogged. In this case, replace Strainer.

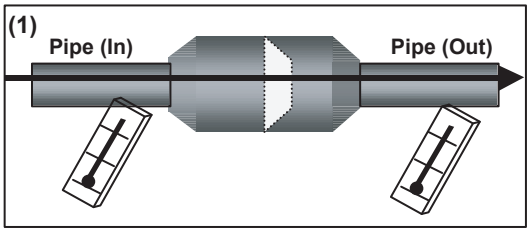

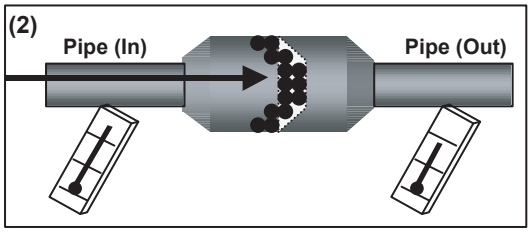

SERVICE PARTS INFORMATION 16

Outdoor Unit Electronic Expansion Valve (EEV3)

Check Point 1 : Check Connections

☐ Check connection of connector (CN160)
(Loose connector or open cable)

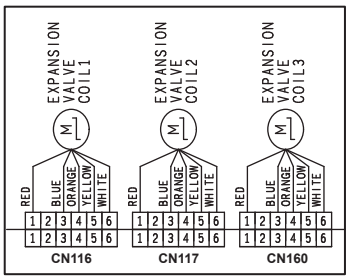

Check Point 2 : Check Coil of EEV3

☐ Remove connector, check each winding resistance of Coil.

Read wire	Resistance value 20˚C
White - Red	**46 ± 4 %Ω**
Yellow - Red	
Orange - Red	
Blue - Red	

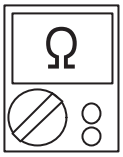

▶ **If Resistance value is abnormal, replace EEV3.**

Check Point 3 : Check Noise at start up

☐ Turn on Power and check operation noise.
>> If an abnormal noise does not show, replace Controller PCB.

Check Point 4 : Check Voltage from Controller PCB

☐ Remove Connector and check Voltage (DC12V).
>> If it does not appear, replace Controller PCB.

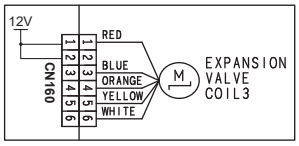

Check Point 5 : Check Opening and Closing Operation of Valve

When EEV3 is closed,
it has no temp. difference between Inlet and Outlet.

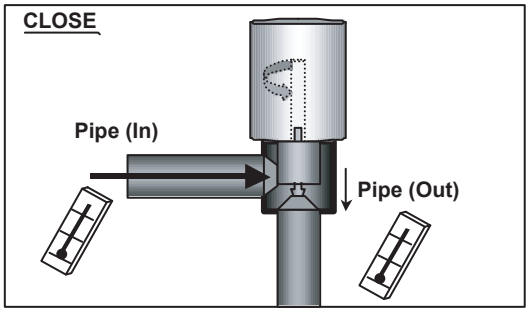

If it is open, it has a temp. difference between Inlet and Outlet.
Outlet temp. is near Low-pressure saturated temp.

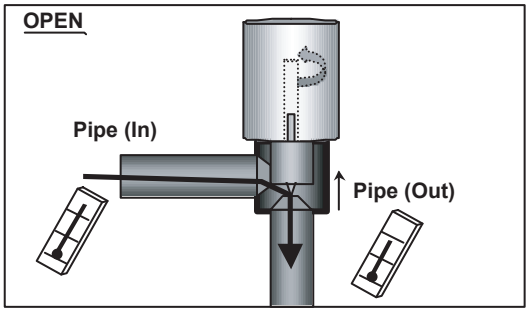

In the following cases, even if EEV3 is closed, there may be a difference in temp.
- On comp. start-up
- Just after swiching the EEV3 (Open --> Close)

Note
If valve opening is 12~51pls,
the check of temp. cannot be performed.
Check temp. at the other valve opening.

Check Point 6 : Check Strainer

Strainer normally does not have temperature difference between inlet and outlet as shown in (1), but if there is a difference as shown in (2), there is a possibility of inside clogged. In this case, replace Strainer.

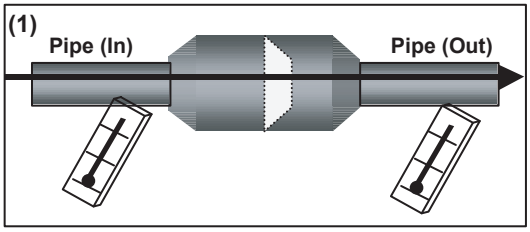

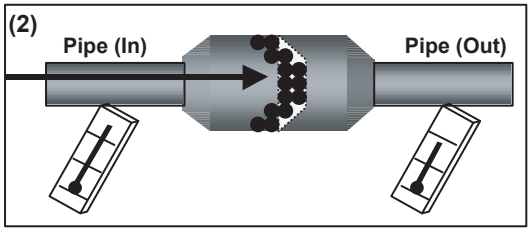

SERVICE PARTS INFORMATION 17

Outdoor Unit Solenoid Valve
(SV1, SV2, SV3, SV4)

Check Point 1 : Check connections

☐ Check connection of connector.
(Loose connector or open cable)

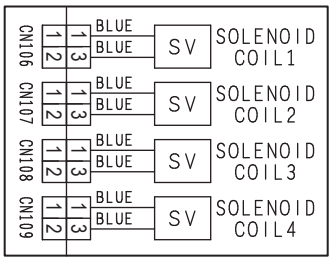

Check Point 2 : Check Solenoid Coil

☐ Remove connector and check if coil is open.

Solenoid Coil	Resistance value
SV1	1324Ω ±7%
SV2, SV3	1495Ω ±7%
SV4	1434.5Ω ±10%

Resistance value 20°C)

>> If Resistance value is abnormal, replace Solenoid Coil.

Check Point 3 : Check Voltage from Main PCB

☐ Remove connector and check the voltage (AC230V).
>> If the voltage does not appear, replace Main PCB.

Check Point 4-1 : Check opening & closing operation of SV1, SV2

☐ Depending on either during operation or protection control, check if Valve is operating normally.
(When Valve opens, Inlet and Outlet temperature is raised.)

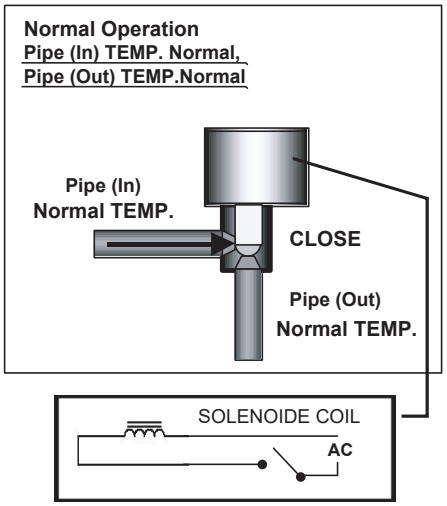

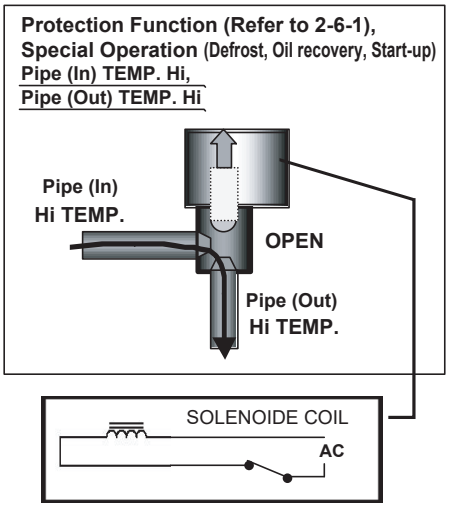

☐ If the valve closes by removing the connector of the valve which does not close, it is considered to be Main PCB failure. Replace Main PCB.

☐ If it does not close by removing connector, there is a possibility of (1) clogging by dirt, or (2) deformation by the heat at the time of Solenoid Valve installation.
In this case, replace Solenoid Valve.

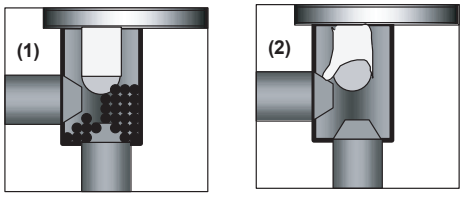

Check Point 4-2 : Check operation of SV3

☐ Check the operation noise when the connector of SV3 is removed.

- When SV3 is open
  - The sound of operation noise is heard ---> Normal
  - The sound of operation noise is not heard. ---> Replace SV3
- When SV3 is closed
  - The sound of operation noise is heard ---> Replace Main PCB
  - The sound of operation noise is not heard. ---> Normal

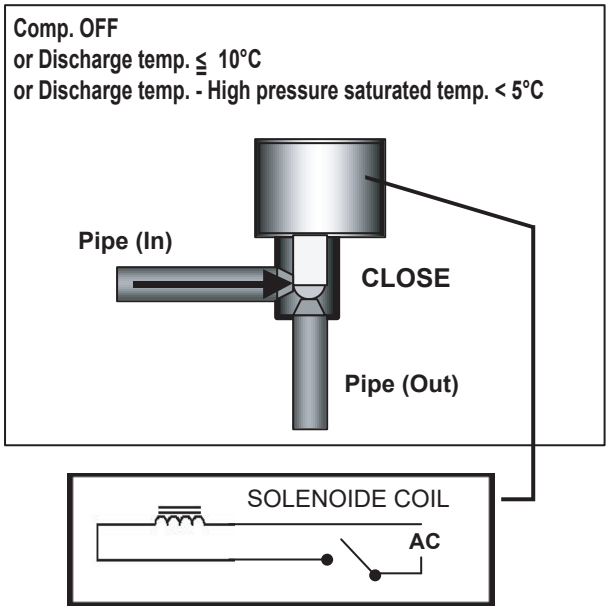

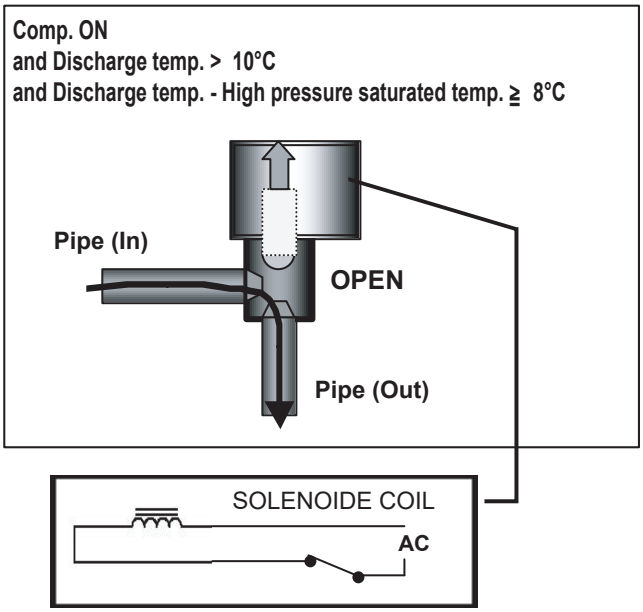

Check Point 4-3 : Check opening & closing operation of SV4

☐ Check if Valve is operating normally.
(When Valve opens, Inlet and Outlet temperature is raised.)

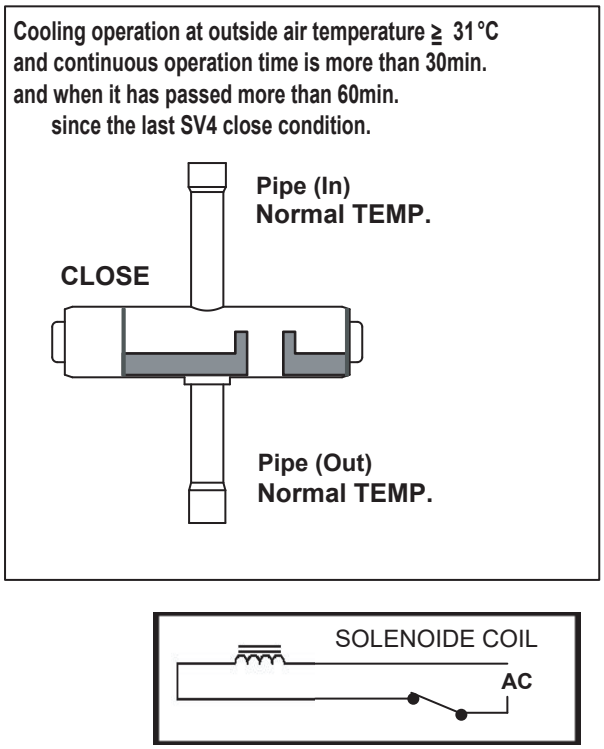

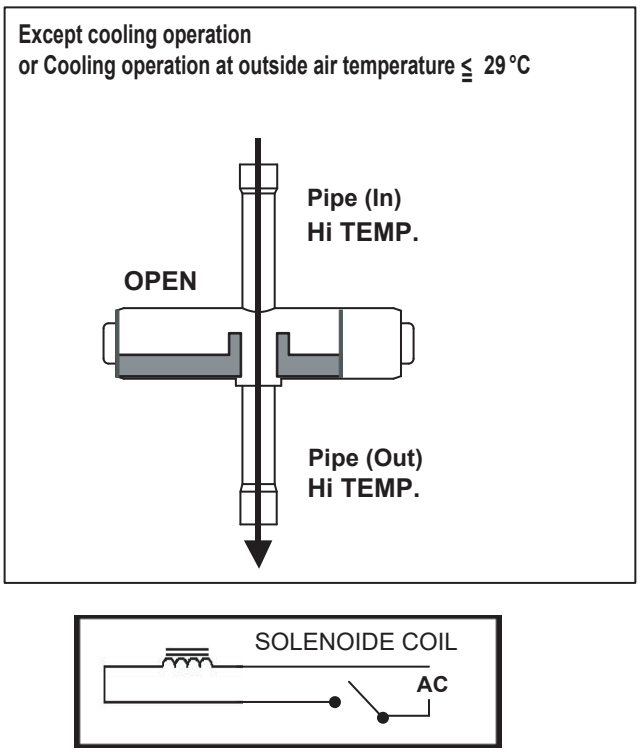

☐ If the valve does not open when the connector of SV4 is removed from Main PCB,
Replace SV4.

SERVICE PARTS INFORMATION 18

4-WAY VALVE 1 (2)

Check Point 1 : Check Circuit connection

・Check the connection of connector CN105 (CN156)

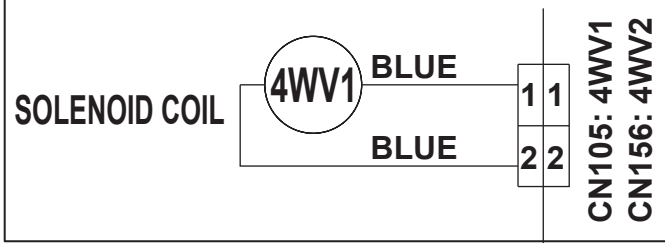

Check Point 2 : Check Solenoid Coil

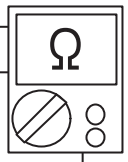

・Remove CN105 (CN156) from PCB and check the resistance value of coil

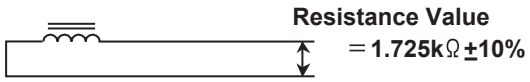

☆If it is Open or abnormal resistance value, replace Solenoid Coil

Check Point 3: Check Operation of 4 Way Valve

・Check each piping temperature, and confirm the location of the valve by the temperature difference.

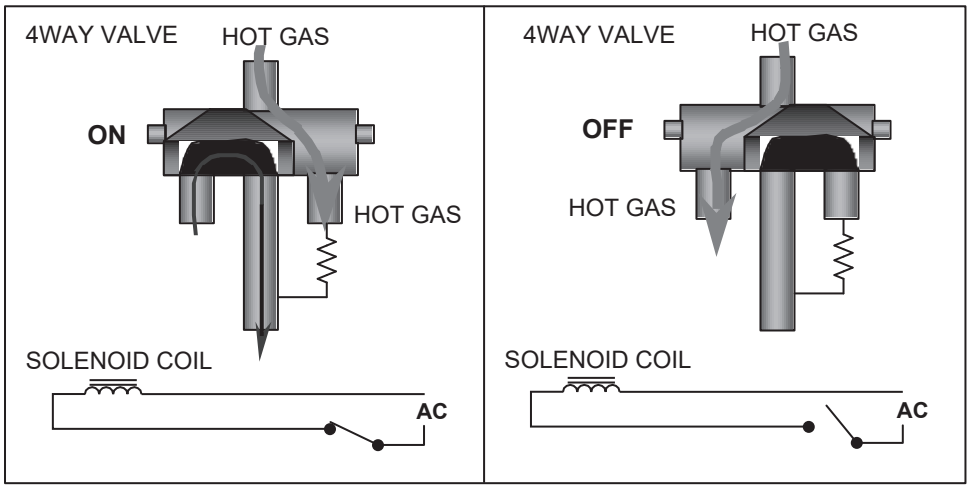

☆If the valve location is not proper, replace 4 way valve.

Check Point 4: Check Voltage of Solenoid Coil

・If CN105 (CN156) of Control PCB dose not Show (AC230V) during Heating operation (Compressor is in operation), replace Main PCB.

SERVICE PARTS INFORMATION 19

Indoor Unit AC Fan Motor

Check Point : ARXC45GATH, ARXC60GATH (High Static Pressure Duct Type)

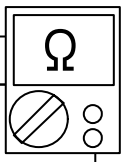

☐ Check each winding resistance of the motor

► **If Resistance value is abnormal, replace motor.**

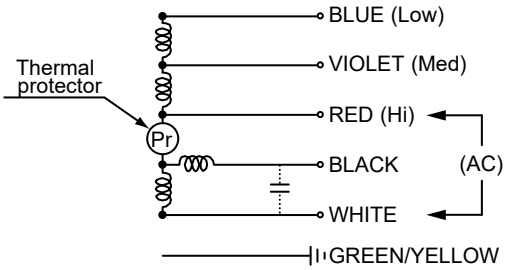

Lead wire	Resistance value
White – Red (Main winding)	**6.84** Ω
Red – Black (Start winding)	**9.78** Ω
Red – Violet (Speed reduction winding 1)	**6.10** Ω
Violet – Blue (Speed reduction winding 2)	**6.10** Ω

at 20°C

SERVICE PARTS INFORMATION 20-1

Indoor Unit Fan Motor <DC motor>

⚠ When you approach this part, please cut off the power supply and wait for a while until DC voltage has been discharged.

Check Point 1 : Check rotation of Fan

・Rotate the fan by hand when operation is off.
(Check if fan is caught, dropped off or locked motor)
>>If Fan or Bearing is abnormal, replace it.

Check Point 2 : Check resistance of Indoor Fan Motor

・Refer to below. Circuit-test "Vm" and "GND" terminal.
(Vm: DC voltage, GND: Earth terminal)
>>If they are short-circuited (below 300 kΩ), replace Indoor fan motor and Controller PCB.

Pin number (wire color)	Terminal function (symbol)
1 (Brown or Blue)	Feed back (FG)
2 (Yellow)	Speed command (Vsp)
3 (White)	Control voltage (Vcc)
4 (Black)	Earth terminal (GND)
5	No function
6 (Red)	DC voltage (Vm)

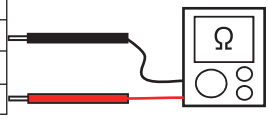

SERVICE PARTS INFORMATION 20-2

Indoor Unit Fan Motor <DC motor>
(Lower fan motor of Compact Floor model)

⚠ When you approach this part, please cut off the power supply and wait for a while until DC voltage has been discharged.

Check Point 1 : Check rotation of Fan

・Rotate the fan by hand when operation is off.
(Check if fan is caught, dropped off or locked motor)
>>If Fan or Bearing is abnormal, replace it.

Check Point 2 : Check resistance of Indoor Fan Motor

・Refer to below. Circuit-test "Vm" and "GND" terminal.
(Vm: DC voltage, GND: Earth terminal)
>>If they are short-circuited (below 300 kΩ), replace Indoor fan motor and Controller PCB.

Pin number (wire color)	Terminal function (symbol)
1 (Blue)	Feed back (FG)
2 (Yellow)	Speed command (Vsp)
3 (White)	Control voltage (Vcc)
4 (Black)	Earth terminal (GND)
5	No function
6	No function
7 (Red)	DC voltage (Vm)

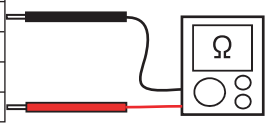

SERVICE PARTS INFORMATION 20-3

Indoor Unit Fan Motor <DC motor>
(For AS*A030 - 034GTEH, AS*E004 - 014GCEH, AUXK018 - 054GLEH, AUXM018 - 030GLEH, AUXS018 - 024GLEH)

⚠ When you approach this part, please cut off the power supply and wait for a while until DC voltage has been discharged.

Check Point 1 : Check rotation of Fan

・Rotate the fan by hand when operation is off.
(Check if fan is caught, dropped off or locked motor)
>>If Fan or Bearing is abnormal, replace it.

Check Point 2 : Check resistance of Indoor Fan Motor

・Refer to below. Circuit-test "Vm" and "GND" terminal.
(Vm: DC voltage, GND: Earth terminal)
>>If they are short-circuited (below 300 kΩ), replace Indoor fan motor and Controller PCB.

Pin number (wire color)	Terminal function (symbol)
1 (Red)	DC voltage (Vm)
2	No function
3	No function
4 (Black)	Earth terminal (GND)
5 (White)	Control voltage (Vcc)
6 (Yellow)	Speed command (Vsp)
7 (Brown or Blue)	Feed back (FG)

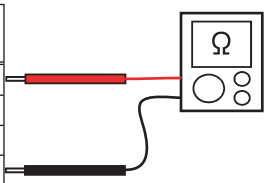

SERVICE PARTS INFORMATION 21

Outdoor unit fan motor

⚠ When you approach this part, please cut off the power supply and wait for a while until DC voltage has been discharged.

Check Point 1 : Check rotation of Fan

・Rotate the fan by hand when operation is off.
(Check if fan is caught, dropped off or locked motor)
>>If Fan or Bearing is abnormal, replace it.

Check Point 2 : Check resistance of Outdoor Fan Motor

・Refer to below. Circuit-test " Winding coil resistance U, V, W."
and the Location sensor Circuit test
>>If they are other resistance value, replace Outdoor fan motor.

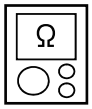

Pin number (wire color)	Terminal function (symbol)
U (Red) - W (Black)	2.8Ω
V (white) - U (Red)	
W (Black) - V (White)	
1 (Yellow) - 4 (Pink)	9.3 KΩ
2 (Blue) - 4 (Pink)	
3 (Orange) - 4 (Pink)	
4 (Pink) - 5 (Gray)	More than 1.2 KΩ
1 or 2 or 3 - 5 (Gray)	More than 10 KΩ

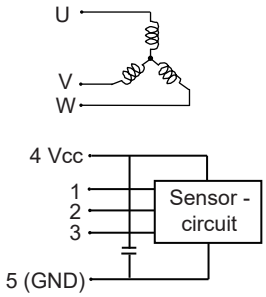

SERVICE PARTS INFORMATION 22

Discharge Pressure Sensor
Suction Pressure Sensor

1. Discharge Pressure Sensor

Check Point : Check Voltage from Main PCB

☐ With the connector connected to the PCB, measure the voltage between CN118:2-3 of the Main PCB.

- Characteristics of pressure sensor

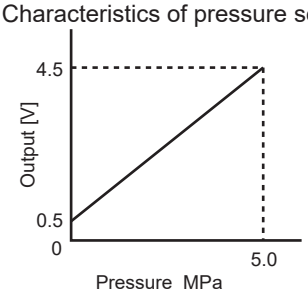

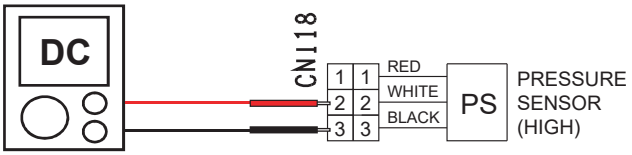

MPa	0.00	0.10	0.20	0.30	0.40	0.50	0.70	0.80	0.90	1.00	1.20	1.40	1.60	1.80	2.00
Output (V)	0.50	0.58	0.66	0.74	0.82	0.90	1.06	1.14	1.22	1.30	1.46	1.62	1.78	1.94	2.10

MPa	2.20	2.40	2.60	2.80	3.00	3.20	3.40	3.60	3.80	4.00	4.20	4.40	4.60	4.80	5.00
Output (V)	2.26	2.42	2.58	2.74	2.90	3.06	3.22	3.38	3.54	3.70	3.86	4.02	4.18	4.34	4.50

2. Suction Pressure Sensor

Check Point : Check Voltage from Main PCB

☐ With the connector connected to the PCB, measure the voltage between CN119:2-3 of the Main PCB.

- Characteristics of pressure sensor

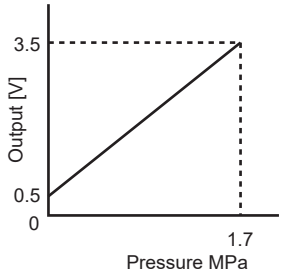

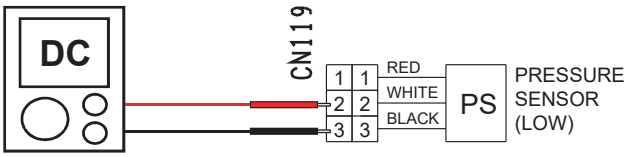

MPa	0.00	0.10	0.20	0.30	0.40	0.50	0.70	0.80	0.90	1.00	1.10	1.20	1.30	1.40	1.50
Output (V)	0.50	0.68	0.85	1.03	1.21	1.38	1.74	1.91	2.09	2.27	2.44	2.62	2.79	2.97	3.15

Mpa	1.60	1.70
Output (V)	3.32	3.50

SERVICE PARTS INFORMATION 23

Pressure Switch

▪ Type of contact

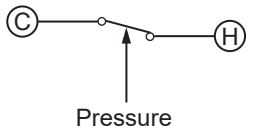

▪ Characteristics of pressure switch

Contact : Short ⇒ Open	4.2±0.1MPa
Contact : Open ⇒ Short	3.2±0.15MPa

SERVICE PARTS INFORMATION 24

Thermistor

Check Point : Check Thermistor resistance value

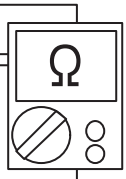

☐ Remove connector and check Thermistor resistance value.

Temperature [°C]	Resistance Value [kΩ]			
	Thermistor A	Thermistor B	Thermistor C	Thermistor D
-30	---	87.2	177.0	---
- 20	---	47.8	97.2	---
- 10	---	27.2	55.5	27.4
- 5	---	20.8	42.4	20.7
0	---	16.1	32.7	15.8
5	---	12.5	25.4	12.2
10	102.5	9.8	19.9	9.5
15	---	7.7	15.7	7.5
20	64.2	6.1	12.5	5.9
25	51.4	4.9	10.0	4.7
30	41.3	3.9	8.1	3.8
40	27.3	2.6	5.3	2.5
50	18.4	1.8	3.6	1.7
60	12.7	1.2	---	1.2
70	8.9	0.8	---	0.8
80	6.4	---	---	0.6
90	4.6	---	---	0.4
100	3.4	---	---	0.3
110	2.6	---	---	---
120	2.0	---	---	---
Applicable Thermistors	Discharge temp. TH1 Comp.1 temp. TH	Outdoor temp. TH Suction temp. TH Liquid temp. TH 1 Liquid temp. TH 2 Sub-cool heat- ex (outlet) TH Heat- ex 1 gas TH Heat- ex 2 gas TH Heat- ex 1 liquid TH Heat- ex 2 liquid TH	Outdoor temp. TH	Heat sink temp. TH

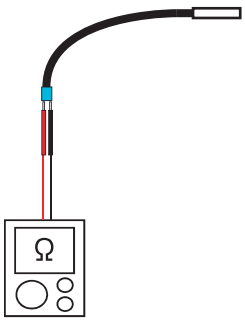

SERVICE PARTS INFORMATION 25

RB Unit Solenoid Valve
(SV1, SV2, SV3, SV4, SV5, SV6)

Check Point 1 : Check Solenoid Coil

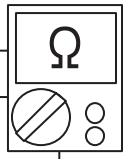

☐ Remove connector and check if coil is open.

Solenoid Coil	Resistance value
SV1,SV2,SV3,SV4,SV5,SV6	1.35KΩ ± 7%

>> If Resistance value is abnormal, replace Solenoid Coil.

Check Point 2: Check Voltage from Main PCB

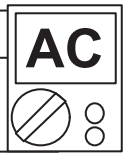

☐ Remove connector and check the voltage (AC230V).
>> If the voltage does not appear, replace Main PCB.

Single type
UTP-RX01AH
UTP-RX01BH
UTP-RX01CH

Multi type
UTP-RX04BH

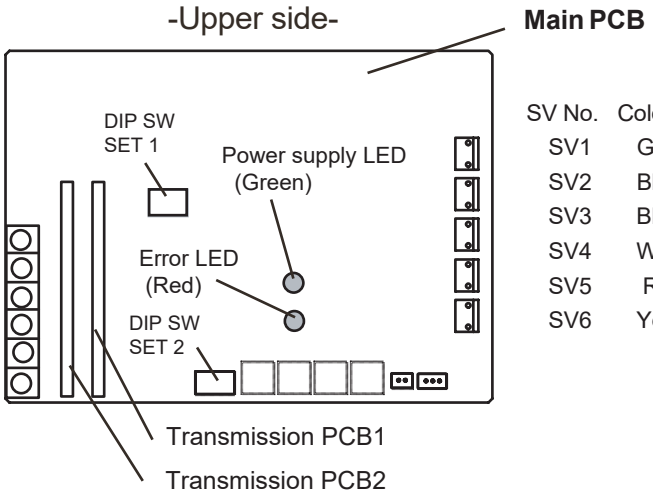

SV No.	Color of CN	SV Name on ST
SV1	Green	SVD1
SV2	Blue	SVB2
SV3	Black	SVS
SV4	White	SVS
SV5	Red	SVS
SV6	Yellow	SVS

Multi type
UTP-RX08AH
UTP-RX12AH

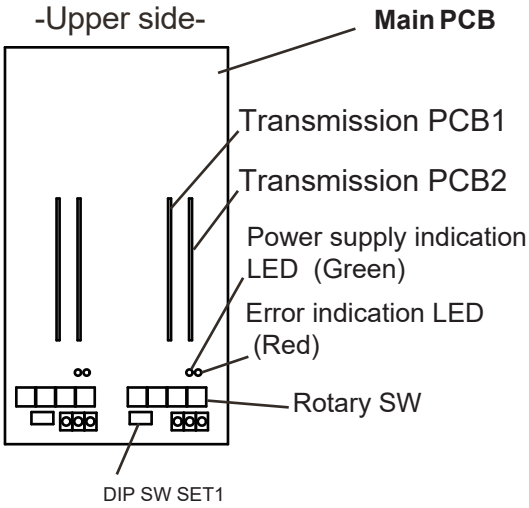

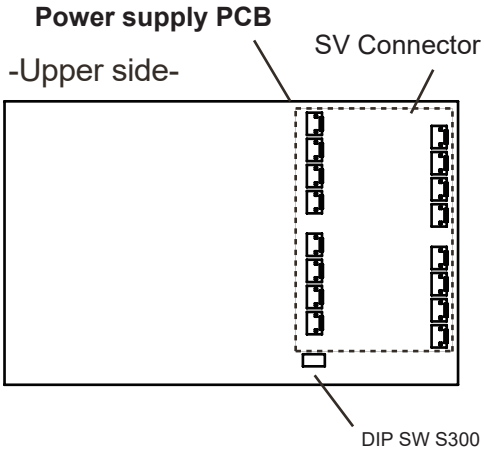

SV No.	Color of CN	SV Name on ST
SV1	Green	SVD1
SV2	Blue	SVB2
SV3	Black	SVS
SV4	White	SVS

Refrigerant R410A INVERTER

AIRSTAGE™ VR-IV

Variable Refrigerant Flow System

5. APPENDING DATA (UNIT)

Models: AJ∗072GALBH, AJ∗090GALBH, AJ∗108GALBH, AJ∗126GALBH and AJ∗144GALBH

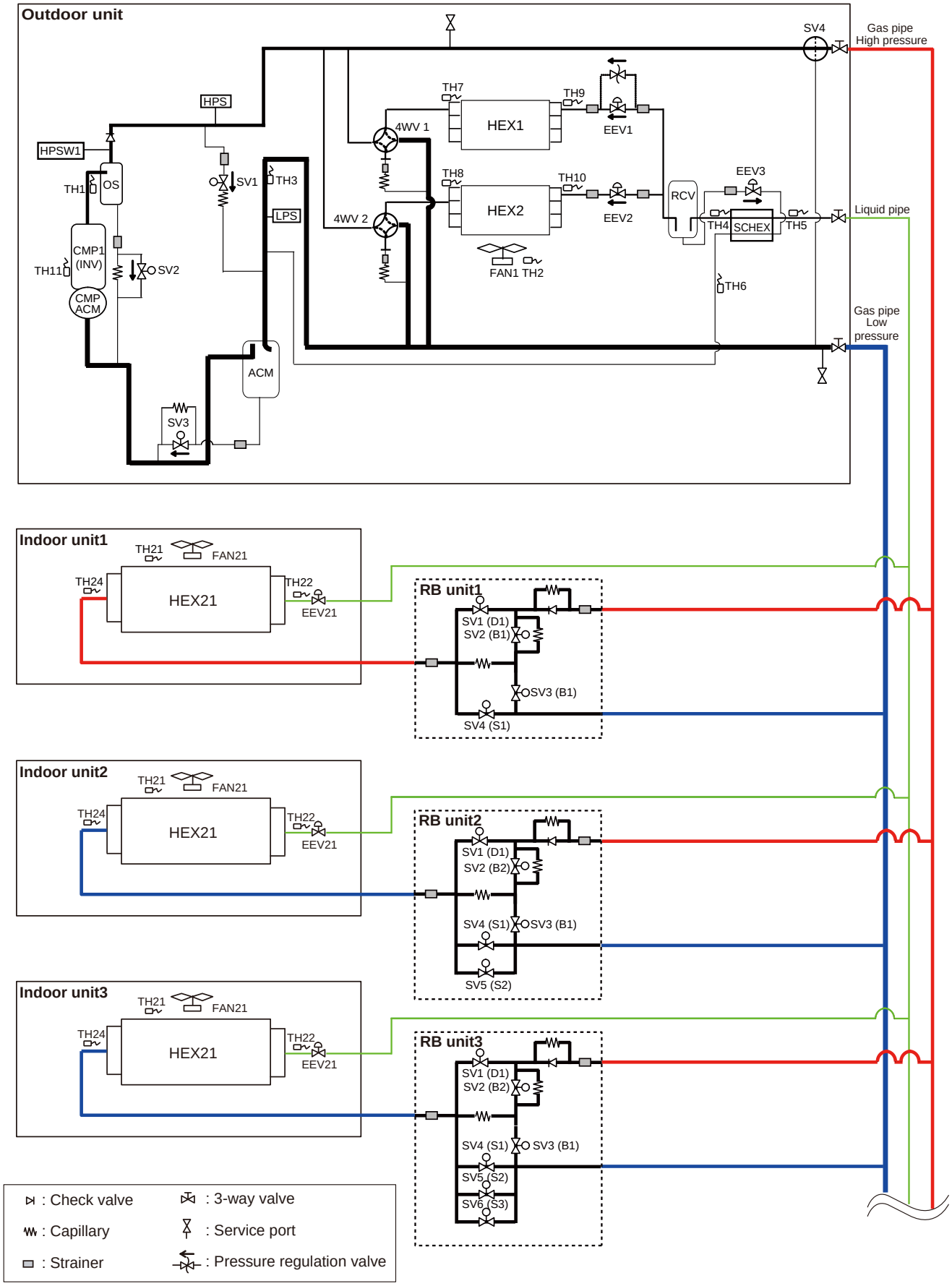

Symbol description

Outdoor unit

MARK	DESCRIPTION
CMP1	Compressor 1 (Inverter type)
HEX1	Heat exchanger 1
HEX2	Heat exchanger 2
FAN1	Fan 1
ACM	Accumulator
RCV	Receiver tanker
OS	Oil separator
SCHEX	Sub-cool heat exchanger
HPS	High pressure sensor
LPS	Low pressure sensor
HPSW1	High pressure sensor switch 1
4WV1	4-way valve 1
4WV2	4-way valve 2
EEV1	Electric expansion valve 1
EEV2	Electric expansion valve 2
EEV3	Electric expansion valve 3
SV1	Solenoid valve 1
SV2	Solenoid valve 2
SV3	Solenoid valve 3
SV4	Solenoid valve 4
TH1	Discharge temperature thermistor 1
TH2	Outdoor temperature thermistor
TH3	Suction temperature thermistor
TH4	Liquid temperature thermistor 1
TH5	Liquid temperature thermistor 2
TH6	Sub-cool heat exchanger (outlet) thermistor
TH7	Heat exchanger 1 gas thermistor
TH8	Heat exchanger 2 gas thermistor
TH9	Heat exchanger 1 liquid thermistor
TH10	Heat exchanger 2 liquid thermistor
TH11	Compressor 1 temperature thermistor 1

Marking color
BLUE
–
RED
WHITE
BROWN
GREEN
BLACK
YELLOW
PINK
GRAY
ORANGE

Indoor unit

MARK	DESCRIPTION
HEX21	Heat exchanger
FAN21	Fan
EEV21	Electric expansion valve
TH21	Room temperature thermistor
TH22	Heat exchanger (inlet) thermistor
TH24	Heat exchanger (outlet) thermistor

RB unit

MARK	DESCRIPTION
SV_{S1}	Solenoid valve (Suction 1)
SV_{S2}	Solenoid valve (Suction 2)
SV_{B1}	Solenoid valve (Bypass 1)
SV_{B2}	Solenoid valve (Bypass 2)
SV_{D1}	Solenoid valve (Discharge 1)

Model : UTP-RX01AH

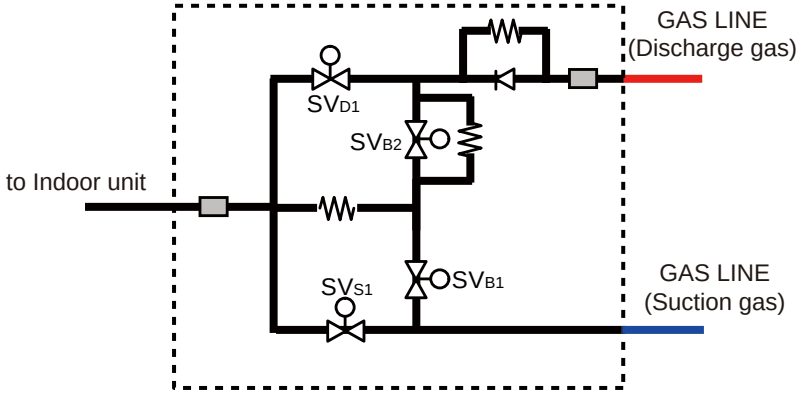

Model : UTP-RX01BH

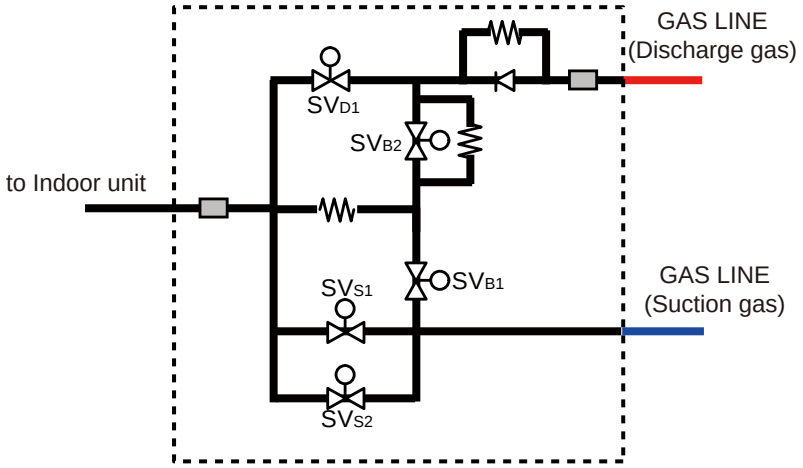

Model : UTP-RX01CH

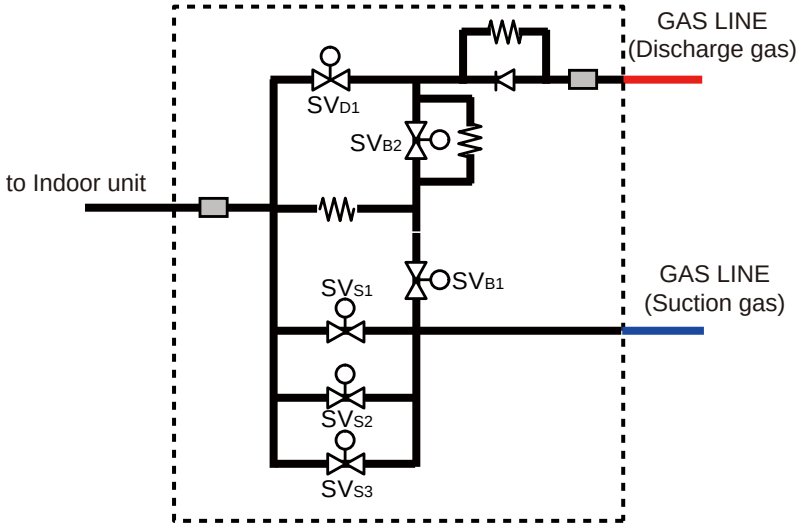

Model : UTP-RX04BH

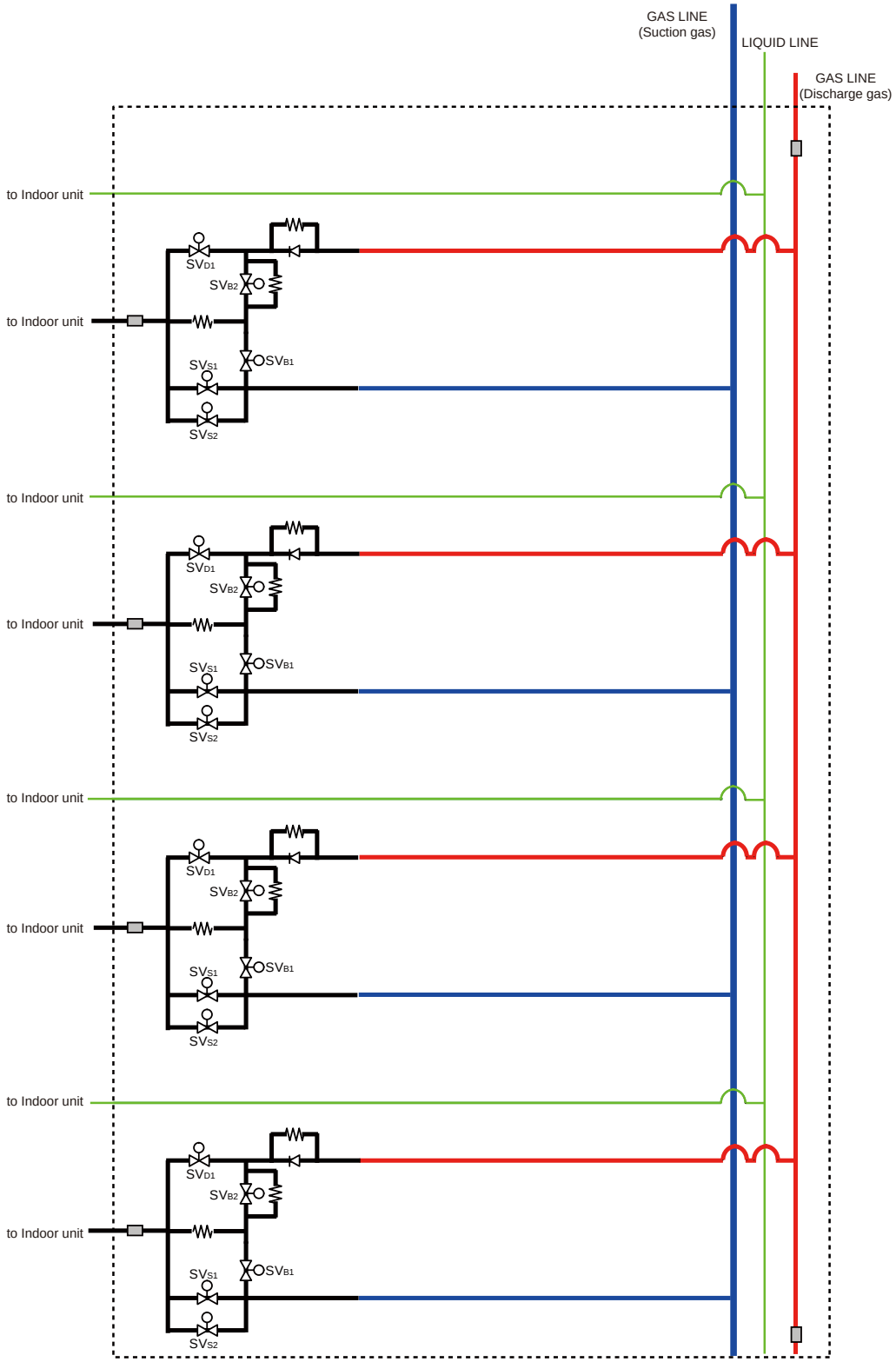

Symbol description

MARK	DESCRIPTION
SV_{S1}	Solenoid valve (Suction 1)
SV_{S2}	Solenoid valve (Suction 2)
SV_{S3}	Solenoid valve (Suction 3)
SV_{B1}	Solenoid valve (Bypass 1)
SV_{B2}	Solenoid valve (Bypass 2)
SV_{D1}	Solenoid valve (Discharge 1)

Model : UTP-RX08AH

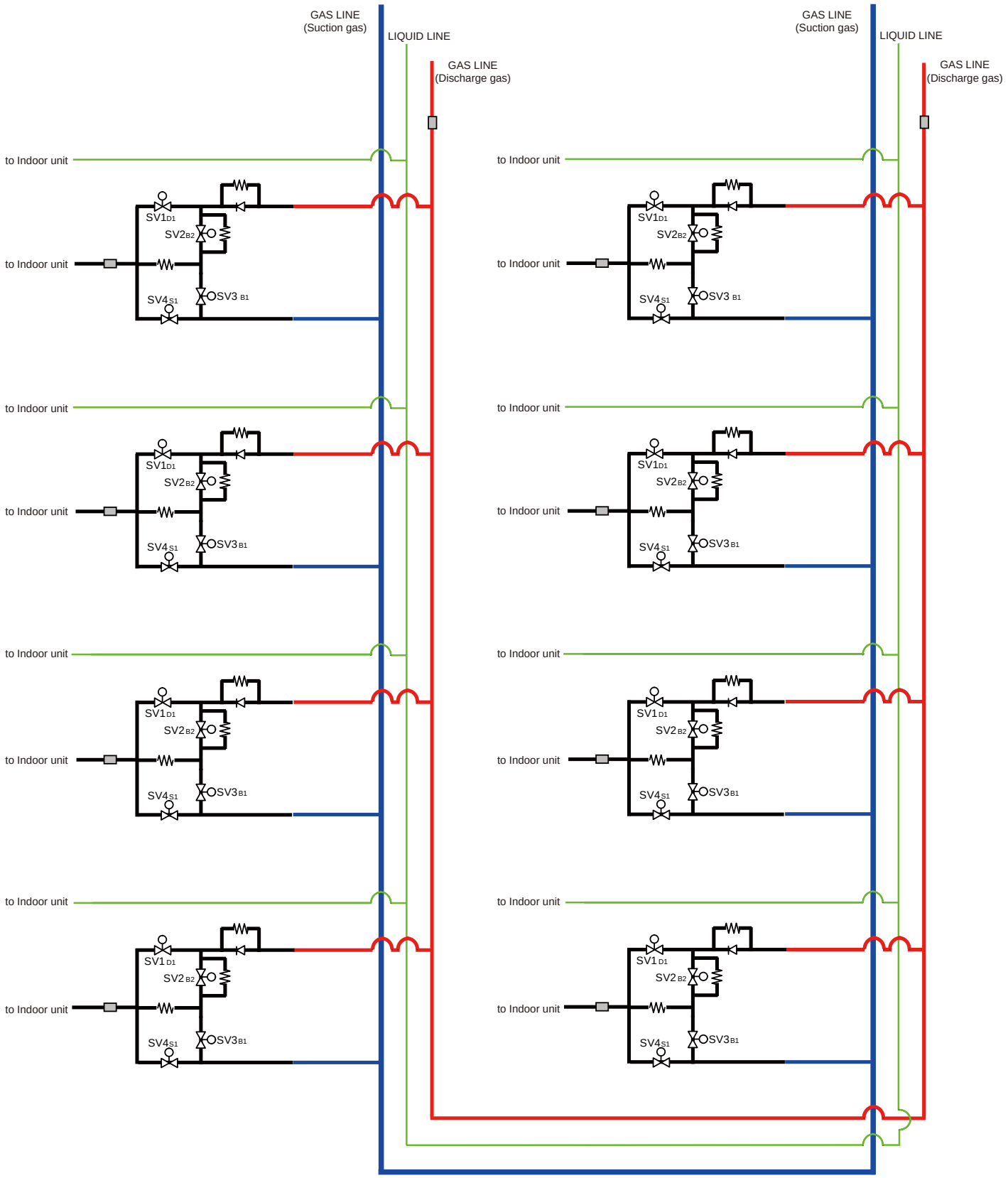

Symbol description

MARK	DESCRIPTION
SV4 S1	Solenoid valve (Suction 1)
SV3 B1	Solenoid valve (Bypass 1)
SV2 B2	Solenoid valve (Bypass 2)
SV1 D1	Solenoid valve (Discharge 1)

Model : UTP-RX12AH

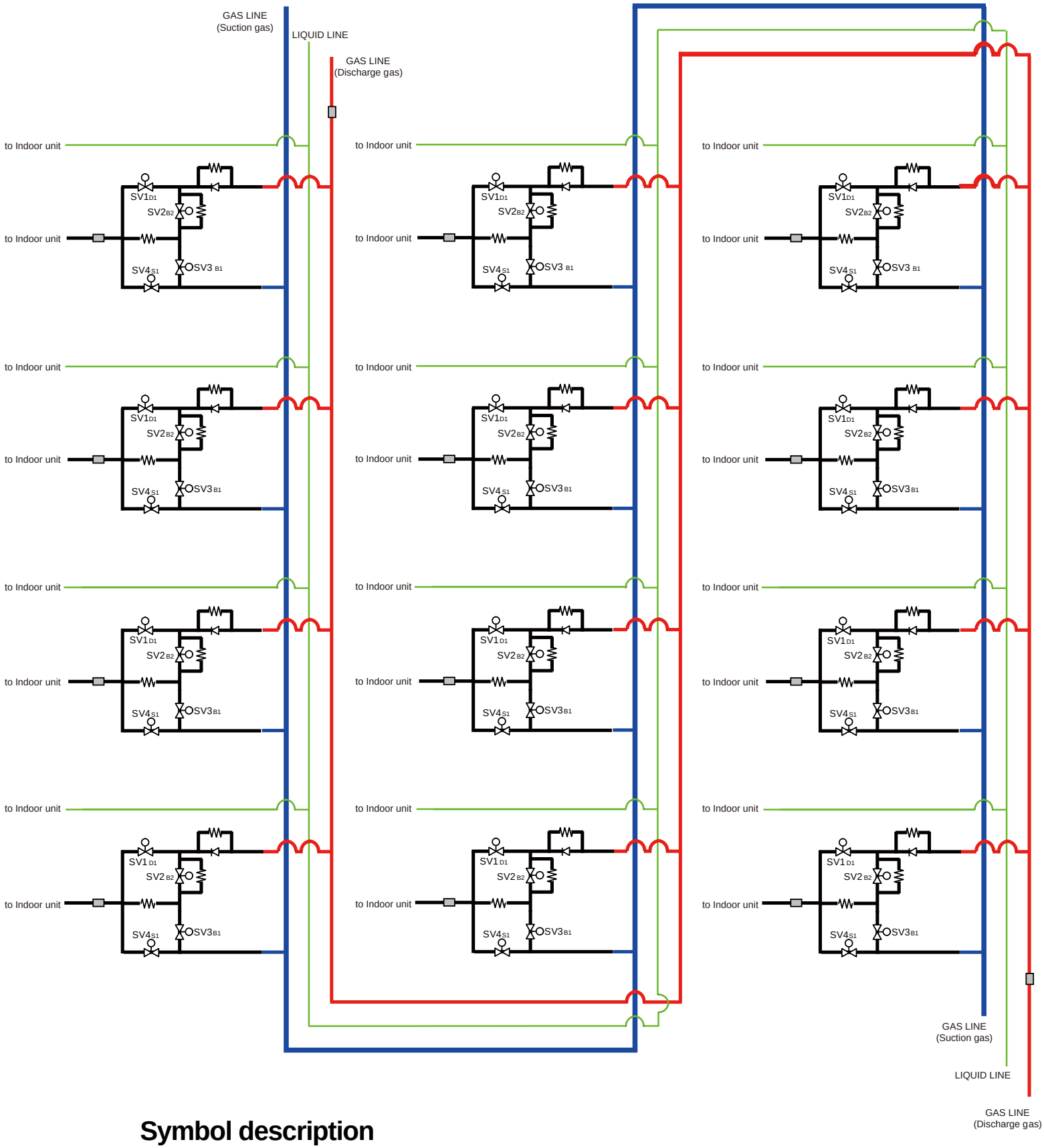

Symbol description

MARK	DESCRIPTION
SV4 S1	Solenoid valve (Suction 1)
SV3 B1	Solenoid valve (Bypass 1)
SV2 B2	Solenoid valve (Bypass 2)
SV1 D1	Solenoid valve (Discharge 1)

5-2-1 Indoor Unit

Compact cassette type

■ Models: AUXB004GLEH, AUXB007GLEH, AUXB009GLEH, AUXB012GLEH, AUXB014GLEH, AUXB018GLEH, and AUXB024GLEH

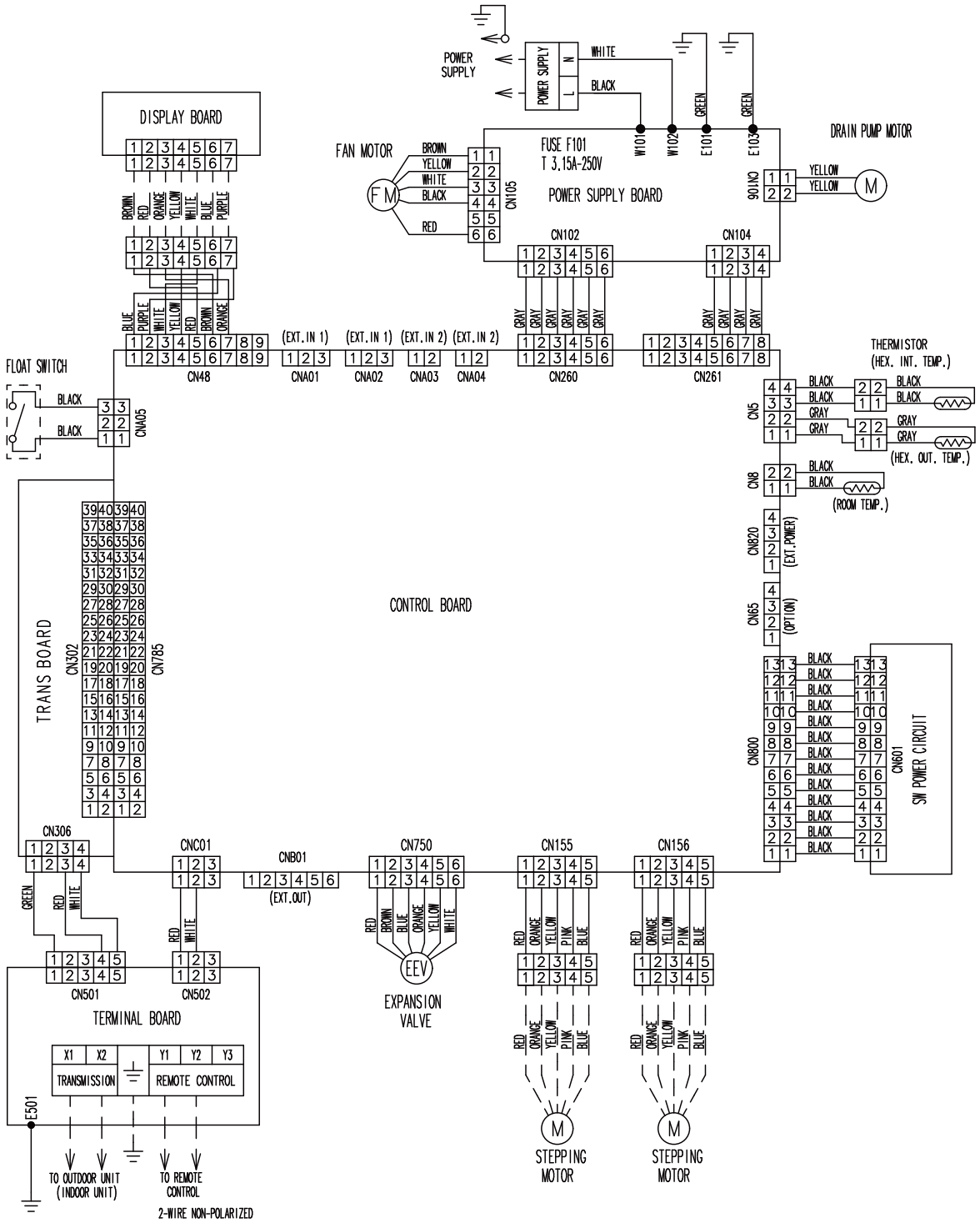

4-way flow cassette type

■ Models: AUXD18GALH, AUXD24GALH, AUXA18GALH, AUXA24GALH, AUXA30GALH, AUXA34GALH, AUXA36GALH, AUXA45GALH, and AUXA54GALH

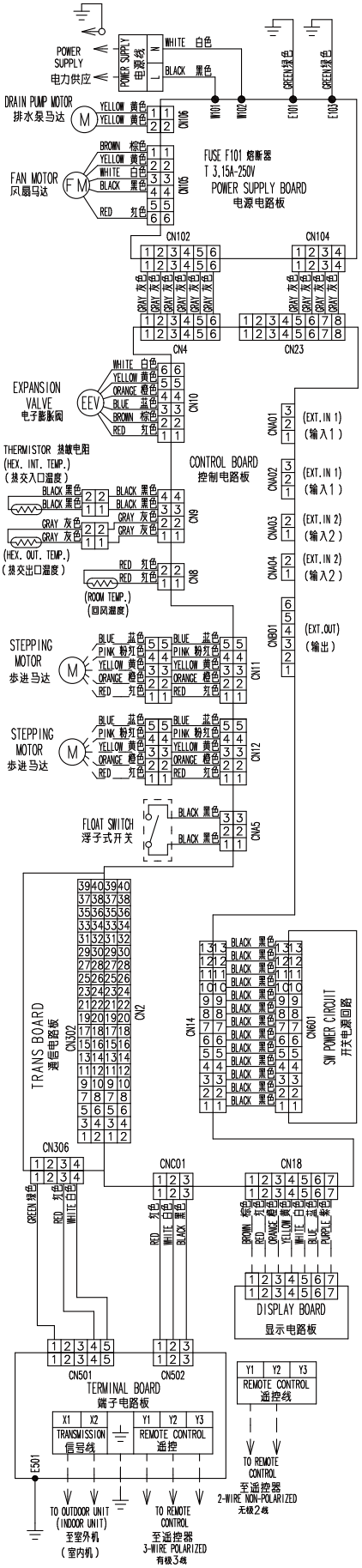

Circular flow cassette type

■ Models: AUXM018GLEH, AUXM024GLEH, AUXM030GLEH, AUXK018GLEH, AUXK024GLEH, AUXK030GLEH, AUXK034GLEH, AUXK036GLEH, AUXK045GLEH, and AUXK054GLEH

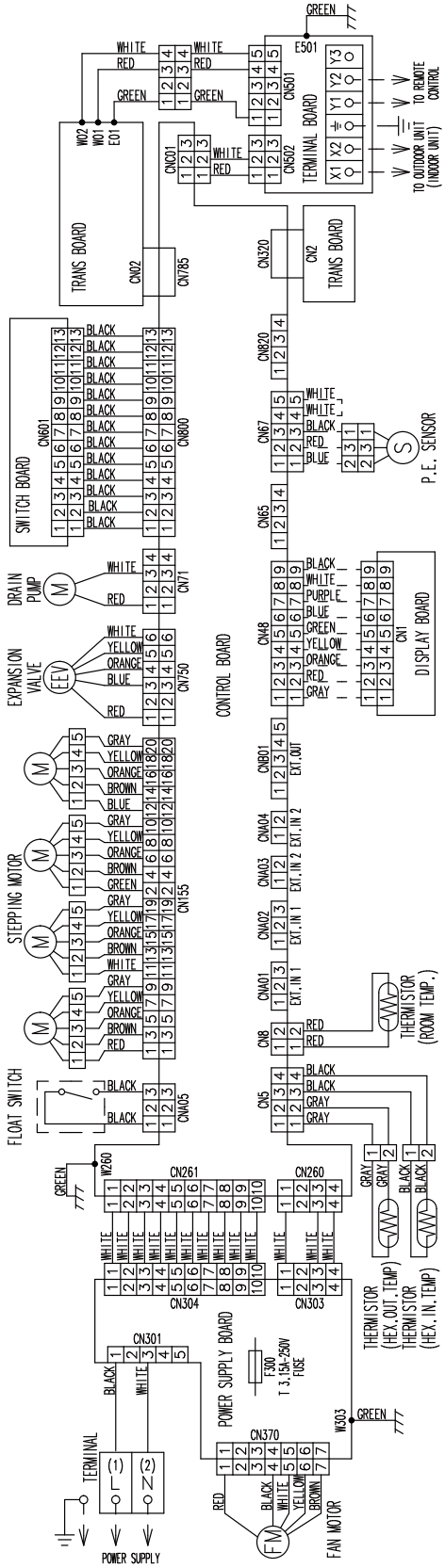

3D flow cassette type

■ Models: AUXS018GLEH and AUXS024GLEH

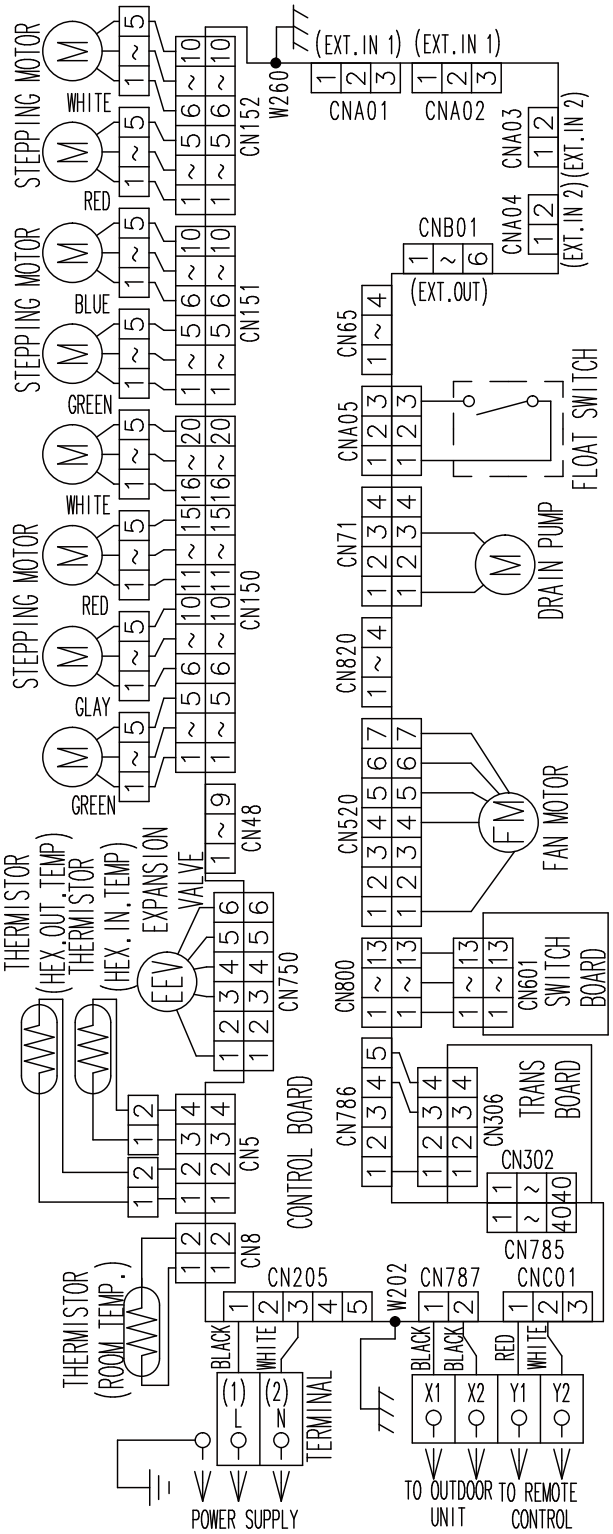

Low static pressure duct (Mini duct) type

■ Models: ARXK004GLGH, ARXK007GLGH, ARXK009GLGH, ARXK012GLGH, ARXK014GLGH, ARXK018GLGH and ARXK024GLGH

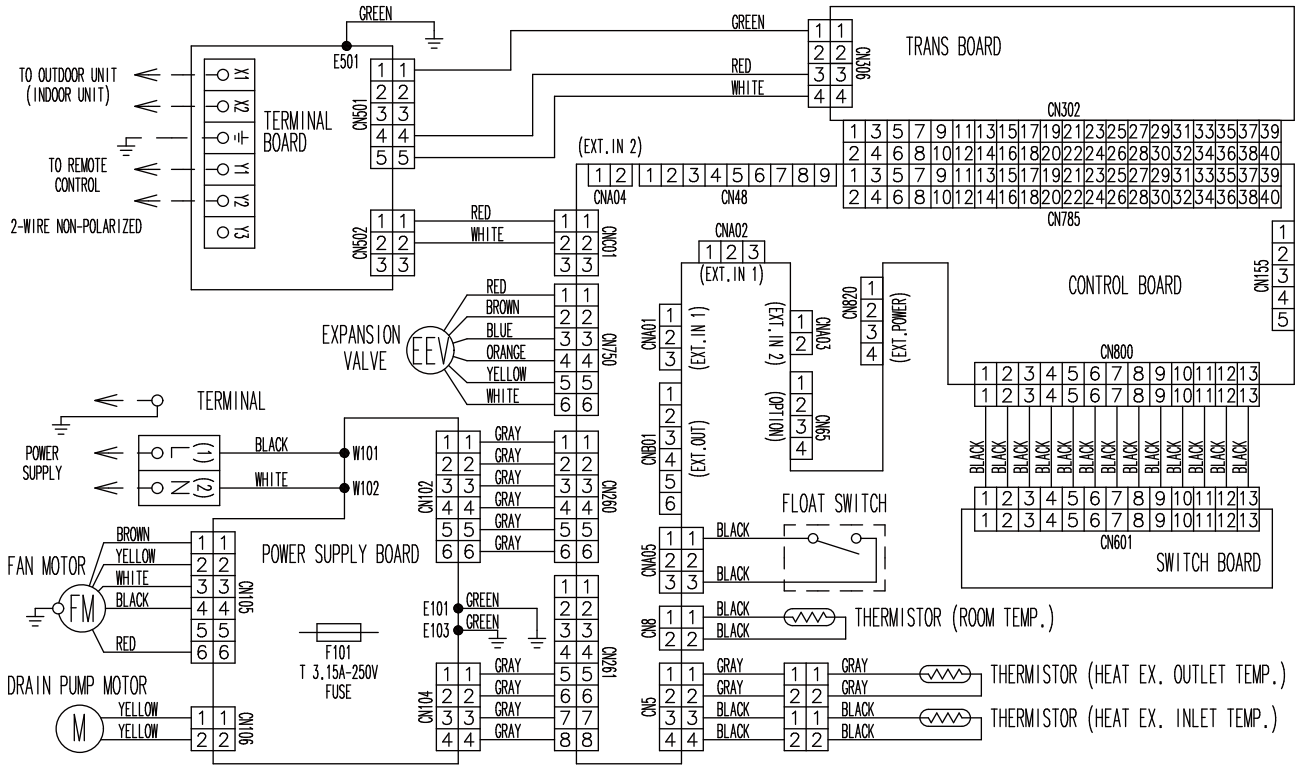

Low static pressure duct (Slim duct)/Slim concealed floor type

■ Models: ARXD007GLEH, ARXD009GLEH, ARXD012GLEH, ARXD014GLEH, ARXD018GLEH, and ARXD024GLEH

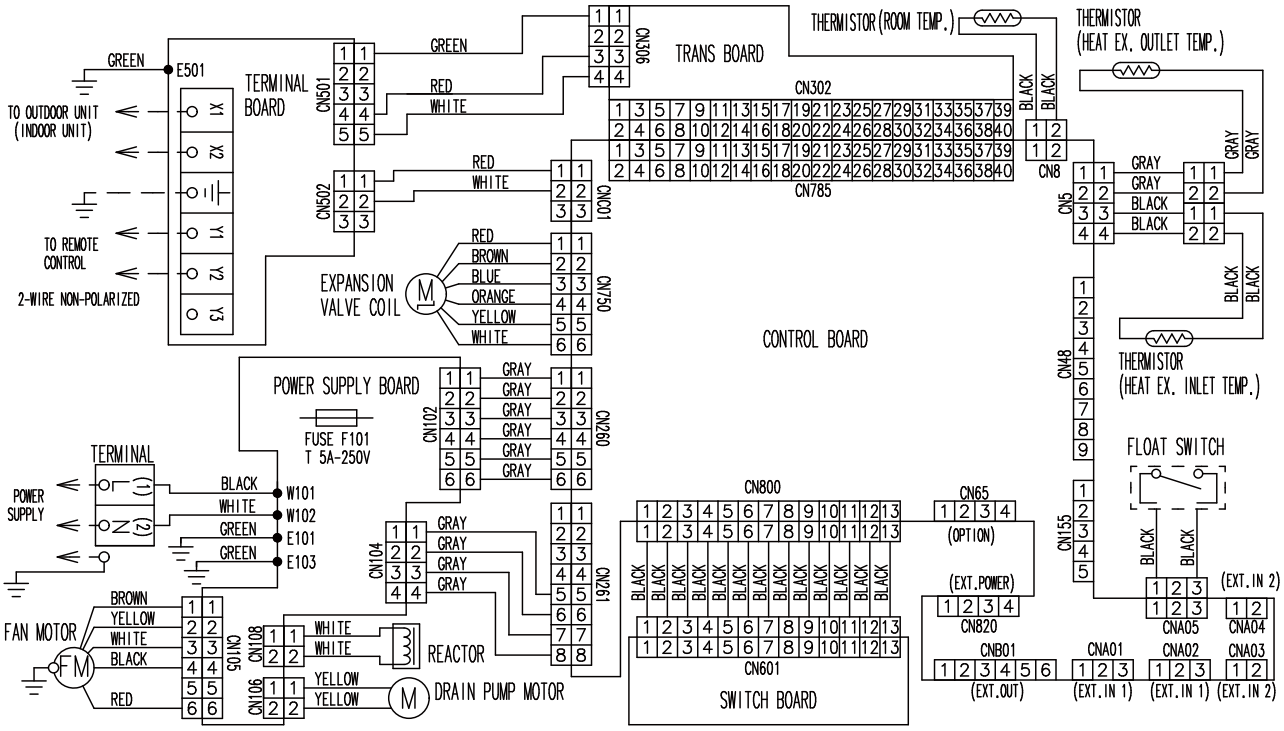

Medium static pressure duct type

■ Models: ARXA024GLEH, ARXA030GLEH, ARXA036GLEH, and ARXA045GLEH

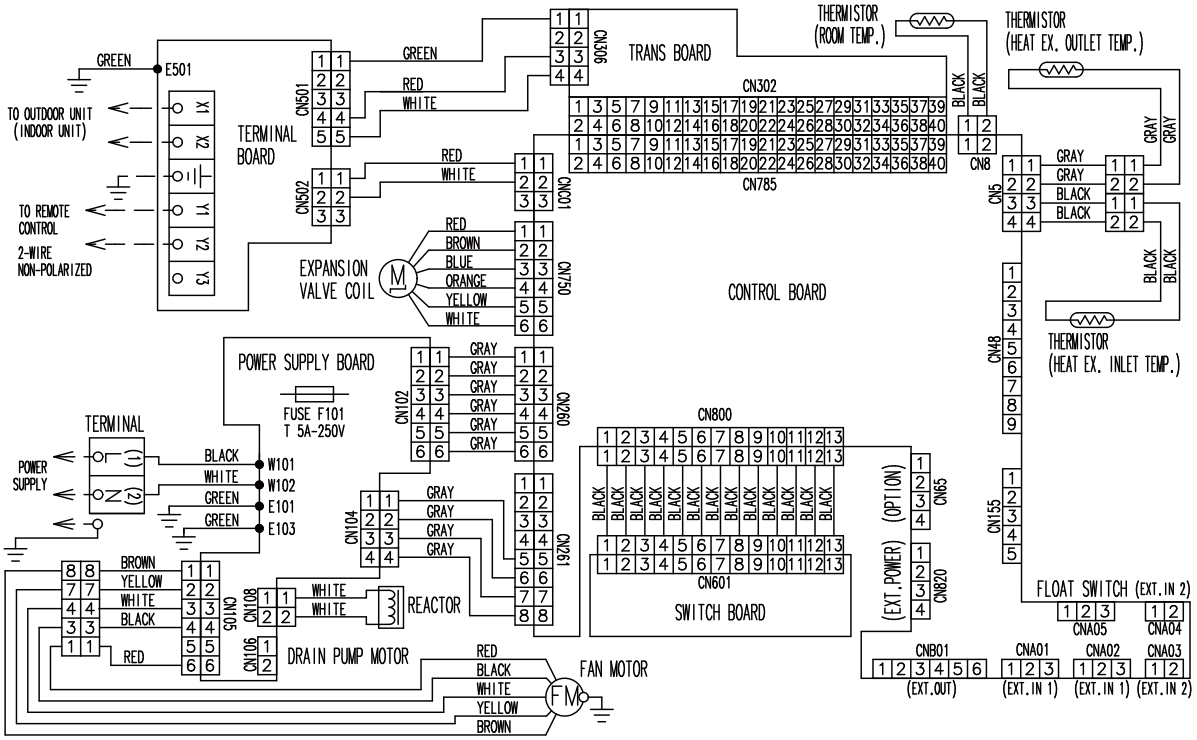

Medium static pressure duct type (High efficiency)

■ Models: ARXQ018GTAH and ARXQ024GTAH

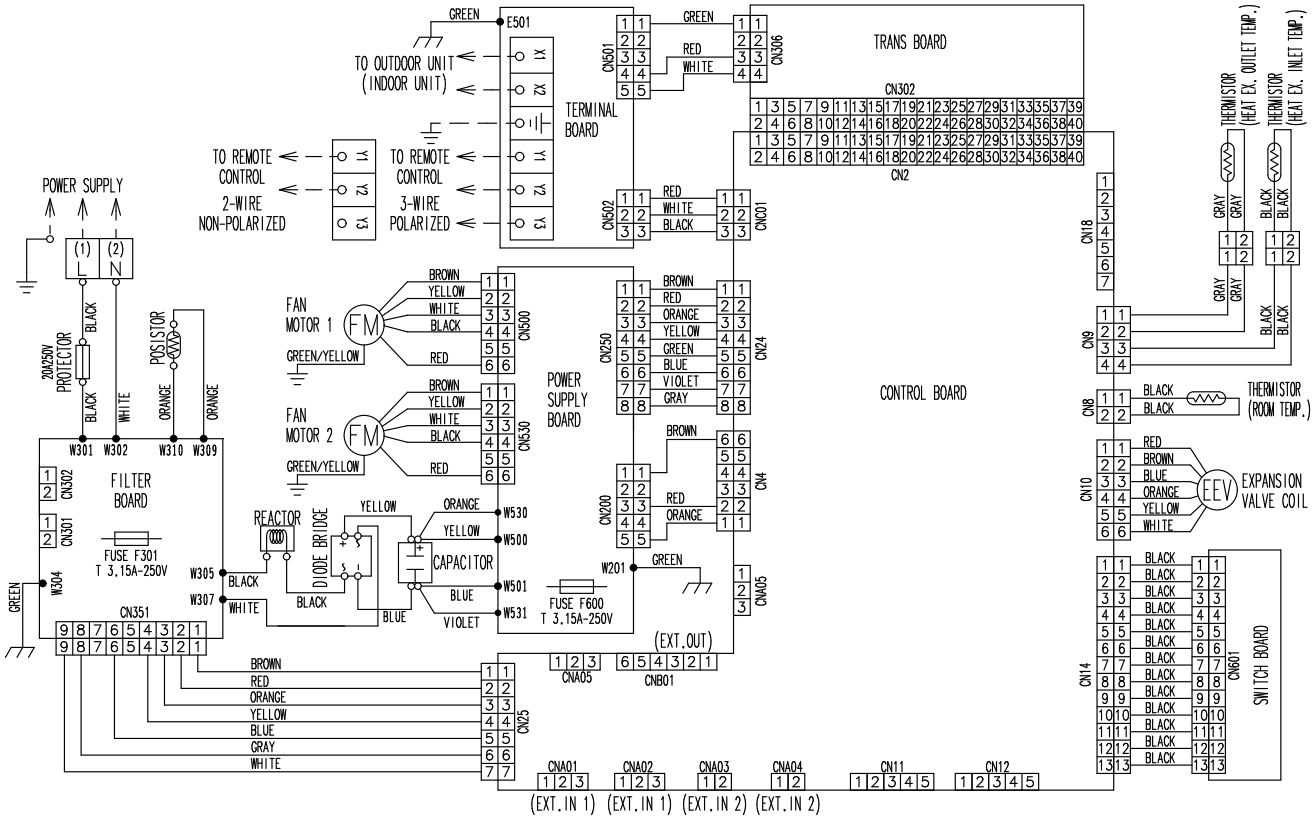

High static pressure duct type

■ Model: ARXC036GTEH

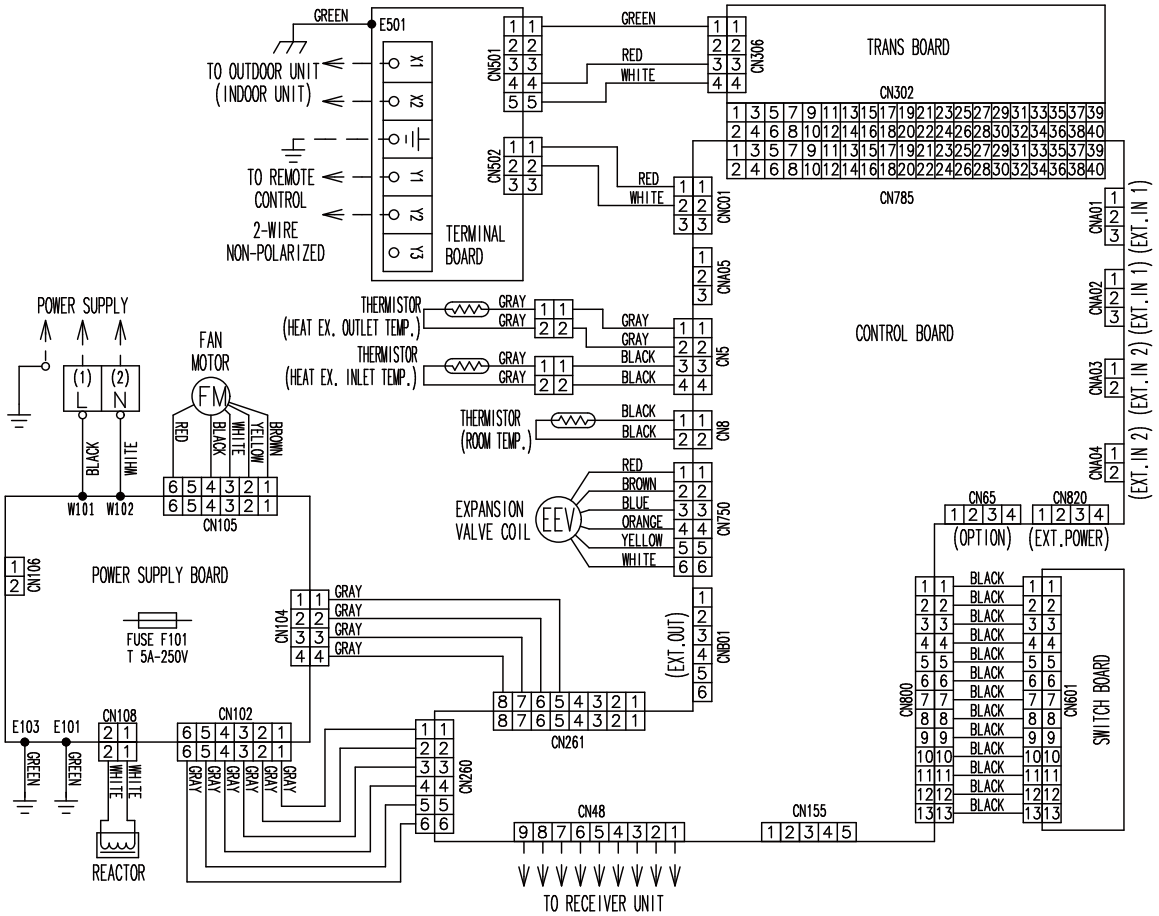

■ Models: ARXC45GATH and ARXC60GATH

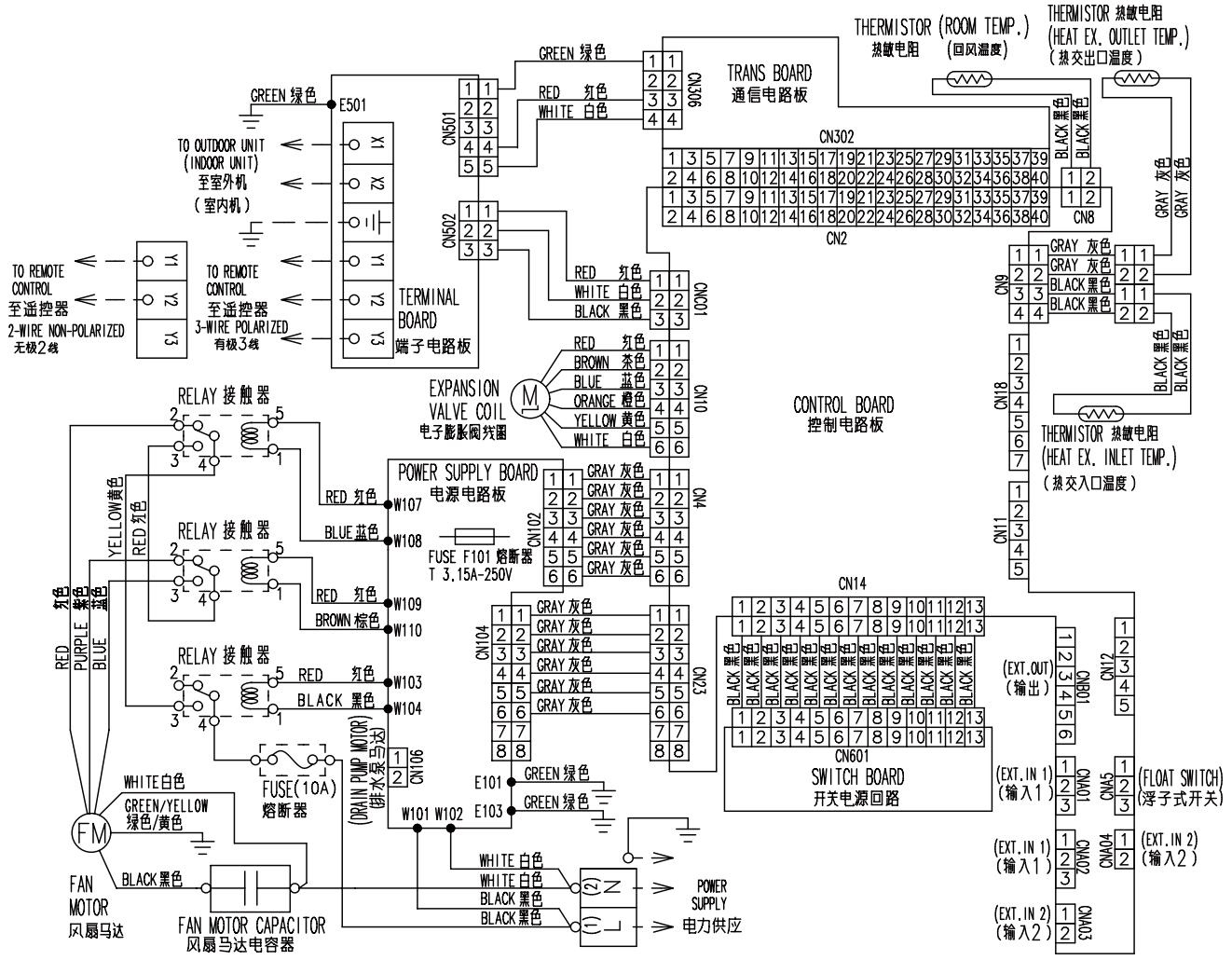

■ Models: ARXC072GTEH, ARXC090GTEH, and ARXC096GTEH

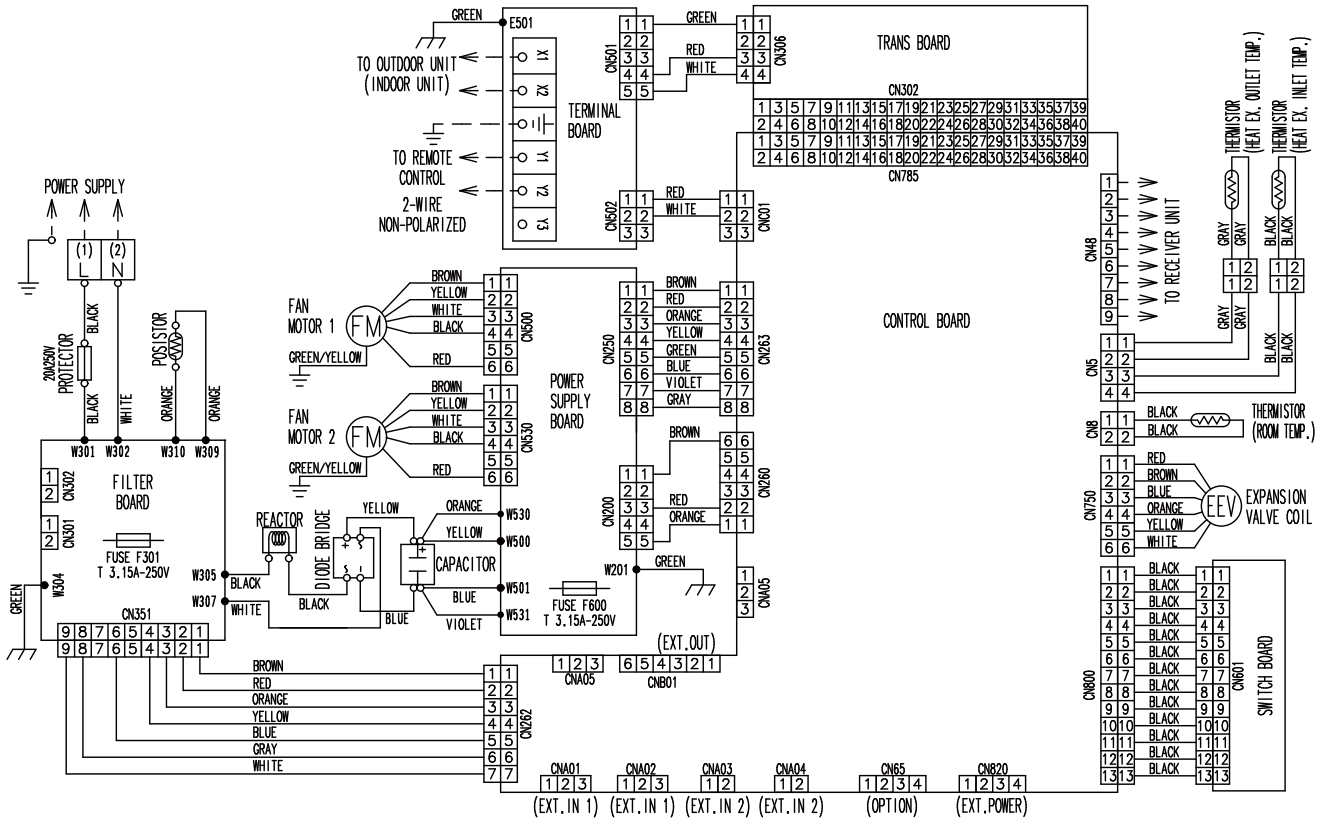

High static pressure duct type (High efficiency)

■ Model: ARXQ030GTAH

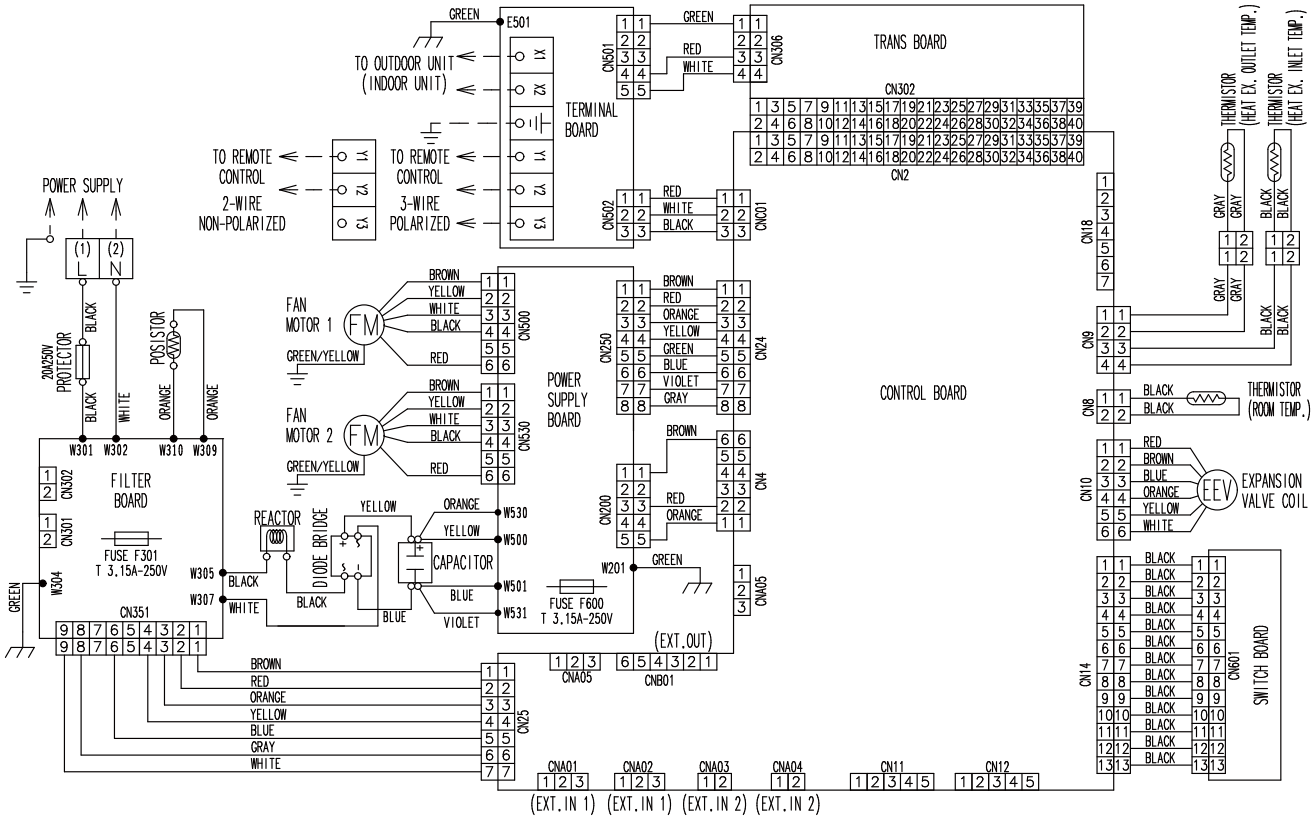

Compact floor type

■ Models: AG∗A004GCGH, AG∗A007GCGH, AG∗A009GCGH, AG∗A012GCGH, and AG∗A014GCGH

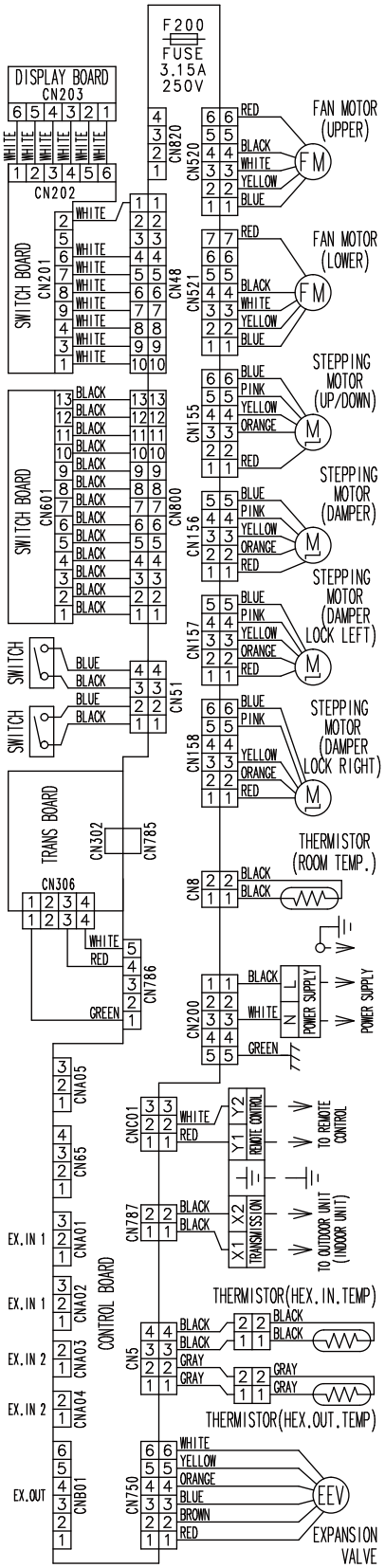

Compact floor type (EEV external model)

■ Models: AG∗E004GCEH, AG∗E007GCEH, AG∗E009GCEH, AG∗E012GCEH, and AG∗E014GCEH

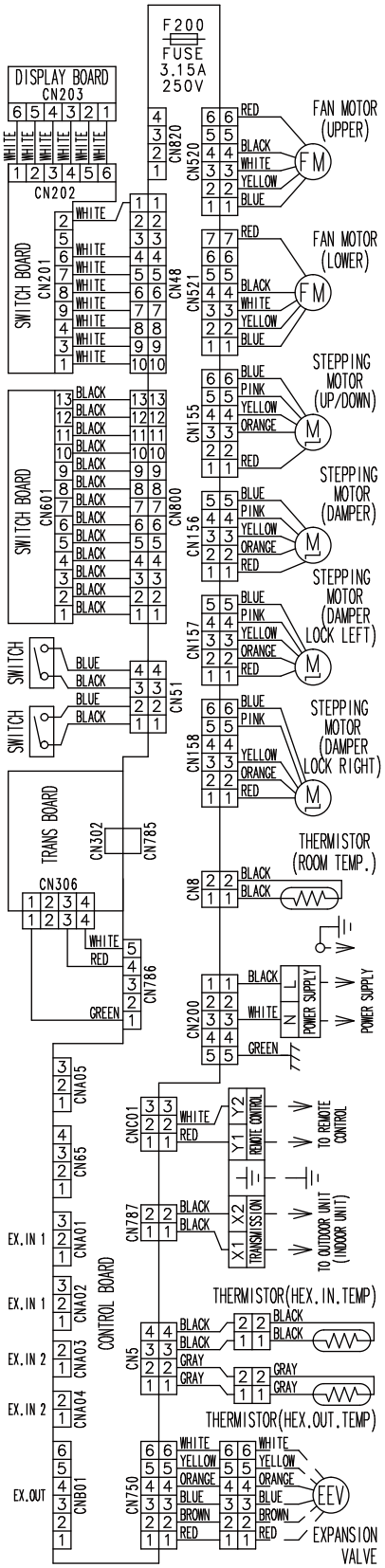

Floor/Ceiling type

■ Models: AB∗A012GTEH, AB∗A014GTEH, AB∗A018GTEH, and AB∗A024GTEH

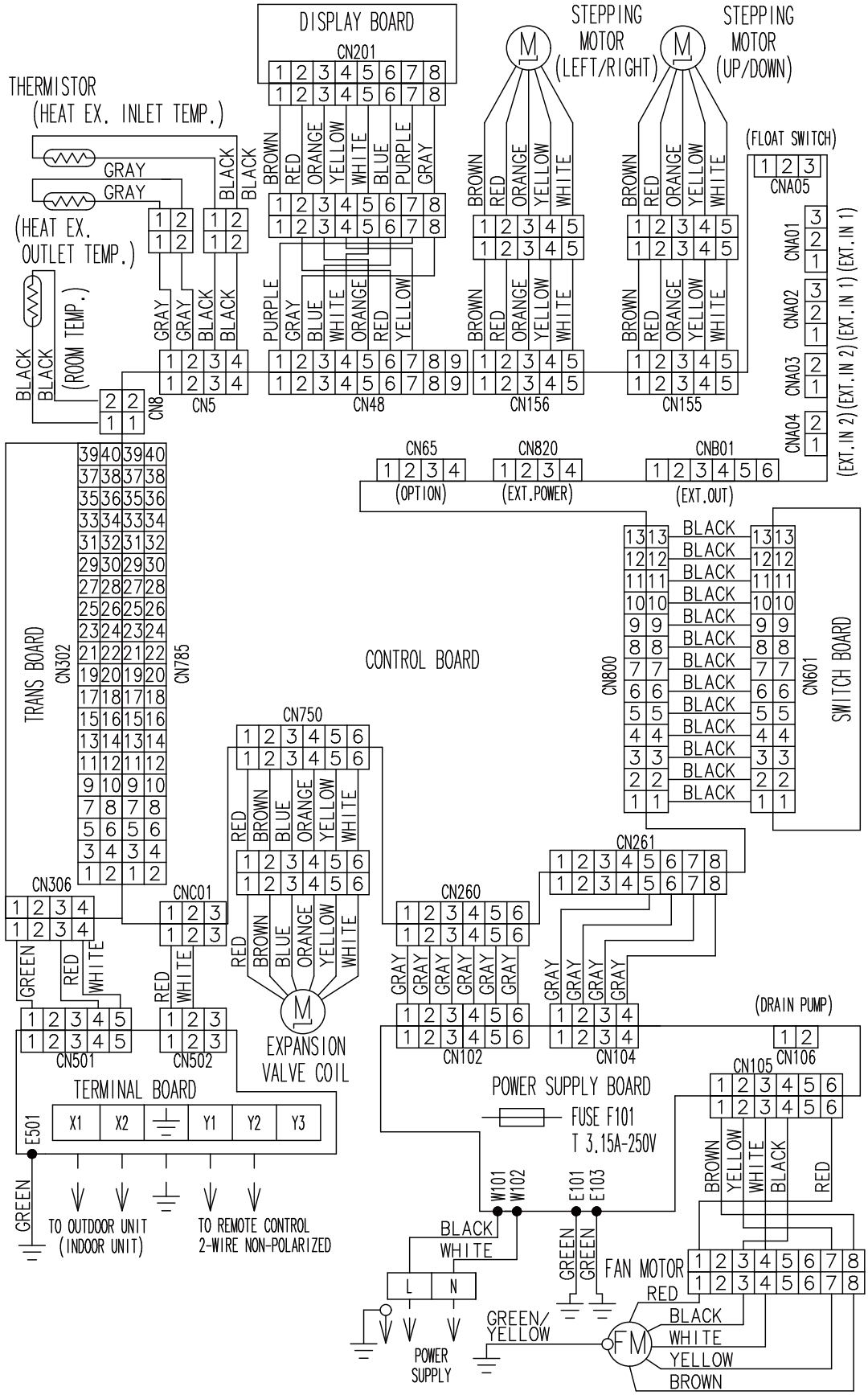

Ceiling type

■ Models: AB∗A030GTEH, AB∗A036GTEH, AB∗A045GTEH, and AB∗A054GTEH

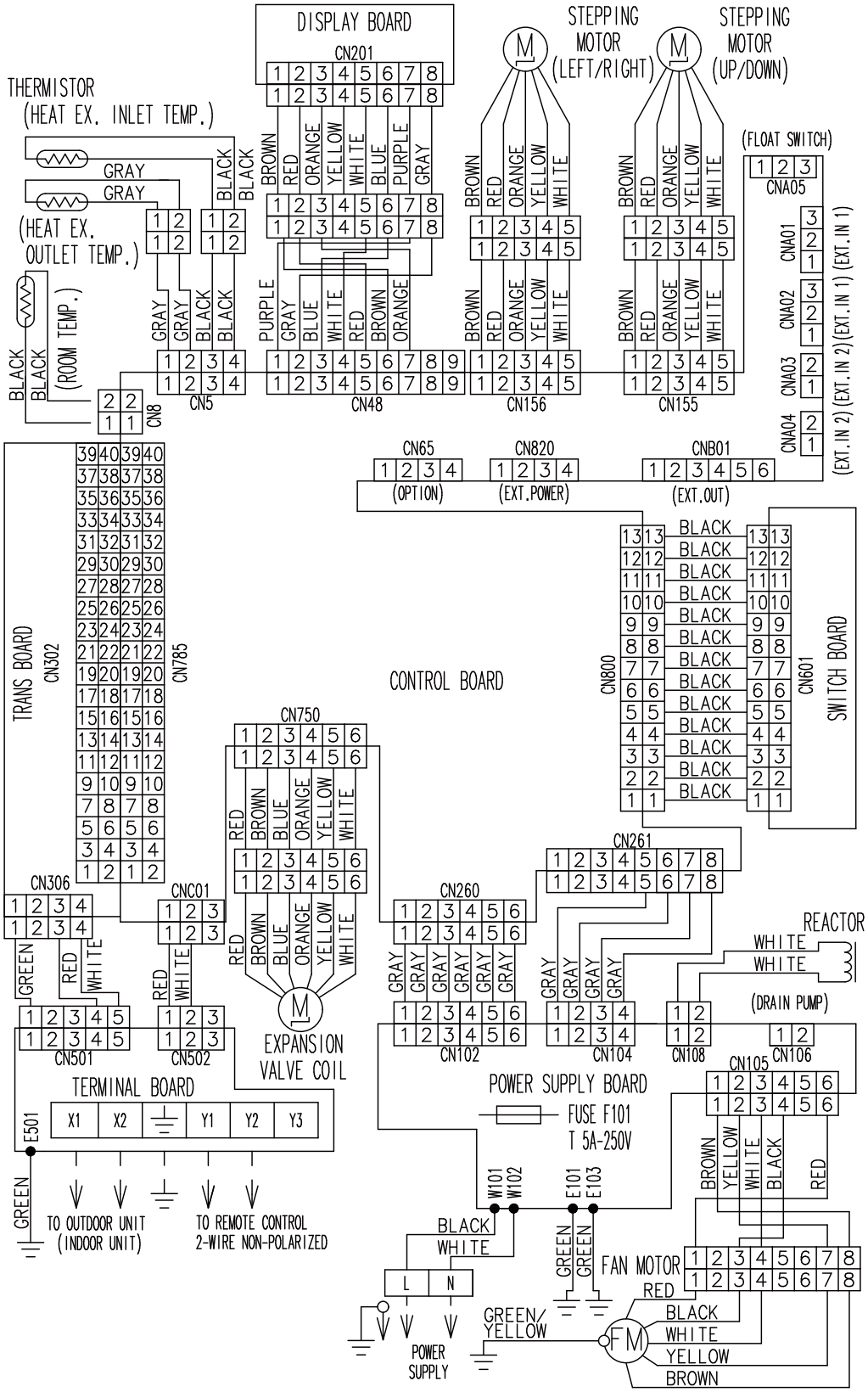

Wall mounted type

■ Models: AS∗A004GCGH, AS∗A007GCGH, AS∗A009GCGH, AS∗A012GCGH , and AS∗A014GCGH

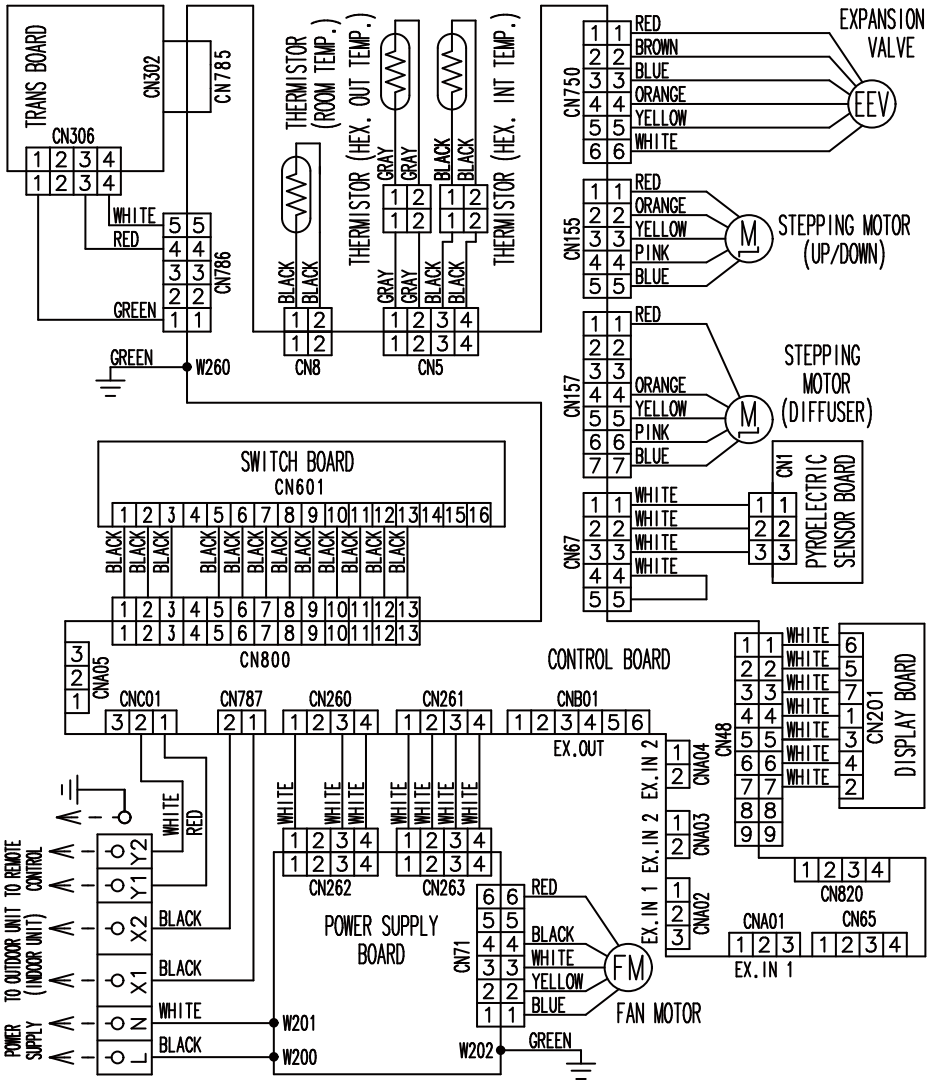

■ Models: AS∗A18GBCH and AS∗A24GBCH

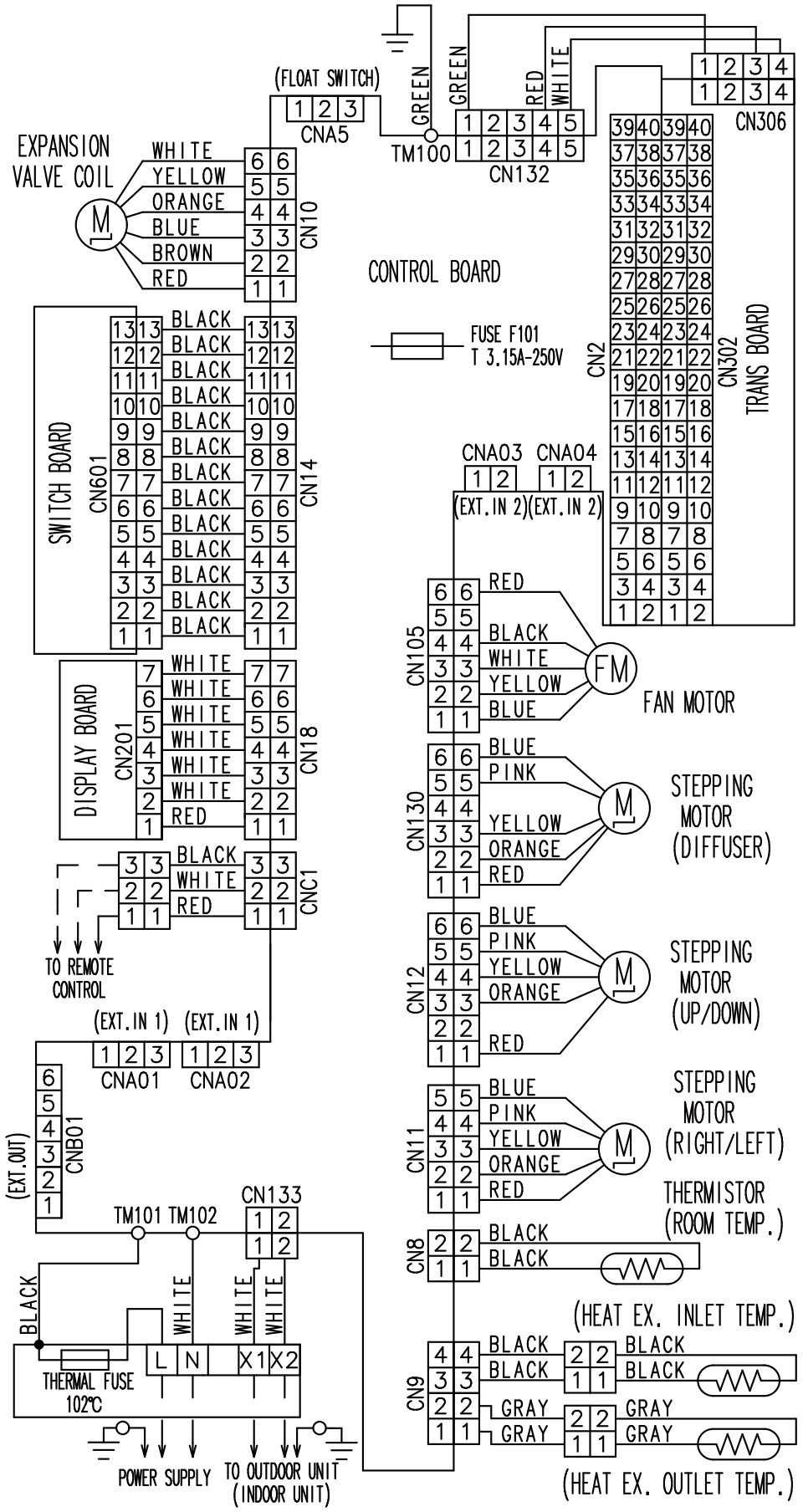

■ Models: AS∗A030GTEH and AS∗A034GTEH

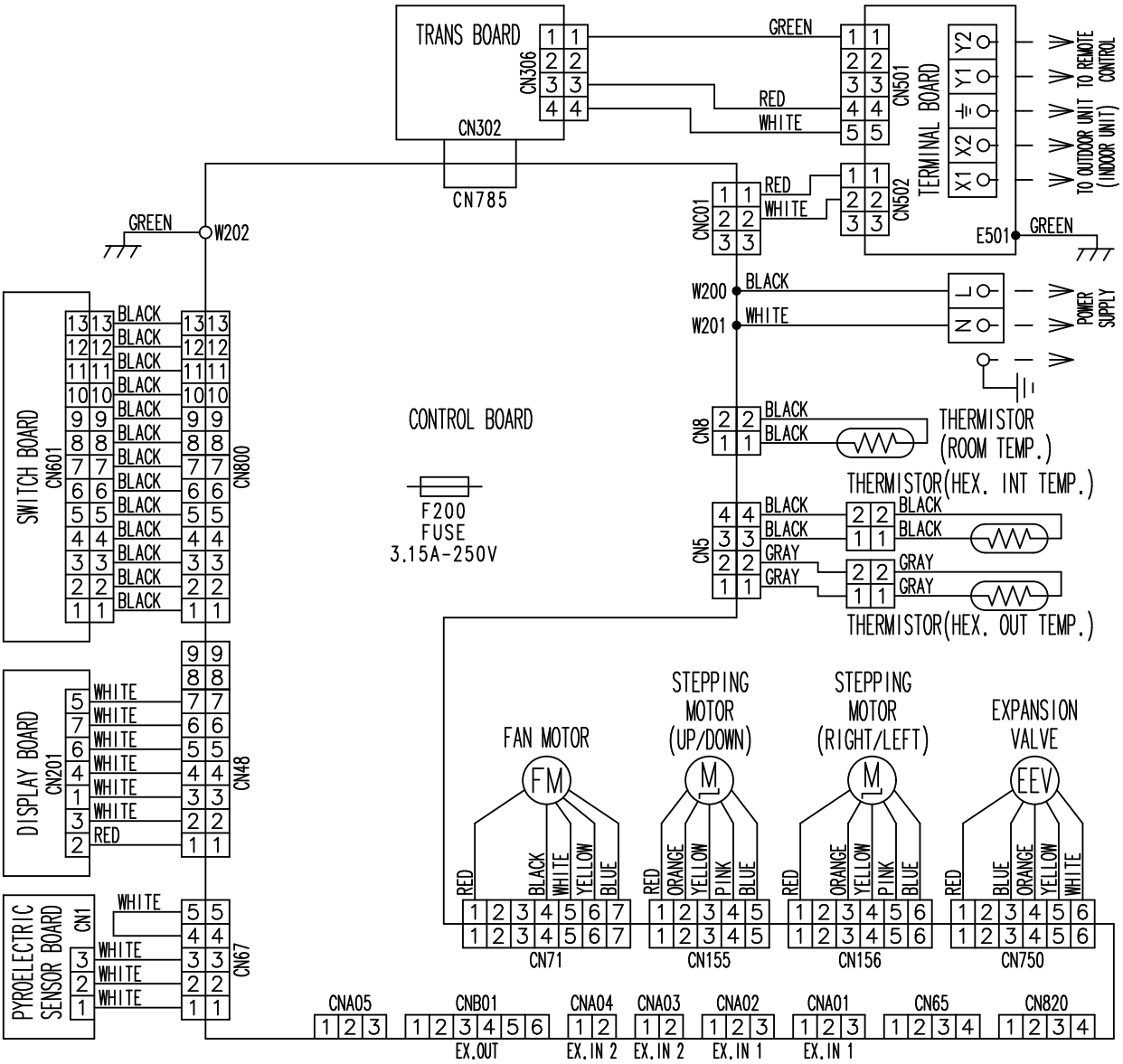

Wall mounted type (EEV external model)

■ Models: AS∗E004GCEH , AS∗E007GCEH , AS∗E009GCEH , AS∗E012GCEH , and AS∗E014GCEH

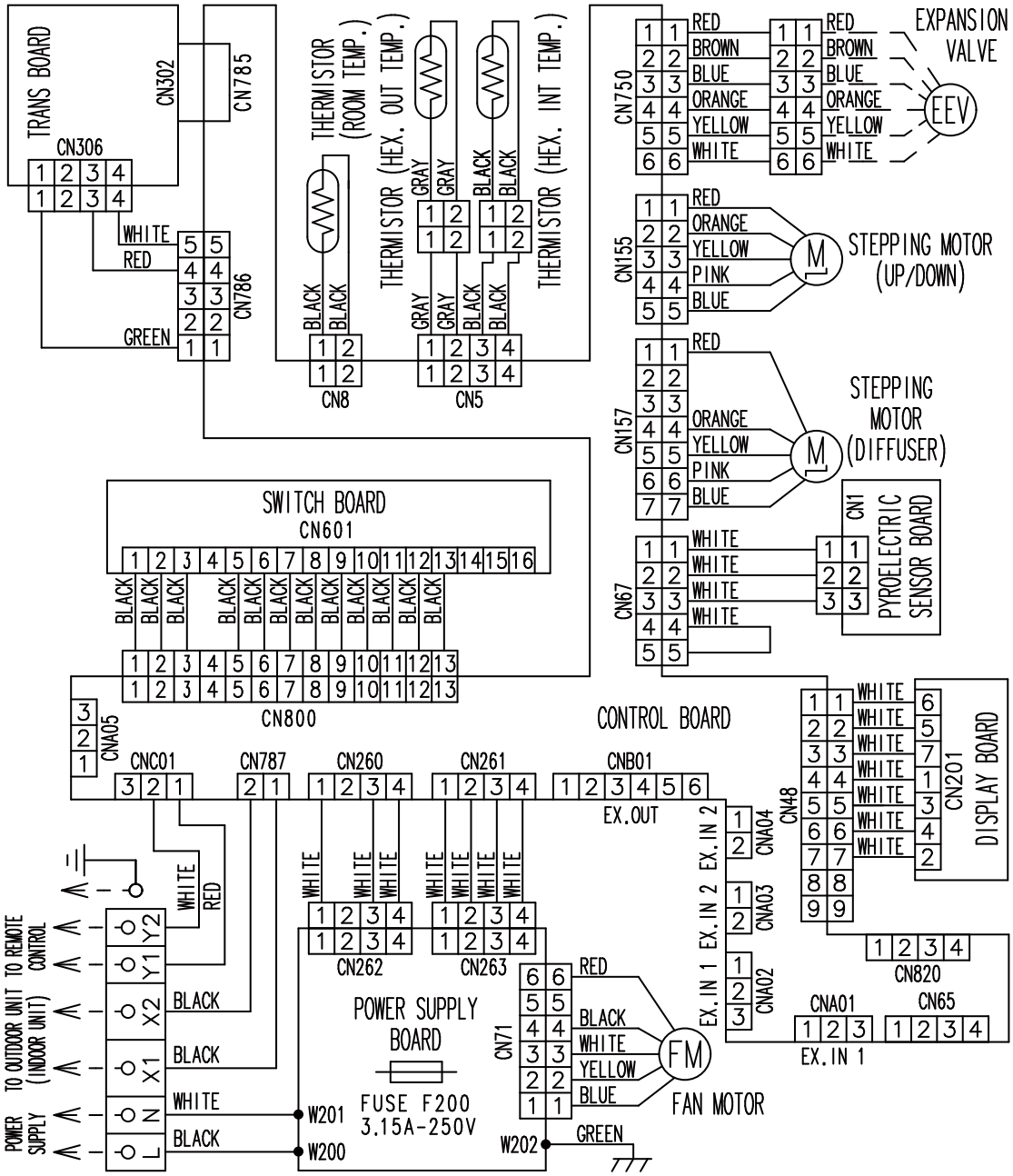

Wiring diagrams

Models: AJ∗072GALBH, AJ∗090GALBH, and AJ∗108GALBH

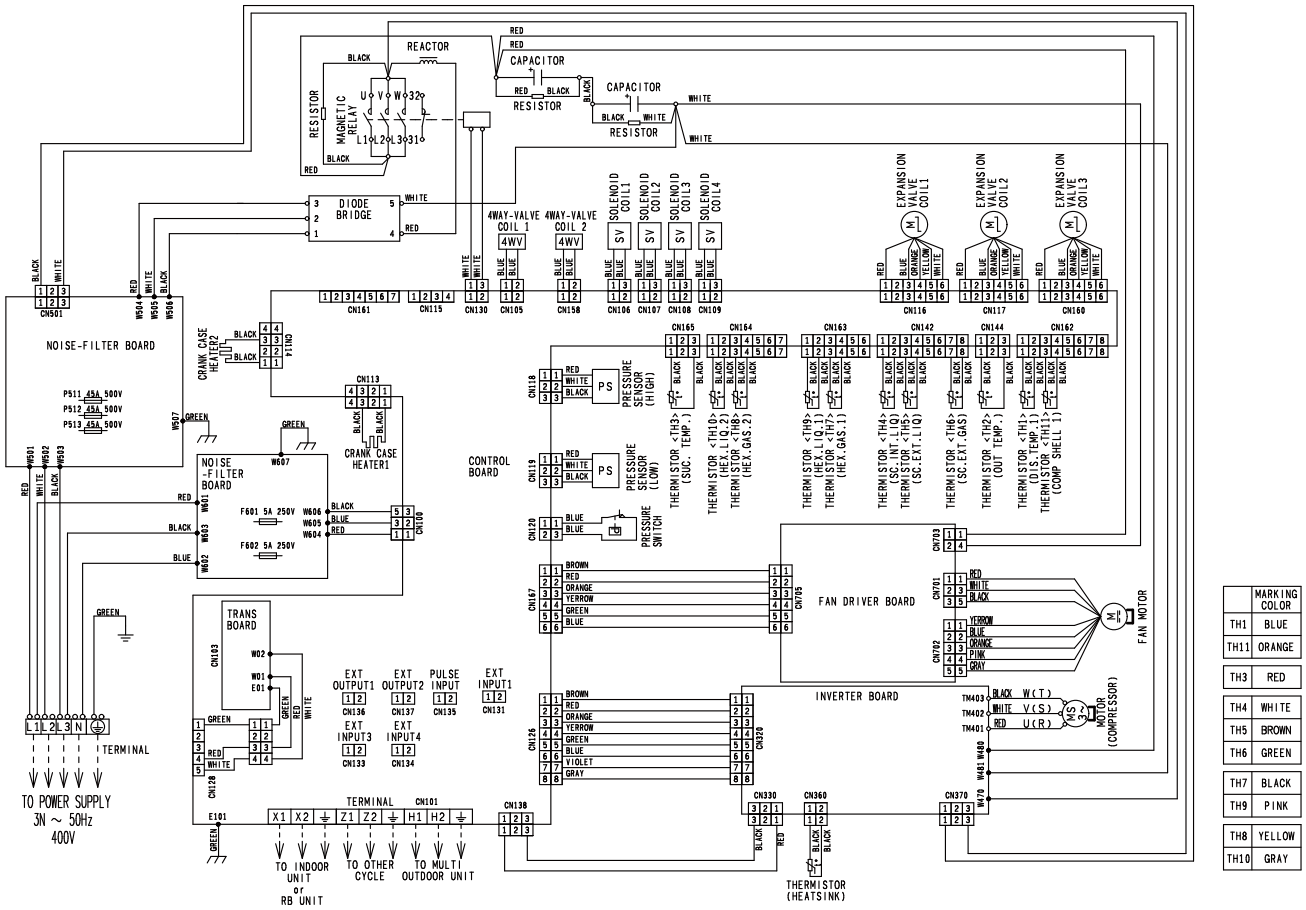

NOTE:
- X1 and X2: To be connected to indoor unit or RB unit
- Z1 and Z2: To be connected to other master outdoor unit
- H1 and H2: To be connected to outdoor unit within same refrigerant system

Models: AJ∗126GALBH and AJ∗144GALBH

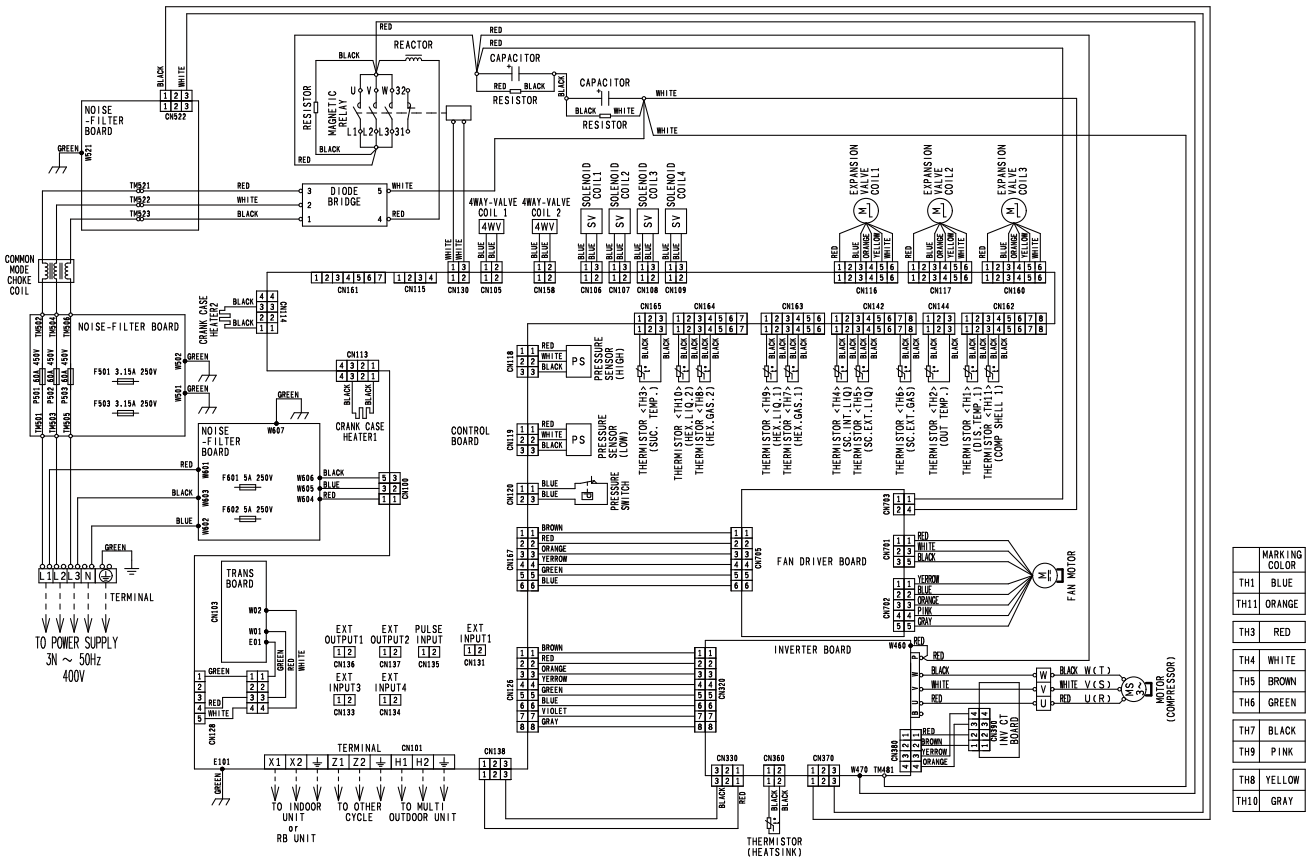

NOTE:
- X1 and X2: To be connected to indoor unit or RB unit
- Z1 and Z2: To be connected to other master outdoor unit
- H1 and H2: To be connected to outdoor unit within same refrigerant system

5-2-3 RB Unit

Model : UTP-RX01AH

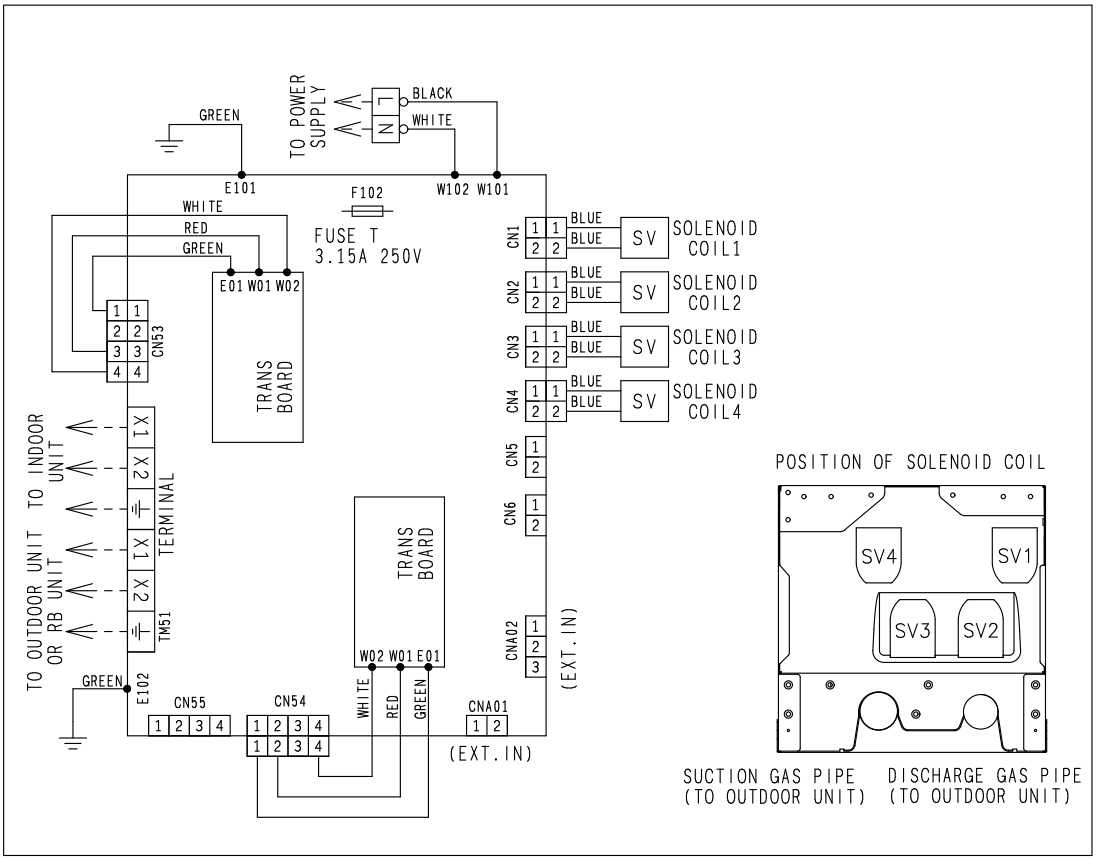

Model : UTP-RX01BH

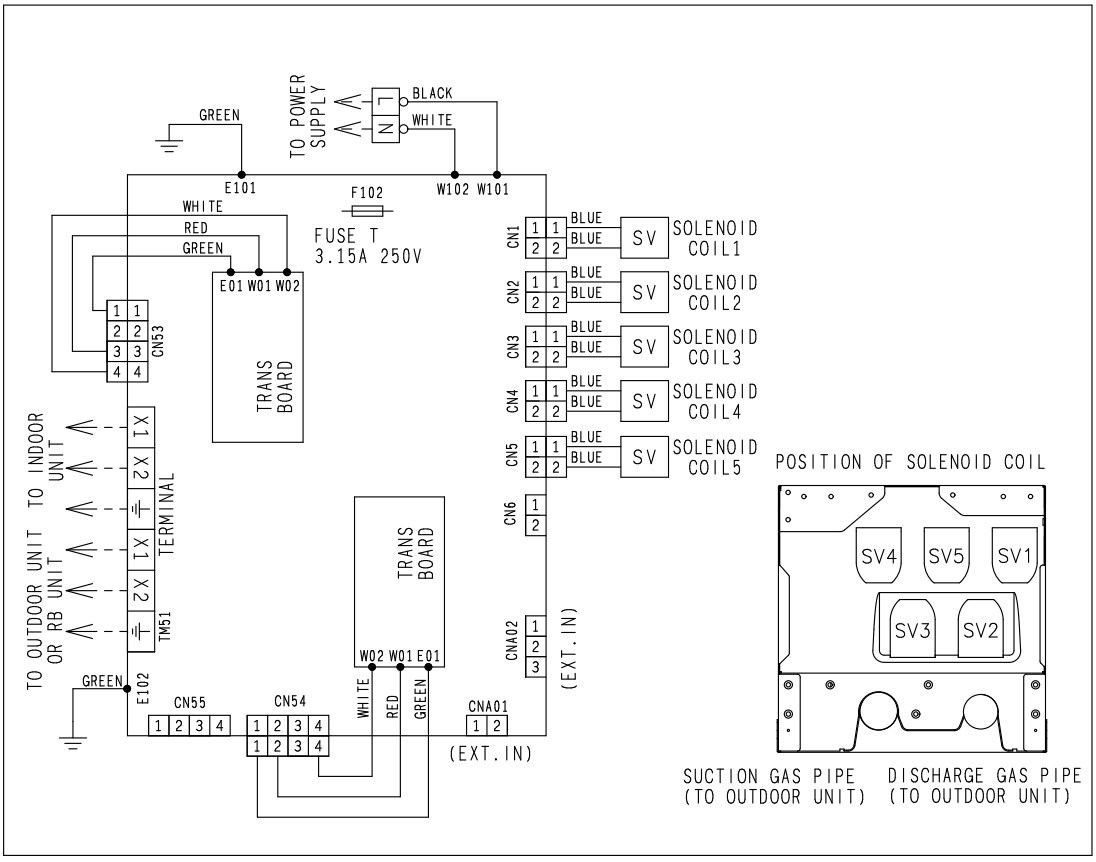

Model : UTP-RX01CH

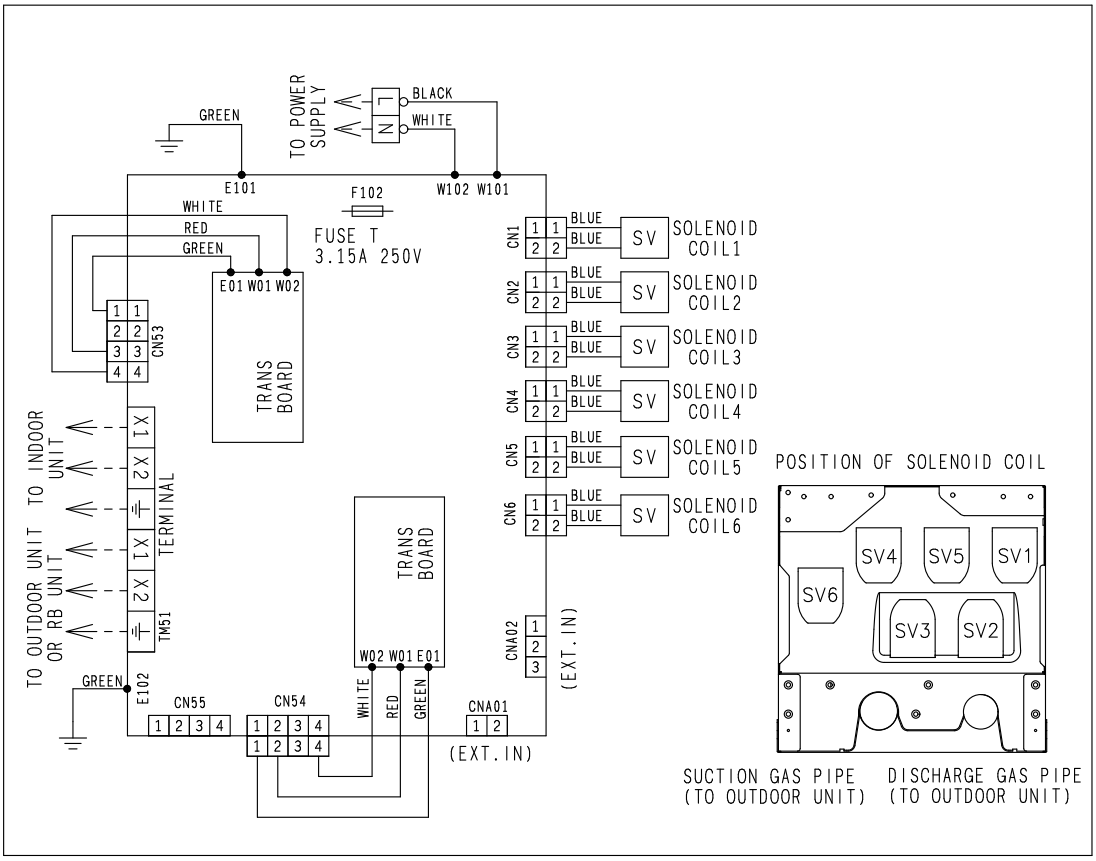

Model : UTP-RX04BH

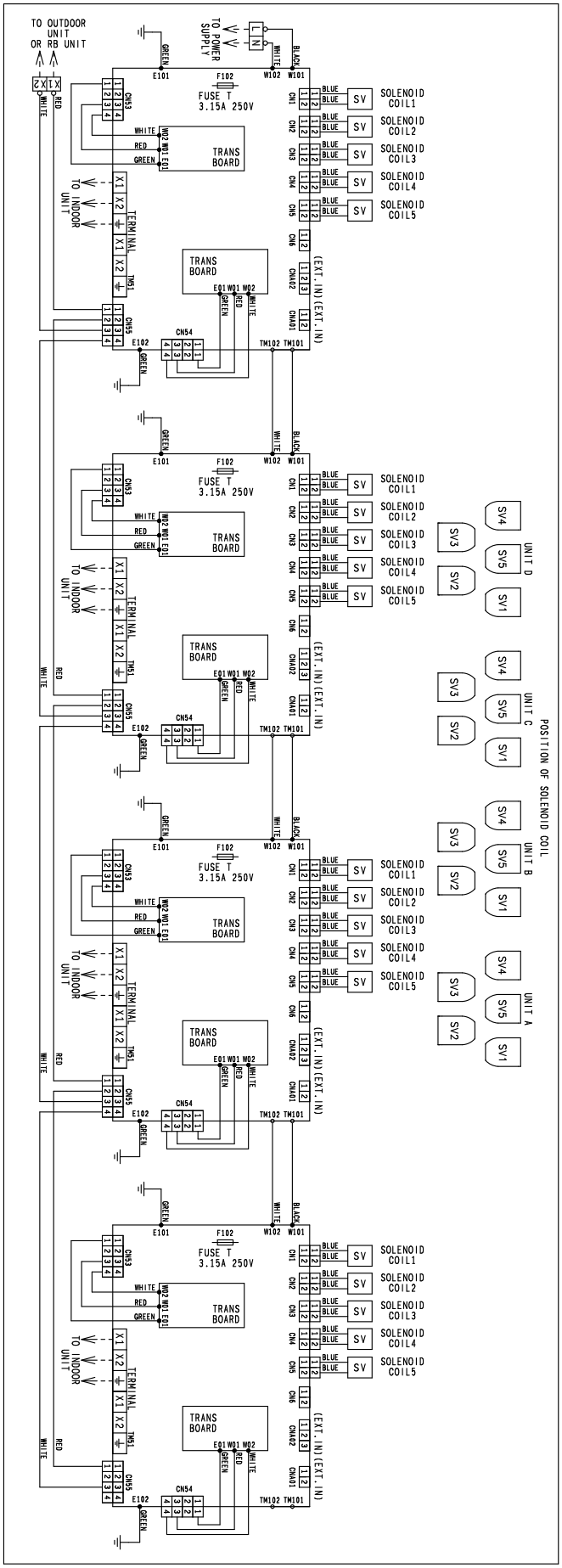

Model : UTP-RX08AH

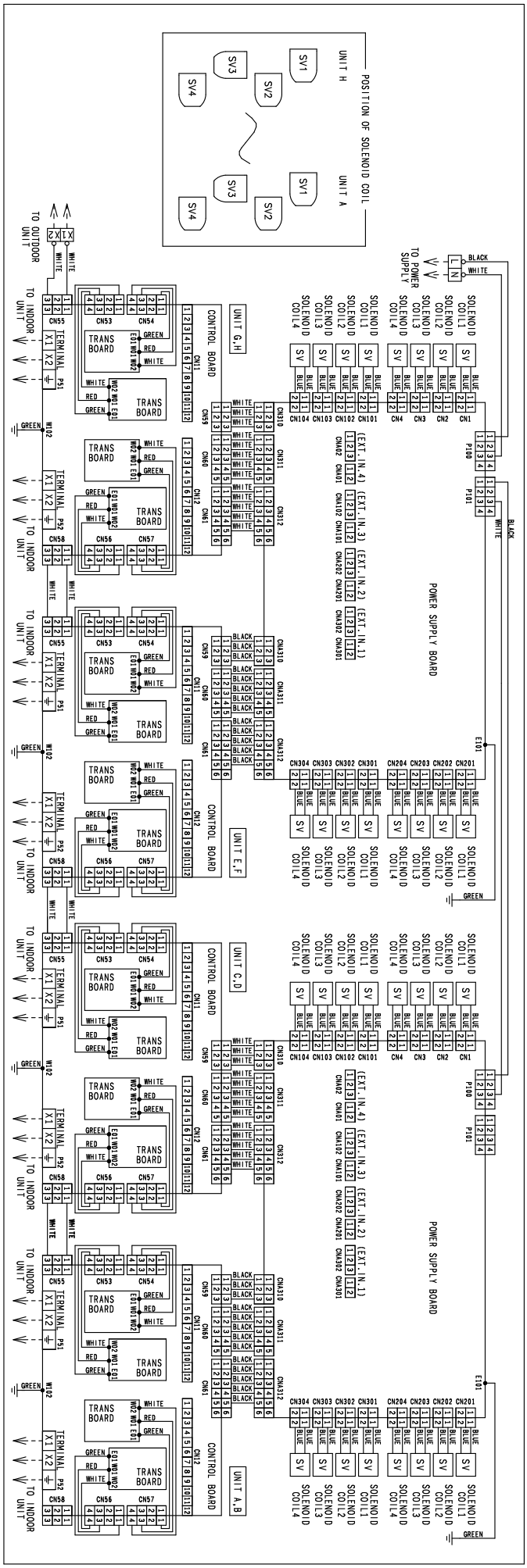

Model : UTP-RX12AH

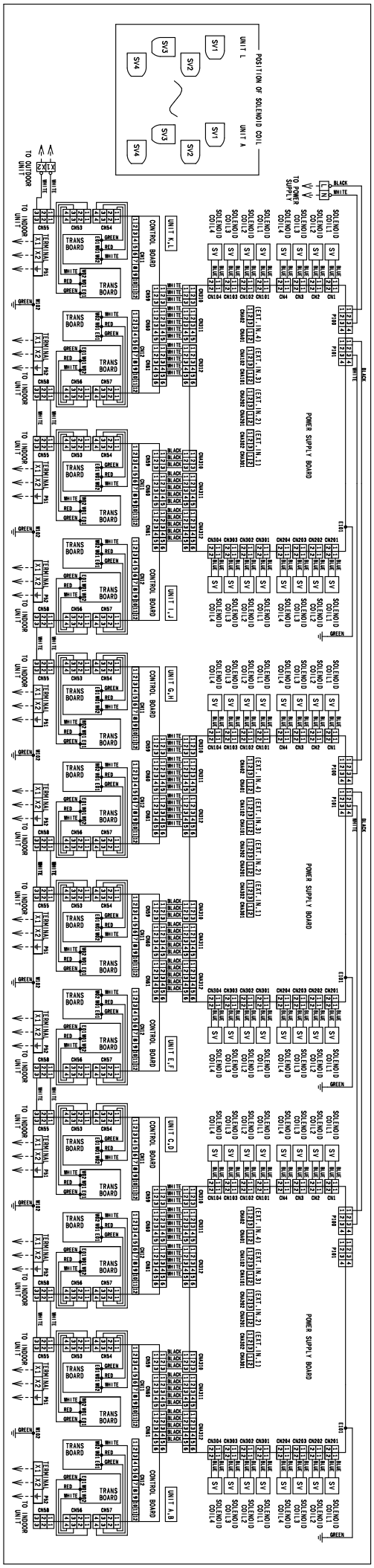

5-2-4 Outdoor Air Unit

Models : ARXH054GTAH, ARQH140GTAH

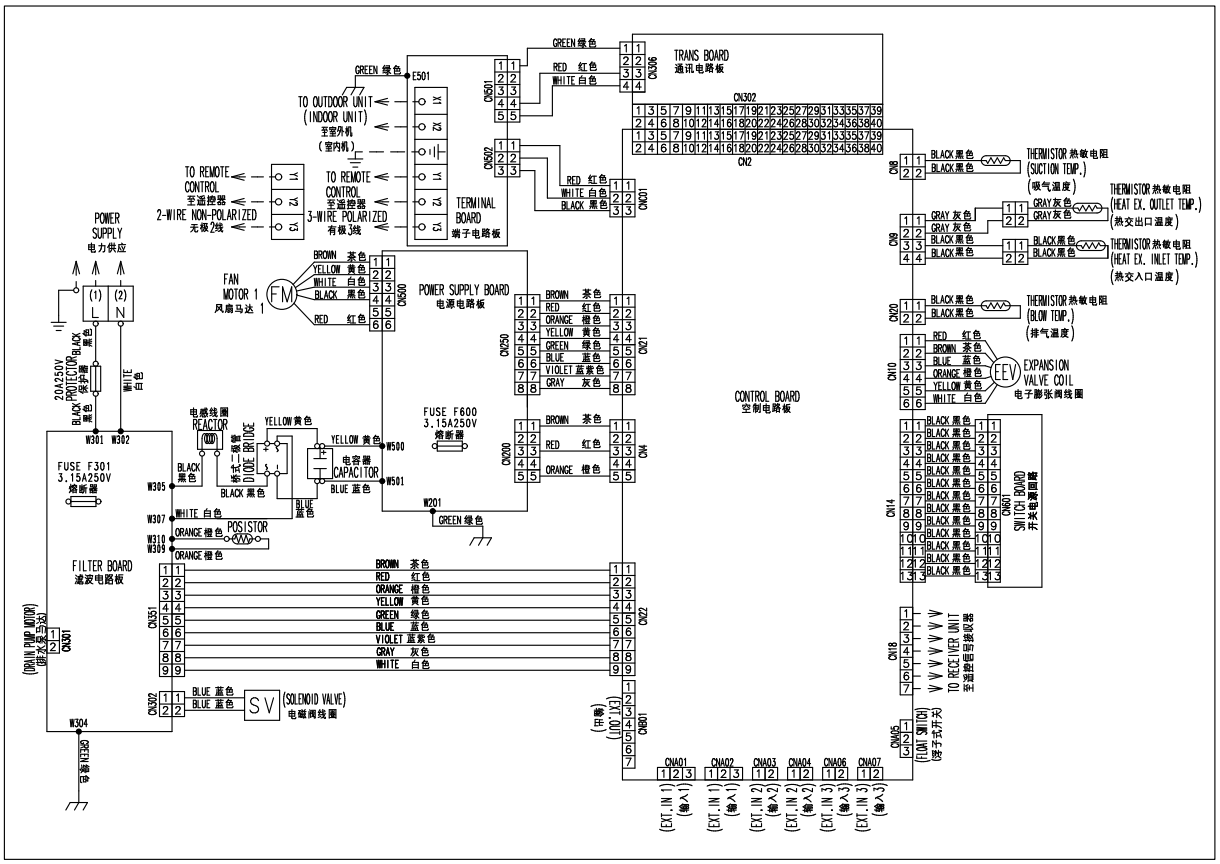

Models : ARXH072GTAH, ARQH224GTAH

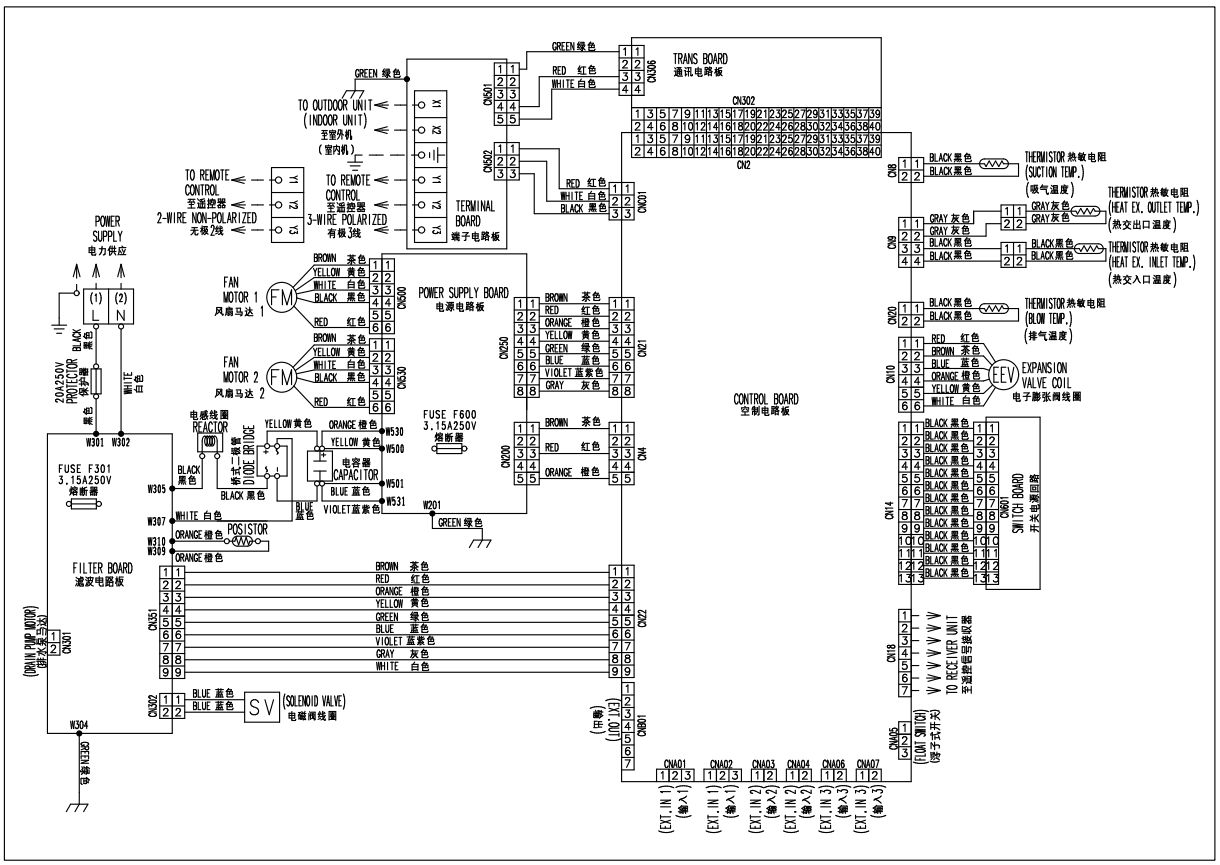

Models : ARXH096GTAH, ARQH280GTAH

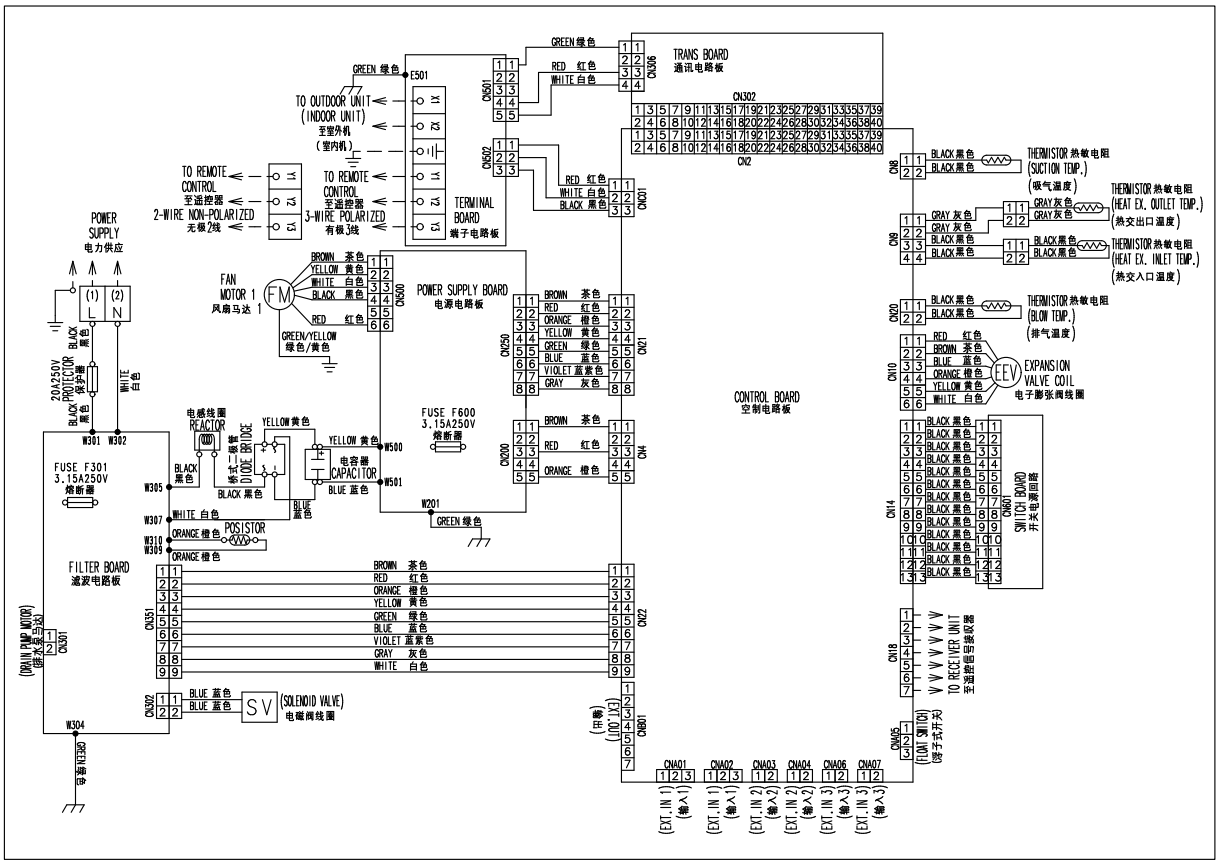

5-2-5 DX-KIT

1 . Refrigerant circuit

Models : UTP-VX30A, UTP-VX60A, UTP-VX90A

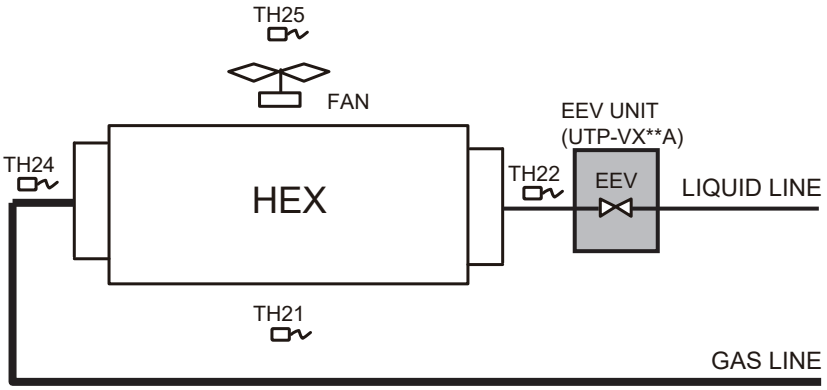

Symbol description

MARK	DESCRIPTION
HEX	Heat exchanger (Locally purchased)
FAN	Fan (Locally purchased)
EEV	Electric expansion valve
TH21	Suction airflow temperature thermistor
TH22	Heat exchanger (inlet) thermistor
TH24	Heat exchanger (outlet) thermistor
TH25	Discharge airflow temperature thermistor

2 . Wiring diagrams

Model : UTY-VDGX

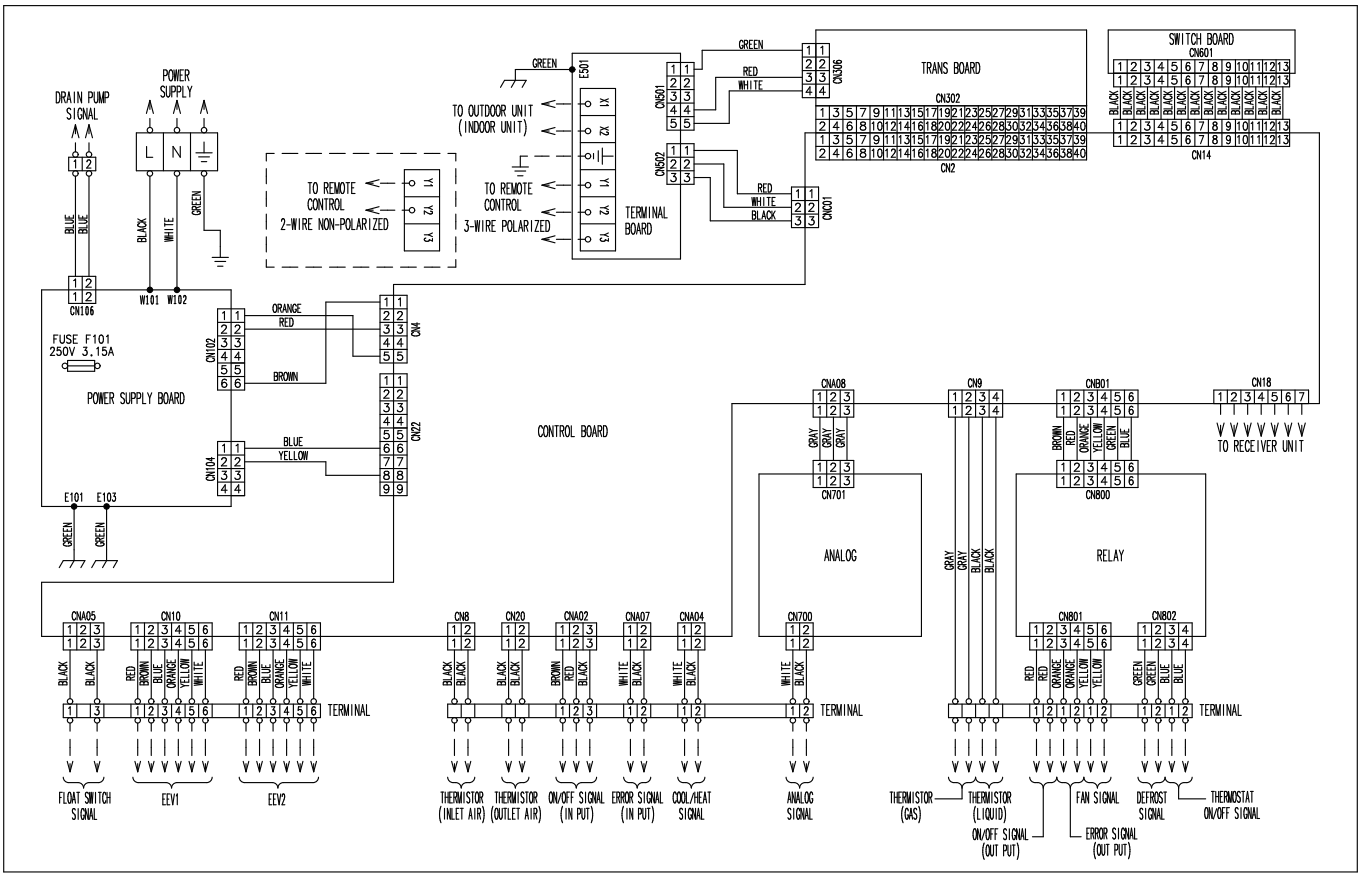

3 . Terminal block layout

3rd row

				1	2	1	2	1	2	1	2	1	2
Thermistor (GAS)		Thermistor (LIQUID)		ON/OFF Signal (OUT PUT)		Error SIGNAL (OUT PUT)		FAN SIGNAL		DEFROST SIGNAL		THERMOSTAT ON/OFF SIGNAL	

2nd row

				1	2	3	1	2	1	2	1	2	
Thermistor (INLET AIR)		Thermistor (OUTLET AIR)		ON/OFF Signal (IN PUT)			ERROR SIGNAL (IN PUT)		COOL/HEAT SIGNAL		ANALOG SIGNAL		

1st row

1	2	1	2	3	4	5	6	1	2	3	4	5	6
FLOAT SW SIGNAL		EEV1						EEV2					

1	2	L	N	E
DRAIN PUMP OUTPUT		POWER SUPPLY		

X1	X2	E	Y1	Y2	Y3
TRANSMISSION TO OUTDOOR UNIT			TO REMOTE-CONTROL		

5-3 SATURATION TABLE (R410A)

5-3-1 Saturation temperature and saturation pressure tables (°C / Mpa)

(Pressure: Gauge pressure)

Temp. (°C)	Saturation pressure (Mpa)	
	Saturated liquid	Saturated gas
-30	0.1722	0.1717
-29	0.1836	0.1830
-28	0.1953	0.1947
-27	0.2074	0.2067
-26	0.2199	0.2192
-25	0.2328	0.2320
-24	0.2460	0.2452
-23	0.2597	0.2588
-22	0.2737	0.2728
-21	0.2882	0.2872
-20	0.3031	0.3021
-19	0.3185	0.3174
-18	0.3343	0.3331
-17	0.3505	0.3493
-16	0.3672	0.3659
-15	0.3844	0.3830
-14	0.4021	0.4006
-13	0.4202	0.4187
-12	0.4389	0.4373
-11	0.4580	0.4563
-10	0.4776	0.4759
- 9	0.4978	0.4960
- 8	0.5185	0.5166
- 7	0.5398	0.5377
- 6	0.5616	0.5594
- 5	0.5839	0.5817
- 4	0.6069	0.6045
- 3	0.6304	0.6279
- 2	0.6545	0.6519
- 1	0.6791	0.6765
0	0.7044	0.7017
1	0.7303	0.7274
2	0.7569	0.7539
3	0.7840	0.7809
4	0.8119	0.8086
5	0.8403	0.8369
6	0.8695	0.8659
7	0.9000	0.8956
8	0.930	0.926
9	0.961	0.957
10	0.993	0.989
11	1.026	1.022
12	1.059	1.055
13	1.093	1.089
14	1.128	1.123
15	1.164	1.159
16	1.200	1.195
17	1.237	1.232

Temp. (°C)	Saturation pressure (Mpa)	
	Saturated liquid	Saturated gas
18	1.275	1.270
19	1.314	1.308
20	1.353	1.348
21	1.394	1.388
22	1.435	1.429
23	1.477	1.471
24	1.520	1.513
25	1.563	1.557
26	1.608	1.601
27	1.654	1.647
28	1.700	1.693
29	1.747	1.740
30	1.796	1.788
31	1.845	1.837
32	1.895	1.887
33	1.946	1.938
34	1.998	1.990
35	2.051	2.043
36	2.105	2.097
37	2.160	2.152
38	2.216	2.208
39	2.273	2.265
40	2.332	2.323
41	2.391	2.382
42	2.451	2.442
43	2.513	2.503
44	2.575	2.565
45	2.639	2.629
46	2.703	2.693
47	2.769	2.759
48	2.836	2.826
49	2.904	2.894
50	2.974	2.963
51	3.044	3.034
52	3.116	3.106
53	3.189	3.178
54	3.263	3.253
55	3.338	3.328
56	3.415	3.405
57	3.493	3.483
58	3.572	3.562
59	3.653	3.643
60	3.735	3.725
61	3.818	3.808
62	3.902	3.893
63	3.988	3.979
64	4.075	4.066
65	4.164	4.155

Saturation pressure (Mpa)	Saturation temperature (°C)	
	Saturated liquid	Saturated gas
0.0	-51.85	-51.83
0.1	-37.25	-37.21
0.2	-27.61	-27.55
0.3	-20.21	-20.14
0.4	-14.12	-14.04
0.5	- 8.89	- 8.80
0.6	- 4.30	- 4.20
0.7	- 0.17	- 0.06
0.8	3.58	3.69
0.9	7.02	7.15
1.0	10.22	10.35
1.1	13.21	13.34
1.2	16.01	16.15
1.3	18.66	18.80
1.4	21.17	21.31
1.5	23.55	23.70
1.6	25.83	25.98
1.7	28.01	28.16
1.8	30.10	30.25
1.9	32.11	32.26
2.0	34.04	34.20
2.1	35.91	36.06
2.2	37.72	37.87
2.3	39.46	39.62
2.4	41.16	41.31
2.5	42.80	42.95
2.6	44.40	44.55
2.7	45.95	46.10
2.8	47.47	47.62
2.9	48.94	49.09
3.0	50.38	50.53
3.1	51.78	51.93
3.2	53.16	53.30
3.3	54.50	54.63
3.4	55.81	55.94
3.5	57.09	57.22
3.6	58.35	58.48
3.7	59.58	59.70
3.8	60.79	60.91
3.9	61.98	62.09
4.0	63.14	63.25
4.1	63.99	64.38

5-3-2 Temperature and pressure of refrigerant (Graph)

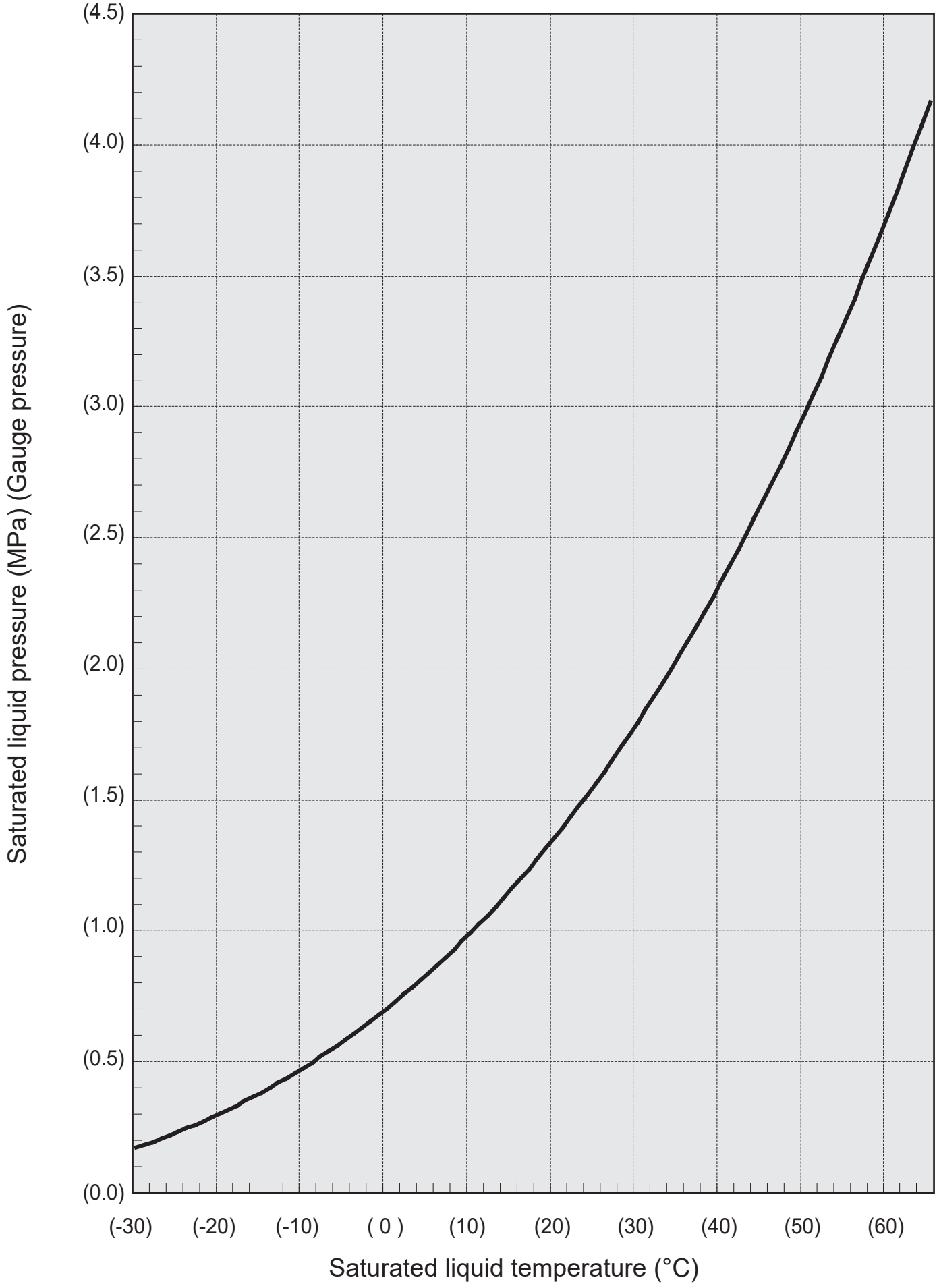

Refrigerant R410A INVERTER

AIRSTAGE™ VR-IV

Variable Refrigerant Flow System

6. DISASSEMBLY PROCESS

6. DISASSEMBLY / ASSEMBLY PROCESS

6.1 Indoor Unit

⚠ CAUTION

Before servicing the unit, turn the power supply switch OFF,
When you approach PWB, be sure to equip with the electrostatic removal band.
(PWB may be broken by static electricity.)

1. Indoor unit Transmisson PCB removal

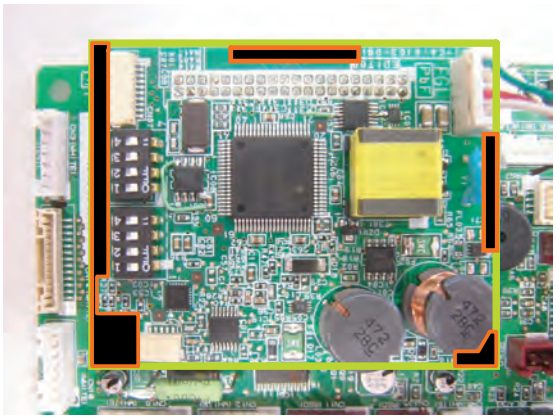

: Touchable area

1. Disconnect the connector of transmisson wire form the **Terminal - board side**.

2. Hold the PCB's both end of touchable area mentioned on the left figure.

3. Pull up the PCB one side and another side step by step.
   (Do not deform the pins on the controller PCB)

2. Indoor unit Transmisson PCB install

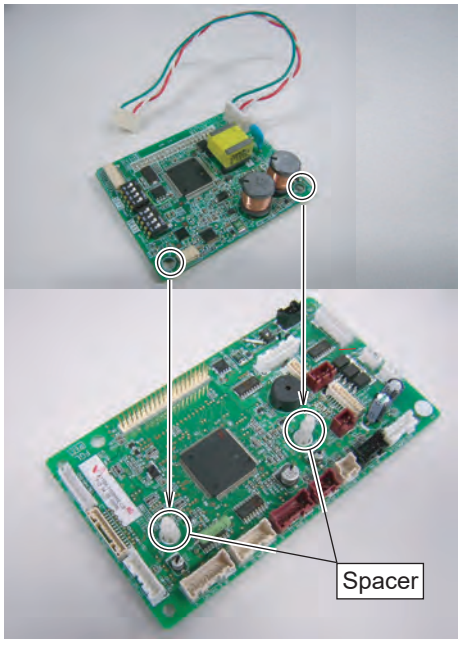

1. Before installing transmission PCB on to the Main PCB, confirm the connector of transmisson wire was connected on the Transmission PCB.

2. Hold the PCB's both end of touchable area and adjust the position of transmission PCB based on the position of spacers on the Main PCB. (Do not attach the transmission PCB wrong position.)
   *When the connection of transmission PCB and the Main PCB was wrong, the both of PCB might be broken after power supply on.

3. After adjusting the position of PCB, attach the PCB to the Main PCB.

Correct position

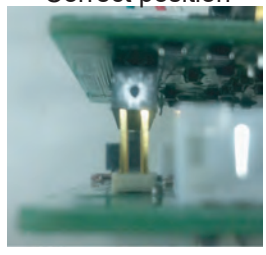

Incorrect position

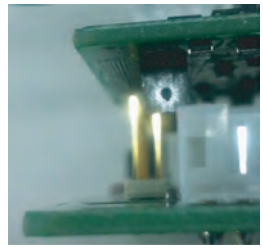

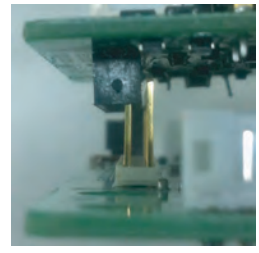

SET1-1	SET1-2	SET1-3	SET1-4	SET2-1	Indoor unit capacity
OFF	OFF	OFF	OFF	OFF	2.2kW
ON	OFF	OFF	OFF	OFF	2.8kW
OFF	ON	OFF	OFF	OFF	3.6kW
ON	ON	OFF	OFF	OFF	4.0kW
OFF	OFF	ON	OFF	OFF	4.5kW
ON	OFF	ON	OFF	OFF	5.6kW
OFF	ON	ON	OFF	OFF	7.1kW
ON	ON	ON	OFF	OFF	8.0kW
OFF	OFF	OFF	ON	OFF	9.0kW
ON	OFF	OFF	ON	OFF	11.2kW
OFF	ON	OFF	ON	OFF	12.5kW
ON	ON	OFF	ON	OFF	14.0kW
OFF	OFF	ON	ON	OFF	18.0kW
ON	OFF	ON	ON	OFF	22.4kW
OFF	ON	ON	ON	OFF	25.0kW
ON	ON	ON	ON	OFF	28.0kW

When you need to replace the transmission PCB to new one, set the DIP-SW setting as same as the previous PCB'S setting.

6.2 Outdoor Unit

⚠ WARNING

Before servicing the unit, turn the power supply switch OFF,
Then, do not touch electric parts for 10 minutes due to the risk of electric shock.

1. Appearance

Model : AJ* 108GALBH
AJ* A90/ 72GALBH

2. PANEL TOP removal

screws

Remove the 4 mounting screws.

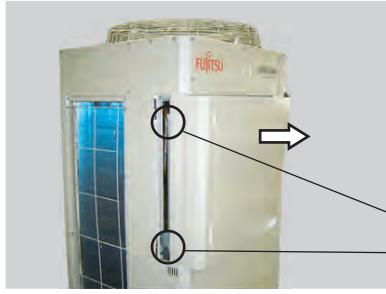

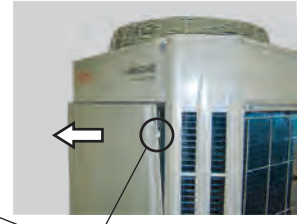

Hook (3 places)

Remove the PANEL TOP
by sliding toward.

3. CONTROL BOX COVER removal

screws

Remove the 4 mounting screws.

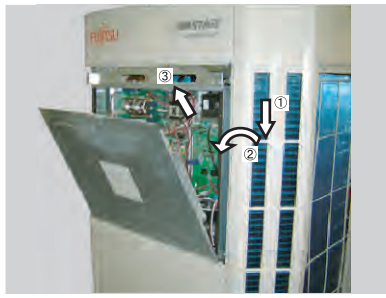

Remove the CONTROL BOX COVER
by sliding toward.

4. Layout plan in CONTROL BOX

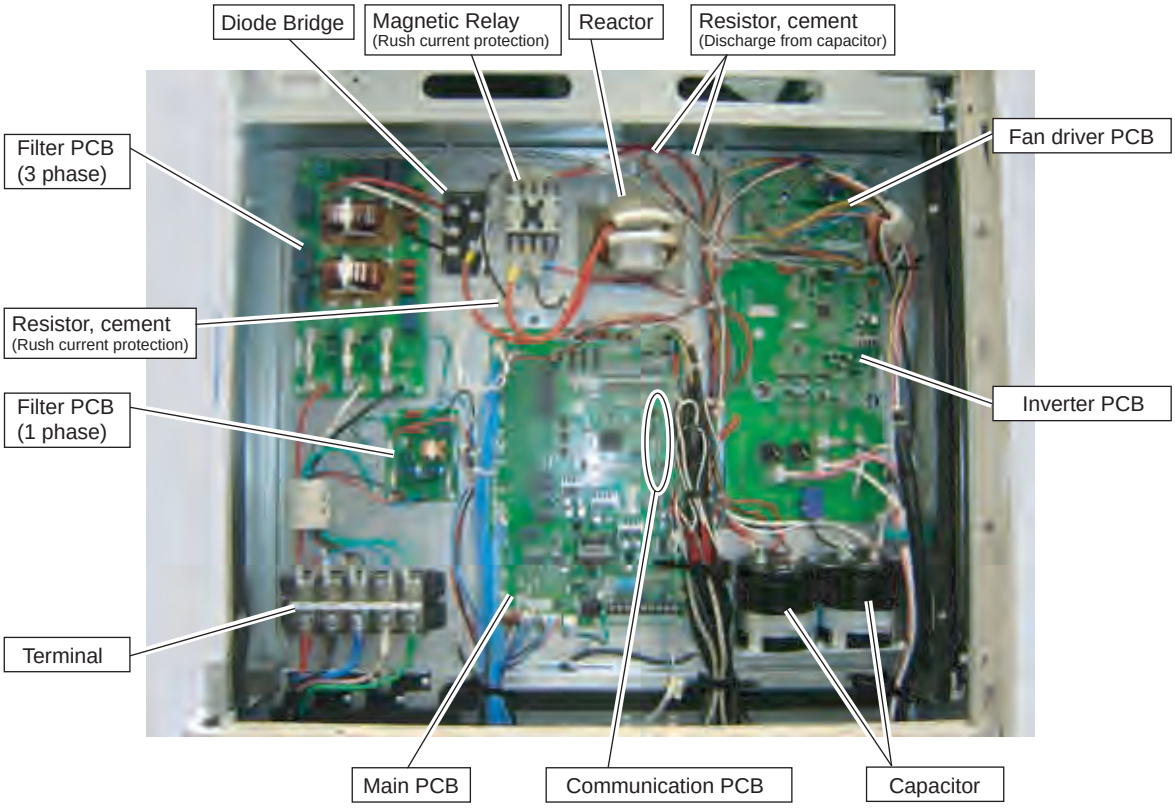

[Reference Data]
Model : AJ* 144/ 126GALBH

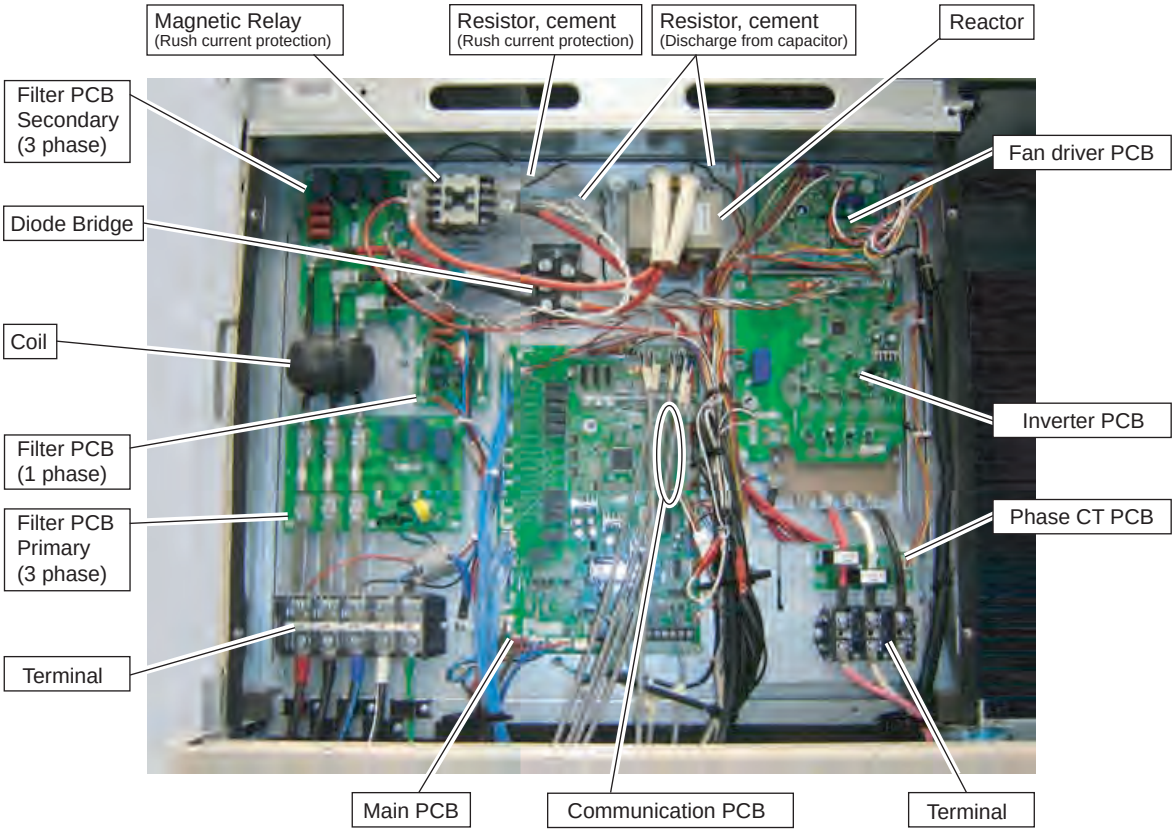

5. Screw tightening torque

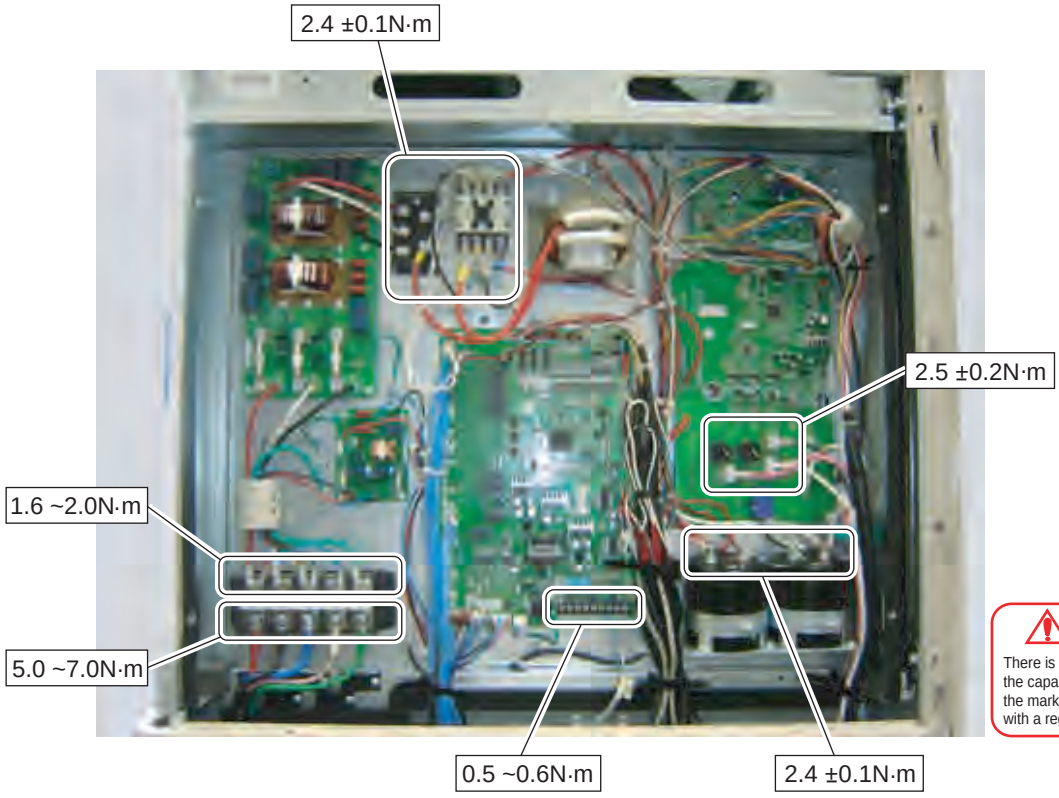

DANGER

There is danger to which a fire and the capacitor explosion break out in the market if it does not assemble it with a regulated torque.

[Reference Data]
Model : AJ* 144/ 126GALBH

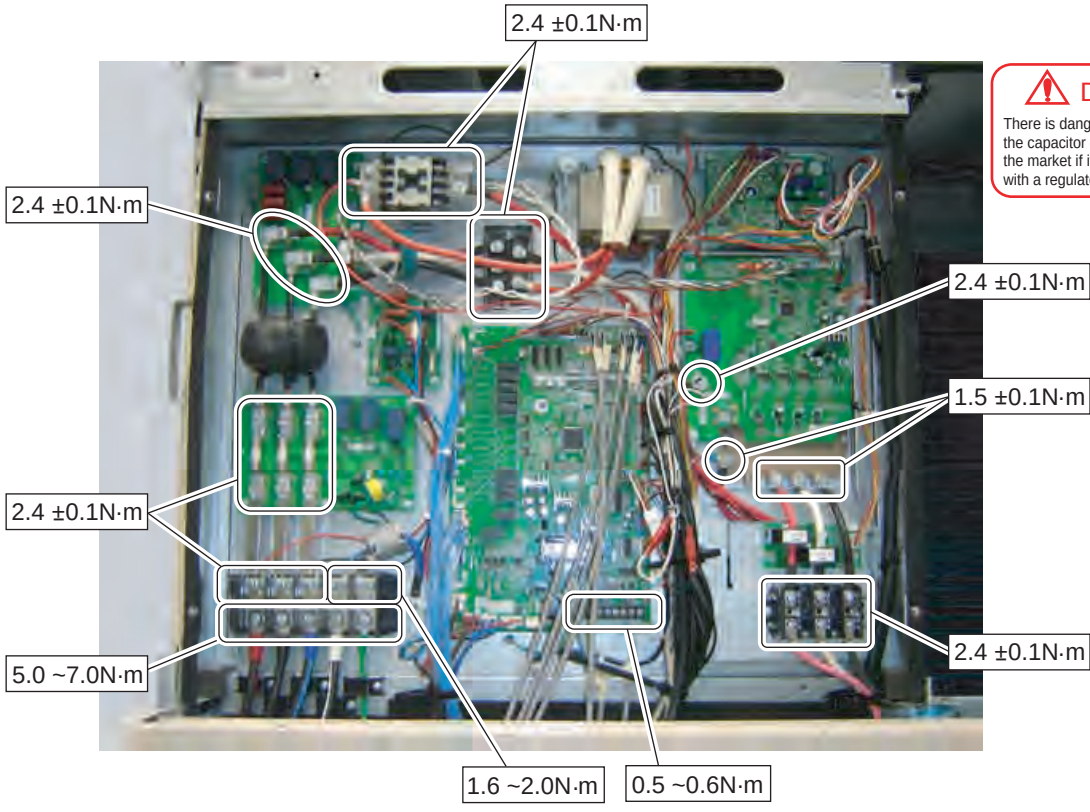

DANGER

There is danger to which a fire and the capacitor explosion break out in the market if it does not assemble it with a regulated torque.

6. Main PCB removal

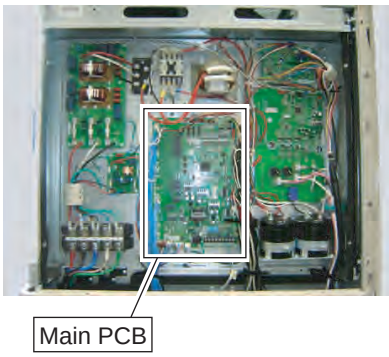

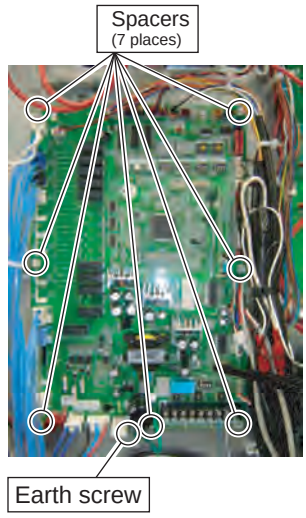

Remove the connectors and earth screw.
Remove the spacers.

⚠ CAUTION

The model name is written in Main PCB of the outdoor unit and indoor unit,
and when the factory of the product is shipped, it is written.
However ,the model name is not written in the Main PCB supplied for the repair.
When the following function is made to work, the written model name is needed.

1. Display of system list display in service tool or system controller
2. Display of refrigerant circuit diagram in service tool.
3. When you use the electricity charge calculation function
   as system controller or touch panel controller.

If the model name is not written, the trouble such as the refrigerant circuit diagram is not displayed or the electricity charge calculation is not done accurately might occur.

Therefore, please register the model name to each controller who uses it
when you exchange Main PCB by the repair.

1. Model name registration to service tool
   Please register the model name with the system list template files.
   (Please see the operation manual of the service tool for details)

2. Model name registration to system controller
   Please register the model name by the electricity charge calculation setting.
   (Please see the operation manual of the system controller for details)

7. Inverter PCB removal

AJ* 108/ 090/ 072GALBH

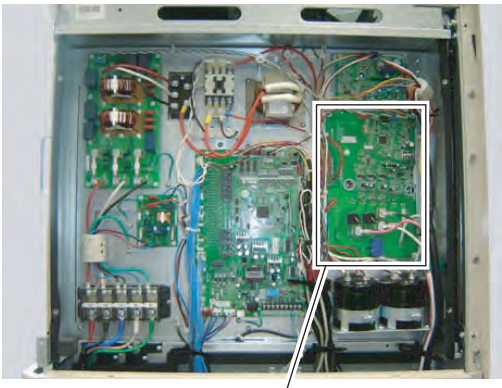

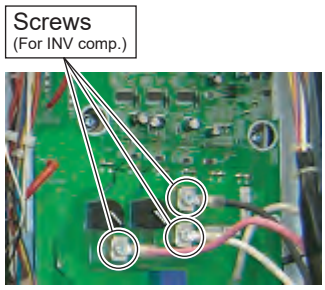

Remove the 3 mounting screws and codes.

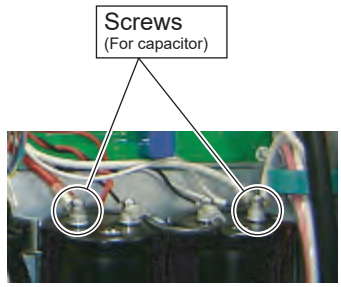

Remove the 2 mounting screws and codes.

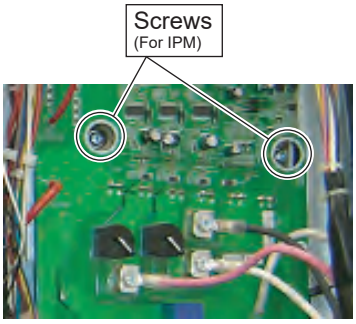

Remove the 2 mounting screws.

Note the tightening torque at the installation.
Tightening torque is as follows.
- Temporary tightening : 0.3 ±0.2N·m
- Final tightening : 2.7 ±0.2N·m

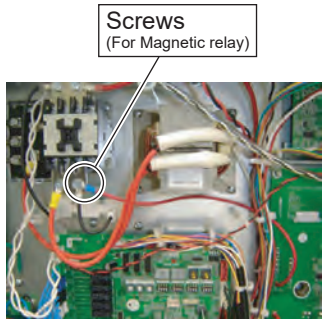

Remove the mounting screw and code.

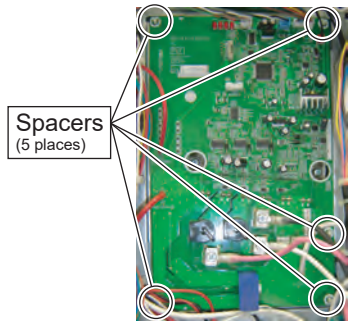

Remove the connectors and spacers.

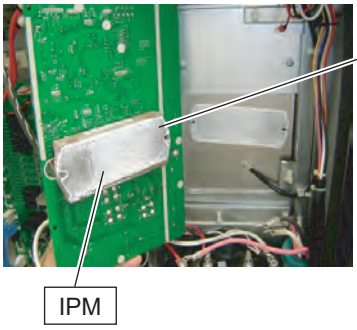

Compound

Parts Name	***Service Parts No.***
HEAT SINKER(20g)	***0000036795***

Spread the heat dissipation compound on the other side of IPM when you exchange Inverter PCB by the repair.

AJ* 144/ 126GALBH

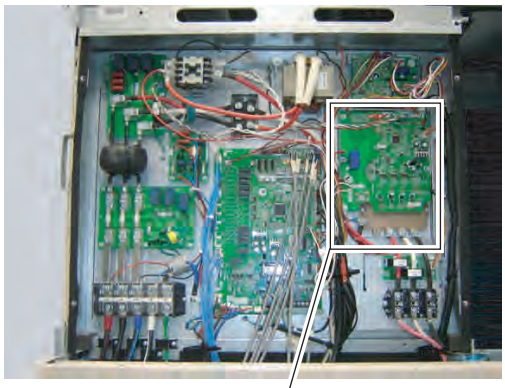

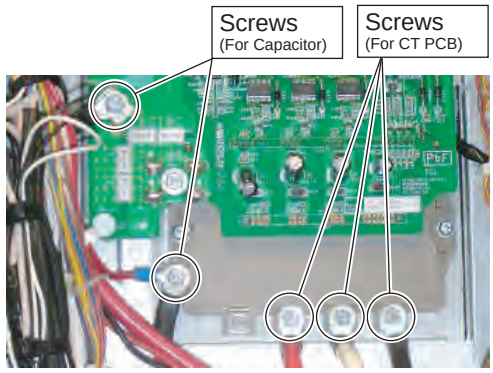

Remove the 5 mounting screws and codes.

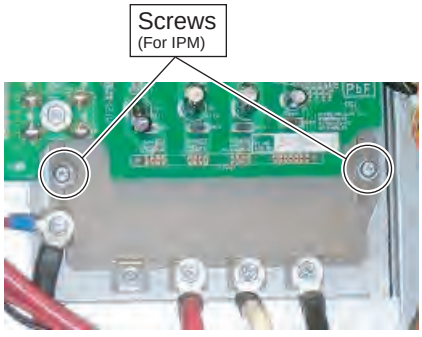

Remove the 2 mounting screws.

Note the tightening torque at the installation.
Tightening torque is as follows.
- Temporary tightening : 0.3 ±0.1N·m
- Final tightening : 1.5 ±0.1N·m

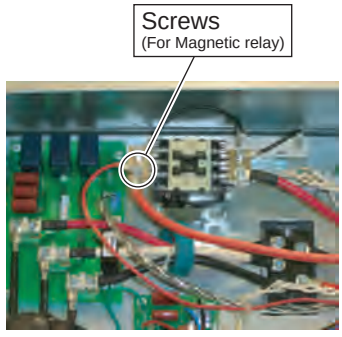

Remove the mounting screw and code.

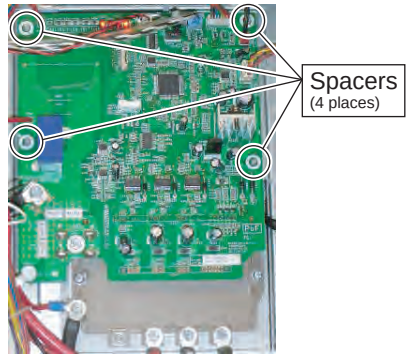

Remove the connectors and spacers.

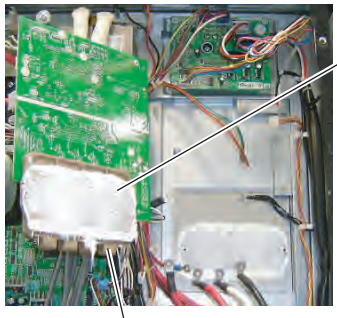

Compound

Parts Name	***Service Parts No.***
HEAT SINKER(20g)	***0000036795***

Spread the heat dissipation compound on the other side of IPM when you exchange Inverter PCB by the repair.

8. Fan driver PCB removal

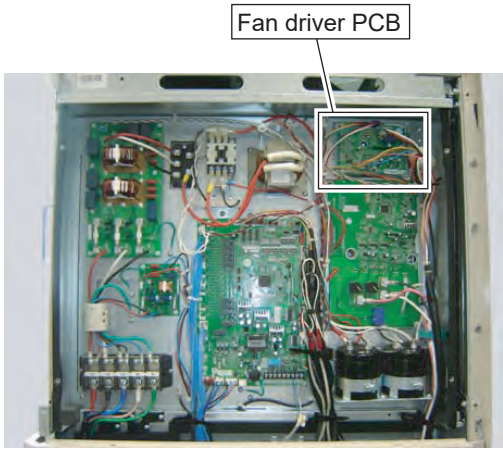

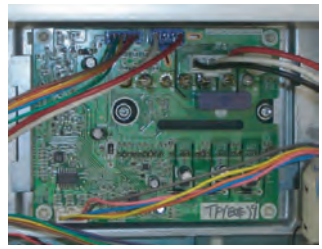

Remove the connectors.

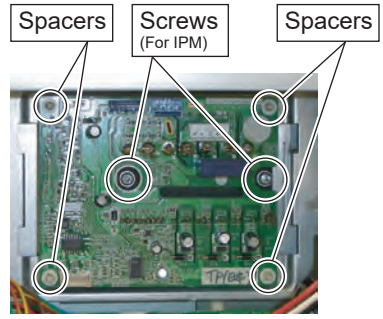

Remove the 2 mounting screws and the spacers.

Note the tightening torque at the installation.
Tightening torque is as follows.
- Temporary tightening : 0.3 ±0.1N·m
- Final tightening : 1.3 ±0.1N·m

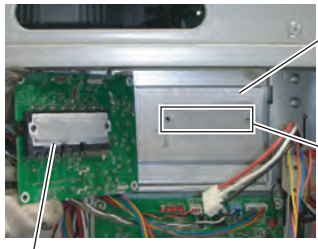

- Spread the heat dissipation compound on the other side of IPM when you exchange Fan driver PCB by the repair.

- Spread the heat dissipation compound without a gap between the Heat sink G and Heat sink H or F.

Compound

Parts Name	***Service Parts No.***
HEAT SINKER(20g)	***0000036795***

9. PANEL BTM removal

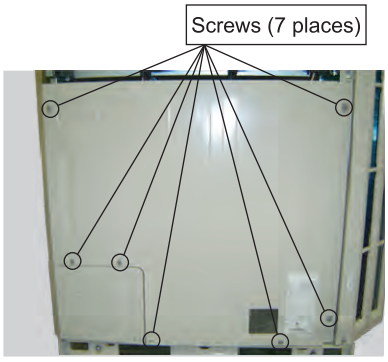

Remove the 7 mounting screws.

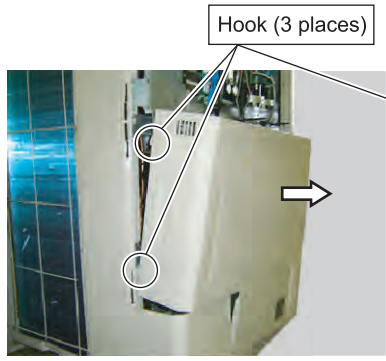

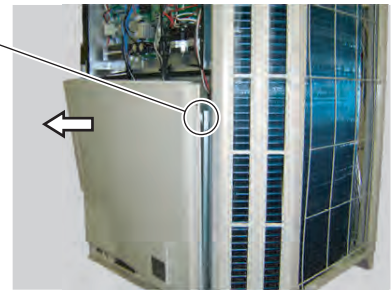

Remove the PANEL BTM
by sliding toward.

10. Control Box open

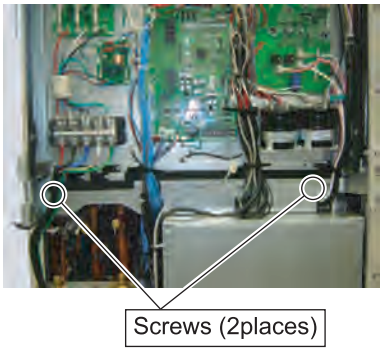

Remove the 2 mounting screws.

Loose or remove the cable ties.
(3 places)

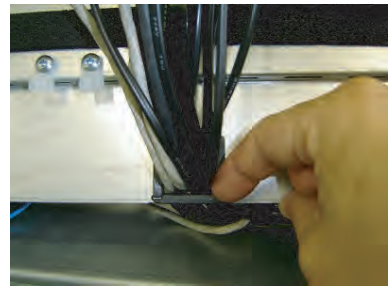

Remove the locking stopper
of edging saddle.(3 places)

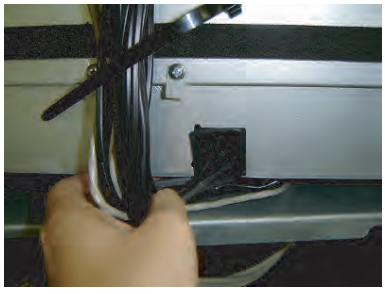

Remove the wires from edging saddle.
(3 places)

Remove the Wire plate
by sliding rightward.

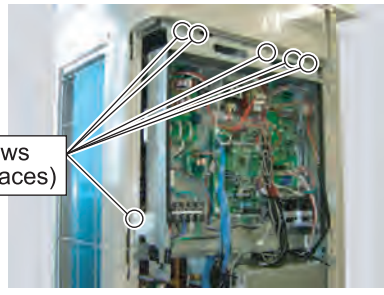

Remove the 6 mounting screws.

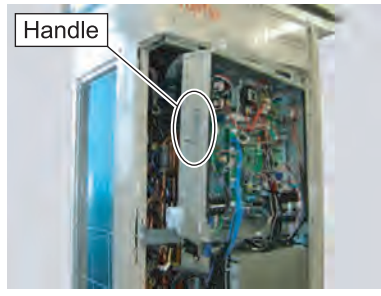

Open the Control Box with handle.

11. THERMISTORS removal

Cut the binder.

Remove the heat insulation.

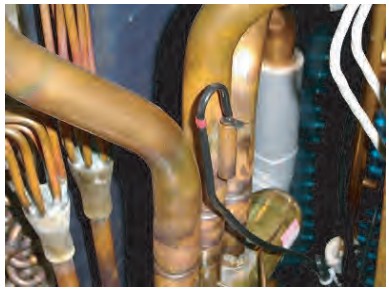

12. SOLENOID COILS (4way valve and Solenoid valves) removal

Remove the mounting screw.

Remove the SOLENOID COIL.

13. EEV COILS removal

Remove the EEV coil by hand.
There are two coils.

14. PRESSURE SENSORS removal

Remove the PRESSURE SENSOR with wrench.
There are two sensors.
(High and Low pressure)

Note the tightening torque at the installation.
Tightening torque is 15±1.5N•m.

15. Fan motor removal

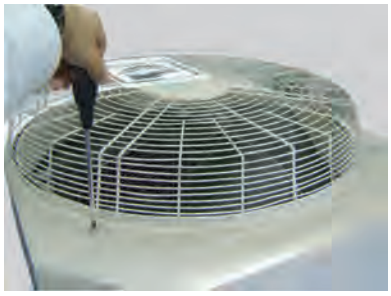

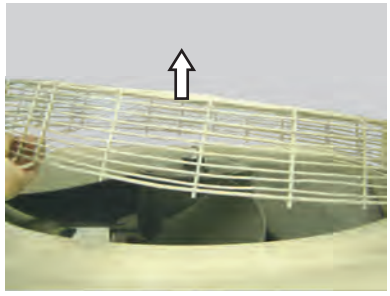

Remove the Fan Guard.

Remove the nut.
Note the tightening torque at the installation.
Tightening torque is from 15 to 20N·m.

Remove the Propeller fan.
Note at the installation.
Insert propeller fan and motor shaft reference D cutting position.

Cut the cable tie.

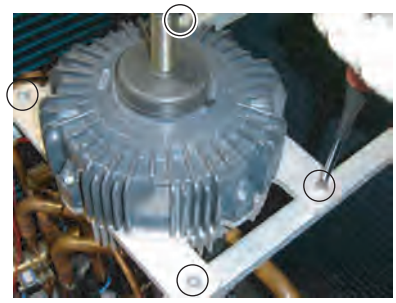

Remove the 4 mounting screws.
Remove the Fan motor.

16. Comp box cover removal

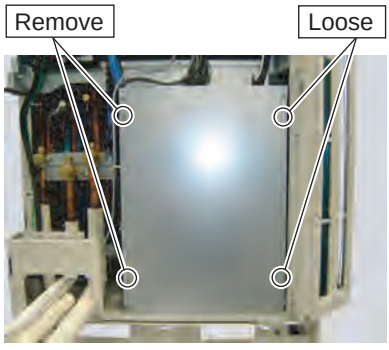

Loose the 2 mounting screws.
Remove the 2 mounting screws.

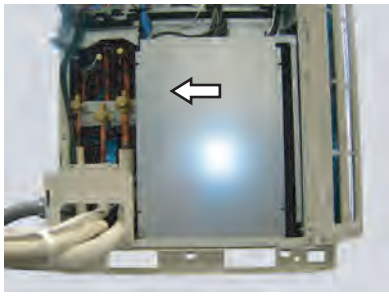

Remove the Comp box cover by sliding leftward and toward.

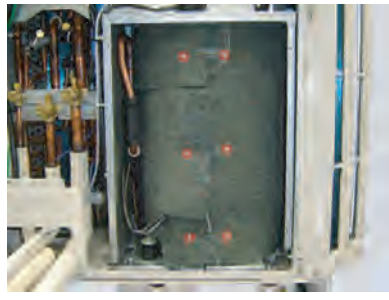

17. Compressor removal

Precautions for exchange of Compressor.

Do not allow moisture or debris to get inside refrigerant pipes during work.

Procedure for compressor removal.

(1) Turn off power.
(2) Remove the Panel top and Panel btm.
(3) Remove the Control Box.
(4) Fully close the 3-way valve (Discharge gas), (Suction gas), and (Liquid).
(5) Collect the refrigerant from the service port.
Start the following work after completely collecting the refrigerant.
Do not reuse the refrigerant that has been collected.

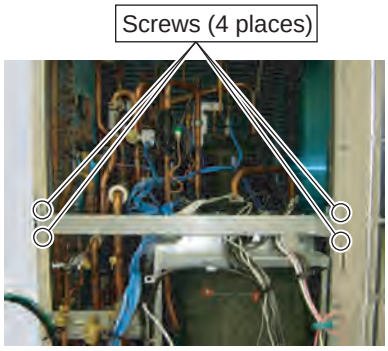

Remove the 4 mounting screws.
Remove the Center beam.

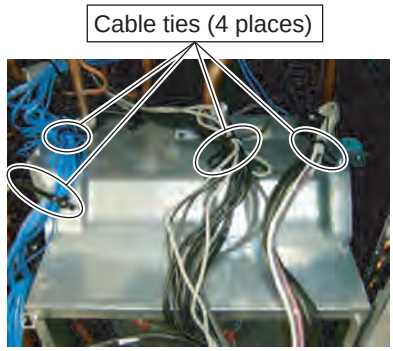

Loose or remove the cable ties.
(4 places)

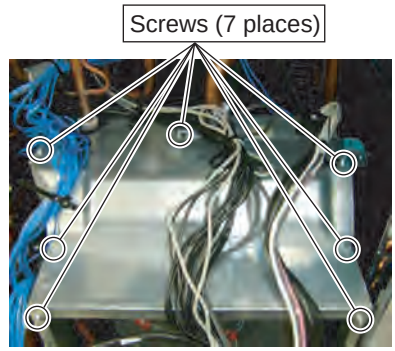

Remove the 7 mounting screws.

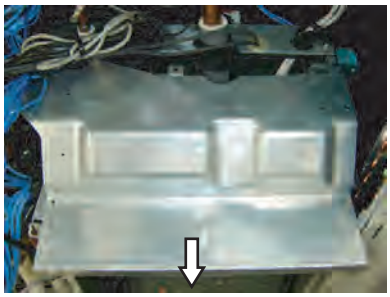

Remove the Comp Box(Top)
by sliding toward.

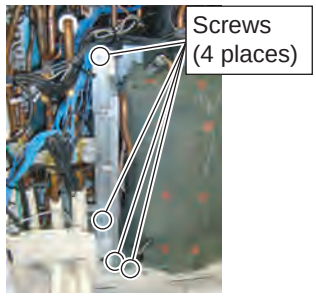

Remove the 4 mounting screws.

Remove the Comp Box(L)
by sliding toward.

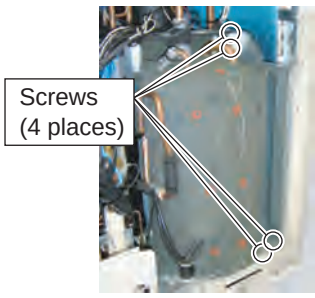

Remove the 4 mounting screws.

Remove the Comp Box(R)
by sliding toward.

Remove the Compressor cover (Top).

Note :
Compressor cover (Top) consists of 2 parts.
The inside of the Comp.cover is white, and
the outside of Comp.cover is green.

Remove the Compressor cover (Outside), Compressor cover (Accumulator), and Compressor cover (Body).

Remove the Terminal Cover.

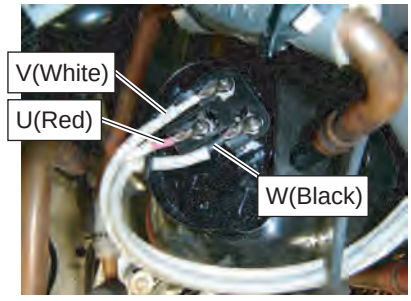

[U: Red, V: White, W: Black]

Note the tightening torque at the installation.
Tightening torque is 2.0 ~2.5N•m.

Remove the 3 mounting screws of Terminal.

Remove the Discharge temp. thermistor and Compressor shell temp. thermistor.

Remove the Comp Bolts.
(4 places)

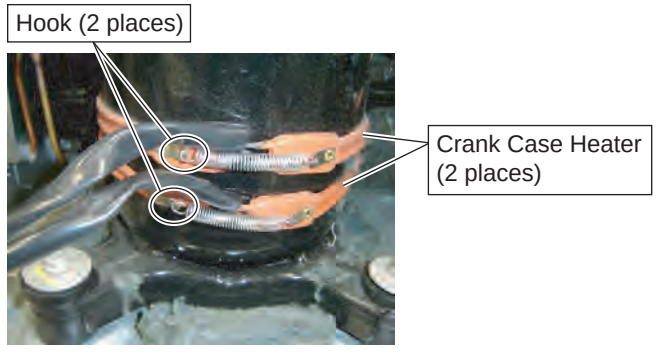

Remove the Crank Case Heaters.

Note the tightening torque at the installation.
Crank Case Heater should not overlap each other.

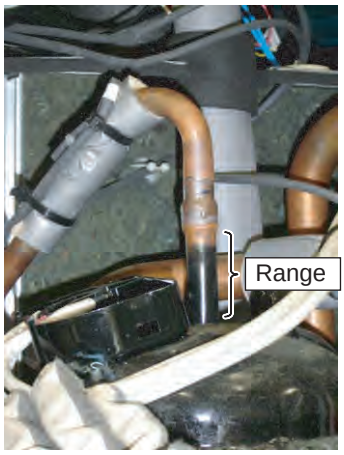

Cut the Discharge pipe in this range.

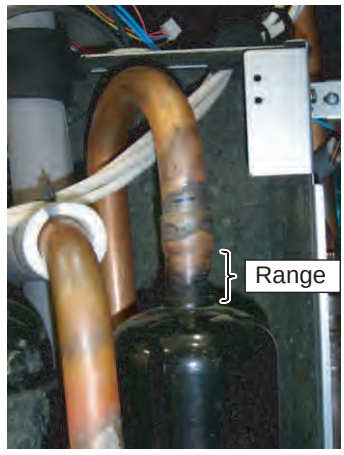

Cut the Suction pipe in this range.
Remove the Compressor.

Caution
- Keep their shape better.
- There is a possibility of catching fire to oil when removing by the welding without cutting it.

Procedure for compressor installation.

Reverse procedure to removing the compressor.

Precautions for installation of Compressor.

(1) When brazing, do not apply the flame to the terminal.
(2) When brazing, be sure to replace the air in the pipe with nitrogen gas to prevent forming oxidization scale.

18. Precautions for when replacing refrigerant-cycle-parts

(1) During replacement of the following parts shall be protected by wet rag and not make the allowable temperature or more.
(2) Remove the heat insulation when there is the heat insulation near the welding place.
Move and cool it when its detaching is difficult.
(3) Cool the parts when there are parts where heat might be transmitted besides the replacement part.
(4) Interrupt the flame with the fire-retardant board when the flame seems to hit the following parts directly.
(5) Do not allow moisture or debris to get inside refrigerant pipes during work.
(6) When brazing, be sure to replace the air in the pipe with nitrogen gas to prevent forming oxidization scale.

Part name	Allowable temperature	Precautions in work
Solenoid Valve 1 /2 /3 /4	200°C	Remove the coil before brazing. And install the coil after brazing.
Expansion Valve 1 /2 /3	120°C	Remove the coil before brazing. And install the coil after brazing.
4-way Valve A /B		Remove the suction temp. sensor before brazing. And install the suction temp. sensor after brazing.
Check Valve		
3-way Valve (Discharge gas)	100°C	
3-way Valve (Suction gas)		
3-way Valve (Liquid)		
Union Joint		Remove the pressure sensor before brazing. And install the pressure sensor after brazing.
High pressure sensor		Tighten the flare part gripping it. (Tightening torque :15±1.5N·m) Do the static electricity measures.
Low pressure sensor		
Pressure switch		

AIRSTAGE™ VR-IV

Variable Refrigerant Flow System

FUJITSU GENERAL LIMITED

3-3-17, Suenaga, Takatsu-ku, Kawasaki 213-8502, Japan

Product specifications are subject to change without notice.

"AIRSTAGE™" is a worldwide trademark of FUJITSU GENERAL LIMITED.

Copyright© 2004 Fujitsu General Limited. All rights reserved.