Split type air conditioner
Duct type (50Hz)

GENERAL

SERVICE MANUAL

Indoor unit	Outdoor unit
ARHG72LHTA	AOHG72LRLA

Refrigerant R410A

CONTENTS

SPECIFICATIONS 1
DIMENSIONS. 2
REFRIGERANT SYSTEM DIAGRAM . . . 4
CIRCUIT DIAGRAM. 5
PCB CIRCUIT DIAGRAM 8
ERROR DETECTION. 11
PARTS (INDOOR UNIT) 13
PARTS (OUTDOOR UNIT) 17
ACCESSORIES. 26

FUJITSU GENERAL LIMITED

SPECIFICATIONS

ELECTRICAL DATA

INDOOR UNIT		ARHG72LHTA
OUTDOOR UNIT		AOHG72LRLA
POWER SUPPLY Indoor		Single phase 230V 50Hz
POWER SUPPLY Outdoor		Three phase 400V 50Hz
COOLING	Capacity	19.00 kW
	Power consumption	6.46 kW
	EER	2.94 kW/kW
	Rated operating current Indoor	3.2 A
	Rated operating current Outdoor	11.2 A
	Max operating current Indoor	4.6 A
	Max operating current Outdoor	13.3 A
	Moisture removal	4.5 L/h
HEATING	Capacity	22.40 kW
	Power consumption	6.59 kW
	COP	3.40 kW/kW
	Rated operating current Indoor	3.2 A
	Rated operating current Outdoor	11.5 A
	Max operating current Indoor	4.6 A
	Max operating current Outdoor	13.3 A

FAN MOTOR DISCRIMINATION

INDOOR UNIT	MFG-ZG5KB2P
OUTDOOR UNIT	MFE-ZA2VB2N

FAN REVOLUTION

INDOOR UNIT	High	1,130 rpm
	Medium	1,040 rpm
	Low	930 rpm
	Quiet	820 rpm
OUTDOOR UNIT	Cooling	Upper 680 / Lower 680
	Heating	Upper 680 / Lower 680

AIR CIRCULATION

INDOOR UNIT	High	4,300 m^3/h
	Medium	3,900 m^3/h
	Low	3,450 m^3/h
	Quiet	3,000 m^3/h
OUTDOOR UNIT	Cooling	8,400 m^3/h
	Heating	8,400 m^3/h

NOISE LEVEL

INDOOR UNIT	High	46 dB
	Medium	43 dB
	Low	41 dB
	Quiet	39 dB
OUTDOOR UNIT	Cooling	55 dB
	Heating	55 dB

Static pressure : 72Pa

Duct length : Inlet 1m, Outlet 2m

COMPRESSOR AND REFRIGERANT

COMPRESSOR TYPE		Scroll type, 3 pole, 3 phase, DC brushless motor
DISCRIMINATION		ANB66FVFMT
WEIGHT (with oil)		37.6 kg
PRECHARGED REFRIGERANT		5,600 g
REFRIGERANT TYPE		R410A
FULL CHARGE	Pipe length 30 m	5,600 g
	50 m	7,800 g
	70 m	10,000 g
	100 m	13,300 g
ADDITIONAL CHARGE		110 g/m
MAX PIPE HEIGHT		30 m

DIMENSIONS

INDOOR UNIT H x W x D	360 x 1,400 x 850 mm
OUTDOOR UNIT H x W x D	1,428 x 1,080 x 480 mm

WEIGHT

INDOOR UNIT Net / Shipping	69 kg / 80 kg
OUTDOOR UNIT Net / Shipping	165 kg / 183 kg

DIMENSIONS

INDOOR UNIT

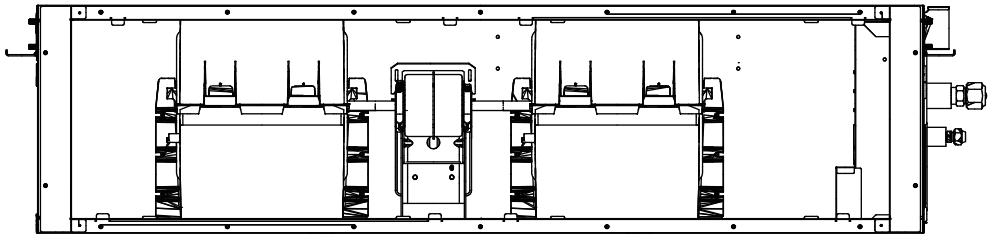

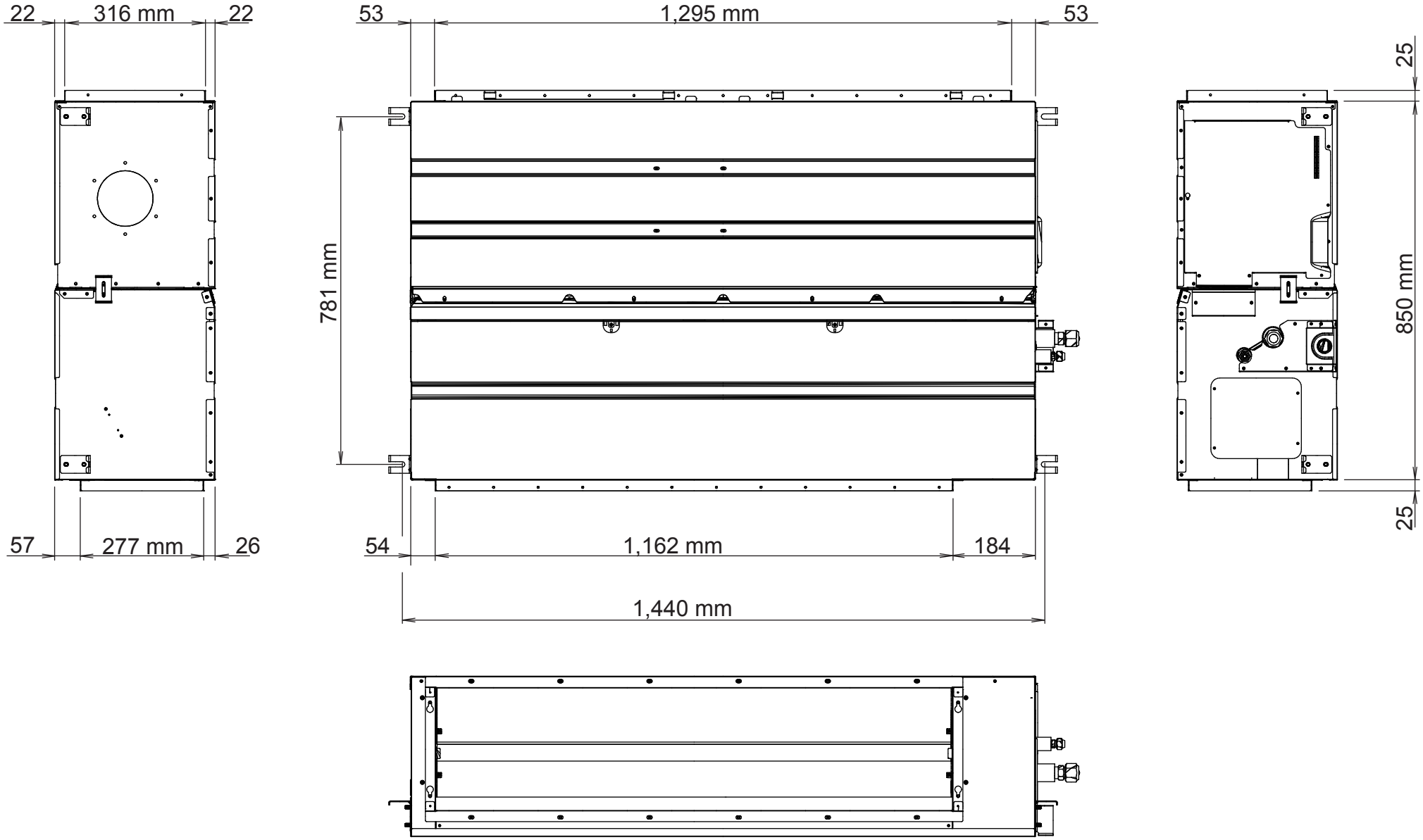

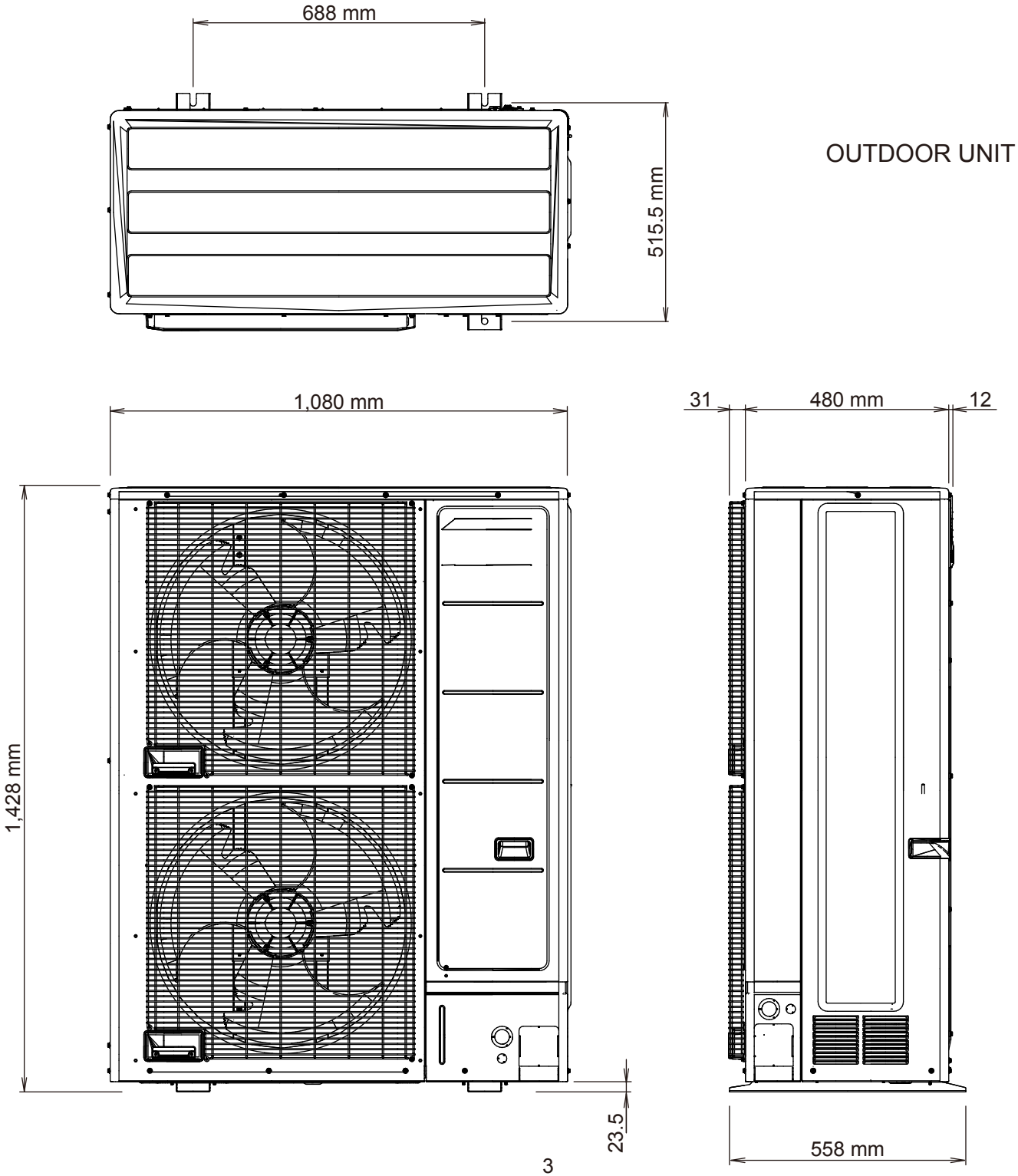
688 mm
515.5 mm
OUTDOOR UNIT
1,080 mm
31
480 mm
12
1,428 mm
23.5
558 mm

REFRIGERANT SYSTEM DIAGRAM

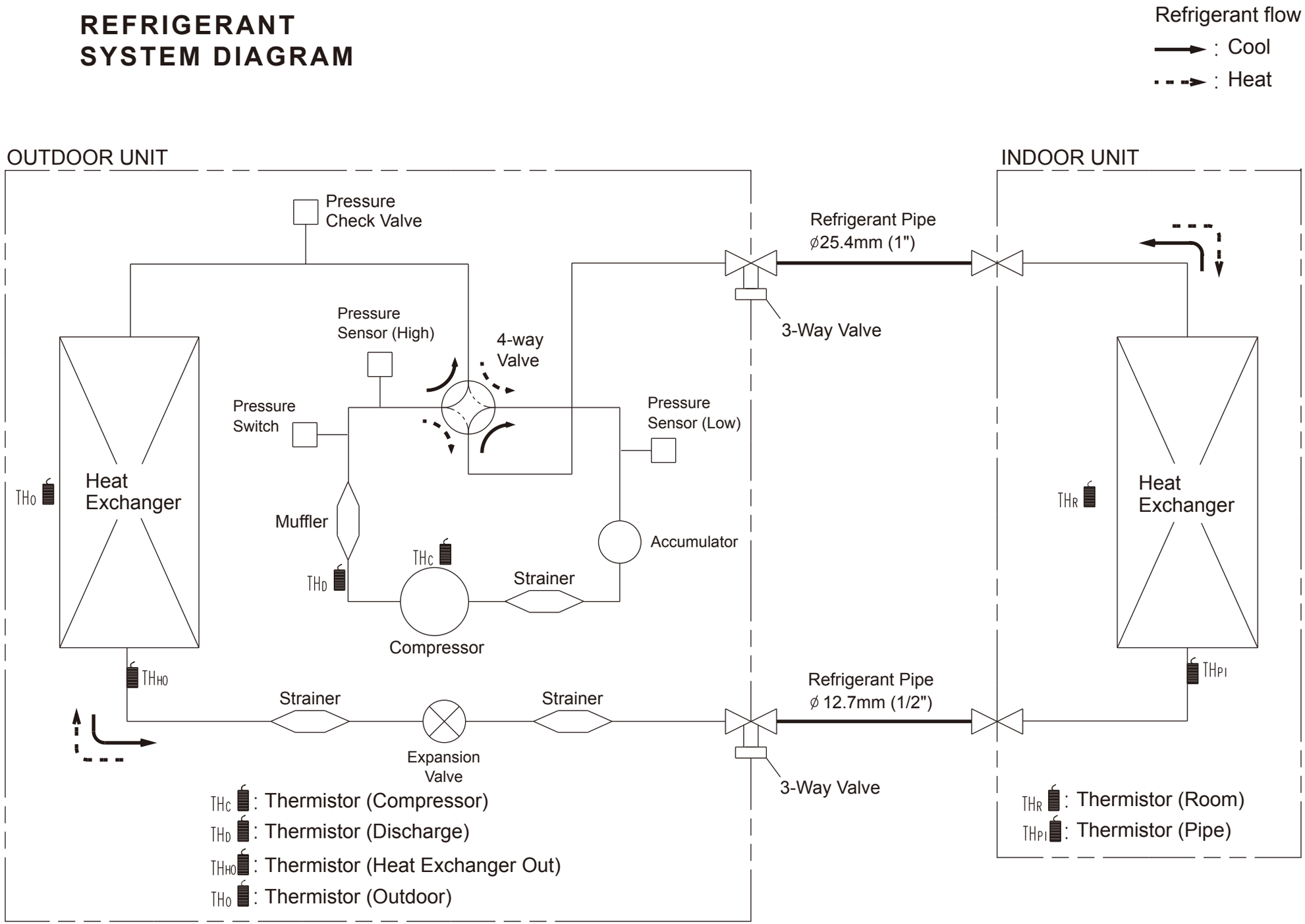

CIRCUIT DIAGRAM

INDOOR UNIT

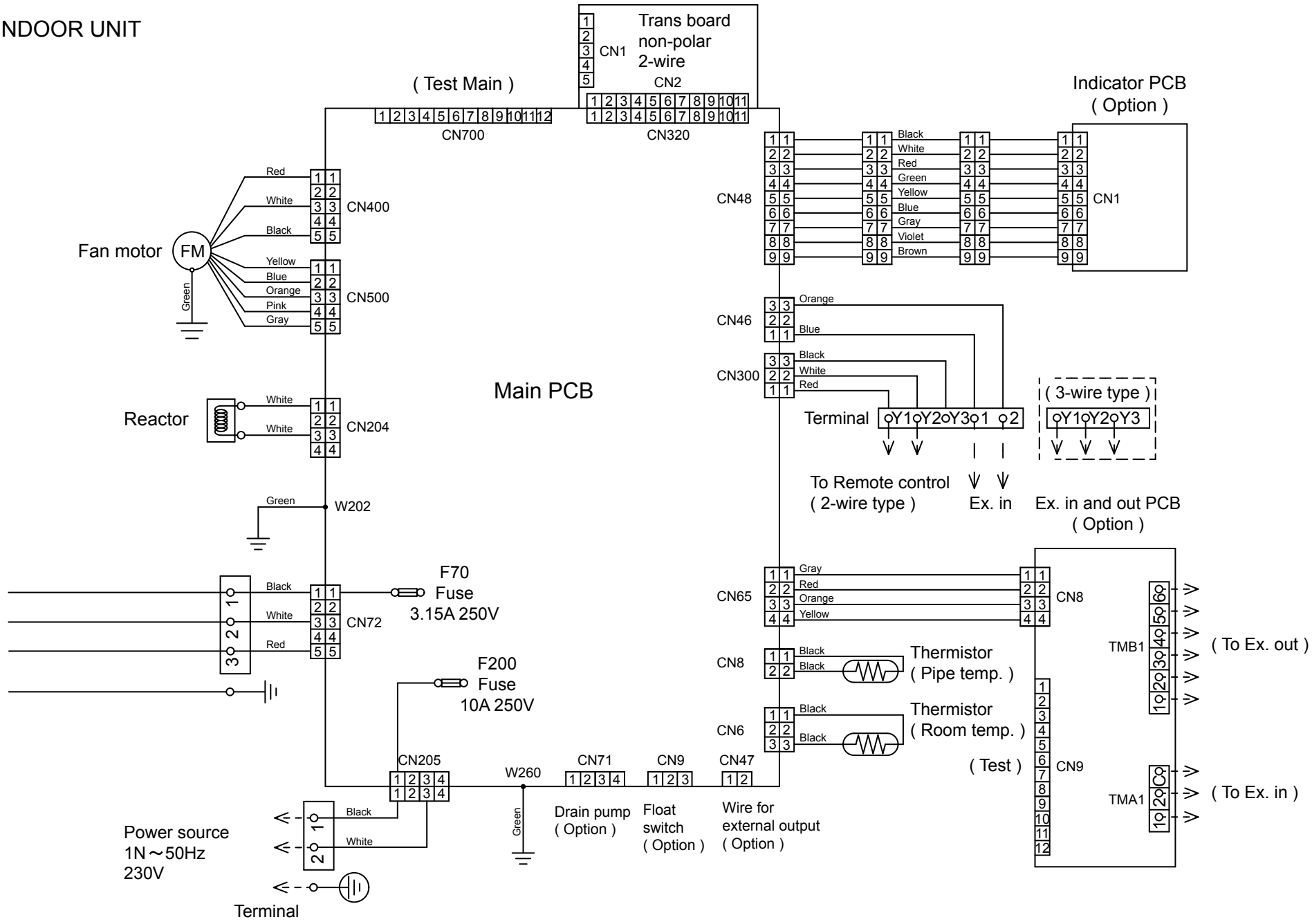

Model : AOHG72LRLA

Revision Code : A

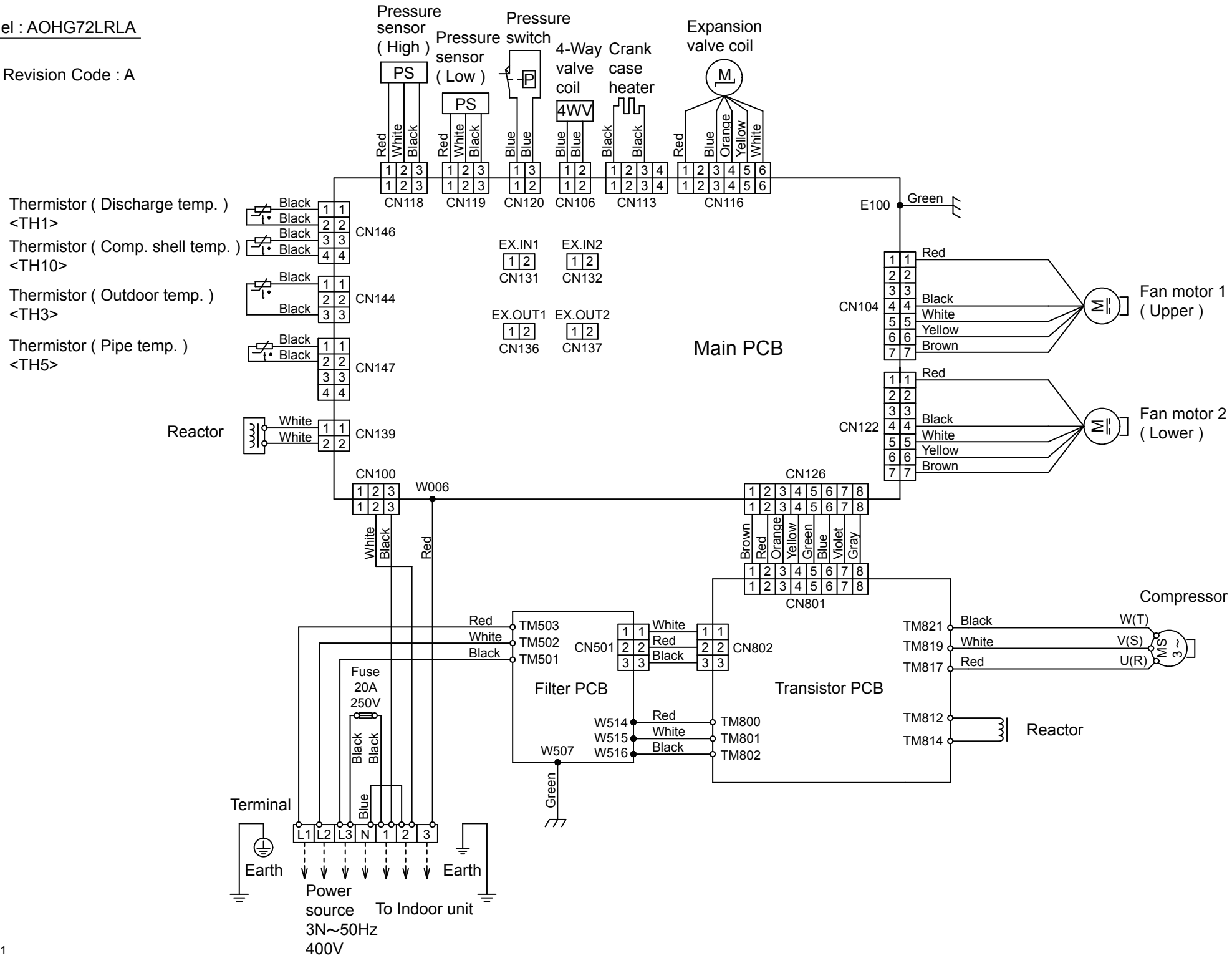

Model : AOHG72LRLA

Revision Code : None

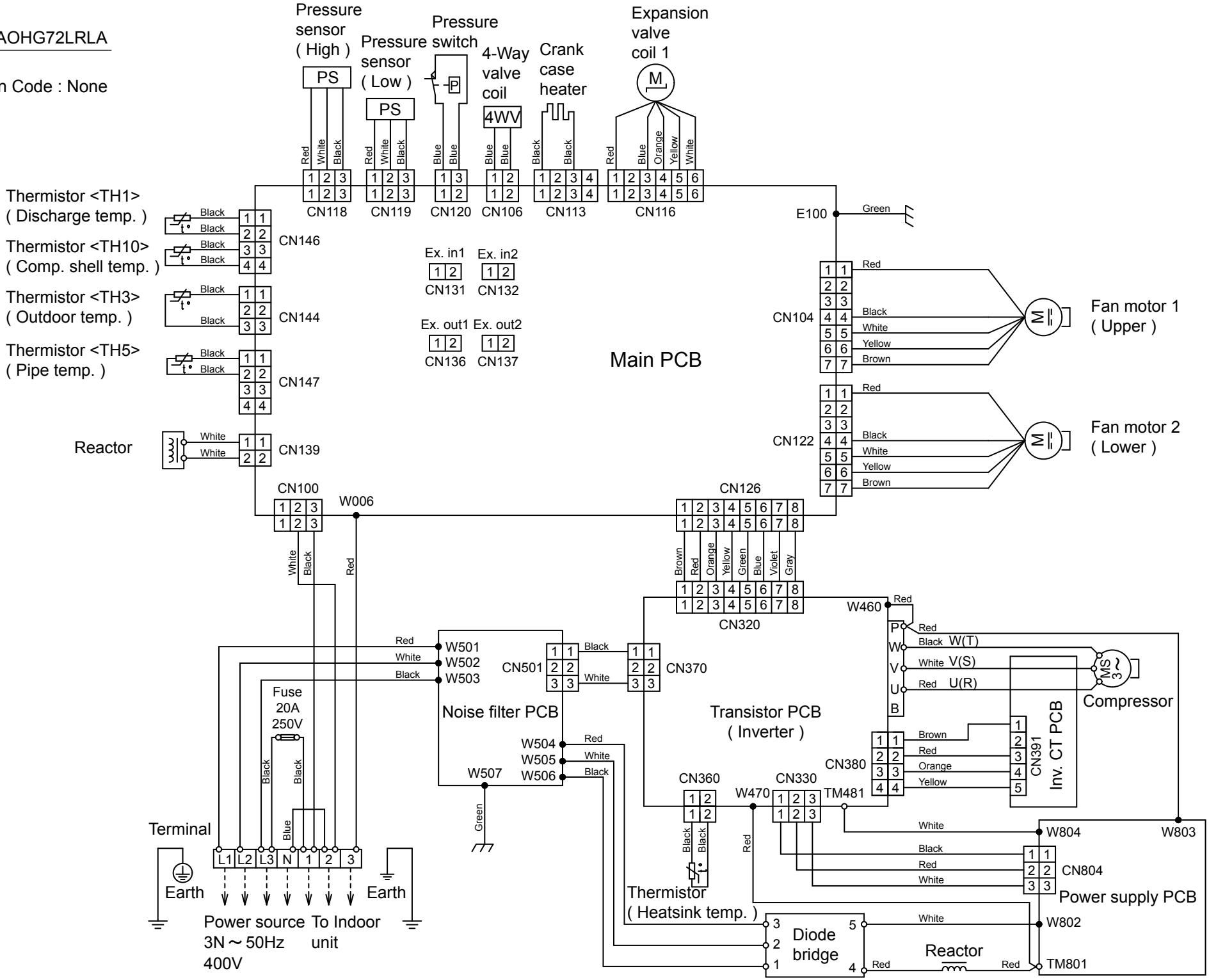

PCB CIRCUIT DIAGRAM

Model : ARYG72LHTA

CONTROL UNIT
EZ-0160RHSE

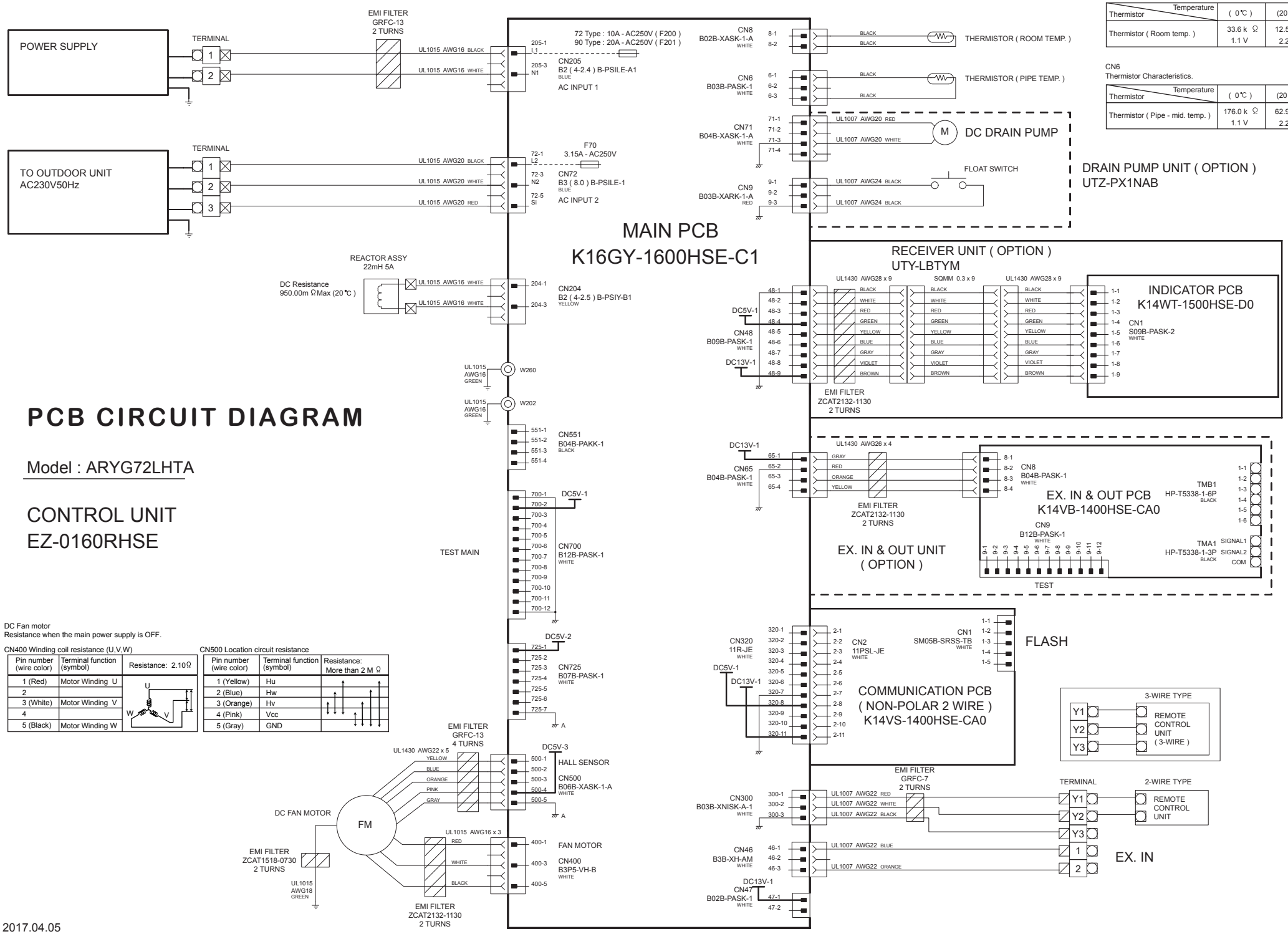

CN8
Thermistor Characteristics.

Thermistor \ Temperature	(0℃)	(20℃)	(30℃)
Thermistor (Room temp.)	33.6 k Ω 1.1 V	12.5 k Ω 2.2 V	8.0 k Ω 2.8 V

CN6
Thermistor Characteristics.

Thermistor \ Temperature	(0℃)	(20℃)	(30℃)
Thermistor (Pipe - mid. temp.)	176.0 k Ω 1.1 V	62.9 k Ω 2.2 V	39.6 k Ω 2.8 V

DC Fan motor
Resistance when the main power supply is OFF.

CN400 Winding coil resistance (U,V,W)

Pin number (wire color)	Terminal function (symbol)	Resistance: 2.10Ω
1 (Red)	Motor Winding U	
2		
3 (White)	Motor Winding V	
4		
5 (Black)	Motor Winding W	

CN500 Location circuit resistance

Pin number (wire color)	Terminal function (symbol)	Resistance: More than 2 M Ω
1 (Yellow)	Hu	
2 (Blue)	Hw	
3 (Orange)	Hv	
4 (Pink)	Vcc	
5 (Gray)	GND	

Model : AOYG72LRLA

Revision Code : A

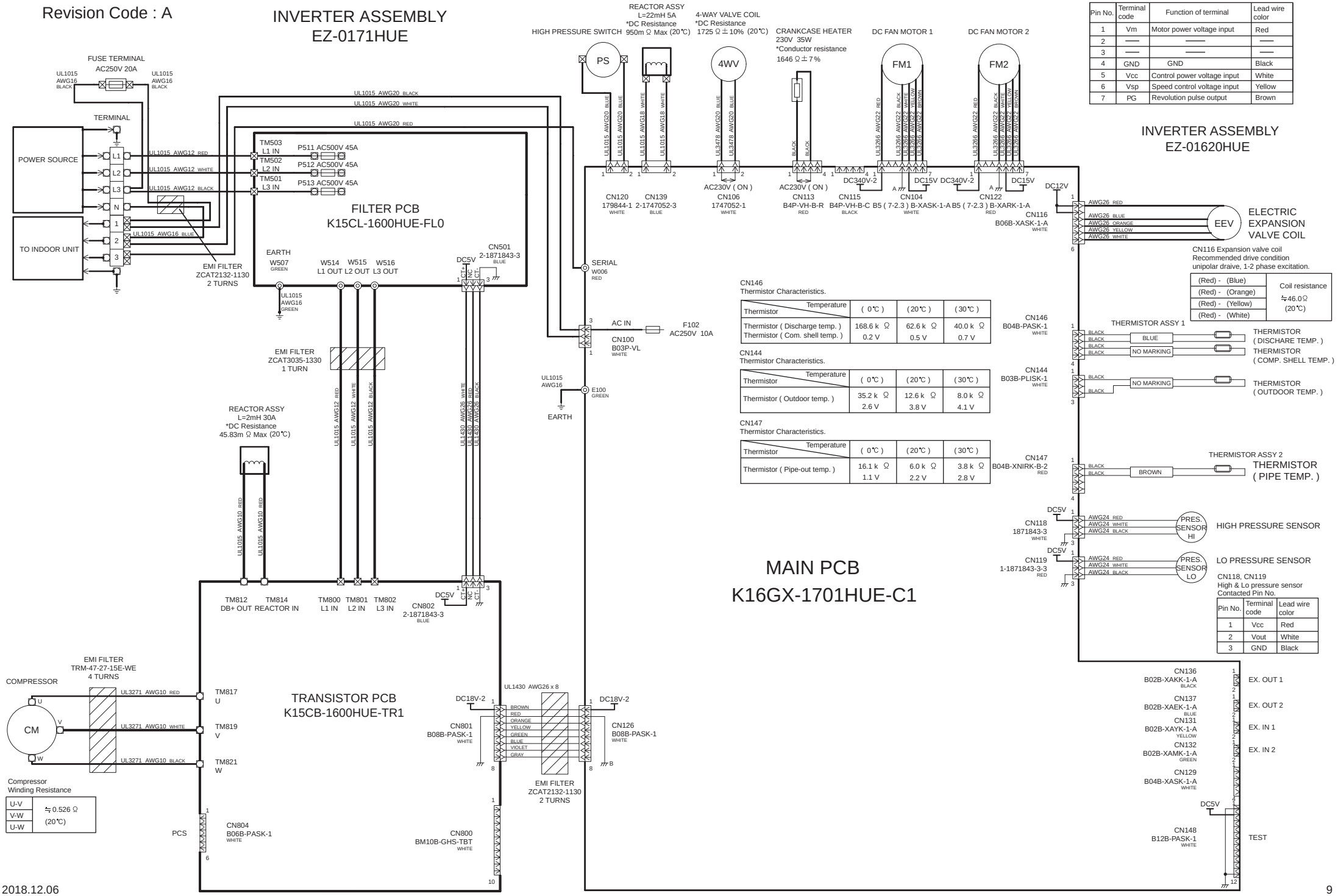

CN104, 122 DC Fan motor1 & 2

Pin No.	Terminal code	Function of terminal	Lead wire color
1	Vm	Motor power voltage input	Red
2	——	——	——
3	——	——	——
4	GND	GND	Black
5	Vcc	Control power voltage input	White
6	Vsp	Speed control voltage input	Yellow
7	PG	Revolution pulse output	Brown

CN116 Expansion valve coil
Recommended drive condition
unipolar draive, 1-2 phase excitation.

(Red) - (Blue)	Coil resistance ≒46.0Ω (20℃)
(Red) - (Orange)	
(Red) - (Yellow)	
(Red) - (White)	

CN146
Thermistor Characteristics.

Thermistor \ Temperature	(0℃)	(20℃)	(30℃)
Thermistor (Discharge temp.)	168.6 k Ω	62.6 k Ω	40.0 k Ω
Thermistor (Com. shell temp.)	0.2 V	0.5 V	0.7 V

CN144
Thermistor Characteristics.

Thermistor \ Temperature	(0℃)	(20℃)	(30℃)
Thermistor (Outdoor temp.)	35.2 k Ω 2.6 V	12.6 k Ω 3.8 V	8.0 k Ω 4.1 V

CN147
Thermistor Characteristics.

Thermistor \ Temperature	(0℃)	(20℃)	(30℃)
Thermistor (Pipe-out temp.)	16.1 k Ω 1.1 V	6.0 k Ω 2.2 V	3.8 k Ω 2.8 V

CN118, CN119
High & Lo pressure sensor
Contacted Pin No.

Pin No.	Terminal code	Lead wire color
1	Vcc	Red
2	Vout	White
3	GND	Black

Model : AOYG72LRLA

Revision Code : None

INVERTER ASSEMBLY
EZ-0161YHUE

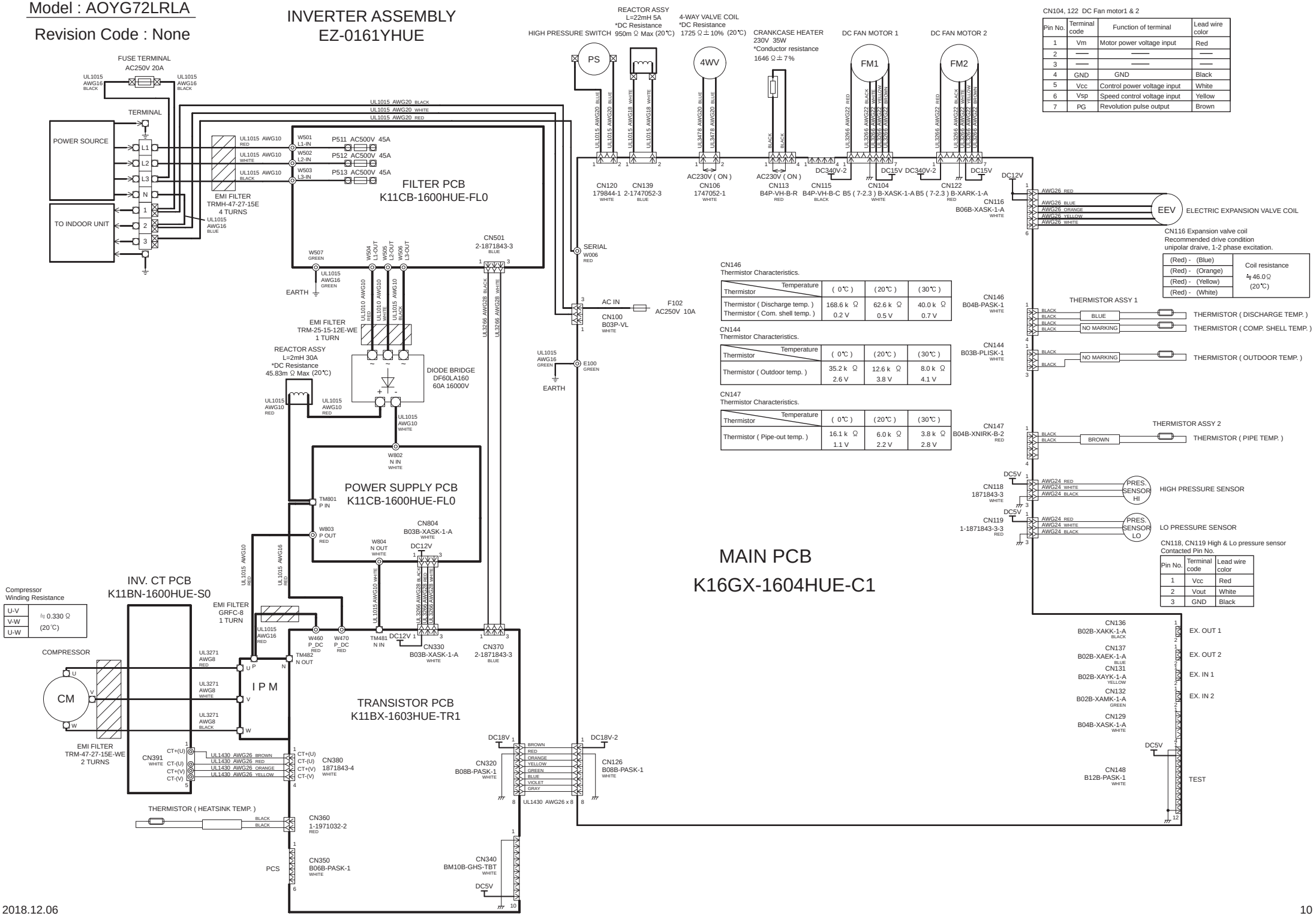

CN104, 122 DC Fan motor1 & 2

Pin No.	Terminal code	Function of terminal	Lead wire color
1	Vm	Motor power voltage input	Red
2	——	——	——
3	——	——	——
4	GND	GND	Black
5	Vcc	Control power voltage input	White
6	Vsp	Speed control voltage input	Yellow
7	PG	Revolution pulse output	Brown

CN146
Thermistor Characteristics.

Thermistor \ Temperature	(0℃)	(20℃)	(30℃)
Thermistor (Discharge temp.)	168.6 k Ω	62.6 k Ω	40.0 k Ω
Thermistor (Com. shell temp.)	0.2 V	0.5 V	0.7 V

CN144
Thermistor Characteristics.

Thermistor \ Temperature	(0℃)	(20℃)	(30℃)
Thermistor (Outdoor temp.)	35.2 k Ω	12.6 k Ω	8.0 k Ω
	2.6 V	3.8 V	4.1 V

CN147
Thermistor Characteristics.

Thermistor \ Temperature	(0℃)	(20℃)	(30℃)
Thermistor (Pipe-out temp.)	16.1 k Ω	6.0 k Ω	3.8 k Ω
	1.1 V	2.2 V	2.8 V

Compressor
Winding Resistance

U-V	≒ 0.330 Ω
V-W	(20℃)
U-W	

CN118, CN119 High & Lo pressure sensor
Contacted Pin No.

Pin No.	Terminal code	Lead wire color
1	Vcc	Red
2	Vout	White
3	GND	Black

ERROR DETECTION

INDOOR UNIT

If you use a wired type remote control,
error codes will appear on the remote control display.
If you use a wireless remote control,
the lamps on the IR receiver unit will output error codes by way of blinking patterns.
See the lamp blinking patterns and error codes in the table below.
An error display is displayed only during operation.
For more details, refer to the installation manual of the remote control.

Error display			Wired remote control Error code	Description
OPERATION lamp (green)	TIMER lamp (orange)	ECONOMY lamp (green)		
●(1)	●(1)	◇	11	Serial communication error
●(1)	●(2)	◇	12	Wired remote control communication error
●(1)	●(5)	◇	15	Check run unfinished Automatic airflow adjustment error
●(1)	●(6)	◇	16	Peripheral unit transmission PCB connection error
●(1)	●(8)	◇	18	External communication error
●(2)	●(1)	◇	21	Unit number or Refrigerant circuit address setting error [Simultaneous Multi]
●(2)	●(2)	◇	22	Indoor unit capacity error
●(2)	●(3)	◇	23	Combination error
●(2)	●(4)	◇	24	• Connection unit number error (indoor secondary unit) [Simultaneous Multi] • Connection unit number error (indoor unit or branch unit) [Flexible Multi]
●(2)	●(6)	◇	26	Indoor unit address setting error
●(2)	●(7)	◇	27	Primary unit, secondary unit setup error [Simultaneous Multi]
●(2)	●(9)	◇	29	Connection unit number error in wired remote controller system
●(3)	●(1)	◇	31	Power supply interruption error
●(3)	●(2)	◇	32	Indoor unit PCB model information error
●(3)	●(3)	◇	33	Indoor unit motor electricity consumption detection error
●(3)	●(5)	◇	35	Manual auto switch error
●(3)	●(9)	◇	39	Indoor unit power supply error for fan motor
●(3)	●(10)	◇	3A	Indoor unit communication circuit (wired remote controller) error
●(4)	●(1)	◇	41	Room temp. sensor error
●(4)	●(2)	◇	42	Indoor unit heat ex. middle temp. sensor error
●(4)	●(4)	◇	44	Human sensor error
●(5)	●(1)	◇	51	Indoor unit fan motor error
●(5)	●(3)	◇	53	Drain pump error
●(5)	●(7)	◇	57	Damper error
●(5)	●(15)	◇	5U	Indoor unit error
●(6)	●(1)	◇	61	Outdoor unit reverse/missing phase and wiring error
●(6)	●(2)	◇	62	Outdoor unit main PCB model information error or communication error

Error display			Wired remote control Error code	Description
OPERATION lamp (green)	TIMER lamp (orange)	ECONOMY lamp (green)		
●(6)	●(3)	◇	63	Inverter error
●(6)	●(4)	◇	64	Active filter error, PFC circuit error
●(6)	●(5)	◇	65	Trip terminal L error
●(6)	●(8)	◇	68	Outdoor unit rush current limiting resister temp. rise error
●(6)	●(10)	◇	6A	Display PCB microcomputers communication error
●(7)	●(1)	◇	71	Discharge temp. sensor error
●(7)	●(2)	◇	72	Compressor temp. sensor error
●(7)	●(3)	◇	73	Outdoor unit Heat Ex. liquid temp. sensor error
●(7)	●(4)	◇	74	Outdoor temp. sensor error
●(7)	●(5)	◇	75	Suction Gas temp. sensor error
●(7)	●(6)	◇	76	• 2-way valve temp. sensor error • 3-way valve temp. sensor error
●(7)	●(7)	◇	77	Heat sink temp. sensor error
●(8)	●(2)	◇	82	• Sub-cool Heat Ex. gas inlet temp. sensor error • Sub-cool Heat Ex. gas outlet temp. sensor error
●(8)	●(3)	◇	83	Liquid pipe temp. sensor error
●(8)	●(4)	◇	84	Current sensor error
●(8)	●(6)	◇	86	• Discharge pressure sensor error • Suction pressure sensor error • High pressure switch error
●(9)	●(4)	◇	94	Trip detection
●(9)	●(5)	◇	95	Compressor rotor position detection error (permanent stop)
●(9)	●(7)	◇	97	Outdoor unit fan motor 1 error
●(9)	●(8)	◇	98	Outdoor unit fan motor 2 error
●(9)	●(9)	◇	99	4-way valve error
●(9)	●(10)	◇	9A	Coil (expansion valve) error
●(10)	●(1)	◇	A1	Discharge temp. error
●(10)	●(3)	◇	A3	Compressor temp. error
●(10)	●(4)	◇	A4	High pressure error
●(10)	●(5)	◇	A5	Low pressure error
●(13)	●(2)	◇	J2	Branch boxes error [Flexible Multi]

Display mode ● : 0.5s ON / 0.5s OFF
◇ : 0.1s ON / 0.1s OFF
( ) : Number of flashing

OUTDOOR UNIT
ERROR CODE DISPLAY

You can determine the operating status by the lighting up and blinking of the LED lamp.

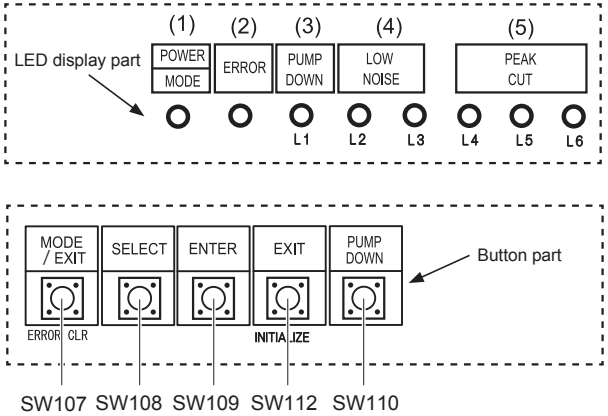

Display when an error occurs

POWER MODE	ERROR	PUMP DOWN (L1)	LOW NOISE (L2)	LOW NOISE (L3)	PEAK CUT (L4)	PEAK CUT (L5)	PEAK CUT (L6)
●	Blink (Hi speed)	○	○	○	○	○	○

Sign "○": Lights off, "●": Lights on

Check that the "ERROR" LED blinks, then press the [ENTER] button once.

Display mode ● : Lights on
○ : Lights off
◆ : Blink (0.5s Lights on / 0.5s Lights off)
( ) : Number of flashing

Error code check table

LED display								DESCRIPTION	REMARK
POWER/ MODE	ERROR	PUMP DOWN (L1)	LOW NOISE (L2)	LOW NOISE (L3)	PEAK CUT (L4)	PEAK CUT (L5)	PEAK CUT (L6)		
◆(2)	●	◆(1)	◆(1)	○	○	●	●	Serial communication error	Serial forward transmission error immediately after operation
◆(2)	●	◆(1)	◆(1)	○	●	○	○		Serial forward transmission error during operation
◆(2)	●	◆(2)	◆(2)	○	○	○	●	Indoor unit capacity error	Indoor unit capacity error
◆(2)	●	◆(5)	◆(15)	○	○	○	●	Indoor unit error	Indoor unit error
◆(2)	●	◆(6)	◆(2)	○	○	○	●	Outdoor unit main PCB error	Outdoor unit PCB model information error
◆(2)	●	◆(6)	◆(3)	○	○	○	●	Inverter PCB error	Inverter error
◆(2)	●	◆(6)	◆(5)	○	○	●	●	IPM error	Trip terminal L error
◆(2)	●	◆(7)	◆(1)	○	○	○	●	Discharge temp. sensor error	Discharge temp. sensor 1 error
◆(2)	●	◆(7)	◆(2)	○	○	○	●	Compressor temp. sensor error	Compressor temp. sensor 1 error
◆(2)	●	◆(7)	◆(3)	○	○	●	○	Outdoor unit Heat Ex. sensor error	Heat Ex. middle temp. sensor error
◆(2)	●	◆(7)	◆(3)	○	○	●	●		Outdoor unit Heat Ex. liquid temp. sensor error
◆(2)	●	◆(7)	◆(4)	○	○	○	●	Outdoor temp. sensor error	Outdoor temp. sensor error
◆(2)	●	◆(7)	◆(7)	○	○	○	●	Heat sink temp. sensor error	Heat sink temp. sensor error
◆(2)	●	◆(8)	◆(4)	○	○	○	●	Current sensor error	Current sensor 1 error (stoppage permanently)
◆(2)	●	◆(8)	◆(6)	○	●	○	○	Pressure sensor error	High pressure switch 1 error
◆(2)	●	◆(8)	◆(6)	○	○	○	●		Outdoor unit discharge pressure sensor error
◆(2)	●	◆(8)	◆(6)	○	○	●	●		Outdoor unit suction pressure sensor error
◆(2)	●	◆(9)	◆(4)	○	○	○	●	Trip detection	Trip detection
◆(2)	●	◆(9)	◆(5)	○	○	○	●	Compressor motor control error	Rotor position detection error (stoppage permanently)
◆(2)	●	◆(9)	◆(7)	○	○	●	●	Outdoor unit fan motor 1 error	Duty error
◆(2)	●	◆(9)	◆(8)	○	○	●	●	Outdoor unit fan motor 2 error	Duty error
◆(2)	●	◆(9)	◆(9)	○	○	○	●	4-way valve error	4-way valve error
◆(2)	●	◆(10)	◆(1)	○	○	○	●	Discharge temp. 1 error	Discharge temp. 1 error
◆(2)	●	◆(10)	◆(3)	○	○	○	●	Compressor temp. error	Compressor 1 temp. error
◆(2)	●	◆(10)	◆(5)	○	○	○	●	Pressure error 2	Low pressure error

PARTS

INDOOR UNIT
ARHG72LHTA

Ref.	Description	Part number
1	Remote control	9381009039
2	Hose sub assy	9378450196
3	Drain pan sub assy	9381752010
4	Casing B sub assy	9381829026
5	Room thermistor	9703299278
6	Pipe thermistor	9900892012

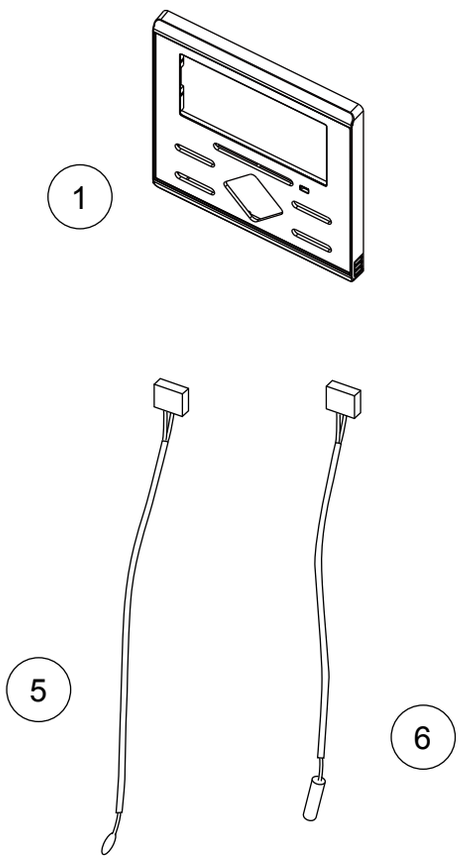

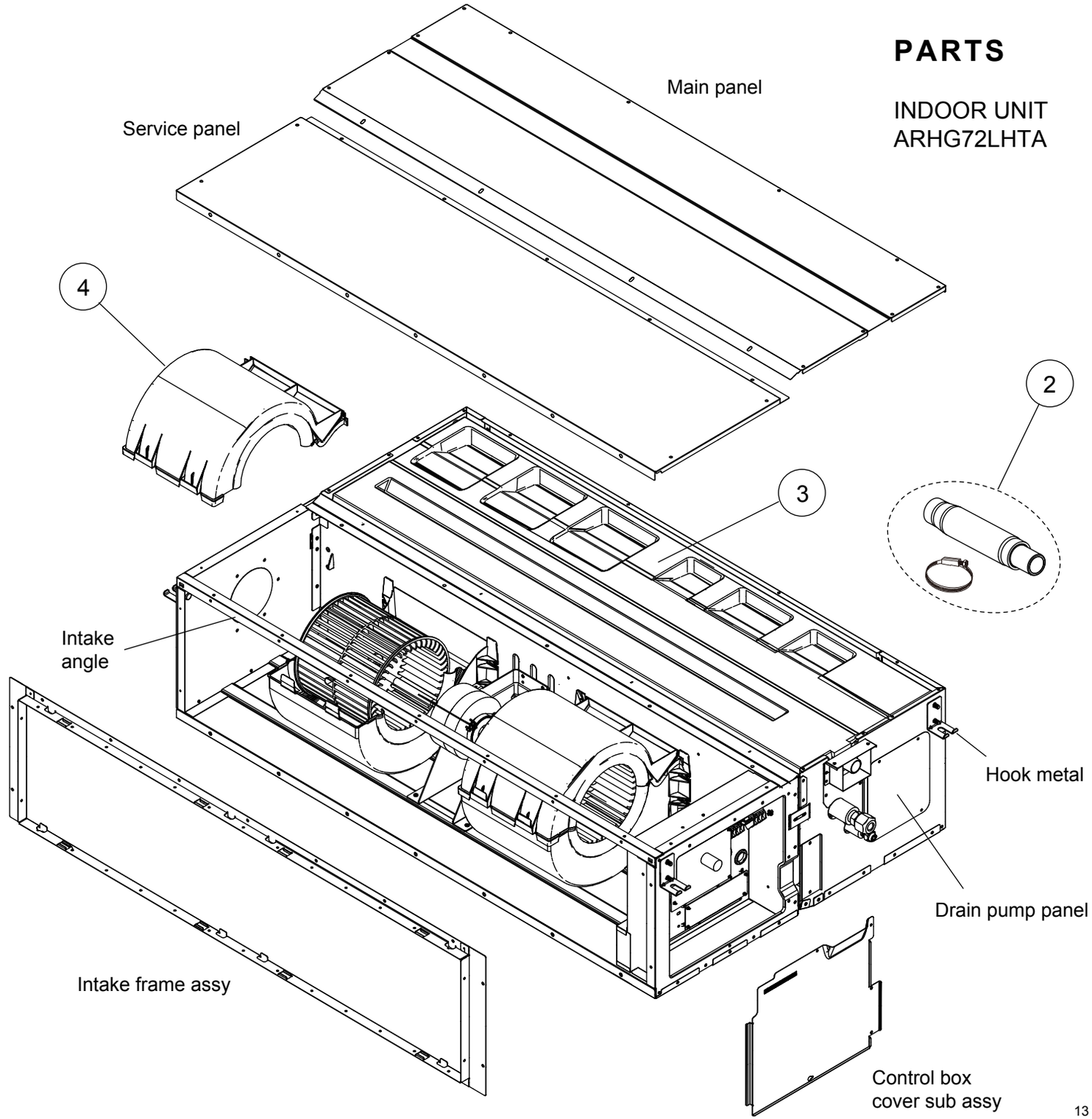

INDOOR UNIT
ARHG72LHTA

Ref.	Description	Part number
11	Heatsink	9382646004
12	Main PCB	9710630026
13	Communication PCB	9710019005
14	Terminal (remote)	9900896003
15	Terminal (serial)	9900568009
16	Terminal (power)	9703873027
17	Reactor assy	9900711016

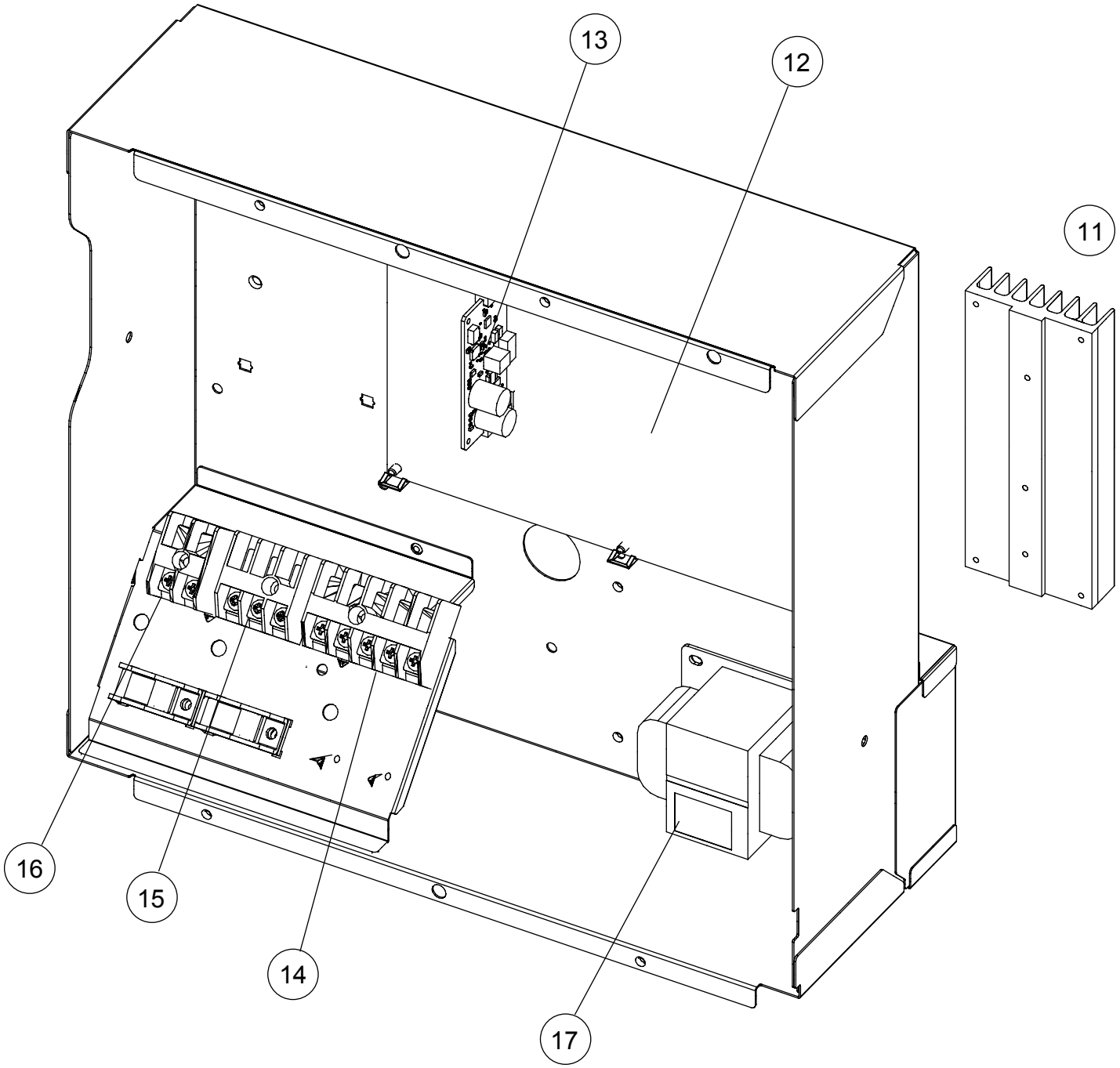

Ref.	Description	Part number
21	Fan motor	9603566012
22	Sirocco fan assy	9381440016
23	Casing A	9381561001
24	Evaporator total assy	9374517800

INDOOR UNIT
ARHG72LHTA

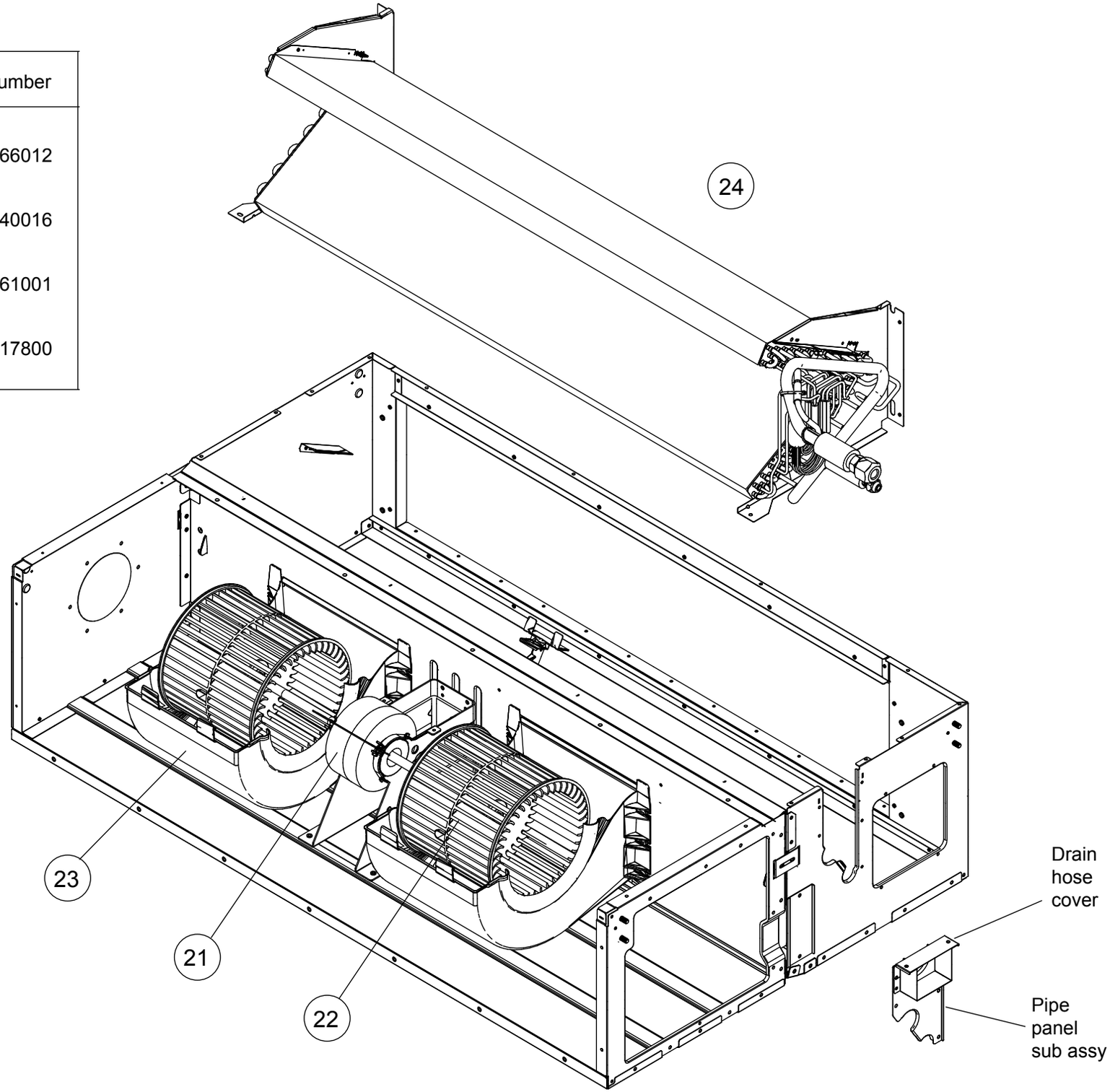

INDOOR UNIT
ARHG72LHTA

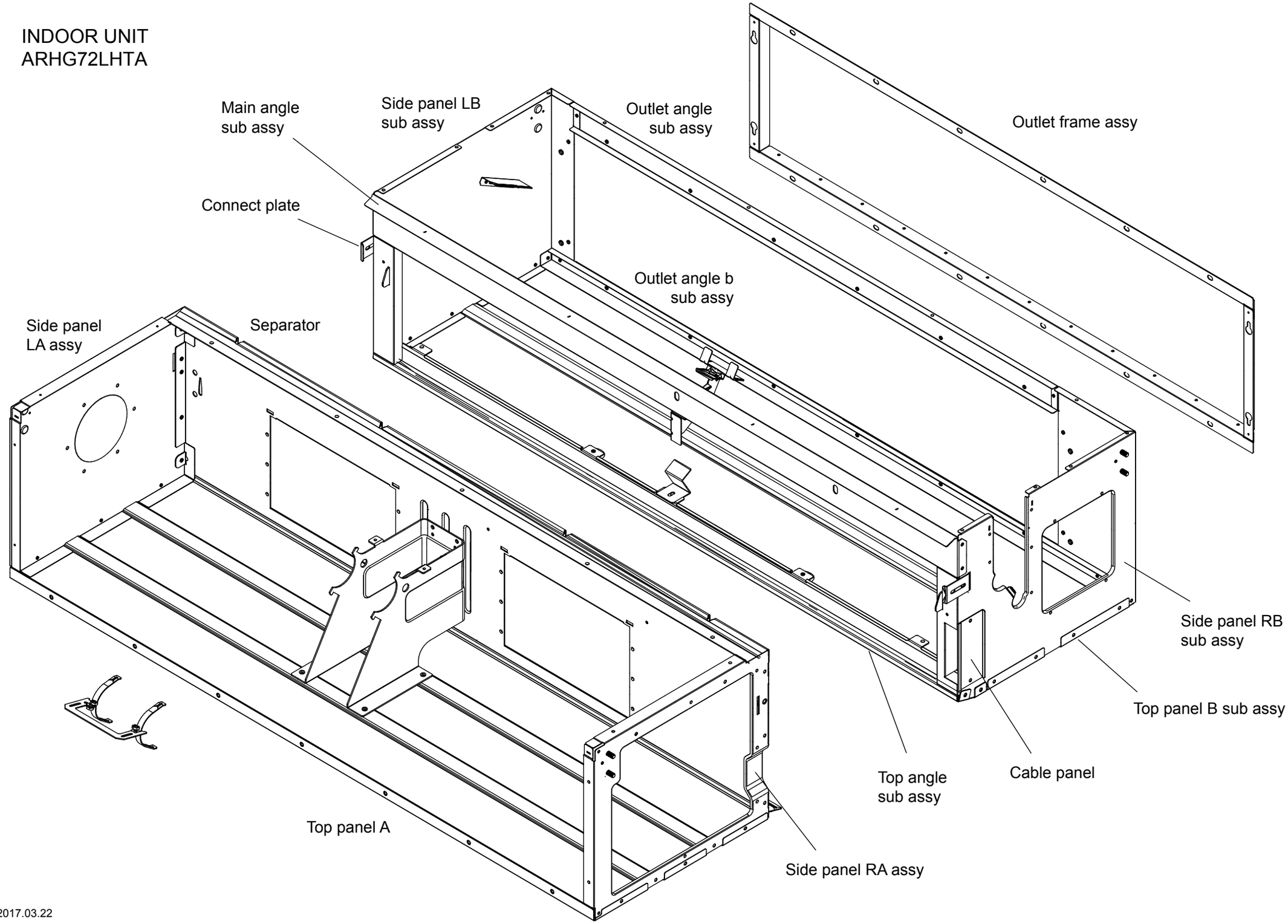

CAUTION

We will change the specification of parts.
With this change, we will not change the MODEL NAME of the product.
Instead, add the revision code to the nameplate.
As a result, the parts list of the service parts will be changed.

	Serial No.
Revision code : None	R000001 ~ R099999
Revision code : A	R100001 ~ R199999

Please identify it by serial number and revision code.

Carton label

Revision Code : None

Revision Code : A

Label rating

Revision Code : None

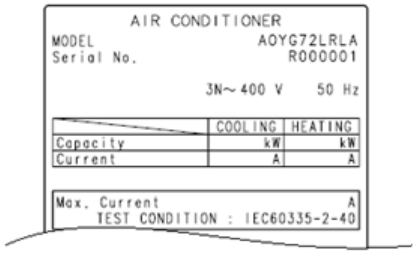

Revision Code : A

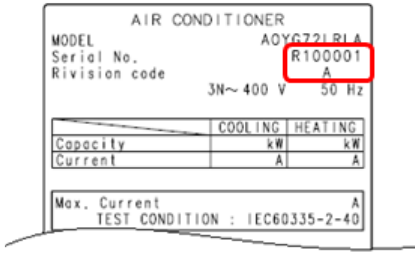

Leaflet attached with service parts

Confirm the serial number before exchange parts.

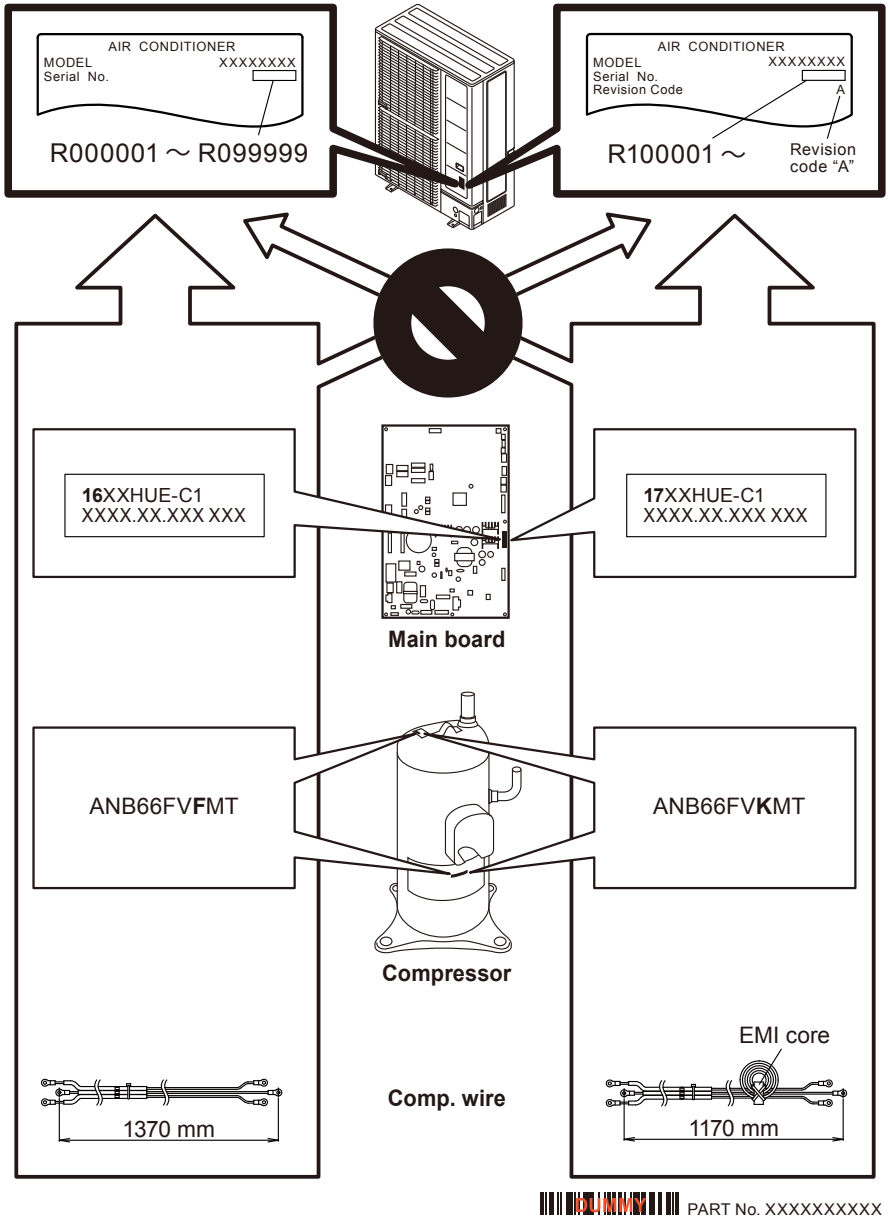

Change parts list

Ref. No.	Description		Revision code : None	Revision code : A	Remarks
	name	note			
24	MAIN PCB	(service unit)	9710851025 K16GX-1604SUE-C1	9710851056 K16GX-1701SUE-C1	Leaflet ※ attached
32	FILTER PCB		9709919033 K11CB-1600HUE-FL0	9710417016 K15CL-1600HUE-FL0	
33	POWER PCB		9710771019 K16HC-1601HUE-P0	None	
34	POWER PCB HOLDER		9382541002 PPE/PS 5VA	None	
41	POWER DIODE		0001113013 DF60LA160	None	
42	CT PCB		9708938028 K11BN-1600HUE-S0	None	
43	REACTOR ASSY(INV)		9900748012 30A 2MH L390 DPC	9900748005 30A 2MH DPC	
44	INVERTER PCB	(service unit)	9709682012 K11BX-1603HUE-TR1-SV	9709682098 K15CB-1600HUE-TR1-SV	
45	HEAT SINK A		9382538002 A6063S	9382538019 A6063S	
46	HEAT SINK B		9382539009 A6063S	None	
-	HEAT SINK THERMISTOR		9900518004 PT2EP-41F-F1-1	None	
79	COMPRESSOR SUB ASSY	(service unit)	9382796006 ANB66FVFMT	9382796013 ANB66FVKMT	Leaflet ※ attached
NEW	WIRE(INVERTER COMP)	(service unit)	9382819002 AJ*072-090LELAH,BLACK	←	Packaged with new wire and old wire and Leaflet ※ attached
NEW	SEPARATE WALL SUB ASSY		9380567028 AJY108LELAH	9380567035 AJY072LELAH	
NEW	CONTROL BOX (INV PART) ASSY		9382453022 SPOT WELD	9382453015 SPOT WELD	

About original parts before revision change

If there are original parts (shaded in the table below) in parts inventory,please use for the product before revision change.
In the future, if ordered by the part number of the original part, we arrange it with a new part (red letters)

Description		Revision code [None]		Remarks
name	note	Original [Discontinue]	New	
COMPRESSOR SUB ASSY	service unit	9379228046 ANB66FVFMT	9382796006 ANB66FVFMT	
MAIN PCB [for 72 model]	service unit	9710757044 K16GX-1604HUE-C1	9710851025 K16GX-1604SUE-C1	For AO*G72LRLA, ROG72LRLA
MAIN PCB [for 90 model]	service unit	9710757051 K16GX-1605HUE-C1	9710851032 K16GX-1605SUE-C1	For AO*G90LRLA, ROG90LRLA

PARTS

OUTDOOR UNIT
AOHG72LRLA
Revision code : A
Revision code : None

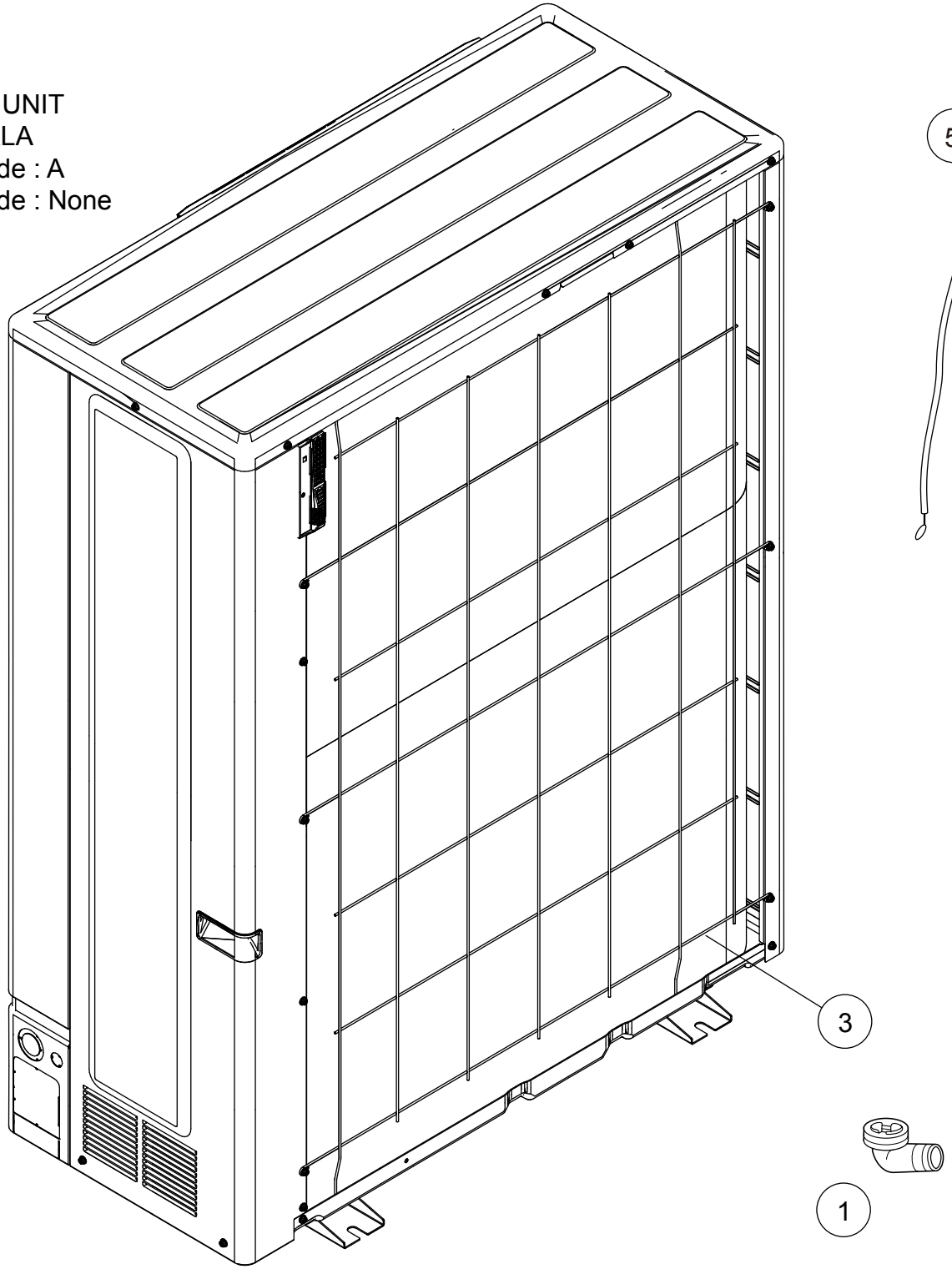

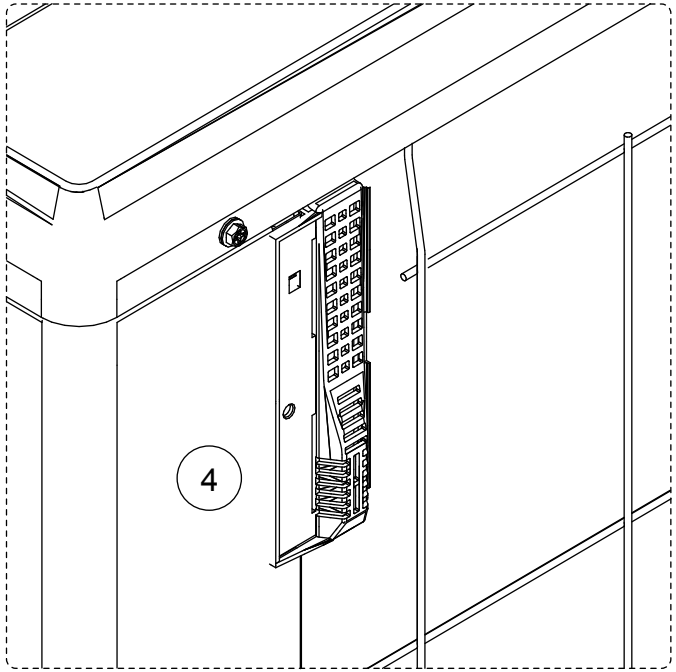

Ref.	Description	Parts number	
		Revision code : None	Revision code : A
1	Drain assy	9303029015	←
2	Drain cap	313166024302	←
3	Protective net assy	9378926066	←
4	Thermo holder	9375211011	←
5	Outdoor thermistor	9900957018	←

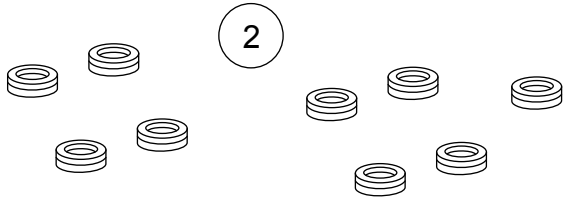

OUTDOOR UNIT
AOHG72LRLA
Revision code : A
Revision code : None

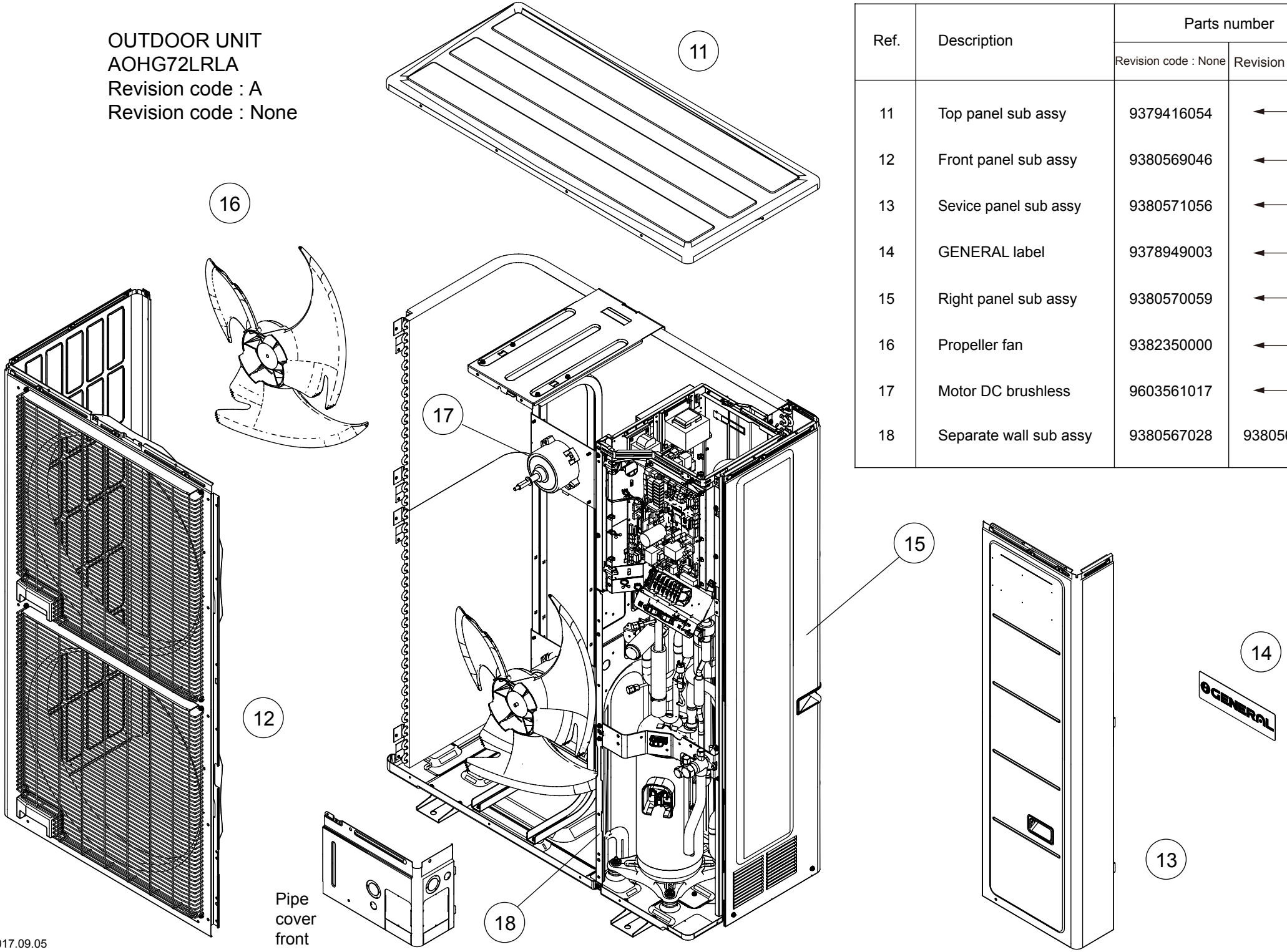

Ref.	Description	Parts number	
		Revision code : None	Revision code : A
11	Top panel sub assy	9379416054	←
12	Front panel sub assy	9380569046	←
13	Sevice panel sub assy	9380571056	←
14	GENERAL label	9378949003	←
15	Right panel sub assy	9380570059	←
16	Propeller fan	9382350000	←
17	Motor DC brushless	9603561017	←
18	Separate wall sub assy	9380567028	9380567035

Revision code : None

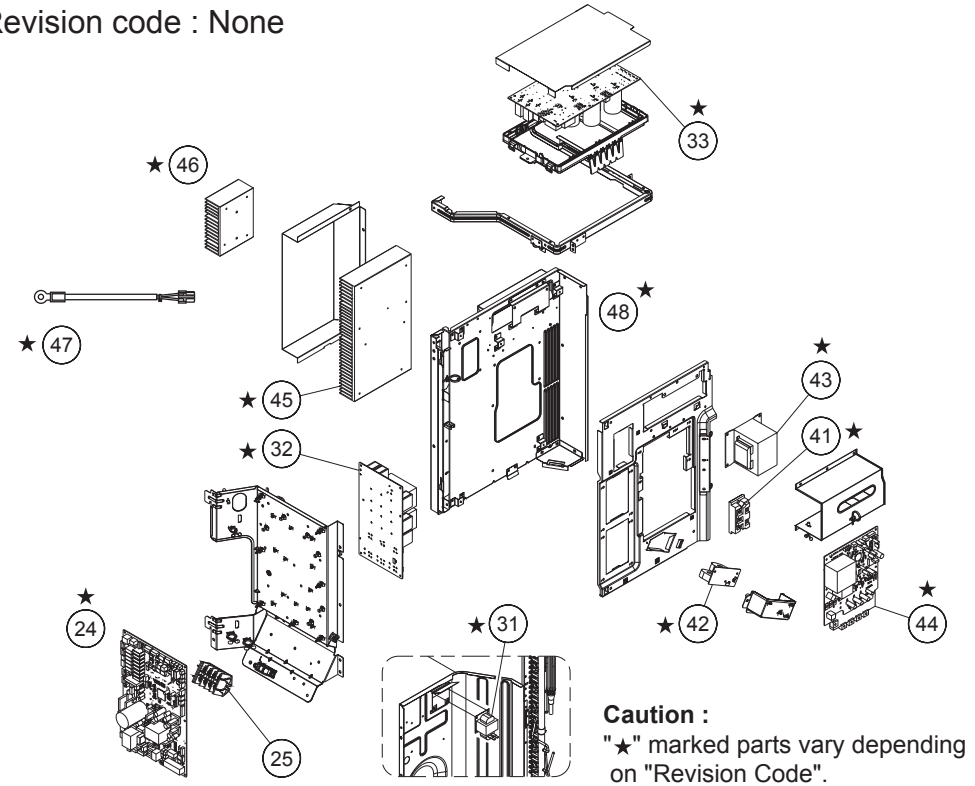

Caution :
"★" marked parts vary depending on "Revision Code".

Revision code : A

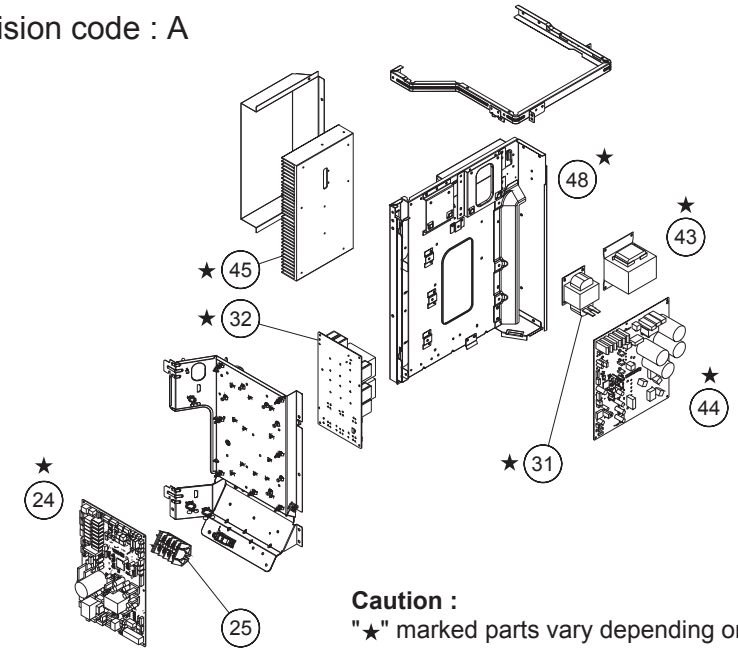

Caution :
"★" marked parts vary depending on "Revision Code".

OUTDOOR UNIT
AOHG72LRLA

Ref	Description	Parts number	
		Revision code : None	Revision code : A
24	Main PCB (service unit)	9710851025	9710851056
25	Terminal	9900569006	←
31	Reactor assy (main)	9900584016	←
32	Filter PCB	9709919033	9710417016
33	Power PCB	9710771019	None
41	Power diode	0001113013	None
42	CT PCB	9708938028	None
43	Reactor assy (inv)	9900748012	9900748005
44	Inverter PCB (service unit)	9709682012	9709682098
45	Heatsink A	9382538002	9382538019
46	Heatsink B	9382539009	None
47	Heatsink thermistor	9900518004	None
48	Control box (inv part) assy	9382453022	9382453015

OUTDOOR UNIT
AOHG72LRLA
Revision code : A
Revision code : None

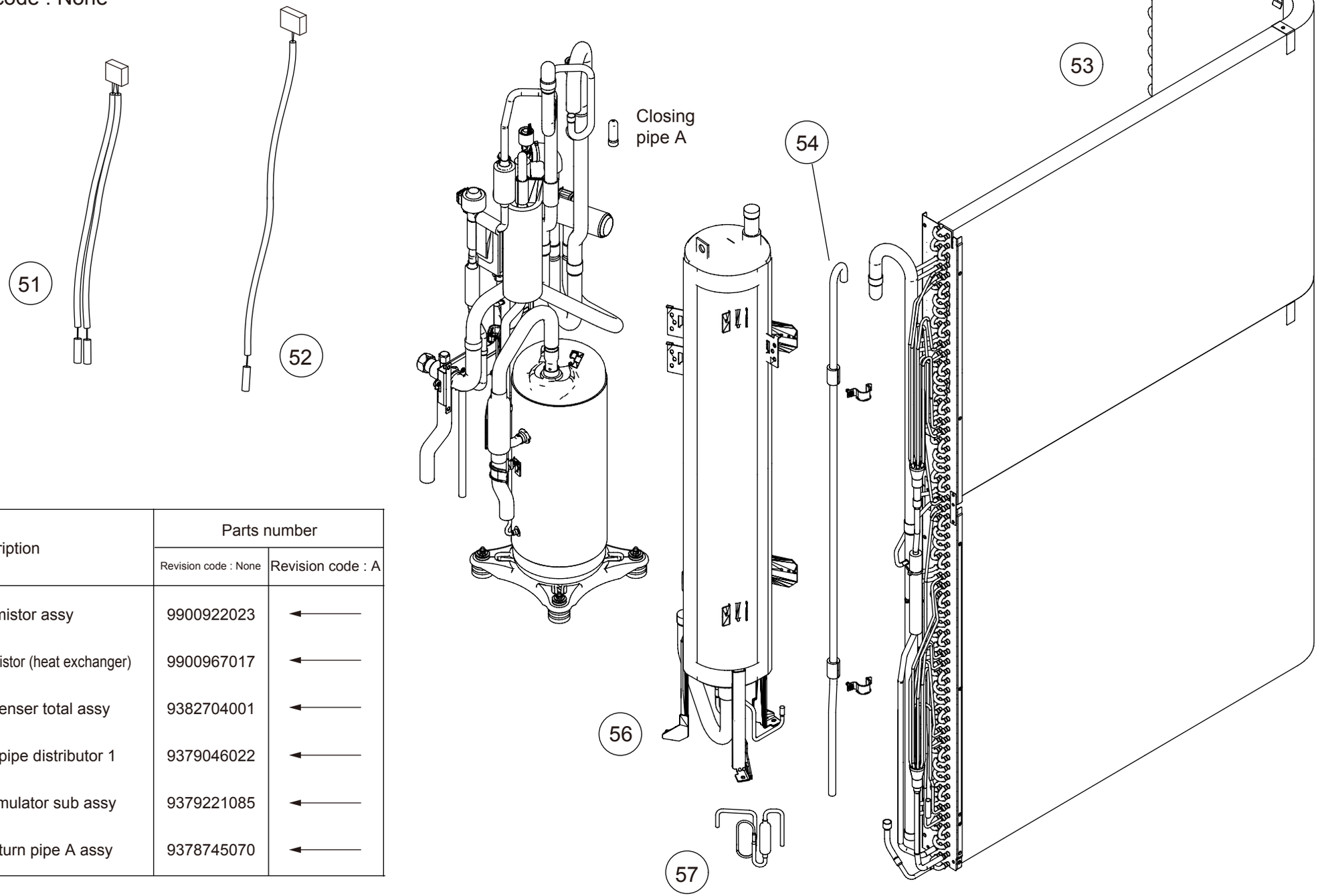

Ref.	Description	Parts number	
		Revision code : None	Revision code : A
51	Thermistor assy	9900922023	←
52	Thermistor (heat exchanger)	9900967017	←
53	Condenser total assy	9382704001	←
54	Joint pipe distributor 1	9379046022	←
56	Accumulator sub assy	9379221085	←
57	Oil return pipe A assy	9378745070	←

Ref.	Description	Parts number	
		Revision code : None	Revision code : A
61	Expansion valve coil	9970114007	←
62	Expansion valve assy	9378750173	←
63	3-way valve assy	9379039086	←
64	3-way valve assy	9379039062	←
65	Suction pipe A assy	9382716004	←
78	Wire (inverter comp) (service unit)	9382819002	←
79	Compressor sub assy (service unit)	9382796006	9382796013
80	Belt heater	9361140332	←

OUTDOOR UNIT
AOHG72LRLA
Revision code : A
Revision code : None

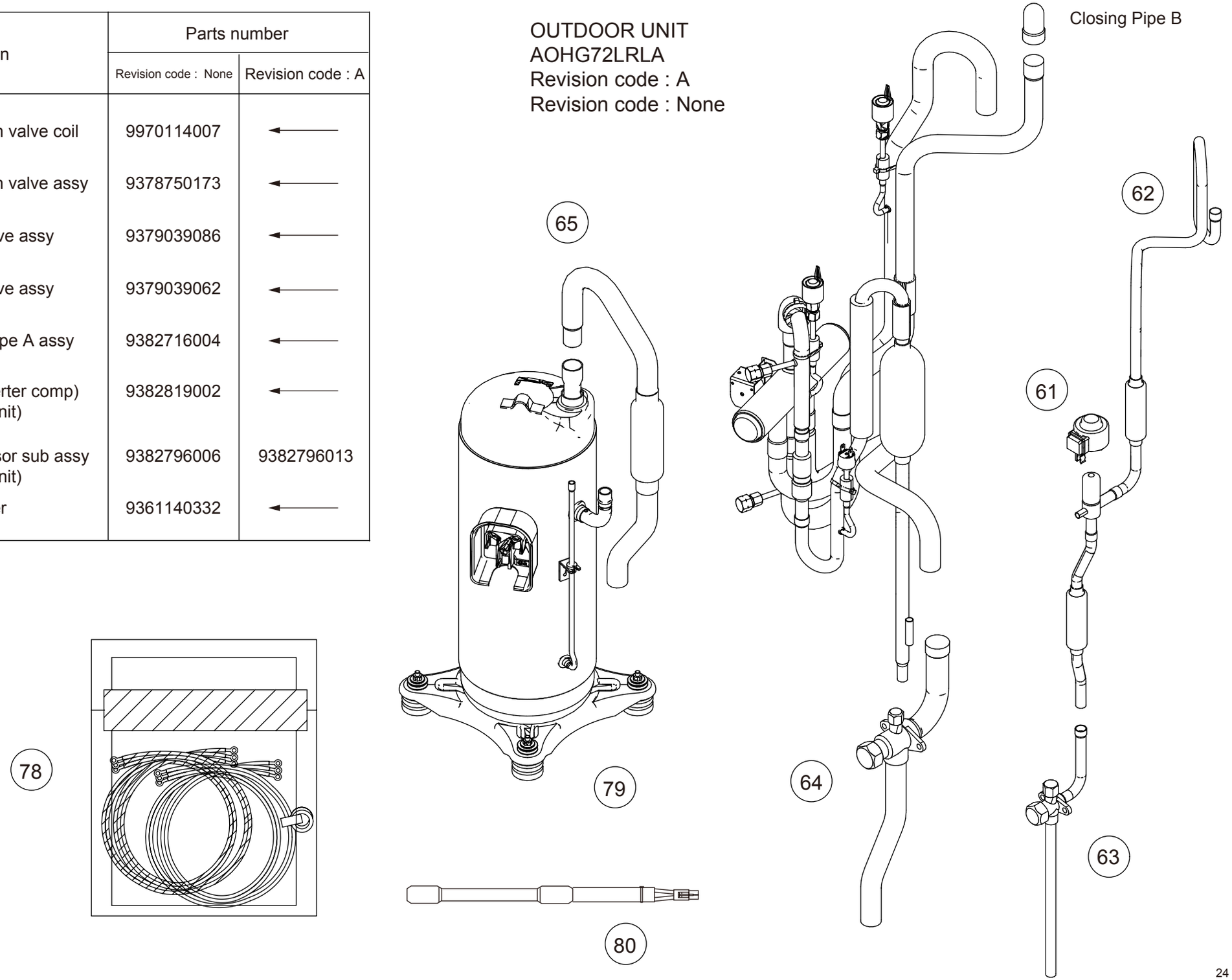

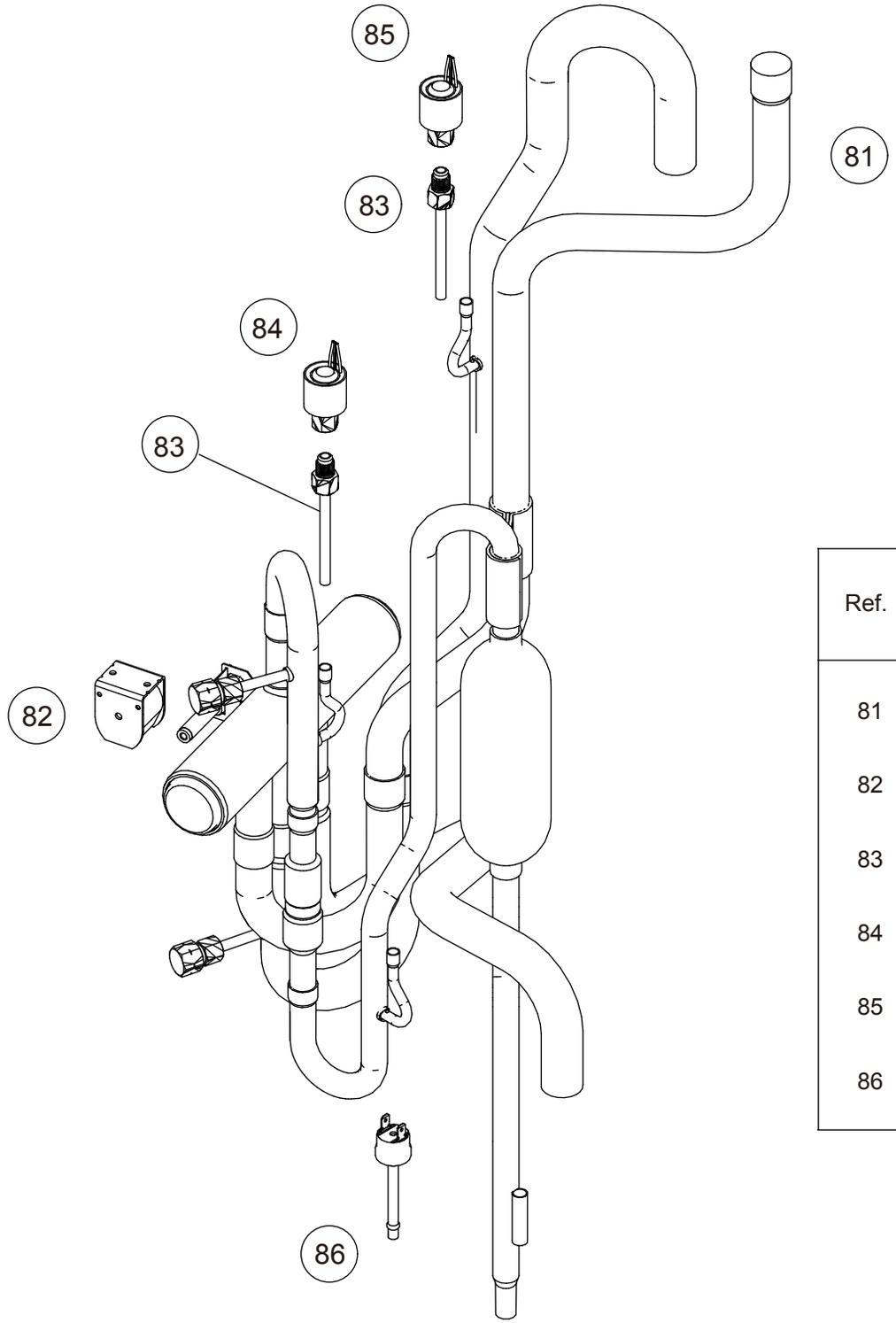

OUTDOOR UNIT
AOHG72LRLA
Revision code : A
Revision code : None

Ref.	Description	Parts number	
		Revision code : None	Revision code : A
81	4-way valve sub assy	9381449040	←
82	Solenoid	9970113017	←
83	Union joint	9970091018	←
84	High pressure sensor	9970178009	←
85	Low pressure sensor	9970178016	←
86	Pressure switch	9900186029	←

ACCESSORIES

INDOOR UNIT

Name and Shape	Q'ty	Description
Special nut A (large flange)	4	For suspending the indoor unit from ceiling
Special nut B (small flange)	4	
Washer	8	
Coupler heat insulation (large)	1	For indoor side pipe joint (gas pipe)
Coupler heat insulation (small)	1	For indoor side pipe joint (liquid pipe)
Cable tie (large)	4	For fixing the heat insulation
Cable tie (medium)	1	For fixing the remote controller cable
Cable tie (small)	1	For fixing the remote controller cable
Remote controller (UTY-RNR∗Z∗)	1	For air conditioner operation (For 36/45/54 type)
Remote controller (UTY-RLR∗Z∗)	1	For air conditioner operation (For 72/90 type)
Remote controller accessories	1 set	See installation manual for remote controller
Drain hose insulation	1	Insulates the drain hose and vinyl hose
Drain hose	1	For installing drain pipe VP25 (O.D.32, I.D.25)
Hose Band	1	For installing drain hose

OUTDOOR UNIT

Name and shape	Q'ty	Description
Drain cap	9	For outdoor unit drain piping work
Drain pipe	1	For outdoor unit drain piping work
Joint pipe A	1	For connecting gas pipe (L type)
Joint pipe B	1	For connecting gas pipe (Straight type)
Push mount cable tie	2	For binding connection cable
Grommet edging	2	For power supply cable and connection cable installation. Attach to the knockout hole.

1703G4600