Refrigerant R410A

INVERTER

AIRSTAGE™ J-IVS

Variable Refrigerant Flow System

DESIGN & TECHNICAL MANUAL

FUJITSU GENERAL LIMITED

CONTENTS

1. GENERAL INFORMATION

2. MODEL SELECTION

3. OUTDOOR UNITS

4. INDOOR UNITS

5. CONTROL SYSTEM

6. SYSTEM DESIGN

7. FUNCTION SETTINGS

8. EXTERNAL INPUT AND OUTPUT

9. NOTES

10. OPTIONAL PARTS

Refrigerant R410A

INVERTER

AIRSTAGE™

Variable Refrigerant Flow System

1. GENERAL INFORMATION

CONTENTS

1. GENERAL INFORMATION

1. Outdoor unit and indoor unit lineup 01-1
1-1. Outdoor units 01-1
1-2. Indoor units 01-2
2. Optional parts 01-7
2-1. Controllers 01-7
2-2. Adapter/Converter/Maintenance tool 01-11
2-3. Branch kit 01-13
2-4. EV kit 01-13
2-5. Cassette grille 01-14
2-6. Others 01-15

1. Outdoor unit and indoor unit lineup

NOTE: Information on models not mentioned here is available on our Pocket or Pocket Portal as the back number.

1-1. Outdoor units

■ Stand-alone

Lineup from 4 HP to 6 HP in 1 HP increments.

HP	Cooling capacity (kW)	Model name	Connectable indoor unit
4	12.1	AJ∗040LCLDH	1 to 11
5	14.0	AJ∗045LCLDH	1 to 12
6	15.1	AJ∗054LCLDH	1 to 13

■ Model designation

Column	1	2	3	4	5	6	7	8	9	10	11
Code	A	J	Y	0	4	0	L	C	L	D	H

Column	Item	Description
1	Type	AJ: Outdoor unit
2		
3	Brand	H: General Y: Fujitsu
4	Capacity	040: 12.1 kW
5		045: 14.0 kW
6		054: 15.1 kW
7	Function	L: Inverter
8	Function	C
9	Model change code	LD
10		
11	Series name	H

1-2. Indoor units

Type	Capacity															
kW	1.1	2.2	2.8	3.6	4.0/4.5	5.6	7.1	9.0	10.0	11.2	12.5	14.0	18.0	22.4	25.0	28.0
Model code	04	07	09	12	14	18	24	30	34	36	45	54	60	72	90	96
Compact cassette	•	•	•	•	•	•	•									
4-way flow cassette						•	•	•	•	•	•	•				
Circular flow cassette			•	•	•	•	•	•	•	•	•	•				
3D flow cassette						•	•									
One way flow cassette	•	•	•	•	•	•	•									
Low static pressure duct (Mini duct)	•	•	•	•	•	•	•									
Low static pressure duct (Slim duct) /Slim concealed floor		•	•	•	•	•	•									
Low static pressure duct (High efficiency)						•		•								
Medium static pressure duct							•	•		•	•					
High static pressure duct										•	•					
Compact floor	•	•	•	•	•											
Compact floor (EEV external) EV kit	•	•	•	•	•											
Floor/Ceiling				•	•	•	•									
Ceiling								•		•	•	•				
Wall mounted	•	•	•	•	•	•	•	•	•							
Wall mounted (EEV external) EV kit	•	•	•	•	•											

Type	Rated capacity (kW)		Model name	Dimensions	Remarks
	Cooling	Heating		H × W × D	
Compact cassette	1.1	1.3	AUXB004GLEH	245 × 570 × 570	Cassette grille: UTG-UF∗E-W UTG-UF∗C-W
	2.2	2.8	AUXB007GLEH		
	2.8	3.2	AUXB009GLEH		
	3.6	4.1	AUXB012GLEH		
	4.5	5.0	AUXB014GLEH		
	5.6	6.3	AUXB018GLEH		
	7.1	8.0	AUXB024GLEH		
4-way flow cassette	5.6	6.3	AUXD18GALH	246 × 840 × 840	Cassette grille: UTG-UG∗A-W
	7.1	8.0	AUXD24GALH		
	9.0	10.0	AUXA30GALH	288 × 840 × 840	
	10.0	11.2	AUXA34GALH		
	11.2	12.5	AUXA36GALH		
	12.5	14.0	AUXA45GALH		
	14.0	16.0	AUXA54GALH		
Circular flow cassette	2.8	3.2	AUXN009GLAH	246 × 840 × 840	Cassette grille: UTG-UK∗C-W UTG-UK∗A-B
	3.6	4.0	AUXN012GLAH		
	4.5	5.0	AUXN014GLAH		
	5.6	6.3	AUXM018GLEH		
	7.1	8.0	AUXM024GLEH		
	9.0	10.0	AUXM030GLEH		
	5.6	6.3	AUXK018GLEH	288 × 840 × 840	
	7.1	8.0	AUXK024GLEH		
	9.0	10.0	AUXK030GLEH		
	10.0	11.2	AUXK034GLEH		
	11.2	12.5	AUXK036GLEH		
	12.5	14.0	AUXK045GLEH		
	14.0	16.0	AUXK054GLEH		
3D flow cassette	5.6	6.3	AUXS018GLEH	200 × 1,240 × 500	Cassette grille: UTG-US∗A-W
	7.1	8.0	AUXS024GLEH		
One way flow cassette	1.1	1.3	AUXV004GLEH	198 × 785 × 570	Cassette grille: UTG-UN∗A-W
	2.2	2.8	AUXV007GLEH		
	2.8	3.2	AUXV009GLEH		
	3.6	4.0	AUXV012GLEH		
	4.5	5.0	AUXV014GLEH	198 × 1,190 × 570	Cassette grille: UTG-UN∗B-W
	5.6	6.3	AUXV018GLEH		
	7.1	8.0	AUXV024GLEH		
Low static pressure duct (Mini duct)	1.1	1.3	ARXK004GLGH	198 × 700 × 450	
	2.2	2.8	ARXK007GLGH		
	2.8	3.2	ARXK009GLGH		
	3.6	4.0	ARXK012GLGH		
	4.5	5.0	ARXK014GLGH		
	5.6	6.3	ARXK018GLGH	198 × 900 × 450	
	7.1	8.0	ARXK024GLGH	198 × 1,100 × 450	
Low static pressure duct (Slim duct) /Slim concealed floor	2.2	2.8	ARXD007GLEH	198 × 700 × 620	
	2.8	3.2	ARXD009GLEH		
	3.6	4.0	ARXD012GLEH		
	4.5	5.0	ARXD014GLEH		
	5.6	6.3	ARXD018GLEH	198 × 900 × 620	
	7.1	8.0	ARXD024GLEH	198 × 1,100 × 620	
Low static pressure duct (High efficiency)	5.6	6.3	ARXP018GLFH	270 × 1,135 × 700	
	9.0	10.0	ARXP030GLFH		

Type	Rated capacity (kW)		Model name	Dimensions	Remarks
	Cooling	Heating		H × W × D	
Medium static pressure duct	7.1	8.0	ARXA024GLEH	270 × 1,135 × 700	
	9.0	10.0	ARXA030GLEH		
	11.2	12.5	ARXA036GLEH		
	12.5	14.0	ARXA045GLEH		
High static pressure duct	11.2	12.5	ARXC036GTEH	400 × 1,050 × 500	
	12.5	14.0	ARXC045GTEH		
Compact floor	1.1	1.3	AG∗A004GCGH	600 × 740 × 200	
	2.2	2.8	AG∗A007GCGH		
	2.8	3.2	AG∗A009GCGH		
	3.6	4.0	AG∗A012GCGH		
	4.0	4.5	AG∗A014GCGH		
Compact floor (EEV external)	1.1	1.3	AG∗E004GCEH	600 × 740 × 200	EV kit: UTR-EV09XB
	2.2	2.8	AG∗E007GCEH		
	2.8	3.2	AG∗E009GCEH		
	3.6	4.0	AG∗E012GCEH		EV kit: UTR-EV14XB
	4.0	4.5	AG∗E014GCEH		
Floor/Ceiling	3.6	4.0	AB∗A012GTEH	199 × 990 × 655	
	4.5	5.0	AB∗A014GTEH		
	5.6	6.3	AB∗A018GTEH		
	7.1	8.0	AB∗A024GTEH		
Ceiling	9.0	10.0	AB∗A030GTEH	240 × 1,660 × 700	
	11.2	12.5	AB∗A036GTEH		
	12.5	14.0	AB∗A045GTEH		
	14.0	16.0	AB∗A054GTEH		
Wall mounted	1.1	1.3	AS∗A004GCGH	268 × 840 × 203	
	2.2	2.8	AS∗A007GCGH		
	2.8	3.2	AS∗A009GCGH		
	3.6	4.0	AS∗A012GCGH		
	4.0	4.5	AS∗A014GCGH		
	5.6	6.3	AS∗A18GBCH	320 × 998 × 238	
	7.1	8.0	AS∗A24GBCH		
	9.0	10.0	AS∗A030GTEH	340 × 1,150 × 280	
	10.0	11.2	AS∗A034GTEH		
Wall mounted (EEV external)	1.1	1.3	AS∗E004GCEH	268 × 840 × 203	EV kit: UTR-EV09XB
	2.2	2.8	AS∗E007GCEH		
	2.8	3.2	AS∗E009GCEH		
	3.6	4.0	AS∗E012GCEH		EV kit: UTR-EV14XB
	4.0	4.5	AS∗E014GCEH		

NOTES:

- For old models information, refer to the back number of this manual released before 2018 on our Pocket or Pocket Portal.
- Refer to the *DESIGN AND TECHNICAL MANUAL* for Air Handling Unit (AHU) regarding the contents of the AHU (e.g. AH∗A096GWAA).

GENERAL INFORMATION

■ Model designation

11-digit code type

Column	1	2	3	4	5	6	7	8	9	10	11
Code	A	U	X	K	0	5	4	G	L	E	H

Column	Item	Description
1 2	Type	AU: Cassette type AR: Duct type AG: Floor type AB: Floor/Ceiling or Ceiling type AS: Wall mounted type
3	Brand	H: General Y: Fujitsu X: Neutral brand
4	Model	A: Standard (AU, AS) B: Compact (AU) C: High static pressure (AR) D: Slim (AR) E: EEV external (AG, AS) K: Mini (AR), Standard (AU) M: Slim (AU) N: Slim (AU) P: High efficiency (AR) S: 3D flow (AU) V: One way flow cassette
5 6 7	Capacity	004: 1.1 kW 007: 2.2 kW 009: 2.8 kW 012: 3.6 kW 014: 4.5 kW 018: 5.6 kW 024: 7.1 kW 030: 9.0 kW 034: 10.0 kW 036: 11.2 kW 045: 12.5 kW 054: 14.0 kW
8	Function	G: Inverter
9 10	Model change code	2-digit combination of alphabet
11	Series name	H

GENERAL INFORMATION

10-digit code type

Column	1	2	3	4	5	6	7	8	9	10
Code	A	U	X	D	1	8	G	A	L	H

Column	Item	Description
1 2	Type	AU: Cassette type
3	Brand	X: Neutral brand
4	Model	A: Standard (AU) D: Slim (AU)
5 6	Capacity	18: 5.6 kW 24: 7.1 kW 30: 9.0 kW 34: 10.0 kW 36: 11.2 kW 45: 12.5 kW 54: 14.0 kW
7	Function	G: Inverter
8 9	Model change code	2-digit combination of alphabet
10	Series name	H

GENERAL INFORMATION

2. Optional parts

NOTES:

- Information on models not mentioned here is available on our Pocket or Pocket Portal as the back number.
- Refer to the *DESIGN AND TECHNICAL MANUAL* for DX kit regarding the contents of DX kit (e.g. UTY-VDGX [Control unit], UTP-VX30A [EEV unit]).

2-1. Controllers

■ Central control

Exterior	Part name	Model name	Summary
	System controller	UTY-APGXZ1	System controller realizes the advanced integrated monitoring & control of VRF network system from small scale buildings to large scale buildings. Optional: UTY-PEGXZ1, UTY-PPGXP2
	System controller lite	UTY-ALGXZ1	System controller lite has standard functions sufficient for air conditioner management in small and medium scale buildings. Optional: UTY-PLGXA2, UTY-PLGXR2, UTY-PLGXE2, UTY-PLGXP2, UTY-PLGXX2
	Touch panel controller	UTY-DTG∗Z1	Controls and monitors our air conditioner via LAN or Internet. Allows user or tenant to manage the air conditioning by using assigned equipment only such as their PCs or smart devices from anywhere. Optional: UTY-PTGXA
	Central remote controller	UTY-DCG∗Z∗	Central control of small and medium sized buildings and tenants. Central remote controller realizes the trouble support function, remote monitoring, and remote operation.
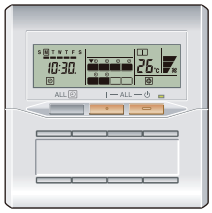	Group remote controller	UTY-CGG∗	Group control of indoor units with simple operation. Network converter (UTY-VGGXZ1) is required to connect Group remote controllers to a VRF network system.

■ Individual control

Exterior	Part name	Model name	Summary
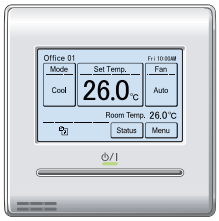	Wired remote controller (Touch panel)	UTY-RNR∗Z∗	Easy finger touch operation with LCD panel. Backlight LCD enables easy operation in a dark room. Wire type: Non-polar 2-wire

Exterior	Part name	Model name	Summary
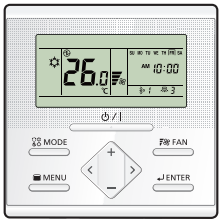	Wired remote controller	UTY-RLR∗	High visibility and easy operation. Room temperature can be accurately controlled using the built-in thermo sensor. Wire type: Non-polar 2-wire
	Wired remote controller	UTY-RCR∗Z1	High visibility and easy operation. Room temperature can be accurately controlled using the built-in thermo sensor. Wire type: Non-polar 2-wire
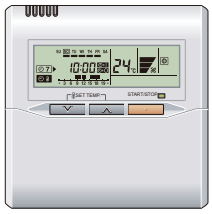	Wired remote controller	UTY-RNK∗	Room temperature can be controlled by detecting the temperature accurately with built-in thermo sensor. Wire type: Polar 3-wire
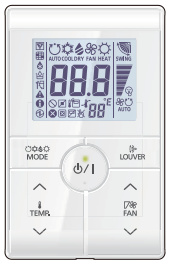	Simple remote controller	UTY-RSR∗	Compact remote controller concentrates on the basic functions such as Start/Stop, fan control, temperature setting, and operation mode. Wire type: Non-polar 2-wire
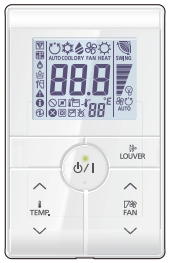	Simple remote controller (Without operation mode)	UTY-RHR∗	Compact remote controller concentrates on the basic functions such as Start/Stop, fan control, temperature setting. Wire type: Non-polar 2-wire
	Simple remote controller	UTY-RSK∗	Compact remote controller concentrates on the basic functions such as Start/Stop, fan control, temperature setting, and operation mode. Wire type: Polar 3-wire
	Simple remote controller (Without operation mode)	UTY-RHK∗	Compact remote controller concentrates on the basic functions such as Start/Stop, fan control, temperature setting. Wire type: Polar 3-wire

Exterior	Part name	Model name	Summary
	Wireless remote controller	UTY-LNH∗	Unit control is performed by wireless remote controller.

GENERAL INFORMATION

■ Model designation

Column	1	2	3	4	5	6	7	8	9	10
Code	U	T	Y	-	A	P	G	X	Z	1

Column	Item	Description
1	Series name	UTY: Control unit
2		
3		
4		
5	Type	APG: System controller ALG: System controller lite DTG: Touch panel controller DCG: Central remote controller CGG: Group remote controller RNR, RLR, RNK, RCR: Wired remote controller RSR, RHR, RSK, RHK: Simple remote controller LNH: Wireless remote controller
6		
7		
8	Brand	G: General Y: Fujitsu X: Neutral brand
9	Version	Z1, Z2, Z3
10		

2-2. Adapter/Converter/Maintenance tool

Exterior	Part name	Model name	Summary
	Network converter	UTY-VTGX	Split type systems can be controlled from a central controller via the converter.
	Network converter (AC power supply)	UTY-VTGXV	Split type systems can be controlled from a central controller via the converter.
	Network converter	UTY-VGGXZ1	Split type systems can be controlled from a central controller via the converter. Group remote controller can be controlled up to two refrigerant systems via the converter.
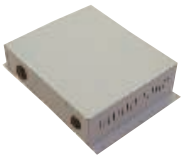	Network converter for LonWorks	UTY-VLGX	For connection between VRF network system and a LonWorks open network for management of small to medium-sized BMS.
	KNX converter for VRF	UTY-VKGX	For connection between VRF network system and a KNX open network.
	KNX converter for indoor unit	UTY-VKSX	For connection between Single split indoor unit and a KNX open network.
	Modbus converter for VRF	UTY-VMGX	For connection between VRF network system and a Modbus open network.
	Modbus converter for indoor unit	UTY-VMSX	For connection between Single split indoor unit and a Modbus open network.
	BACnet gateway (Hardware)	UTY-VBGX	For connection between VRF network system to the BMS system using BACnet protocol. Supports max. 128 indoor units.
	BACnet gateway (Software)	UTY-ABGXZ1	The central control of maximum 1,600 indoor units can be realized by connecting the VRF network system to the BACnet, a global standard for open network.

Exterior	Part name	Model name	Summary
	Wireless LAN adapter	UTY-TFSXZ1	Remotely manage an Air Conditioning system using mobile devices such as Smartphones, and tablets.
	Signal amplifier	UTY-VSGXZ1	If the total length of transmission line exceeds 500 m, or the number of units exceeds 64, a Signal amplifier will be necessary.
	External switch controller	UTY-TERX UTY-TEKX	Air conditioner switching can be controlled by connecting other external sensor switches.
	Service tool	UTY-ASGXZ1	Extensive monitoring and analysis functions for installation and maintenance. Operation status and error history can be grasped promptly and adequately.
	Web monitoring tool	UTY-AMGXZ1	Trouble free operation at all times by web monitoring system. The operation status of the VRF network system within the building can be monitored in real time over the Internet.

GENERAL INFORMATION

2-3. Branch kit

■ Separation tube

For 2 pipes	
Exterior	**Model name**
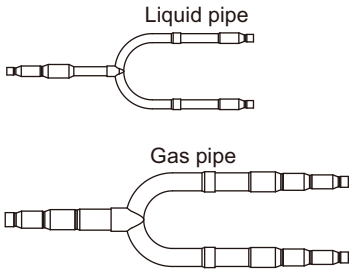	UTP-AX054A

■ Header

Exterior	Model name
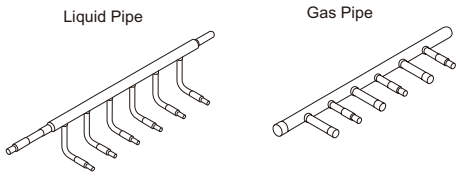	UTR-H0906L
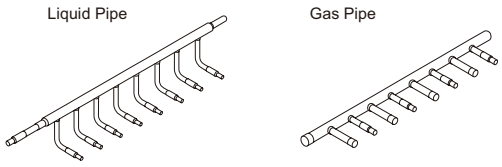	UTR-H0908L

2-4. EV kit

Exterior	Model name
For Wall mounted and Compact floor type (EEV external)	UTR-EV09XB UTR-EV14XB

2-5. Cassette grille

Exterior	Model name	Remarks
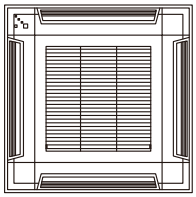 For Compact cassette type	UTG-UF∗E-W	Grid type grille
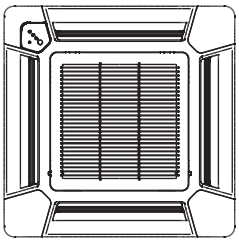 For Compact cassette type	UTG-UF∗C-W	Standard type grille
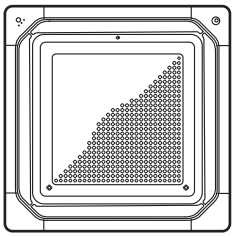 For Circular flow cassette type	UTG-UK∗C-W UTG-UK∗A-B	
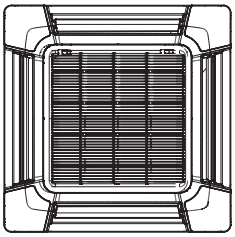 For 4-way flow cassette type	UTG-UG∗A-W	
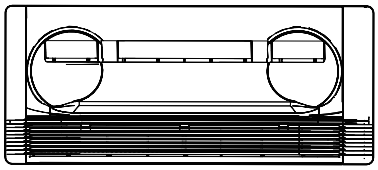 For 3D flow cassette type	UTG-US∗A-W	
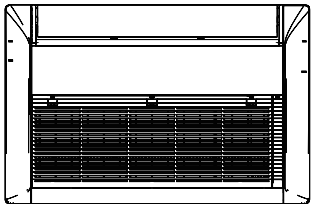 For One way flow cassette type	UTG-UN∗A-W	
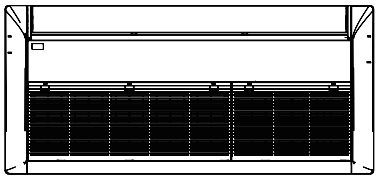 For One way flow cassette type	UTG-UN∗B-W	

2-6. Others

NOTE: For applicable indoor unit type, refer to "Applicable parts" in Chapter 10. OPTIONAL PARTS on page 10-17.

Exterior	Part name	Model name
	Flange (Square)	UTD-SF045T
	Flange (Round)	UTD-RF204
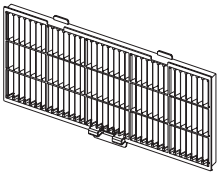 × 2 pcs	Long-Life filter	UTD-LF25NA
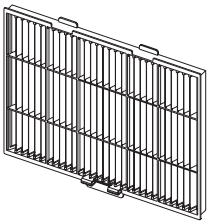 × 2 pcs	Long-Life filter	UTD-LF60KA
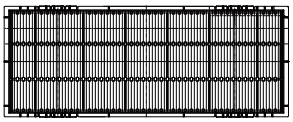 × 2 pcs	Long-Life filter	UTD-LFNA
	Drain pump unit	UTZ-PX1NBA
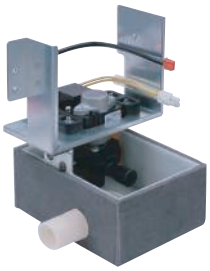	Drain pump unit	UTR-DPB24T
	Air outlet shutter plate	UTR-YDZB
	Air outlet shutter plate	UTR-YDZK

GENERAL INFORMATION

Exterior	Part name	Model name
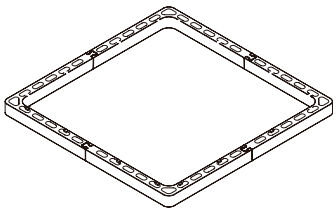	Panel spacer	UTG-BKXA-W
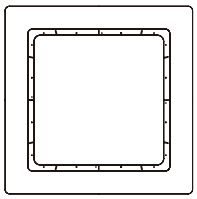	Wide panel	UTG-AKXA-W
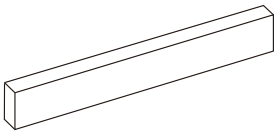	Half concealed kit	UTR-STA
	IR receiver unit	UTY-TRHX
	IR receiver unit	UTB-YWC
	IR receiver unit	UTY-LRH∗B1
	IR receiver unit	UTY-LBHXD
	Human sensor kit	UTY-SHZXC
	Remote sensor unit	UTY-XSZX

Exterior	Part name	Model name
Install when the condition under the roof is over 80% in humidity and over 30 °C in temperature. 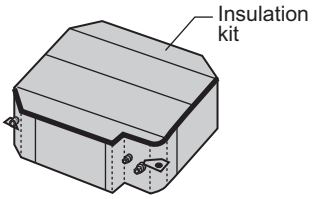	Insulation kit for high humidity	UTZ-KXRA UTZ-KXGA UTZ-KXGB UTZ-KXGC
	Fresh air intake kit	UTZ-VXAA
	Fresh air intake kit	UTZ-VXGA UTZ-VXRA
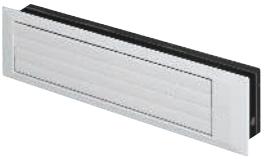	Auto louver grille kit	UTD-GXTA-W UTD-GXTB-W UTD-GXTC-W
	Auto louver grille kit	UTD-GXSA-W UTD-GXSB-W UTD-GXSC-W
	External power supply unit	UTZ-GXXA
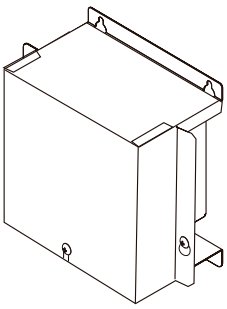	External power supply unit	UTZ-GXXC

GENERAL INFORMATION

Exterior	Model name
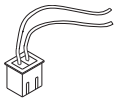 For Outdoor unit	UTY-XWZXZ6
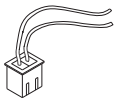 For Indoor unit and Central remote controller	UTY-XWZXZ7
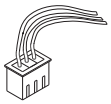 For Central remote controller	UTY-XWZXZ8
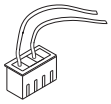 For Outdoor unit	UTY-XWZXZ9
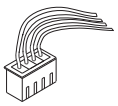 For Touch panel controller and Central remote controller	UTY-XWZXZA
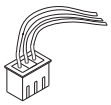 For Indoor unit	UTY-XWZXZB
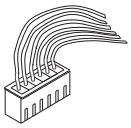 For Indoor unit	UTY-XWZXZC
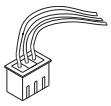 For Indoor unit	UTY-XWZXZD
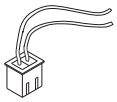 For Indoor unit	UTY-XWZXZE
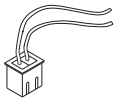 For Outdoor unit	UTY-XWZXZF

Refrigerant R410A

INVERTER

AIRSTAGE™

Variable Refrigerant Flow System

2. MODEL SELECTION

CONTENTS

2. MODEL SELECTION

1. Model selection and capacity calculation 02-1

1-1. Model selection procedure.....02-1
1-2. Indoor unit and outdoor unit selection procedure.....02-2
1-3. Capacity calculation method.....02-4
1-4. Cooling capacity range of connectable indoor units 02-9
1-5. Capacity compensation coefficient 02-10

2. Cooling capacity table (Indoor unit) 02-11

2-1. Compact cassette type 02-11
2-2. 4-way flow cassette type 02-13
2-3. Circular flow cassette type.....02-15
2-4. 3D flow cassette type 02-20
2-5. One way flow cassette type 02-21
2-6. Low static pressure duct (Mini duct) type.....02-23
2-7. Low static pressure duct (Slim duct)/Slim concealed floor type 02-25
2-8. Low static pressure duct (High efficiency) type.....02-27
2-9. Medium static pressure duct type 02-28
2-10. High static pressure duct type 02-29
2-11. Compact floor type 02-30
2-12. Compact floor type (EEV external type model).....02-32
2-13. Floor/Ceiling type.....02-34
2-14. Ceiling type.....02-35
2-15. Wall mounted type.....02-36
2-16. Wall mounted type (EEV external type model) 02-39

3. Heating capacity table (Indoor unit) 02-41

3-1. Compact cassette type 02-41
3-2. 4-way flow cassette type 02-43
3-3. Circular flow cassette type.....02-45
3-4. 3D flow cassette type 02-49
3-5. One way flow cassette type 02-50
3-6. Low static pressure duct (Mini duct) type.....02-52
3-7. Low static pressure duct (Slim duct)/Slim concealed floor type 02-54
3-8. Low static pressure duct (High efficiency) type.....02-56
3-9. Medium static pressure duct type 02-57
3-10. High static pressure duct type 02-59
3-11. Compact floor type 02-60
3-12. Compact floor type (EEV external type model).....02-62
3-13. Floor/Ceiling type.....02-64
3-14. Ceiling type.....02-66
3-15. Wall mounted type.....02-68
3-16. Wall mounted type (EEV external type model) 02-71

4. Cooling capacity table (Outdoor unit) 02-73

CONTENTS (continued)

4-1. Stand-alone 02-73

5. Heating capacity table (Outdoor unit) 02-79

5-1. Stand-alone 02-79

1. Model selection and capacity calculation

1-1. Model selection procedure

Selection of indoor units	Refer to following information: • "Indoor units" of "Model lineup" in Chapter 3. OUTDOOR UNITS on page 03-1 • "Indoor unit and outdoor unit selection procedure" on page 02-2
↓	
Selection of required optional parts	Refer to "Optional parts" in Chapter 1. GENERAL INFORMATION on page 01-7.
↓	
Selection of outdoor units	Refer to following information: • "Outdoor units" of "Model lineup" in Chapter 3. OUTDOOR UNITS on page 03-1 • "Indoor unit and outdoor unit selection procedure" on page 02-2
↓	
Selection of controllers	Refer to "Controllers" of "Optional parts" in Chapter 1. GENERAL INFORMATION on page 01-7.
↓	
Selection of adapter and convertor	Refer to "Adapter/Convertor/Maintenance tool" of "Optional parts" in Chapter 1. GENERAL INFORMATION on page 01-7.
↓	
Selection of branch kit	Refer to following informations: • "Outdoor unit branch kit" of "Optional parts" in Chapter 1. GENERAL INFORMATION on page 01-7 • "Separation tube" of "Optional parts" in Chapter 1. GENERAL INFORMATION on page 01-7 • "Header" of "Optional parts" in Chapter 1. GENERAL INFORMATION on page 01-7
↓	
Selection of other optional parts	Refer to "Others" of "Optional parts" in Chapter 1. GENERAL INFORMATION on page 01-7.
↓	
End	

1-2. Indoor unit and outdoor unit selection procedure

Confirm the design of indoor and outdoor temperature condition.

↓

Calculate heat load of each room.

↓

Select indoor unit to match the heat load for each room.

↓

[▲]
Calculate the estimated capacity of each indoor unit.

Refer to "Capacity calculation method" on page 02-4.

↓

Confirm whether satisfy the following calculation.

Estimated capacity of indoor unit ≥ heat load

If estimated capacity is lower than heat load, change to larger capacity of indoor unit and return to step marked [▲] and perform the calculation again.

↓

Calculate the total capacity of indoor units at following conditions:

- Rated condition
- Design temperature condition

Calculated total capacity of indoor units: **A**

↓

[▲▲]
Select outdoor units to match the total capacity of indoor units.

Confirm the following items:

- Cooling capacity range of connectable indoor units
- Maximum connectable indoor units number

Refer to "Cooling capacity range of connectable indoor units" on page 02-9.

↓

Calculate the compensated capacity of outdoor units.

Refer to "Capacity calculation method" on page 02-4.
Calculated compensated capacity of outdoor units: **B**

↓

Confirm whether satisfy the following calculation. Total capacity of indoor units at design temperature ≥ compensated capacity of outdoor units (**A** ≥ **B**)	If **A** is lower than **B**, go to step marked [▼▼▼].

↓

System capacity = **B**

↓

Calculate actual capacity of each indoor unit by dividing system capacity proportionally.	Refer to "Capacity calculation method" on page 02-4.

↓

Confirm whether satisfy the following calculation. Actual capacity of indoor unit ≥ heat load	If actual capacity of indoor unit is lower than heat load, change to larger capacity of outdoor units and return to step marked [▲▲]. If actual capacity of indoor unit is larger than heat load, procedure is completing.

↓

End

[▼▼▼] System capacity = **A**

↓

Actual capacity of indoor unit = capacity of indoor unit at design temperature

↓

End

1-3. Capacity calculation method

The capacity calculation method which takes the effects of air temperature, pipe length, and frosting/defrosting into consideration is shown below.

(TCin)r	:	Capacity of indoor unit at rated condition
(TCin)d	:	Capacity of indoor unit at design temperature
(TCin)e	:	Estimated capacity of indoor unit
∑*(TCin)r*	:	Total capacity of indoor units at rated condition
∑*(TCin)d*	:	Total capacity of indoor units at design temperature
(TCout)r	:	Capacity of outdoor unit at rated condition
(TCout)d	:	Capacity of outdoor unit at design temperature
(TCout)c	:	Compensated capacity of outdoor unit

- **Estimated capacity of each indoor unit**
  1. Find *(TCin)r* and *(TCin)d*.
     Refer to "Cooling capacity table (Indoor unit)" on page 02-11 or "Heating capacity table (Indoor unit)" on page 02-41.
  2. Find the following compensation coefficient.
     Refer to "Capacity compensation coefficient" on page 02-10.
     – Compensation coefficient of pipe length
     – Compensation coefficient of frosting/defrosting (For heating calculation only)
  3. Calculate *(TCin)e*.
     – Cooling calculation
       (TCin)e = *(TCin)d* × compensation coefficient of pipe length
     – Heating calculation
       (TCin)e = *(TCin)d* × compensation coefficient of pipe length × compensation coefficient of defrosting/frosting

- **Compensated capacity of outdoor units**
  1. Find *(TCout)r*.
     Refer to the value marked blue in "Cooling capacity table (Outdoor unit)" on page 02-73 or the value marked orange in "Heating capacity table (Outdoor unit)" on page 02-79.
  2. Find the following compensation coefficient.
     Refer to "Capacity compensation coefficient" on page 02-10.
     – Compensation coefficient of pipe length
     – Compensation coefficient of frosting/defrosting (For heating calculation only)
  3. Calculate ∑*(TCin)r*.
  4. Calculate the ratio of ∑*(TCin)r* to *(TCout)r*.
     Refer to "Cooling capacity range of connectable indoor units" on page 02-9 and confirm whether satisfy the condition.
  5. Find *(TCout)d* using the value of previous step and "Cooling capacity table (Outdoor unit)" on page 02-73 or "Heating capacity table (Outdoor unit)" on page 02-79.
  6. Calculate *(TCout)c*.
     – Cooling calculation
       (TCout)c = *(TCout)d* × compensation coefficient of pipe length
     – Heating calculation
       (TCout)c = *(TCout)d* × compensation coefficient of pipe length × compensation coefficient of defrosting/frosting

- **System capacity**
  1. Calculate ∑*(TCin)d*.
  2. System capacity is the smaller value of *(TCout)c* and ∑*(TCin)d*.

- **Actual capacity of each indoor unit**
  Calculate actual capacity of each indoor unit by dividing system capacity proportionally.
  Actual capacity of indoor unit = (System capacity) × *(TCin)r*/∑*(TCin)r*

■ Calculation example

● Example

Design conditions			
Indoor temperature	**Outdoor temperature**	**Pipe length**	**Height difference**
28°CDB/20°CWB	35°CDB	40m	20 m Outdoor unit higher side

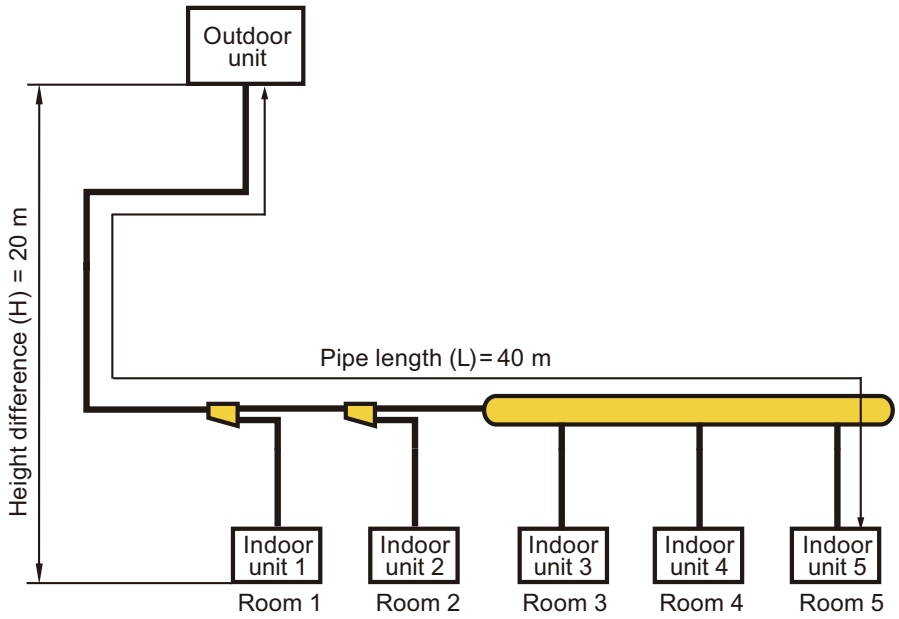

- **Selection of indoor unit**

No	Item		Room 1	Room 2	Room 3	Room 4	Room 5	Remark
A-1	Cooling heat load	kW	2.5	2.5	2.5	2.0	1.5	
A-2	Indoor unit models (Example: AR)		ARXD 012	ARXD 012	ARXD 012	ARXD 009	ARXD 007	
A-3	*(TCin)r*	kW	3.6	3.6	3.6	2.8	2.2	Refer to “Indoor units” of "Outdoor unit and indoor unit lineup" in Chapter 1. GENERAL INFORMATION on page 01-1.
A-4	*(TCin)d*	kW	3.9	3.9	3.9	3.0	2.4	Refer to "Cooling capacity table (Indoor unit)" on page 02-11.
A-5	Compensation coefficient of pipe length		0.852					Refer to "Capacity compensation coefficient" on page 02-10.
A-6	*(TCin)e*	kW	3.3	3.3	3.3	2.6	2.0	(A-4) × (A-5)
A-7	∑*(TCin)r*	kW	15.8					Sum of A-3
A-8	∑*(TCin)d*	kW	17.1					Sum of A-4

- **Preliminary selection of outdoor unit**

No	Item		Value	Remark
B-1	Outdoor unit model		5 HP: AJ∗045LCLDH	
B-2	*(TCout)r*	kW	14.0	Refer to the value marked gray in "Cooling capacity table (Outdoor unit)" on page 02-73
B-3	*∑(TCin)r/(TCout)r*	%	112.9	(A-7)/(B-2)
B-4	*(TCout)d*	kW	14.8	Refer to "Calculation example of 5 HP outdoor units: AJ∗045LCLDH" on page 02-8.
B-5	Compensation coefficient of pipe length		0.852	Refer to "Capacity compensation coefficient" on page 02-10.
B-6	*(TCout)c*	kW	12.6	(B-4) × (B-5)

- **Decision of system capacity**

No	Item	Value	Remark
C-1	System capacity	12.6	Smaller value of (A-8) and (B-6)

- **Calculation of actual capacity of each indoor unit**

Item		Room					Remark
		1	2	3	4	5	
Actual capacity of each indoor unit	kW	2.9	2.9	2.9	2.2	1.7	(C-1) × (A-3)/(A-7)

Calculation method of outdoor unit capacity from capacity tables

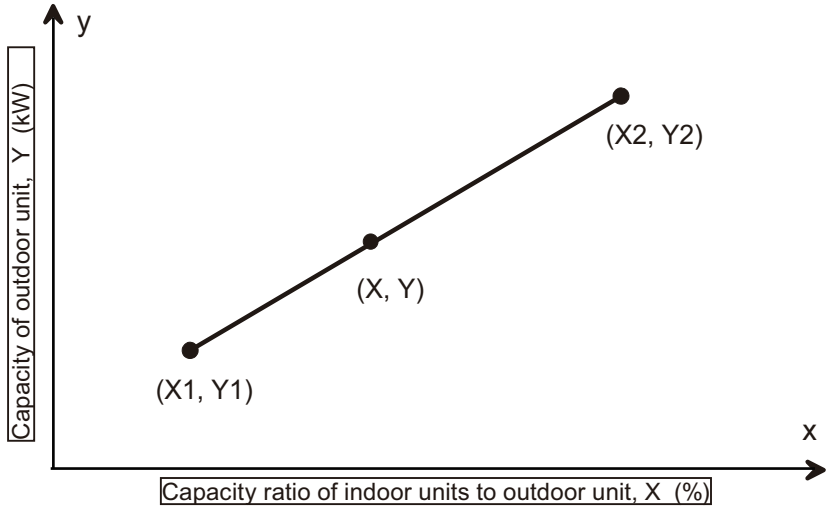

Equation for outdoor unit capacity calculation: $Y = (Y_2 - Y_1)/(X_2 - X_1) \times (X - X_1) + Y_1$

NOTE: Refer to "Cooling capacity table (Outdoor unit)" on page 02-73 to find values of Y_1 and Y_2 using values of X_1 and X_2.

- **Calculation example of 5 HP outdoor units: AJ∗045LCLDH**

Total rated cooling capacity of indoor unit	Outdoor temperature	Indoor temperature									
		20°CDB / 15 °CWB		27°CDB / 19 °CWB		28°CDB / 20 °CWB		30°CDB / 22 °CWB		32°CDB / 23 °CWB	
	(°CDB)	TC	IP	TC	IP	TC	IP	TC	IP	TC	IP
16.8 (120%) X_2	10	11.9	1.81	16.8	2.50	18.0	2.68	19.2	3.34	19.6	3.46
	⋮	⋮	⋮	⋮	⋮	⋮	⋮	⋮	⋮	⋮	⋮
	35	11.9	3.44	14.7	5.35	15.0	5.41	15.6	5.54	15.9	5.60
	⋮	⋮	⋮	⋮	⋮	Y_2	⋮	⋮	⋮	⋮	⋮
	46	11.9	4.96	12.4	4.96		4.96	13.0	4.95	13.2	4.95
15.4 (110%) X_1	10	10.9	1.67	15.4	2.30	16.5	2.46	18.7	2.84	19.3	3.16
	⋮	⋮	⋮	⋮	⋮	⋮	⋮	⋮	⋮	⋮	⋮
	35	10.9	3.03	14.6	5.22	14.9	5.24	15.5	5.24	15.8	5.24
	⋮	⋮	⋮	⋮	⋮	Y_1	⋮	⋮	⋮	⋮	⋮
	46	10.9	4.54	12.3	4.99		4.99	12.8	4.99	13.0	4.99

Capacity ratio of indoor units to outdoor unit (%)	$X_1 = 110$	$X = 112.9$	$X_2 = 120$
Capacity of outdoor units (kW)	$Y_1 = 14.9$	Y	$Y_2 = 15.0$

$Y = (15.0 - 14.9)/(120 - 110) \times (112.9 - 110) + 14.9 =$ **14.9 kW**

1-4. Cooling capacity range of connectable indoor units

RELATED LINKS

"Refrigerant system" in Chapter 6. SYSTEM DESIGN on page 06-1

■ Stand-alone

HP	Capacity (kW)		Set model name	Connectable indoor unit	
	Cooling	Heating		Maximum number	Cooling capacity range (kW)*
4	12.1	12.1	AJ∗040LCLDH	1 to 11	6.1 to 15.7
5	14.0	14.0	AJ∗045LCLDH	1 to 12	7.0 to 18.2
6	15.1	15.1	AJ∗054LCLDH	1 to 13	7.6 to 19.6

*: For conditions for cooling capacity of connectable indoor unit, refer to "Refrigerant system" in Chapter 6. SYSTEM DESIGN on page 06-1.

1-5. Capacity compensation coefficient

■ Compensation coefficient of pipe length

The tables give the compensation coefficient of pipe length owing to installation position (pipe length and height difference). Pipe length and height difference are the length and the height difference between outdoor unit and indoor unit.

Cooling		Pipe length						
		m	5	10	20	30	40	50
Height difference H (m)	Outdoor unit is higher than indoor unit	30	—	—	—	0.885	0.842	0.800
		20	—	—	0.937	0.895	0.852	0.810
		10	—	0.990	0.947	0.905	0.862	0.822
		5	0.995	0.995	0.952	0.910	0.867	0.825
		0	1.000	1.000	0.957	0.915	0.872	0.830
	Outdoor unit is lower than indoor unit	-5	1.000	1.000	0.957	0.915	0.872	0.830
		-10	—	1.000	0.957	0.915	0.872	0.830
		-20	—	—	0.957	0.915	0.872	0.830
		-30	—	—	—	0.915	0.872	0.830

Heating		Pipe length						
		m	5	10	20	30	40	50
Height difference H (m)	Outdoor unit is higher than indoor unit	30	—	—	—	0.995	0.993	0.990
		20	—	—	0.998	0.995	0.993	0.990
		10	—	1.000	0.998	0.995	0.993	0.990
		5	1.000	1.000	0.998	0.995	0.993	0.990
		0	1.000	1.000	0.998	0.995	0.993	0.990
	Outdoor unit is lower than indoor unit	-5	1.000	1.000	0.998	0.995	0.993	0.990
		-10	—	1.000	0.998	0.995	0.993	0.990
		-20	—	—	0.998	0.995	0.993	0.990
		-30	—	—	—	0.995	0.993	0.990

■ Compensation coefficient of frosting/defrosting (Heating operation)

To take the effects of accumulated frost and defrosting operation on heating capacity into consideration, the capacity of outdoor units should be corrected by compensation coefficient shown in the table below.

Outdoor temperature (°CDB/°CWB)	-20/-20.7	-9/-10	-7/-8	0/-1	2/1	5/4	7/6
Compensation coefficient	0.96	0.87	0.85	0.80	0.82	0.93	1.00

2. Cooling capacity table (Indoor unit)

- TC: Total capacity (kW)
- SHC: Sensible heat capacity (kW)
- Values mentioned in the table are the values when the indoor unit's total rated capacity is 100% of the outdoor unit capacity.

2-1. Compact cassette type

■ Model: AUXB004GLEH

Outdoor temperature	Indoor temperature																	
	18°CDB/14°CWB		20°CDB/15°CWB		23°CDB/16°CWB		24°CDB/17°CWB		26°CDB/18°CWB		27°CDB/19°CWB		28°CDB/20°CWB		30°CDB/22°CWB		32°CDB/23°CWB	
°CDB	TC	SHC	TC	SHC	TC	SHC	TC	SHC	TC	SHC	TC	SHC	TC	SHC	TC	SHC	TC	SHC
-15	0.6	0.5	0.7	0.6	0.8	0.7	0.9	0.8	1.0	0.9	1.1	0.9	1.2	0.9	1.4	1.0	1.5	1.0
-10	0.6	0.5	0.7	0.6	0.8	0.7	0.9	0.8	1.0	0.9	1.1	0.9	1.2	0.9	1.4	1.0	1.5	1.0
-5	0.6	0.5	0.7	0.6	0.8	0.7	0.9	0.8	1.0	0.9	1.1	0.9	1.2	0.9	1.4	1.0	1.5	1.0
0	0.6	0.5	0.7	0.6	0.8	0.7	0.9	0.8	1.0	0.9	1.1	0.9	1.2	0.9	1.4	1.0	1.5	1.0
5	0.6	0.5	0.7	0.6	0.8	0.7	0.9	0.8	1.0	0.9	1.1	0.9	1.2	0.9	1.4	1.0	1.5	1.0
10	0.6	0.5	0.7	0.6	0.8	0.7	0.9	0.8	1.0	0.9	1.1	0.9	1.2	0.9	1.4	1.0	1.5	1.0
15	0.6	0.5	0.7	0.6	0.8	0.7	0.9	0.8	1.0	0.9	1.1	0.9	1.2	0.9	1.4	1.0	1.5	1.0
21	0.6	0.5	0.7	0.6	0.8	0.7	0.9	0.8	1.0	0.9	1.1	0.9	1.2	0.9	1.4	1.0	1.4	1.0
23	0.6	0.5	0.7	0.6	0.8	0.7	0.9	0.8	1.0	0.9	1.1	0.9	1.2	0.9	1.4	1.0	1.4	1.0
25	0.6	0.5	0.7	0.6	0.8	0.7	0.9	0.8	1.0	0.9	1.1	0.9	1.2	0.9	1.4	1.0	1.4	1.0
27	0.6	0.5	0.7	0.6	0.8	0.7	0.9	0.8	1.0	0.9	1.1	0.9	1.2	0.9	1.3	0.9	1.4	1.0
30	0.6	0.5	0.7	0.6	0.8	0.7	0.9	0.8	1.0	0.9	1.1	0.9	1.2	0.9	1.3	0.9	1.3	1.0
33	0.6	0.5	0.7	0.6	0.8	0.7	0.9	0.8	1.0	0.9	1.1	0.9	1.2	0.9	1.3	0.9	1.3	1.0
35	0.6	0.5	0.7	0.6	0.8	0.7	0.9	0.8	1.0	0.9	1.1	0.9	1.2	0.9	1.3	0.9	1.3	1.0
37	0.6	0.5	0.7	0.6	0.8	0.7	0.9	0.8	1.0	0.9	1.1	0.9	1.2	0.9	1.2	0.9	1.3	1.0
40	0.6	0.5	0.7	0.6	0.8	0.7	0.9	0.8	1.0	0.9	1.1	0.9	1.2	0.9	1.2	0.9	1.2	1.0
43	0.6	0.5	0.7	0.6	0.8	0.7	0.9	0.8	1.0	0.9	1.1	0.9	1.1	0.9	1.2	0.9	1.2	0.9
46	0.6	0.5	0.7	0.6	0.8	0.7	0.9	0.8	1.0	0.9	1.1	0.9	1.1	0.9	1.1	0.9	1.2	0.9

■ Model: AUXB007GLEH

Outdoor temperature	Indoor temperature															
	20°CDB/15°CWB		23°CDB/16°CWB		24°CDB/17°CWB		26°CDB/18°CWB		27°CDB/19°CWB		28°CDB/20°CWB		30°CDB/22°CWB		32°CDB/23°CWB	
°CDB	TC	SHC	TC	SHC	TC	SHC	TC	SHC	TC	SHC	TC	SHC	TC	SHC	TC	SHC
10	1.4	1.2	1.6	1.5	1.8	1.6	2.0	1.7	2.2	1.8	2.4	1.8	2.8	1.9	2.9	2.0
15	1.4	1.2	1.6	1.5	1.8	1.6	2.0	1.7	2.2	1.8	2.4	1.8	2.8	1.9	2.9	2.0
21	1.4	1.2	1.6	1.5	1.8	1.6	2.0	1.7	2.2	1.8	2.4	1.8	2.8	1.9	2.9	2.0
23	1.4	1.2	1.6	1.5	1.8	1.6	2.0	1.7	2.2	1.8	2.4	1.8	2.8	1.9	2.8	2.0
25	1.4	1.2	1.6	1.5	1.8	1.6	2.0	1.7	2.2	1.8	2.4	1.8	2.7	1.9	2.8	2.0
27	1.4	1.2	1.6	1.5	1.8	1.6	2.0	1.7	2.2	1.8	2.4	1.8	2.7	1.9	2.7	2.0
30	1.4	1.2	1.6	1.5	1.8	1.6	2.0	1.7	2.2	1.8	2.4	1.8	2.6	1.8	2.7	1.9
33	1.4	1.2	1.6	1.5	1.8	1.6	2.0	1.7	2.2	1.8	2.4	1.8	2.6	1.8	2.6	1.9
35	1.4	1.2	1.6	1.5	1.8	1.6	2.0	1.7	2.2	1.8	2.4	1.8	2.5	1.8	2.6	1.9
37	1.4	1.2	1.6	1.5	1.8	1.6	2.0	1.7	2.2	1.8	2.4	1.8	2.5	1.8	2.5	1.9
40	1.4	1.2	1.6	1.5	1.8	1.6	2.0	1.7	2.2	1.8	2.3	1.8	2.4	1.8	2.5	1.9
43	1.4	1.2	1.6	1.5	1.8	1.6	2.0	1.7	2.2	1.8	2.3	1.8	2.4	1.8	2.4	1.9
46	1.4	1.2	1.6	1.5	1.8	1.6	2.0	1.7	2.2	1.8	2.2	1.8	2.3	1.7	2.3	1.8

■ Model: AUXB009GLEH

Outdoor temperature	Indoor temperature															
	20°CDB/15°CWB		23°CDB/16°CWB		24°CDB/17°CWB		26°CDB/18°CWB		27°CDB/19°CWB		28°CDB/20°CWB		30°CDB/22°CWB		32°CDB/23°CWB	
°CDB	TC	SHC	TC	SHC	TC	SHC	TC	SHC	TC	SHC	TC	SHC	TC	SHC	TC	SHC
10	1.8	1.4	2.1	1.7	2.3	1.8	2.6	2.0	2.8	2.1	3.0	2.1	3.5	2.2	3.8	2.4
15	1.8	1.4	2.1	1.7	2.3	1.8	2.6	2.0	2.8	2.1	3.0	2.1	3.5	2.2	3.8	2.4
21	1.8	1.4	2.1	1.7	2.3	1.8	2.6	2.0	2.8	2.1	3.0	2.1	3.5	2.2	3.7	2.3
23	1.8	1.4	2.1	1.7	2.3	1.8	2.6	2.0	2.8	2.1	3.0	2.1	3.5	2.2	3.6	2.3
25	1.8	1.4	2.1	1.7	2.3	1.8	2.6	2.0	2.8	2.1	3.0	2.1	3.5	2.2	3.5	2.3
27	1.8	1.4	2.1	1.7	2.3	1.8	2.6	2.0	2.8	2.1	3.0	2.1	3.4	2.2	3.5	2.3
30	1.8	1.4	2.1	1.7	2.3	1.8	2.6	2.0	2.8	2.1	3.0	2.1	3.4	2.1	3.4	2.2
33	1.8	1.4	2.1	1.7	2.3	1.8	2.6	2.0	2.8	2.1	3.0	2.1	3.3	2.1	3.3	2.2
35	1.8	1.4	2.1	1.7	2.3	1.8	2.6	2.0	2.8	2.1	3.0	2.1	3.2	2.1	3.3	2.2
37	1.8	1.4	2.1	1.7	2.3	1.8	2.6	2.0	2.8	2.1	3.0	2.1	3.2	2.1	3.2	2.2
40	1.8	1.4	2.1	1.7	2.3	1.8	2.6	2.0	2.8	2.1	3.0	2.1	3.1	2.0	3.1	2.1
43	1.8	1.4	2.1	1.7	2.3	1.8	2.6	2.0	2.8	2.1	2.9	2.0	3.0	2.0	3.1	2.1
46	1.8	1.4	2.1	1.7	2.3	1.8	2.6	2.0	2.8	2.0	2.8	2.0	2.9	2.0	3.0	2.1

Model: AUXB012GLEH

Outdoor temperature	Indoor temperature															
	20°CDB/15°CWB		23°CDB/16°CWB		24°CDB/17°CWB		26°CDB/18°CWB		27°CDB/19°CWB		28°CDB/20°CWB		30°CDB/22°CWB		32°CDB/23°CWB	
°CDB	TC	SHC	TC	SHC	TC	SHC	TC	SHC	TC	SHC	TC	SHC	TC	SHC	TC	SHC
10	2.4	1.8	2.7	2.3	3.0	2.4	3.3	2.6	3.6	2.7	3.9	2.7	4.5	2.8	4.8	3.1
15	2.4	1.8	2.7	2.3	3.0	2.4	3.3	2.6	3.6	2.7	3.9	2.7	4.5	2.8	4.8	3.1
21	2.4	1.8	2.7	2.3	3.0	2.4	3.3	2.6	3.6	2.7	3.9	2.7	4.5	2.8	4.7	3.0
23	2.4	1.8	2.7	2.3	3.0	2.4	3.3	2.6	3.6	2.7	3.9	2.7	4.5	2.8	4.6	3.0
25	2.4	1.8	2.7	2.3	3.0	2.4	3.3	2.6	3.6	2.7	3.9	2.7	4.5	2.8	4.6	3.0
27	2.4	1.8	2.7	2.3	3.0	2.4	3.3	2.6	3.6	2.7	3.9	2.7	4.4	2.8	4.5	2.9
30	2.4	1.8	2.7	2.3	3.0	2.4	3.3	2.6	3.6	2.7	3.9	2.7	4.3	2.8	4.4	2.9
33	2.4	1.8	2.7	2.3	3.0	2.4	3.3	2.6	3.6	2.7	3.9	2.7	4.2	2.7	4.3	2.9
35	2.4	1.8	2.7	2.3	3.0	2.4	3.3	2.6	3.6	2.7	3.9	2.7	4.1	2.7	4.2	2.8
37	2.4	1.8	2.7	2.3	3.0	2.4	3.3	2.6	3.6	2.7	3.9	2.7	4.1	2.7	4.1	2.8
40	2.4	1.8	2.7	2.3	3.0	2.4	3.3	2.6	3.6	2.7	3.8	2.7	4.0	2.6	4.0	2.8
43	2.4	1.8	2.7	2.3	3.0	2.4	3.3	2.6	3.6	2.7	3.7	2.7	3.9	2.6	3.9	2.7
46	2.4	1.8	2.7	2.3	3.0	2.4	3.3	2.6	3.5	2.6	3.6	2.6	3.8	2.6	3.8	2.7

Model: AUXB014GLEH

Outdoor temperature	Indoor temperature															
	20°CDB/15°CWB		23°CDB/16°CWB		24°CDB/17°CWB		26°CDB/18°CWB		27°CDB/19°CWB		28°CDB/20°CWB		30°CDB/22°CWB		32°CDB/23°CWB	
°CDB	TC	SHC	TC	SHC	TC	SHC	TC	SHC	TC	SHC	TC	SHC	TC	SHC	TC	SHC
10	3.0	2.2	3.3	2.7	3.7	2.8	4.1	3.1	4.5	3.2	4.9	3.3	5.6	3.4	6.0	3.7
15	3.0	2.2	3.3	2.7	3.7	2.8	4.1	3.1	4.5	3.2	4.9	3.3	5.6	3.4	6.0	3.7
21	3.0	2.2	3.3	2.7	3.7	2.8	4.1	3.1	4.5	3.2	4.9	3.3	5.6	3.4	5.9	3.6
23	3.0	2.2	3.3	2.7	3.7	2.8	4.1	3.1	4.5	3.2	4.9	3.3	5.6	3.4	5.8	3.6
25	3.0	2.2	3.3	2.7	3.7	2.8	4.1	3.1	4.5	3.2	4.9	3.3	5.6	3.4	5.7	3.6
27	3.0	2.2	3.3	2.7	3.7	2.8	4.1	3.1	4.5	3.2	4.9	3.3	5.5	3.4	5.6	3.5
30	3.0	2.2	3.3	2.7	3.7	2.8	4.1	3.1	4.5	3.2	4.9	3.3	5.4	3.3	5.5	3.5
33	3.0	2.2	3.3	2.7	3.7	2.8	4.1	3.1	4.5	3.2	4.9	3.3	5.3	3.3	5.4	3.4
35	3.0	2.2	3.3	2.7	3.7	2.8	4.1	3.1	4.5	3.2	4.9	3.3	5.2	3.2	5.3	3.4
37	3.0	2.2	3.3	2.7	3.7	2.8	4.1	3.1	4.5	3.2	4.9	3.3	5.1	3.2	5.2	3.4
40	3.0	2.2	3.3	2.7	3.7	2.8	4.1	3.1	4.5	3.2	4.8	3.2	5.0	3.2	5.0	3.3
43	3.0	2.2	3.3	2.7	3.7	2.8	4.1	3.1	4.5	3.2	4.6	3.2	4.8	3.1	4.9	3.3
46	3.0	2.2	3.3	2.7	3.7	2.8	4.1	3.1	4.4	3.2	4.5	3.1	4.7	3.1	4.8	3.2

Model: AUXB018GLEH

Outdoor temperature	Indoor temperature															
	20°CDB/15°CWB		23°CDB/16°CWB		24°CDB/17°CWB		26°CDB/18°CWB		27°CDB/19°CWB		28°CDB/20°CWB		30°CDB/22°CWB		32°CDB/23°CWB	
°CDB	TC	SHC	TC	SHC	TC	SHC	TC	SHC	TC	SHC	TC	SHC	TC	SHC	TC	SHC
10	3.7	2.6	4.2	3.2	4.6	3.4	5.1	3.7	5.6	3.9	6.1	4.0	7.0	4.2	7.5	4.5
15	3.7	2.6	4.2	3.2	4.6	3.4	5.1	3.7	5.6	3.9	6.1	4.0	7.0	4.2	7.5	4.5
21	3.7	2.6	4.2	3.2	4.6	3.4	5.1	3.7	5.6	3.9	6.1	4.0	7.0	4.2	7.3	4.4
23	3.7	2.6	4.2	3.2	4.6	3.4	5.1	3.7	5.6	3.9	6.1	4.0	7.0	4.2	7.2	4.3
25	3.7	2.6	4.2	3.2	4.6	3.4	5.1	3.7	5.6	3.9	6.1	4.0	7.0	4.1	7.1	4.3
27	3.7	2.6	4.2	3.2	4.6	3.4	5.1	3.7	5.6	3.9	6.1	4.0	6.8	4.1	7.0	4.2
30	3.7	2.6	4.2	3.2	4.6	3.4	5.1	3.7	5.6	3.9	6.1	4.0	6.7	4.0	6.8	4.2
33	3.7	2.6	4.2	3.2	4.6	3.4	5.1	3.7	5.6	3.9	6.1	4.0	6.5	4.0	6.7	4.1
35	3.7	2.6	4.2	3.2	4.6	3.4	5.1	3.7	5.6	3.9	6.1	4.0	6.4	3.9	6.5	4.1
37	3.7	2.6	4.2	3.2	4.6	3.4	5.1	3.7	5.6	3.9	6.1	4.0	6.3	3.9	6.4	4.0
40	3.7	2.6	4.2	3.2	4.6	3.4	5.1	3.7	5.6	3.9	5.9	3.9	6.2	3.8	6.3	4.0
43	3.7	2.6	4.2	3.2	4.6	3.4	5.1	3.7	5.6	3.9	5.8	3.8	6.0	3.8	6.1	3.9
46	3.7	2.6	4.2	3.2	4.6	3.4	5.1	3.7	5.5	3.8	5.6	3.8	5.8	3.7	5.9	3.8

Model: AUXB024GLEH

Outdoor temperature	Indoor temperature															
	20°CDB/15°CWB		23°CDB/16°CWB		24°CDB/17°CWB		26°CDB/18°CWB		27°CDB/19°CWB		28°CDB/20°CWB		30°CDB/22°CWB		32°CDB/23°CWB	
°CDB	TC	SHC	TC	SHC	TC	SHC	TC	SHC	TC	SHC	TC	SHC	TC	SHC	TC	SHC
10	4.7	3.5	5.3	4.4	5.9	4.5	6.5	5.0	7.1	5.2	7.7	5.3	8.9	5.5	9.5	5.9
15	4.7	3.5	5.3	4.4	5.9	4.5	6.5	5.0	7.1	5.2	7.7	5.3	8.9	5.5	9.5	5.9
21	4.7	3.5	5.3	4.4	5.9	4.5	6.5	5.0	7.1	5.2	7.7	5.3	8.9	5.5	9.3	5.8
23	4.7	3.5	5.3	4.4	5.9	4.5	6.5	5.0	7.1	5.2	7.7	5.3	8.9	5.5	9.1	5.8
25	4.7	3.5	5.3	4.4	5.9	4.5	6.5	5.0	7.1	5.2	7.7	5.3	8.8	5.5	9.0	5.7
27	4.7	3.5	5.3	4.4	5.9	4.5	6.5	5.0	7.1	5.2	7.7	5.3	8.7	5.4	8.8	5.7
30	4.7	3.5	5.3	4.4	5.9	4.5	6.5	5.0	7.1	5.2	7.7	5.3	8.5	5.3	8.6	5.6
33	4.7	3.5	5.3	4.4	5.9	4.5	6.5	5.0	7.1	5.2	7.7	5.3	8.3	5.3	8.4	5.5
35	4.7	3.5	5.3	4.4	5.9	4.5	6.5	5.0	7.1	5.2	7.7	5.3	8.1	5.2	8.3	5.4
37	4.7	3.5	5.3	4.4	5.9	4.5	6.5	5.0	7.1	5.2	7.7	5.3	8.0	5.2	8.2	5.4
40	4.7	3.5	5.3	4.4	5.9	4.5	6.5	5.0	7.1	5.2	7.5	5.2	7.8	5.1	8.0	5.3
43	4.7	3.5	5.3	4.4	5.9	4.5	6.5	5.0	7.1	5.2	7.3	5.1	7.6	5.0	7.8	5.3
46	4.7	3.5	5.3	4.4	5.9	4.5	6.5	5.0	7.0	5.1	7.1	5.1	7.4	5.0	7.5	5.2

2-2. 4-way flow cassette type

■ Model: AUXD18GALH

Outdoor temperature	Indoor temperature															
	20°CDB/15°CWB		23°CDB/16°CWB		24°CDB/17°CWB		26°CDB/18°CWB		27°CDB/19°CWB		28°CDB/20°CWB		30°CDB/22°CWB		32°CDB/23°CWB	
°CDB	TC	SHC	TC	SHC	TC	SHC	TC	SHC	TC	SHC	TC	SHC	TC	SHC	TC	SHC
10	3.7	3.1	4.2	3.9	4.6	4.1	5.1	4.5	5.6	4.6	6.1	4.7	7.0	4.8	7.5	5.2
15	3.7	3.1	4.2	3.9	4.6	4.1	5.1	4.5	5.6	4.6	6.1	4.7	7.0	4.8	7.5	5.2
21	3.7	3.1	4.2	3.9	4.6	4.1	5.1	4.5	5.6	4.6	6.1	4.7	7.0	4.8	7.3	5.2
23	3.7	3.1	4.2	3.9	4.6	4.1	5.1	4.5	5.6	4.6	6.1	4.7	7.0	4.8	7.2	5.1
25	3.7	3.1	4.2	3.9	4.6	4.1	5.1	4.5	5.6	4.6	6.1	4.7	7.0	4.8	7.1	5.1
27	3.7	3.1	4.2	3.9	4.6	4.1	5.1	4.5	5.6	4.6	6.1	4.7	6.8	4.8	7.0	5.0
30	3.7	3.1	4.2	3.9	4.6	4.1	5.1	4.5	5.6	4.6	6.1	4.7	6.7	4.7	6.8	5.0
33	3.7	3.1	4.2	3.9	4.6	4.1	5.1	4.5	5.6	4.6	6.1	4.7	6.5	4.7	6.7	4.9
35	3.7	3.1	4.2	3.9	4.6	4.1	5.1	4.5	5.6	4.6	6.1	4.7	6.4	4.6	6.5	4.9
37	3.7	3.1	4.2	3.9	4.6	4.1	5.1	4.5	5.6	4.6	6.1	4.7	6.3	4.6	6.4	4.9
40	3.7	3.1	4.2	3.9	4.6	4.1	5.1	4.5	5.6	4.6	5.9	4.6	6.2	4.5	6.3	4.8
43	3.7	3.1	4.2	3.9	4.6	4.1	5.1	4.5	5.6	4.6	5.8	4.6	6.0	4.5	6.1	4.8
46	3.7	3.1	4.2	3.9	4.6	4.1	5.1	4.5	5.5	4.6	5.6	4.5	5.8	4.4	5.9	4.7

■ Model: AUXD24GALH

Outdoor temperature	Indoor temperature															
	20°CDB/15°CWB		23°CDB/16°CWB		24°CDB/17°CWB		26°CDB/18°CWB		27°CDB/19°CWB		28°CDB/20°CWB		30°CDB/22°CWB		32°CDB/23°CWB	
°CDB	TC	SHC	TC	SHC	TC	SHC	TC	SHC	TC	SHC	TC	SHC	TC	SHC	TC	SHC
10	4.7	3.8	5.3	4.8	5.9	4.9	6.5	5.5	7.1	5.6	7.7	5.7	8.9	5.9	9.5	6.4
15	4.7	3.8	5.3	4.8	5.9	4.9	6.5	5.5	7.1	5.6	7.7	5.7	8.9	5.9	9.5	6.4
21	4.7	3.8	5.3	4.8	5.9	4.9	6.5	5.5	7.1	5.6	7.7	5.7	8.9	5.9	9.3	6.3
23	4.7	3.8	5.3	4.8	5.9	4.9	6.5	5.5	7.1	5.6	7.7	5.7	8.9	5.9	9.1	6.2
25	4.7	3.8	5.3	4.8	5.9	4.9	6.5	5.5	7.1	5.6	7.7	5.7	8.8	5.9	9.0	6.2
27	4.7	3.8	5.3	4.8	5.9	4.9	6.5	5.5	7.1	5.6	7.7	5.7	8.7	5.8	8.8	6.1
30	4.7	3.8	5.3	4.8	5.9	4.9	6.5	5.5	7.1	5.6	7.7	5.7	8.5	5.8	8.6	6.1
33	4.7	3.8	5.3	4.8	5.9	4.9	6.5	5.5	7.1	5.6	7.7	5.7	8.3	5.7	8.4	6.0
35	4.7	3.8	5.3	4.8	5.9	4.9	6.5	5.5	7.1	5.6	7.7	5.7	8.1	5.6	8.3	6.0
37	4.7	3.8	5.3	4.8	5.9	4.9	6.5	5.5	7.1	5.6	7.7	5.7	8.0	5.6	8.2	5.9
40	4.7	3.8	5.3	4.8	5.9	4.9	6.5	5.5	7.1	5.6	7.5	5.7	7.8	5.5	8.0	5.9
43	4.7	3.8	5.3	4.8	5.9	4.9	6.5	5.5	7.1	5.6	7.3	5.6	7.6	5.5	7.8	5.8
46	4.7	3.8	5.3	4.8	5.9	4.9	6.5	5.5	7.0	5.6	7.1	5.5	7.4	5.4	7.5	5.7

■ Model: AUXA30GALH

Outdoor temperature	Indoor temperature															
	20°CDB/15°CWB		23°CDB/16°CWB		24°CDB/17°CWB		26°CDB/18°CWB		27°CDB/19°CWB		28°CDB/20°CWB		30°CDB/22°CWB		32°CDB/23°CWB	
°CDB	TC	SHC	TC	SHC	TC	SHC	TC	SHC	TC	SHC	TC	SHC	TC	SHC	TC	SHC
10	5.9	4.8	6.7	6.0	7.5	6.2	8.2	6.9	9.0	7.1	9.7	7.2	11.3	7.5	12.1	8.0
15	5.9	4.8	6.7	6.0	7.5	6.2	8.2	6.9	9.0	7.1	9.7	7.2	11.3	7.5	12.1	8.0
21	5.9	4.8	6.7	6.0	7.5	6.2	8.2	6.9	9.0	7.1	9.7	7.2	11.3	7.5	11.7	7.9
23	5.9	4.8	6.7	6.0	7.5	6.2	8.2	6.9	9.0	7.1	9.7	7.2	11.3	7.5	11.5	7.9
25	5.9	4.8	6.7	6.0	7.5	6.2	8.2	6.9	9.0	7.1	9.7	7.2	11.2	7.4	11.4	7.8
27	5.9	4.8	6.7	6.0	7.5	6.2	8.2	6.9	9.0	7.1	9.7	7.2	11.0	7.4	11.2	7.7
30	5.9	4.8	6.7	6.0	7.5	6.2	8.2	6.9	9.0	7.1	9.7	7.2	10.8	7.3	11.0	7.6
33	5.9	4.8	6.7	6.0	7.5	6.2	8.2	6.9	9.0	7.1	9.7	7.2	10.5	7.2	10.7	7.6
35	5.9	4.8	6.7	6.0	7.5	6.2	8.2	6.9	9.0	7.1	9.7	7.2	10.3	7.1	10.5	7.5
37	5.9	4.8	6.7	6.0	7.5	6.2	8.2	6.9	9.0	7.1	9.7	7.2	10.2	7.1	10.4	7.4
40	5.9	4.8	6.7	6.0	7.5	6.2	8.2	6.9	9.0	7.1	9.5	7.1	9.9	7.0	10.1	7.4
43	5.9	4.8	6.7	6.0	7.5	6.2	8.2	6.9	9.0	7.1	9.3	7.0	9.6	6.9	9.8	7.3
46	5.9	4.8	6.7	6.0	7.5	6.2	8.2	6.9	8.8	6.9	9.0	7.0	9.4	6.8	9.5	7.2

■ Model: AUXA34GALH

Outdoor temperature	Indoor temperature															
	20°CDB/15°CWB		23°CDB/16°CWB		24°CDB/17°CWB		26°CDB/18°CWB		27°CDB/19°CWB		28°CDB/20°CWB		30°CDB/22°CWB		32°CDB/23°CWB	
°CDB	TC	SHC	TC	SHC	TC	SHC	TC	SHC	TC	SHC	TC	SHC	TC	SHC	TC	SHC
10	6.6	5.4	7.5	6.7	8.3	6.9	9.2	7.7	10.0	7.8	10.9	8.0	12.6	8.3	13.4	8.9
15	6.6	5.4	7.5	6.7	8.3	6.9	9.2	7.7	10.0	7.8	10.9	8.0	12.6	8.3	13.4	8.9
21	6.6	5.4	7.5	6.7	8.3	6.9	9.2	7.7	10.0	7.8	10.9	8.0	12.6	8.3	13.1	8.8
23	6.6	5.4	7.5	6.7	8.3	6.9	9.2	7.7	10.0	7.8	10.9	8.0	12.6	8.3	12.9	8.7
25	6.6	5.4	7.5	6.7	8.3	6.9	9.2	7.7	10.0	7.8	10.9	8.0	12.5	8.3	12.7	8.6
27	6.6	5.4	7.5	6.7	8.3	6.9	9.2	7.7	10.0	7.8	10.9	8.0	12.3	8.2	12.5	8.6
30	6.6	5.4	7.5	6.7	8.3	6.9	9.2	7.7	10.0	7.8	10.9	8.0	12.0	8.1	12.2	8.5
33	6.6	5.4	7.5	6.7	8.3	6.9	9.2	7.7	10.0	7.8	10.9	8.0	11.7	8.0	11.9	8.4
35	6.6	5.4	7.5	6.7	8.3	6.9	9.2	7.7	10.0	7.8	10.9	8.0	11.5	7.9	11.7	8.3
37	6.6	5.4	7.5	6.7	8.3	6.9	9.2	7.7	10.0	7.8	10.9	8.0	11.3	7.8	11.5	8.3
40	6.6	5.4	7.5	6.7	8.3	6.9	9.2	7.7	10.0	7.8	10.6	7.9	11.0	7.7	11.3	8.2
43	6.6	5.4	7.5	6.7	8.3	6.9	9.2	7.7	10.0	7.8	10.3	7.8	10.8	7.7	11.0	8.1
46	6.6	5.4	7.5	6.7	8.3	6.9	9.2	7.7	9.9	7.8	10.0	7.7	10.5	7.6	10.7	8.0

■ Model: AUXA36GALH

Outdoor temperature	Indoor temperature															
	20°CDB/15°CWB		23°CDB/16°CWB		24°CDB/17°CWB		26°CDB/18°CWB		27°CDB/19°CWB		28°CDB/20°CWB		30°CDB/22°CWB		32°CDB/23°CWB	
°CDB	TC	SHC	TC	SHC	TC	SHC	TC	SHC	TC	SHC	TC	SHC	TC	SHC	TC	SHC
10	7.4	5.7	8.3	7.1	9.3	7.4	10.2	8.2	11.2	8.4	12.1	8.6	14.0	8.9	15.0	9.6
15	7.4	5.7	8.3	7.1	9.3	7.4	10.2	8.2	11.2	8.4	12.1	8.6	14.0	8.9	15.0	9.6
21	7.4	5.7	8.3	7.1	9.3	7.4	10.2	8.2	11.2	8.4	12.1	8.6	14.0	8.9	14.6	9.5
23	7.4	5.7	8.3	7.1	9.3	7.4	10.2	8.2	11.2	8.4	12.1	8.6	14.0	8.9	14.4	9.3
25	7.4	5.7	8.3	7.1	9.3	7.4	10.2	8.2	11.2	8.4	12.1	8.6	13.9	8.9	14.2	9.3
27	7.4	5.7	8.3	7.1	9.3	7.4	10.2	8.2	11.2	8.4	12.1	8.6	13.7	8.8	14.0	9.2
30	7.4	5.7	8.3	7.1	9.3	7.4	10.2	8.2	11.2	8.4	12.1	8.6	13.4	8.7	13.6	9.1
33	7.4	5.7	8.3	7.1	9.3	7.4	10.2	8.2	11.2	8.4	12.1	8.6	13.1	8.6	13.3	9.0
35	7.4	5.7	8.3	7.1	9.3	7.4	10.2	8.2	11.2	8.4	12.1	8.6	12.8	8.5	13.1	8.9
37	7.4	5.7	8.3	7.1	9.3	7.4	10.2	8.2	11.2	8.4	12.1	8.6	12.6	8.4	12.9	8.8
40	7.4	5.7	8.3	7.1	9.3	7.4	10.2	8.2	11.2	8.4	11.8	8.5	12.3	8.3	12.6	8.7
43	7.4	5.7	8.3	7.1	9.3	7.4	10.2	8.2	11.2	8.4	11.5	8.4	12.0	8.2	12.2	8.6
46	7.4	5.7	8.3	7.1	9.3	7.4	10.2	8.2	11.0	8.2	11.2	8.2	11.7	8.1	11.9	8.5

■ Model: AUXA45GALH

Outdoor temperature	Indoor temperature															
	20°CDB/15°CWB		23°CDB/16°CWB		24°CDB/17°CWB		26°CDB/18°CWB		27°CDB/19°CWB		28°CDB/20°CWB		30°CDB/22°CWB		32°CDB/23°CWB	
°CDB	TC	SHC	TC	SHC	TC	SHC	TC	SHC	TC	SHC	TC	SHC	TC	SHC	TC	SHC
10	8.2	6.3	9.3	7.7	10.4	8.0	11.4	8.9	12.5	9.1	13.5	9.3	15.7	9.7	16.7	10.5
15	8.2	6.3	9.3	7.7	10.4	8.0	11.4	8.9	12.5	9.1	13.5	9.3	15.7	9.7	16.7	10.5
21	8.2	6.3	9.3	7.7	10.4	8.0	11.4	8.9	12.5	9.1	13.5	9.3	15.7	9.7	16.3	10.3
23	8.2	6.3	9.3	7.7	10.4	8.0	11.4	8.9	12.5	9.1	13.5	9.3	15.7	9.7	16.0	10.2
25	8.2	6.3	9.3	7.7	10.4	8.0	11.4	8.9	12.5	9.1	13.5	9.3	15.5	9.7	15.8	10.1
27	8.2	6.3	9.3	7.7	10.4	8.0	11.4	8.9	12.5	9.1	13.5	9.3	15.3	9.6	15.6	10.0
30	8.2	6.3	9.3	7.7	10.4	8.0	11.4	8.9	12.5	9.1	13.5	9.3	15.0	9.5	15.2	9.9
33	8.2	6.3	9.3	7.7	10.4	8.0	11.4	8.9	12.5	9.1	13.5	9.3	14.6	9.3	14.9	9.8
35	8.2	6.3	9.3	7.7	10.4	8.0	11.4	8.9	12.5	9.1	13.5	9.3	14.3	9.2	14.6	9.7
37	8.2	6.3	9.3	7.7	10.4	8.0	11.4	8.9	12.5	9.1	13.5	9.3	14.1	9.1	14.4	9.6
40	8.2	6.3	9.3	7.7	10.4	8.0	11.4	8.9	12.5	9.1	13.2	9.2	13.8	9.0	14.0	9.5
43	8.2	6.3	9.3	7.7	10.4	8.0	11.4	8.9	12.5	9.1	12.9	9.1	13.4	8.9	13.7	9.3
46	8.2	6.3	9.3	7.7	10.4	8.0	11.4	8.9	12.3	9.0	12.5	9.0	13.0	8.8	13.3	9.2

■ Model: AUXA54GALH

Outdoor temperature	Indoor temperature															
	20°CDB/15°CWB		23°CDB/16°CWB		24°CDB/17°CWB		26°CDB/18°CWB		27°CDB/19°CWB		28°CDB/20°CWB		30°CDB/22°CWB		32°CDB/23°CWB	
°CDB	TC	SHC	TC	SHC	TC	SHC	TC	SHC	TC	SHC	TC	SHC	TC	SHC	TC	SHC
10	9.2	6.8	10.4	8.4	11.6	8.8	12.8	9.7	14.0	10.0	15.2	10.2	17.6	10.7	18.8	11.5
15	9.2	6.8	10.4	8.4	11.6	8.8	12.8	9.7	14.0	10.0	15.2	10.2	17.6	10.7	18.8	11.5
21	9.2	6.8	10.4	8.4	11.6	8.8	12.8	9.7	14.0	10.0	15.2	10.2	17.6	10.7	18.3	11.3
23	9.2	6.8	10.4	8.4	11.6	8.8	12.8	9.7	14.0	10.0	15.2	10.2	17.6	10.7	18.0	11.1
25	9.2	6.8	10.4	8.4	11.6	8.8	12.8	9.7	14.0	10.0	15.2	10.2	17.4	10.6	17.7	11.0
27	9.2	6.8	10.4	8.4	11.6	8.8	12.8	9.7	14.0	10.0	15.2	10.2	17.1	10.5	17.5	10.9
30	9.2	6.8	10.4	8.4	11.6	8.8	12.8	9.7	14.0	10.0	15.2	10.2	16.8	10.4	17.1	10.8
33	9.2	6.8	10.4	8.4	11.6	8.8	12.8	9.7	14.0	10.0	15.2	10.2	16.4	10.2	16.7	10.6
35	9.2	6.8	10.4	8.4	11.6	8.8	12.8	9.7	14.0	10.0	15.2	10.2	16.1	10.1	16.4	10.5
37	9.2	6.8	10.4	8.4	11.6	8.8	12.8	9.7	14.0	10.0	15.2	10.2	15.8	10.0	16.1	10.4
40	9.2	6.8	10.4	8.4	11.6	8.8	12.8	9.7	14.0	10.0	14.8	10.1	15.4	9.9	15.7	10.3
43	9.2	6.8	10.4	8.4	11.6	8.8	12.8	9.7	14.0	10.0	14.4	9.9	15.0	9.7	15.3	10.2
46	9.2	6.8	10.4	8.4	11.6	8.8	12.8	9.7	13.8	9.8	14.0	9.8	14.6	9.6	14.9	10.0

2-3. Circular flow cassette type

■ Model: AUXN009GLAH

Outdoor temperature	Indoor temperature																	
	18°CDB/14°CWB		20°CDB/15°CWB		23°CDB/16°CWB		24°CDB/17°CWB		26°CDB/18°CWB		27°CDB/19°CWB		28°CDB/20°CWB		30°CDB/22°CWB		32°CDB/23°CWB	
°CDB	TC	SHC	TC	SHC	TC	SHC	TC	SHC	TC	SHC	TC	SHC	TC	SHC	TC	SHC	TC	SHC
-15	1.6	1.2	1.8	1.4	2.1	1.8	2.3	1.8	2.6	2.0	2.8	2.1	3.0	2.1	3.5	2.2	3.8	2.4
-10	1.6	1.2	1.8	1.4	2.1	1.8	2.3	1.8	2.6	2.0	2.8	2.1	3.0	2.1	3.5	2.2	3.8	2.4
-5	1.6	1.2	1.8	1.4	2.1	1.8	2.3	1.8	2.6	2.0	2.8	2.1	3.0	2.1	3.5	2.2	3.8	2.4
0	1.6	1.2	1.8	1.4	2.1	1.8	2.3	1.8	2.6	2.0	2.8	2.1	3.0	2.1	3.5	2.2	3.8	2.4
5	1.6	1.2	1.8	1.4	2.1	1.8	2.3	1.8	2.6	2.0	2.8	2.1	3.0	2.1	3.5	2.2	3.8	2.4
10	1.6	1.2	1.8	1.4	2.1	1.8	2.3	1.8	2.6	2.0	2.8	2.1	3.0	2.1	3.5	2.2	3.8	2.4
15	1.6	1.2	1.8	1.4	2.1	1.8	2.3	1.8	2.6	2.0	2.8	2.1	3.0	2.1	3.5	2.2	3.8	2.4
21	1.6	1.2	1.8	1.4	2.1	1.8	2.3	1.8	2.6	2.0	2.8	2.1	3.0	2.1	3.5	2.2	3.7	2.4
23	1.6	1.2	1.8	1.4	2.1	1.8	2.3	1.8	2.6	2.0	2.8	2.1	3.0	2.1	3.5	2.2	3.6	2.3
25	1.6	1.2	1.8	1.4	2.1	1.8	2.3	1.8	2.6	2.0	2.8	2.1	3.0	2.1	3.5	2.2	3.5	2.3
27	1.6	1.2	1.8	1.4	2.1	1.8	2.3	1.8	2.6	2.0	2.8	2.1	3.0	2.1	3.4	2.2	3.5	2.3
30	1.6	1.2	1.8	1.4	2.1	1.8	2.3	1.8	2.6	2.0	2.8	2.1	3.0	2.1	3.4	2.2	3.4	2.3
33	1.6	1.2	1.8	1.4	2.1	1.8	2.3	1.8	2.6	2.0	2.8	2.1	3.0	2.1	3.3	2.1	3.3	2.2
35	1.6	1.2	1.8	1.4	2.1	1.8	2.3	1.8	2.6	2.0	2.8	2.1	3.0	2.1	3.2	2.1	3.3	2.2
37	1.6	1.2	1.8	1.4	2.1	1.8	2.3	1.8	2.6	2.0	2.8	2.1	3.0	2.1	3.2	2.1	3.2	2.2
40	1.6	1.2	1.8	1.4	2.1	1.8	2.3	1.8	2.6	2.0	2.8	2.1	3.0	2.1	3.1	2.1	3.1	2.2
43	1.6	1.2	1.8	1.4	2.1	1.8	2.3	1.8	2.6	2.0	2.8	2.1	2.9	2.1	3.0	2.0	3.1	2.1
46	1.6	1.2	1.8	1.4	2.1	1.8	2.3	1.8	2.6	2.0	2.8	2.1	2.8	2.0	2.9	2.0	3.0	2.1

■ Model: AUXN012GLAH

Outdoor temperature	Indoor temperature																	
	18°CDB/14°CWB		20°CDB/15°CWB		23°CDB/16°CWB		24°CDB/17°CWB		26°CDB/18°CWB		27°CDB/19°CWB		28°CDB/20°CWB		30°CDB/22°CWB		32°CDB/23°CWB	
°CDB	TC	SHC	TC	SHC	TC	SHC	TC	SHC	TC	SHC	TC	SHC	TC	SHC	TC	SHC	TC	SHC
-15	2.1	1.8	2.4	2.1	2.7	2.6	3.0	2.7	3.3	3.0	3.6	3.1	3.9	3.1	4.5	3.2	4.8	3.5
-10	2.1	1.8	2.4	2.1	2.7	2.6	3.0	2.7	3.3	3.0	3.6	3.1	3.9	3.1	4.5	3.2	4.8	3.5
-5	2.1	1.8	2.4	2.1	2.7	2.6	3.0	2.7	3.3	3.0	3.6	3.1	3.9	3.1	4.5	3.2	4.8	3.5
0	2.1	1.8	2.4	2.1	2.7	2.6	3.0	2.7	3.3	3.0	3.6	3.1	3.9	3.1	4.5	3.2	4.8	3.5
5	2.1	1.8	2.4	2.1	2.7	2.6	3.0	2.7	3.3	3.0	3.6	3.1	3.9	3.1	4.5	3.2	4.8	3.5
10	2.1	1.8	2.4	2.1	2.7	2.6	3.0	2.7	3.3	3.0	3.6	3.1	3.9	3.1	4.5	3.2	4.8	3.5
15	2.1	1.8	2.4	2.1	2.7	2.6	3.0	2.7	3.3	3.0	3.6	3.1	3.9	3.1	4.5	3.2	4.8	3.5
21	2.1	1.8	2.4	2.1	2.7	2.6	3.0	2.7	3.3	3.0	3.6	3.1	3.9	3.1	4.5	3.2	4.7	3.5
23	2.1	1.8	2.4	2.1	2.7	2.6	3.0	2.7	3.3	3.0	3.6	3.1	3.9	3.1	4.5	3.2	4.6	3.4
25	2.1	1.8	2.4	2.1	2.7	2.6	3.0	2.7	3.3	3.0	3.6	3.1	3.9	3.1	4.5	3.2	4.6	3.4
27	2.1	1.8	2.4	2.1	2.7	2.6	3.0	2.7	3.3	3.0	3.6	3.1	3.9	3.1	4.4	3.2	4.5	3.4
30	2.1	1.8	2.4	2.1	2.7	2.6	3.0	2.7	3.3	3.0	3.6	3.1	3.9	3.1	4.3	3.2	4.4	3.4
33	2.1	1.8	2.4	2.1	2.7	2.6	3.0	2.7	3.3	3.0	3.6	3.1	3.9	3.1	4.2	3.1	4.3	3.3
35	2.1	1.8	2.4	2.1	2.7	2.6	3.0	2.7	3.3	3.0	3.6	3.1	3.9	3.1	4.1	3.1	4.2	3.3
37	2.1	1.8	2.4	2.1	2.7	2.6	3.0	2.7	3.3	3.0	3.6	3.1	3.9	3.1	4.1	3.1	4.1	3.3
40	2.1	1.8	2.4	2.1	2.7	2.6	3.0	2.7	3.3	3.0	3.6	3.1	3.8	3.1	4.0	3.0	4.0	3.2
43	2.1	1.8	2.4	2.1	2.7	2.6	3.0	2.7	3.3	3.0	3.6	3.1	3.7	3.1	3.9	3.0	3.9	3.2
46	2.1	1.8	2.4	2.1	2.7	2.6	3.0	2.7	3.3	3.0	3.5	3.1	3.6	3.0	3.8	3.0	3.8	3.2

■ Model: AUXN014GLAH

Outdoor temperature	Indoor temperature																	
	18°CDB/14°CWB		20°CDB/15°CWB		23°CDB/16°CWB		24°CDB/17°CWB		26°CDB/18°CWB		27°CDB/19°CWB		28°CDB/20°CWB		30°CDB/22°CWB		32°CDB/23°CWB	
°CDB	TC	SHC	TC	SHC	TC	SHC	TC	SHC	TC	SHC	TC	SHC	TC	SHC	TC	SHC	TC	SHC
-15	2.6	2.2	3.0	2.6	3.4	3.3	3.7	3.4	4.1	3.8	4.5	3.9	4.9	3.9	5.6	4.1	6.0	4.4
-10	2.6	2.2	3.0	2.6	3.4	3.3	3.7	3.4	4.1	3.8	4.5	3.9	4.9	3.9	5.6	4.1	6.0	4.4
-5	2.6	2.2	3.0	2.6	3.4	3.3	3.7	3.4	4.1	3.8	4.5	3.9	4.9	3.9	5.6	4.1	6.0	4.4
0	2.6	2.2	3.0	2.6	3.4	3.3	3.7	3.4	4.1	3.8	4.5	3.9	4.9	3.9	5.6	4.1	6.0	4.4
5	2.6	2.2	3.0	2.6	3.4	3.3	3.7	3.4	4.1	3.8	4.5	3.9	4.9	3.9	5.6	4.1	6.0	4.4
10	2.6	2.2	3.0	2.6	3.4	3.3	3.7	3.4	4.1	3.8	4.5	3.9	4.9	3.9	5.6	4.1	6.0	4.4
15	2.6	2.2	3.0	2.6	3.4	3.3	3.7	3.4	4.1	3.8	4.5	3.9	4.9	3.9	5.6	4.1	6.0	4.4
21	2.6	2.2	3.0	2.6	3.4	3.3	3.7	3.4	4.1	3.8	4.5	3.9	4.9	3.9	5.6	4.1	5.9	4.3
23	2.6	2.2	3.0	2.6	3.4	3.3	3.7	3.4	4.1	3.8	4.5	3.9	4.9	3.9	5.6	4.1	5.8	4.3
25	2.6	2.2	3.0	2.6	3.4	3.3	3.7	3.4	4.1	3.8	4.5	3.9	4.9	3.9	5.6	4.1	5.7	4.3
27	2.6	2.2	3.0	2.6	3.4	3.3	3.7	3.4	4.1	3.8	4.5	3.9	4.9	3.9	5.5	4.0	5.6	4.3
30	2.6	2.2	3.0	2.6	3.4	3.3	3.7	3.4	4.1	3.8	4.5	3.9	4.9	3.9	5.4	4.0	5.5	4.2
33	2.6	2.2	3.0	2.6	3.4	3.3	3.7	3.4	4.1	3.8	4.5	3.9	4.9	3.9	5.3	3.9	5.4	4.2
35	2.6	2.2	3.0	2.6	3.4	3.3	3.7	3.4	4.1	3.8	4.5	3.9	4.9	3.9	5.2	3.9	5.3	4.1
37	2.6	2.2	3.0	2.6	3.4	3.3	3.7	3.4	4.1	3.8	4.5	3.9	4.9	3.9	5.1	3.9	5.2	4.1
40	2.6	2.2	3.0	2.6	3.4	3.3	3.7	3.4	4.1	3.8	4.5	3.9	4.8	3.9	5.0	3.8	5.0	4.1
43	2.6	2.2	3.0	2.6	3.4	3.3	3.7	3.4	4.1	3.8	4.5	3.9	4.6	3.9	4.8	3.8	4.9	4.0
46	2.6	2.2	3.0	2.6	3.4	3.3	3.7	3.4	4.1	3.8	4.4	3.8	4.5	3.8	4.7	3.7	4.8	4.0

■ Model: AUXM018GLEH

Outdoor temperature	Indoor temperature																	
	18°CDB/14°CWB		20°CDB/15°CWB		23°CDB/16°CWB		24°CDB/17°CWB		26°CDB/18°CWB		27°CDB/19°CWB		28°CDB/20°CWB		30°CDB/22°CWB		32°CDB/23°CWB	
°CDB	TC	SHC	TC	SHC	TC	SHC	TC	SHC	TC	SHC	TC	SHC	TC	SHC	TC	SHC	TC	SHC
-15	3.2	2.5	3.7	3.0	4.2	3.7	4.6	3.9	5.1	4.3	5.6	4.4	6.1	4.5	7.0	4.6	7.5	5.0
-10	3.2	2.5	3.7	3.0	4.2	3.7	4.6	3.9	5.1	4.3	5.6	4.4	6.1	4.5	7.0	4.6	7.5	5.0
-5	3.2	2.5	3.7	3.0	4.2	3.7	4.6	3.9	5.1	4.3	5.6	4.4	6.1	4.5	7.0	4.6	7.5	5.0
0	3.2	2.5	3.7	3.0	4.2	3.7	4.6	3.9	5.1	4.3	5.6	4.4	6.1	4.5	7.0	4.6	7.5	5.0
5	3.2	2.5	3.7	3.0	4.2	3.7	4.6	3.9	5.1	4.3	5.6	4.4	6.1	4.5	7.0	4.6	7.5	5.0
10	3.2	2.5	3.7	3.0	4.2	3.7	4.6	3.9	5.1	4.3	5.6	4.4	6.1	4.5	7.0	4.6	7.5	5.0
15	3.2	2.5	3.7	3.0	4.2	3.7	4.6	3.9	5.1	4.3	5.6	4.4	6.1	4.5	7.0	4.6	7.5	5.0
21	3.2	2.5	3.7	3.0	4.2	3.7	4.6	3.9	5.1	4.3	5.6	4.4	6.1	4.5	7.0	4.6	7.3	4.9
23	3.2	2.5	3.7	3.0	4.2	3.7	4.6	3.9	5.1	4.3	5.6	4.4	6.1	4.5	7.0	4.6	7.2	4.9
25	3.2	2.5	3.7	3.0	4.2	3.7	4.6	3.9	5.1	4.3	5.6	4.4	6.1	4.5	7.0	4.6	7.1	4.8
27	3.2	2.5	3.7	3.0	4.2	3.7	4.6	3.9	5.1	4.3	5.6	4.4	6.1	4.5	6.8	4.6	7.0	4.8
30	3.2	2.5	3.7	3.0	4.2	3.7	4.6	3.9	5.1	4.3	5.6	4.4	6.1	4.5	6.7	4.5	6.8	4.7
33	3.2	2.5	3.7	3.0	4.2	3.7	4.6	3.9	5.1	4.3	5.6	4.4	6.1	4.5	6.5	4.5	6.7	4.7
35	3.2	2.5	3.7	3.0	4.2	3.7	4.6	3.9	5.1	4.3	5.6	4.4	6.1	4.5	6.4	4.4	6.5	4.6
37	3.2	2.5	3.7	3.0	4.2	3.7	4.6	3.9	5.1	4.3	5.6	4.4	6.1	4.5	6.3	4.4	6.4	4.6
40	3.2	2.5	3.7	3.0	4.2	3.7	4.6	3.9	5.1	4.3	5.6	4.4	5.9	4.4	6.2	4.3	6.3	4.6
43	3.2	2.5	3.7	3.0	4.2	3.7	4.6	3.9	5.1	4.3	5.6	4.4	5.8	4.4	6.0	4.3	6.1	4.5
46	3.2	2.5	3.7	3.0	4.2	3.7	4.6	3.9	5.1	4.3	5.5	4.3	5.6	4.3	5.8	4.2	5.9	4.4

■ Model: AUXM024GLEH

Outdoor temperature	Indoor temperature																	
	18°CDB/14°CWB		20°CDB/15°CWB		23°CDB/16°CWB		24°CDB/17°CWB		26°CDB/18°CWB		27°CDB/19°CWB		28°CDB/20°CWB		30°CDB/22°CWB		32°CDB/23°CWB	
°CDB	TC	SHC	TC	SHC	TC	SHC	TC	SHC	TC	SHC	TC	SHC	TC	SHC	TC	SHC	TC	SHC
-15	4.1	3.0	4.7	3.5	5.3	4.3	5.9	4.5	6.5	5.0	7.1	5.1	7.7	5.3	8.9	5.5	9.5	5.9
-10	4.1	3.0	4.7	3.5	5.3	4.3	5.9	4.5	6.5	5.0	7.1	5.1	7.7	5.3	8.9	5.5	9.5	5.9
-5	4.1	3.0	4.7	3.5	5.3	4.3	5.9	4.5	6.5	5.0	7.1	5.1	7.7	5.3	8.9	5.5	9.5	5.9
0	4.1	3.0	4.7	3.5	5.3	4.3	5.9	4.5	6.5	5.0	7.1	5.1	7.7	5.3	8.9	5.5	9.5	5.9
5	4.1	3.0	4.7	3.5	5.3	4.3	5.9	4.5	6.5	5.0	7.1	5.1	7.7	5.3	8.9	5.5	9.5	5.9
10	4.1	3.0	4.7	3.5	5.3	4.3	5.9	4.5	6.5	5.0	7.1	5.1	7.7	5.3	8.9	5.5	9.5	5.9
15	4.1	3.0	4.7	3.5	5.3	4.3	5.9	4.5	6.5	5.0	7.1	5.1	7.7	5.3	8.9	5.5	9.5	5.9
21	4.1	3.0	4.7	3.5	5.3	4.3	5.9	4.5	6.5	5.0	7.1	5.1	7.7	5.3	8.9	5.5	9.3	5.8
23	4.1	3.0	4.7	3.5	5.3	4.3	5.9	4.5	6.5	5.0	7.1	5.1	7.7	5.3	8.9	5.5	9.1	5.7
25	4.1	3.0	4.7	3.5	5.3	4.3	5.9	4.5	6.5	5.0	7.1	5.1	7.7	5.3	8.8	5.5	9.0	5.7
27	4.1	3.0	4.7	3.5	5.3	4.3	5.9	4.5	6.5	5.0	7.1	5.1	7.7	5.3	8.7	5.4	8.8	5.6
30	4.1	3.0	4.7	3.5	5.3	4.3	5.9	4.5	6.5	5.0	7.1	5.1	7.7	5.3	8.5	5.3	8.6	5.5
33	4.1	3.0	4.7	3.5	5.3	4.3	5.9	4.5	6.5	5.0	7.1	5.1	7.7	5.3	8.3	5.2	8.4	5.5
35	4.1	3.0	4.7	3.5	5.3	4.3	5.9	4.5	6.5	5.0	7.1	5.1	7.7	5.3	8.1	5.2	8.3	5.4
37	4.1	3.0	4.7	3.5	5.3	4.3	5.9	4.5	6.5	5.0	7.1	5.1	7.7	5.3	8.0	5.1	8.2	5.4
40	4.1	3.0	4.7	3.5	5.3	4.3	5.9	4.5	6.5	5.0	7.1	5.1	7.5	5.2	7.8	5.1	8.0	5.3
43	4.1	3.0	4.7	3.5	5.3	4.3	5.9	4.5	6.5	5.0	7.1	5.1	7.3	5.1	7.6	5.0	7.8	5.2
46	4.1	3.0	4.7	3.5	5.3	4.3	5.9	4.5	6.5	5.0	7.0	5.1	7.1	5.0	7.4	4.9	7.5	5.1

■ Model: AUXM030GLEH

Outdoor temperature	Indoor temperature																	
	18°CDB/14°CWB		20°CDB/15°CWB		23°CDB/16°CWB		24°CDB/17°CWB		26°CDB/18°CWB		27°CDB/19°CWB		28°CDB/20°CWB		30°CDB/22°CWB		32°CDB/23°CWB	
°CDB	TC	SHC	TC	SHC	TC	SHC	TC	SHC	TC	SHC	TC	SHC	TC	SHC	TC	SHC	TC	SHC
-15	5.2	3.9	5.9	4.6	6.7	5.7	7.5	5.9	8.2	6.6	9.0	6.8	9.7	6.9	11.3	7.2	12.1	7.7
-10	5.2	3.9	5.9	4.6	6.7	5.7	7.5	5.9	8.2	6.6	9.0	6.8	9.7	6.9	11.3	7.2	12.1	7.7
-5	5.2	3.9	5.9	4.6	6.7	5.7	7.5	5.9	8.2	6.6	9.0	6.8	9.7	6.9	11.3	7.2	12.1	7.7
0	5.2	3.9	5.9	4.6	6.7	5.7	7.5	5.9	8.2	6.6	9.0	6.8	9.7	6.9	11.3	7.2	12.1	7.7
5	5.2	3.9	5.9	4.6	6.7	5.7	7.5	5.9	8.2	6.6	9.0	6.8	9.7	6.9	11.3	7.2	12.1	7.7
10	5.2	3.9	5.9	4.6	6.7	5.7	7.5	5.9	8.2	6.6	9.0	6.8	9.7	6.9	11.3	7.2	12.1	7.7
15	5.2	3.9	5.9	4.6	6.7	5.7	7.5	5.9	8.2	6.6	9.0	6.8	9.7	6.9	11.3	7.2	12.1	7.7
21	5.2	3.9	5.9	4.6	6.7	5.7	7.5	5.9	8.2	6.6	9.0	6.8	9.7	6.9	11.3	7.2	11.7	7.6
23	5.2	3.9	5.9	4.6	6.7	5.7	7.5	5.9	8.2	6.6	9.0	6.8	9.7	6.9	11.3	7.2	11.5	7.5
25	5.2	3.9	5.9	4.6	6.7	5.7	7.5	5.9	8.2	6.6	9.0	6.8	9.7	6.9	11.2	7.1	11.4	7.5
27	5.2	3.9	5.9	4.6	6.7	5.7	7.5	5.9	8.2	6.6	9.0	6.8	9.7	6.9	11.0	7.1	11.2	7.4
30	5.2	3.9	5.9	4.6	6.7	5.7	7.5	5.9	8.2	6.6	9.0	6.8	9.7	6.9	10.8	7.0	11.0	7.3
33	5.2	3.9	5.9	4.6	6.7	5.7	7.5	5.9	8.2	6.6	9.0	6.8	9.7	6.9	10.5	6.9	10.7	7.2
35	5.2	3.9	5.9	4.6	6.7	5.7	7.5	5.9	8.2	6.6	9.0	6.8	9.7	6.9	10.3	6.8	10.5	7.2
37	5.2	3.9	5.9	4.6	6.7	5.7	7.5	5.9	8.2	6.6	9.0	6.8	9.7	6.9	10.2	6.8	10.4	7.1
40	5.2	3.9	5.9	4.6	6.7	5.7	7.5	5.9	8.2	6.6	9.0	6.8	9.5	6.8	9.9	6.7	10.1	7.0
43	5.2	3.9	5.9	4.6	6.7	5.7	7.5	5.9	8.2	6.6	9.0	6.8	9.3	6.7	9.6	6.6	9.8	6.9
46	5.2	3.9	5.9	4.6	6.7	5.7	7.5	5.9	8.2	6.6	8.8	6.7	9.0	6.6	9.4	6.5	9.5	6.8

■ Model: AUXK018GLEH

Outdoor temperature	Indoor temperature																	
	18°CDB/14°CWB		20°CDB/15°CWB		23°CDB/16°CWB		24°CDB/17°CWB		26°CDB/18°CWB		27°CDB/19°CWB		28°CDB/20°CWB		30°CDB/22°CWB		32°CDB/23°CWB	
°CDB	TC	SHC	TC	SHC	TC	SHC	TC	SHC	TC	SHC	TC	SHC	TC	SHC	TC	SHC	TC	SHC
-15	3.2	2.3	3.7	2.7	4.2	3.3	4.6	3.5	5.1	3.9	5.6	4.0	6.1	4.1	7.0	4.3	7.5	4.6
-10	3.2	2.3	3.7	2.7	4.2	3.3	4.6	3.5	5.1	3.9	5.6	4.0	6.1	4.1	7.0	4.3	7.5	4.6
-5	3.2	2.3	3.7	2.7	4.2	3.3	4.6	3.5	5.1	3.9	5.6	4.0	6.1	4.1	7.0	4.3	7.5	4.6
0	3.2	2.3	3.7	2.7	4.2	3.3	4.6	3.5	5.1	3.9	5.6	4.0	6.1	4.1	7.0	4.3	7.5	4.6
5	3.2	2.3	3.7	2.7	4.2	3.3	4.6	3.5	5.1	3.9	5.6	4.0	6.1	4.1	7.0	4.3	7.5	4.6
10	3.2	2.3	3.7	2.7	4.2	3.3	4.6	3.5	5.1	3.9	5.6	4.0	6.1	4.1	7.0	4.3	7.5	4.6
15	3.2	2.3	3.7	2.7	4.2	3.3	4.6	3.5	5.1	3.9	5.6	4.0	6.1	4.1	7.0	4.3	7.5	4.6
21	3.2	2.3	3.7	2.7	4.2	3.3	4.6	3.5	5.1	3.9	5.6	4.0	6.1	4.1	7.0	4.3	7.3	4.5
23	3.2	2.3	3.7	2.7	4.2	3.3	4.6	3.5	5.1	3.9	5.6	4.0	6.1	4.1	7.0	4.3	7.2	4.5
25	3.2	2.3	3.7	2.7	4.2	3.3	4.6	3.5	5.1	3.9	5.6	4.0	6.1	4.1	7.0	4.2	7.1	4.4
27	3.2	2.3	3.7	2.7	4.2	3.3	4.6	3.5	5.1	3.9	5.6	4.0	6.1	4.1	6.8	4.2	7.0	4.4
30	3.2	2.3	3.7	2.7	4.2	3.3	4.6	3.5	5.1	3.9	5.6	4.0	6.1	4.1	6.7	4.1	6.8	4.3
33	3.2	2.3	3.7	2.7	4.2	3.3	4.6	3.5	5.1	3.9	5.6	4.0	6.1	4.1	6.5	4.1	6.7	4.3
35	3.2	2.3	3.7	2.7	4.2	3.3	4.6	3.5	5.1	3.9	5.6	4.0	6.1	4.1	6.4	4.0	6.5	4.2
37	3.2	2.3	3.7	2.7	4.2	3.3	4.6	3.5	5.1	3.9	5.6	4.0	6.1	4.1	6.3	4.0	6.4	4.2
40	3.2	2.3	3.7	2.7	4.2	3.3	4.6	3.5	5.1	3.9	5.6	4.0	5.9	4.0	6.2	3.9	6.3	4.1
43	3.2	2.3	3.7	2.7	4.2	3.3	4.6	3.5	5.1	3.9	5.6	4.0	5.8	4.0	6.0	3.9	6.1	4.0
46	3.2	2.3	3.7	2.7	4.2	3.3	4.6	3.5	5.1	3.9	5.5	3.9	5.6	3.9	5.8	3.8	5.9	4.0

■ Model: AUXK024GLEH

Outdoor temperature	Indoor temperature																	
	18°CDB/14°CWB		20°CDB/15°CWB		23°CDB/16°CWB		24°CDB/17°CWB		26°CDB/18°CWB		27°CDB/19°CWB		28°CDB/20°CWB		30°CDB/22°CWB		32°CDB/23°CWB	
°CDB	TC	SHC	TC	SHC	TC	SHC	TC	SHC	TC	SHC	TC	SHC	TC	SHC	TC	SHC	TC	SHC
-15	4.1	3.0	4.7	3.5	5.3	4.4	5.9	4.6	6.5	5.0	7.1	5.2	7.7	5.3	8.9	5.5	9.5	5.9
-10	4.1	3.0	4.7	3.5	5.3	4.4	5.9	4.6	6.5	5.0	7.1	5.2	7.7	5.3	8.9	5.5	9.5	5.9
-5	4.1	3.0	4.7	3.5	5.3	4.4	5.9	4.6	6.5	5.0	7.1	5.2	7.7	5.3	8.9	5.5	9.5	5.9
0	4.1	3.0	4.7	3.5	5.3	4.4	5.9	4.6	6.5	5.0	7.1	5.2	7.7	5.3	8.9	5.5	9.5	5.9
5	4.1	3.0	4.7	3.5	5.3	4.4	5.9	4.6	6.5	5.0	7.1	5.2	7.7	5.3	8.9	5.5	9.5	5.9
10	4.1	3.0	4.7	3.5	5.3	4.4	5.9	4.6	6.5	5.0	7.1	5.2	7.7	5.3	8.9	5.5	9.5	5.9
15	4.1	3.0	4.7	3.5	5.3	4.4	5.9	4.6	6.5	5.0	7.1	5.2	7.7	5.3	8.9	5.5	9.5	5.9
21	4.1	3.0	4.7	3.5	5.3	4.4	5.9	4.6	6.5	5.0	7.1	5.2	7.7	5.3	8.9	5.5	9.3	5.8
23	4.1	3.0	4.7	3.5	5.3	4.4	5.9	4.6	6.5	5.0	7.1	5.2	7.7	5.3	8.9	5.5	9.1	5.8
25	4.1	3.0	4.7	3.5	5.3	4.4	5.9	4.6	6.5	5.0	7.1	5.2	7.7	5.3	8.8	5.5	9.0	5.7
27	4.1	3.0	4.7	3.5	5.3	4.4	5.9	4.6	6.5	5.0	7.1	5.2	7.7	5.3	8.7	5.4	8.8	5.7
30	4.1	3.0	4.7	3.5	5.3	4.4	5.9	4.6	6.5	5.0	7.1	5.2	7.7	5.3	8.5	5.4	8.6	5.6
33	4.1	3.0	4.7	3.5	5.3	4.4	5.9	4.6	6.5	5.0	7.1	5.2	7.7	5.3	8.3	5.3	8.4	5.5
35	4.1	3.0	4.7	3.5	5.3	4.4	5.9	4.6	6.5	5.0	7.1	5.2	7.7	5.3	8.1	5.2	8.3	5.5
37	4.1	3.0	4.7	3.5	5.3	4.4	5.9	4.6	6.5	5.0	7.1	5.2	7.7	5.3	8.0	5.2	8.2	5.4
40	4.1	3.0	4.7	3.5	5.3	4.4	5.9	4.6	6.5	5.0	7.1	5.2	7.5	5.2	7.8	5.1	8.0	5.4
43	4.1	3.0	4.7	3.5	5.3	4.4	5.9	4.6	6.5	5.0	7.1	5.2	7.3	5.2	7.6	5.0	7.8	5.3
46	4.1	3.0	4.7	3.5	5.3	4.4	5.9	4.6	6.5	5.0	7.0	5.1	7.1	5.1	7.4	5.0	7.5	5.2

■ Model: AUXK030GLEH

Outdoor temperature	Indoor temperature																	
	18°CDB/14°CWB		20°CDB/15°CWB		23°CDB/16°CWB		24°CDB/17°CWB		26°CDB/18°CWB		27°CDB/19°CWB		28°CDB/20°CWB		30°CDB/22°CWB		32°CDB/23°CWB	
°CDB	TC	SHC	TC	SHC	TC	SHC	TC	SHC	TC	SHC	TC	SHC	TC	SHC	TC	SHC	TC	SHC
-15	5.2	3.7	5.9	4.3	6.7	5.3	7.5	5.5	8.2	6.1	9.0	6.3	9.7	6.4	11.3	6.7	12.1	7.2
-10	5.2	3.7	5.9	4.3	6.7	5.3	7.5	5.5	8.2	6.1	9.0	6.3	9.7	6.4	11.3	6.7	12.1	7.2
-5	5.2	3.7	5.9	4.3	6.7	5.3	7.5	5.5	8.2	6.1	9.0	6.3	9.7	6.4	11.3	6.7	12.1	7.2
0	5.2	3.7	5.9	4.3	6.7	5.3	7.5	5.5	8.2	6.1	9.0	6.3	9.7	6.4	11.3	6.7	12.1	7.2
5	5.2	3.7	5.9	4.3	6.7	5.3	7.5	5.5	8.2	6.1	9.0	6.3	9.7	6.4	11.3	6.7	12.1	7.2
10	5.2	3.7	5.9	4.3	6.7	5.3	7.5	5.5	8.2	6.1	9.0	6.3	9.7	6.4	11.3	6.7	12.1	7.2
15	5.2	3.7	5.9	4.3	6.7	5.3	7.5	5.5	8.2	6.1	9.0	6.3	9.7	6.4	11.3	6.7	12.1	7.2
21	5.2	3.7	5.9	4.3	6.7	5.3	7.5	5.5	8.2	6.1	9.0	6.3	9.7	6.4	11.3	6.7	11.7	7.1
23	5.2	3.7	5.9	4.3	6.7	5.3	7.5	5.5	8.2	6.1	9.0	6.3	9.7	6.4	11.3	6.7	11.5	7.0
25	5.2	3.7	5.9	4.3	6.7	5.3	7.5	5.5	8.2	6.1	9.0	6.3	9.7	6.4	11.2	6.7	11.4	6.9
27	5.2	3.7	5.9	4.3	6.7	5.3	7.5	5.5	8.2	6.1	9.0	6.3	9.7	6.4	11.0	6.6	11.2	6.9
30	5.2	3.7	5.9	4.3	6.7	5.3	7.5	5.5	8.2	6.1	9.0	6.3	9.7	6.4	10.8	6.5	11.0	6.8
33	5.2	3.7	5.9	4.3	6.7	5.3	7.5	5.5	8.2	6.1	9.0	6.3	9.7	6.4	10.5	6.4	10.7	6.7
35	5.2	3.7	5.9	4.3	6.7	5.3	7.5	5.5	8.2	6.1	9.0	6.3	9.7	6.4	10.3	6.3	10.5	6.6
37	5.2	3.7	5.9	4.3	6.7	5.3	7.5	5.5	8.2	6.1	9.0	6.3	9.7	6.4	10.2	6.3	10.4	6.5
40	5.2	3.7	5.9	4.3	6.7	5.3	7.5	5.5	8.2	6.1	9.0	6.3	9.5	6.3	9.9	6.2	10.1	6.4
43	5.2	3.7	5.9	4.3	6.7	5.3	7.5	5.5	8.2	6.1	9.0	6.3	9.3	6.2	9.6	6.1	9.8	6.3
46	5.2	3.7	5.9	4.3	6.7	5.3	7.5	5.5	8.2	6.1	8.8	6.2	9.0	6.1	9.4	6.0	9.5	6.2

■ Model: AUXK034GLEH

Outdoor temperature	Indoor temperature																	
	18°CDB/14°CWB		20°CDB/15°CWB		23°CDB/16°CWB		24°CDB/17°CWB		26°CDB/18°CWB		27°CDB/19°CWB		28°CDB/20°CWB		30°CDB/22°CWB		32°CDB/23°CWB	
°CDB	TC	SHC	TC	SHC	TC	SHC	TC	SHC	TC	SHC	TC	SHC	TC	SHC	TC	SHC	TC	SHC
-15	5.7	4.1	6.6	4.8	7.4	5.9	8.3	6.1	9.1	6.8	10.0	7.0	10.8	7.2	12.5	7.5	13.4	8.1
-10	5.7	4.1	6.6	4.8	7.4	5.9	8.3	6.1	9.1	6.8	10.0	7.0	10.8	7.2	12.5	7.5	13.4	8.1
-5	5.7	4.1	6.6	4.8	7.4	5.9	8.3	6.1	9.1	6.8	10.0	7.0	10.8	7.2	12.5	7.5	13.4	8.1
0	5.7	4.1	6.6	4.8	7.4	5.9	8.3	6.1	9.1	6.8	10.0	7.0	10.8	7.2	12.5	7.5	13.4	8.1
5	5.7	4.1	6.6	4.8	7.4	5.9	8.3	6.1	9.1	6.8	10.0	7.0	10.8	7.2	12.5	7.5	13.4	8.1
10	5.7	4.1	6.6	4.8	7.4	5.9	8.3	6.1	9.1	6.8	10.0	7.0	10.8	7.2	12.5	7.5	13.4	8.1
15	5.7	4.1	6.6	4.8	7.4	5.9	8.3	6.1	9.1	6.8	10.0	7.0	10.8	7.2	12.5	7.5	13.4	8.1
21	5.7	4.1	6.6	4.8	7.4	5.9	8.3	6.1	9.1	6.8	10.0	7.0	10.8	7.2	12.5	7.5	13.0	7.9
23	5.7	4.1	6.6	4.8	7.4	5.9	8.3	6.1	9.1	6.8	10.0	7.0	10.8	7.2	12.5	7.5	12.8	7.8
25	5.7	4.1	6.6	4.8	7.4	5.9	8.3	6.1	9.1	6.8	10.0	7.0	10.8	7.2	12.4	7.5	12.6	7.8
27	5.7	4.1	6.6	4.8	7.4	5.9	8.3	6.1	9.1	6.8	10.0	7.0	10.8	7.2	12.2	7.4	12.5	7.7
30	5.7	4.1	6.6	4.8	7.4	5.9	8.3	6.1	9.1	6.8	10.0	7.0	10.8	7.2	12.0	7.3	12.2	7.6
33	5.7	4.1	6.6	4.8	7.4	5.9	8.3	6.1	9.1	6.8	10.0	7.0	10.8	7.2	11.7	7.2	11.9	7.5
35	5.7	4.1	6.6	4.8	7.4	5.9	8.3	6.1	9.1	6.8	10.0	7.0	10.8	7.2	11.5	7.1	11.7	7.4
37	5.7	4.1	6.6	4.8	7.4	5.9	8.3	6.1	9.1	6.8	10.0	7.0	10.8	7.2	11.3	7.0	11.5	7.3
40	5.7	4.1	6.6	4.8	7.4	5.9	8.3	6.1	9.1	6.8	10.0	7.0	10.6	7.1	11.0	6.9	11.2	7.2
43	5.7	4.1	6.6	4.8	7.4	5.9	8.3	6.1	9.1	6.8	10.0	7.0	10.3	7.0	10.7	6.8	10.9	7.1
46	5.7	4.1	6.6	4.8	7.4	5.9	8.3	6.1	9.1	6.8	9.8	6.9	10.0	6.8	10.4	6.7	10.6	7.0

■ Model: AUXK036GLEH

Outdoor temperature	Indoor temperature																	
	18°CDB/14°CWB		20°CDB/15°CWB		23°CDB/16°CWB		24°CDB/17°CWB		26°CDB/18°CWB		27°CDB/19°CWB		28°CDB/20°CWB		30°CDB/22°CWB		32°CDB/23°CWB	
°CDB	TC	SHC	TC	SHC	TC	SHC	TC	SHC	TC	SHC	TC	SHC	TC	SHC	TC	SHC	TC	SHC
-15	6.4	4.7	7.4	5.4	8.3	6.7	9.3	7.0	10.2	7.7	11.2	8.0	12.1	8.2	14.0	8.5	15.0	9.1
-10	6.4	4.7	7.4	5.4	8.3	6.7	9.3	7.0	10.2	7.7	11.2	8.0	12.1	8.2	14.0	8.5	15.0	9.1
-5	6.4	4.7	7.4	5.4	8.3	6.7	9.3	7.0	10.2	7.7	11.2	8.0	12.1	8.2	14.0	8.5	15.0	9.1
0	6.4	4.7	7.4	5.4	8.3	6.7	9.3	7.0	10.2	7.7	11.2	8.0	12.1	8.2	14.0	8.5	15.0	9.1
5	6.4	4.7	7.4	5.4	8.3	6.7	9.3	7.0	10.2	7.7	11.2	8.0	12.1	8.2	14.0	8.5	15.0	9.1
10	6.4	4.7	7.4	5.4	8.3	6.7	9.3	7.0	10.2	7.7	11.2	8.0	12.1	8.2	14.0	8.5	15.0	9.1
15	6.4	4.7	7.4	5.4	8.3	6.7	9.3	7.0	10.2	7.7	11.2	8.0	12.1	8.2	14.0	8.5	15.0	9.1
21	6.4	4.7	7.4	5.4	8.3	6.7	9.3	7.0	10.2	7.7	11.2	8.0	12.1	8.2	14.0	8.5	14.6	9.0
23	6.4	4.7	7.4	5.4	8.3	6.7	9.3	7.0	10.2	7.7	11.2	8.0	12.1	8.2	14.0	8.5	14.4	8.9
25	6.4	4.7	7.4	5.4	8.3	6.7	9.3	7.0	10.2	7.7	11.2	8.0	12.1	8.2	13.9	8.5	14.2	8.8
27	6.4	4.7	7.4	5.4	8.3	6.7	9.3	7.0	10.2	7.7	11.2	8.0	12.1	8.2	13.7	8.4	14.0	8.7
30	6.4	4.6	7.4	5.4	8.3	6.7	9.3	7.0	10.2	7.7	11.2	8.0	12.1	8.2	13.4	8.3	13.6	8.6
33	6.4	4.7	7.4	5.4	8.3	6.7	9.3	7.0	10.2	7.7	11.2	8.0	12.1	8.2	13.1	8.1	13.3	8.5
35	6.4	4.7	7.4	5.4	8.3	6.7	9.3	7.0	10.2	7.7	11.2	8.0	12.1	8.2	12.8	8.0	13.1	8.4
37	6.4	4.7	7.4	5.4	8.3	6.7	9.3	7.0	10.2	7.7	11.2	8.0	12.1	8.2	12.6	8.0	12.9	8.3
40	6.4	4.7	7.4	5.4	8.3	6.7	9.3	7.0	10.2	7.7	11.2	8.0	11.8	8.0	12.3	7.8	12.6	8.2
43	6.4	4.7	7.4	5.4	8.3	6.7	9.3	7.0	10.2	7.7	11.2	8.0	11.5	7.9	12.0	7.7	12.2	8.1
46	6.4	4.7	7.4	5.4	8.3	6.7	9.3	7.0	10.2	7.7	11.0	7.9	11.2	7.8	11.7	7.6	11.9	8.0

■ Model: AUXK045GLEH

Outdoor temperature	Indoor temperature																	
	18°CDB/14°CWB		20°CDB/15°CWB		23°CDB/16°CWB		24°CDB/17°CWB		26°CDB/18°CWB		27°CDB/19°CWB		28°CDB/20°CWB		30°CDB/22°CWB		32°CDB/23°CWB	
°CDB	TC	SHC	TC	SHC	TC	SHC	TC	SHC	TC	SHC	TC	SHC	TC	SHC	TC	SHC	TC	SHC
-15	7.2	5.2	8.2	6.2	9.3	7.6	10.4	7.9	11.4	8.7	12.5	9.0	13.5	9.2	15.7	9.6	16.7	10.3
-10	7.2	5.2	8.2	6.2	9.3	7.6	10.4	7.9	11.4	8.7	12.5	9.0	13.5	9.2	15.7	9.6	16.7	10.3
-5	7.2	5.2	8.2	6.2	9.3	7.6	10.4	7.9	11.4	8.7	12.5	9.0	13.5	9.2	15.7	9.6	16.7	10.3
0	7.2	5.2	8.2	6.2	9.3	7.6	10.4	7.9	11.4	8.7	12.5	9.0	13.5	9.2	15.7	9.6	16.7	10.3
5	7.2	5.2	8.2	6.2	9.3	7.6	10.4	7.9	11.4	8.7	12.5	9.0	13.5	9.2	15.7	9.6	16.7	10.3
10	7.2	5.2	8.2	6.2	9.3	7.6	10.4	7.9	11.4	8.7	12.5	9.0	13.5	9.2	15.7	9.6	16.7	10.3
15	7.2	5.2	8.2	6.2	9.3	7.6	10.4	7.9	11.4	8.7	12.5	9.0	13.5	9.2	15.7	9.6	16.7	10.3
21	7.2	5.2	8.2	6.2	9.3	7.6	10.4	7.9	11.4	8.7	12.5	9.0	13.5	9.2	15.7	9.6	16.3	10.1
23	7.2	5.2	8.2	6.2	9.3	7.6	10.4	7.9	11.4	8.7	12.5	9.0	13.5	9.2	15.7	9.6	16.0	10.0
25	7.2	5.2	8.2	6.2	9.3	7.6	10.4	7.9	11.4	8.7	12.5	9.0	13.5	9.2	15.5	9.6	15.8	9.9
27	7.2	5.2	8.2	6.2	9.3	7.6	10.4	7.9	11.4	8.7	12.5	9.0	13.5	9.2	15.3	9.4	15.6	9.9
30	7.2	5.2	8.2	6.2	9.3	7.6	10.4	7.9	11.4	8.7	12.5	9.0	13.5	9.2	15.0	9.3	15.2	9.7
33	7.2	5.2	8.2	6.2	9.3	7.6	10.4	7.9	11.4	8.7	12.5	9.0	13.5	9.2	14.6	9.2	14.9	9.6
35	7.2	5.2	8.2	6.2	9.3	7.6	10.4	7.9	11.4	8.7	12.5	9.0	13.5	9.2	14.3	9.1	14.6	9.5
37	7.2	5.2	8.2	6.2	9.3	7.6	10.4	7.9	11.4	8.7	12.5	9.0	13.5	9.2	14.1	9.0	14.4	9.4
40	7.2	5.2	8.2	6.2	9.3	7.6	10.4	7.9	11.4	8.7	12.5	9.0	13.2	9.1	13.8	8.9	14.0	9.3
43	7.2	5.2	8.2	6.2	9.3	7.6	10.4	7.9	11.4	8.7	12.5	9.0	12.9	8.9	13.4	8.7	13.7	9.1
46	7.2	5.2	8.2	6.2	9.3	7.6	10.4	7.9	11.4	8.7	12.3	8.9	12.5	8.8	13.0	8.6	13.3	9.0

■ Model: AUXK054GLEH

Outdoor temperature	Indoor temperature																	
	18°CDB/14°CWB		20°CDB/15°CWB		23°CDB/16°CWB		24°CDB/17°CWB		26°CDB/18°CWB		27°CDB/19°CWB		28°CDB/20°CWB		30°CDB/22°CWB		32°CDB/23°CWB	
°CDB	TC	SHC	TC	SHC	TC	SHC	TC	SHC	TC	SHC	TC	SHC	TC	SHC	TC	SHC	TC	SHC
-15	8.0	6.0	9.2	7.0	10.4	8.7	11.6	9.0	12.8	10.0	14.0	10.2	15.2	10.5	17.6	10.9	18.8	11.7
-10	8.0	6.0	9.2	7.0	10.4	8.7	11.6	9.0	12.8	10.0	14.0	10.2	15.2	10.5	17.6	10.9	18.8	11.7
-5	8.0	6.0	9.2	7.0	10.4	8.7	11.6	9.0	12.8	10.0	14.0	10.2	15.2	10.5	17.6	10.9	18.8	11.7
0	8.0	6.0	9.2	7.0	10.4	8.7	11.6	9.0	12.8	10.0	14.0	10.2	15.2	10.5	17.6	10.9	18.8	11.7
5	8.0	6.0	9.2	7.0	10.4	8.7	11.6	9.0	12.8	10.0	14.0	10.2	15.2	10.5	17.6	10.9	18.8	11.7
10	8.0	6.0	9.2	7.0	10.4	8.7	11.6	9.0	12.8	10.0	14.0	10.2	15.2	10.5	17.6	10.9	18.8	11.7
15	8.0	6.0	9.2	7.0	10.4	8.7	11.6	9.0	12.8	10.0	14.0	10.2	15.2	10.5	17.6	10.9	18.8	11.7
21	8.0	6.0	9.2	7.0	10.4	8.7	11.6	9.0	12.8	10.0	14.0	10.2	15.2	10.5	17.6	10.9	18.3	11.5
23	8.0	6.0	9.2	7.0	10.4	8.7	11.6	9.0	12.8	10.0	14.0	10.2	15.2	10.5	17.6	10.9	18.0	11.4
25	8.0	6.0	9.2	7.0	10.4	8.7	11.6	9.0	12.8	10.0	14.0	10.2	15.2	10.5	17.4	10.9	17.7	11.3
27	8.0	6.0	9.2	7.0	10.4	8.7	11.6	9.0	12.8	10.0	14.0	10.2	15.2	10.5	17.1	10.8	17.5	11.2
30	8.0	6.0	9.2	7.0	10.4	8.7	11.6	9.0	12.8	10.0	14.0	10.2	15.2	10.5	16.8	10.6	17.1	11.1
33	8.0	6.0	9.2	7.0	10.4	8.7	11.6	9.0	12.8	10.0	14.0	10.2	15.2	10.5	16.4	10.5	16.7	10.9
35	8.0	6.0	9.2	7.0	10.4	8.7	11.6	9.0	12.8	10.0	14.0	10.2	15.2	10.5	16.1	10.3	16.4	10.8
37	8.0	6.0	9.2	7.0	10.4	8.7	11.6	9.0	12.8	10.0	14.0	10.2	15.2	10.5	15.8	10.2	16.1	10.7
40	8.0	6.0	9.2	7.0	10.4	8.7	11.6	9.0	12.8	10.0	14.0	10.2	14.8	10.3	15.4	10.1	15.7	10.6
43	8.0	6.0	9.2	7.0	10.4	8.7	11.6	9.0	12.8	10.0	14.0	10.2	14.4	10.2	15.0	9.9	15.3	10.4
46	8.0	6.0	9.2	7.0	10.4	8.7	11.6	9.0	12.8	10.0	13.8	10.1	14.0	10.0	14.6	9.8	14.9	10.3

2-4. 3D flow cassette type

■ Model: AUXS018GLEH

Outdoor temperature	Indoor temperature																	
	18°CDB/14°CWB		20°CDB/15°CWB		23°CDB/16°CWB		24°CDB/17°CWB		26°CDB/18°CWB		27°CDB/19°CWB		28°CDB/20°CWB		30°CDB/22°CWB		32°CDB/23°CWB	
°CDB	TC	SHC	TC	SHC	TC	SHC	TC	SHC	TC	SHC	TC	SHC	TC	SHC	TC	SHC	TC	SHC
10	3.2	2.4	3.7	2.8	4.2	3.4	4.6	3.6	5.1	3.9	5.6	4.1	6.1	4.2	7.0	4.3	7.5	4.7
15	3.2	2.4	3.7	2.8	4.2	3.4	4.6	3.6	5.1	3.9	5.6	4.1	6.1	4.2	7.0	4.3	7.5	4.7
21	3.2	2.4	3.7	2.8	4.2	3.4	4.6	3.6	5.1	3.9	5.6	4.1	6.1	4.2	7.0	4.3	7.3	4.6
23	3.2	2.4	3.7	2.8	4.2	3.4	4.6	3.6	5.1	3.9	5.6	4.1	6.1	4.2	7.0	4.3	7.2	4.5
25	3.2	2.4	3.7	2.8	4.2	3.4	4.6	3.6	5.1	3.9	5.6	4.1	6.1	4.2	7.0	4.3	7.1	4.5
27	3.2	2.4	3.7	2.8	4.2	3.4	4.6	3.6	5.1	3.9	5.6	4.1	6.1	4.2	6.8	4.3	7.0	4.5
30	3.2	2.4	3.7	2.8	4.2	3.4	4.6	3.6	5.1	3.9	5.6	4.1	6.1	4.2	6.7	4.2	6.8	4.4
33	3.2	2.4	3.7	2.8	4.2	3.4	4.6	3.6	5.1	3.9	5.6	4.1	6.1	4.2	6.5	4.1	6.7	4.3
35	3.2	2.4	3.7	2.8	4.2	3.4	4.6	3.6	5.1	3.9	5.6	4.1	6.1	4.2	6.4	4.1	6.5	4.3
37	3.2	2.4	3.7	2.8	4.2	3.4	4.6	3.6	5.1	3.9	5.6	4.1	6.1	4.2	6.3	4.1	6.4	4.2
40	3.2	2.4	3.7	2.8	4.2	3.4	4.6	3.6	5.1	3.9	5.6	4.1	5.9	4.1	6.2	4.0	6.3	4.2
43	3.2	2.4	3.7	2.8	4.2	3.4	4.6	3.6	5.1	3.9	5.6	4.1	5.8	4.0	6.0	3.9	6.1	4.1
46	3.2	2.4	3.7	2.8	4.2	3.4	4.6	3.6	5.1	3.9	5.5	4.0	5.6	4.0	5.8	3.9	5.9	4.1

■ Model: AUXS024GLEH

Outdoor temperature	Indoor temperature																	
	18°CDB/14°CWB		20°CDB/15°CWB		23°CDB/16°CWB		24°CDB/17°CWB		26°CDB/18°CWB		27°CDB/19°CWB		28°CDB/20°CWB		30°CDB/22°CWB		32°CDB/23°CWB	
°CDB	TC	SHC	TC	SHC	TC	SHC	TC	SHC	TC	SHC	TC	SHC	TC	SHC	TC	SHC	TC	SHC
10	4.1	2.9	4.7	3.4	5.3	4.1	5.9	4.3	6.5	4.8	7.1	4.9	7.7	5.1	8.9	5.3	9.5	5.7
15	4.1	2.9	4.7	3.4	5.3	4.1	5.9	4.3	6.5	4.8	7.1	4.9	7.7	5.1	8.9	5.3	9.5	5.7
21	4.1	2.9	4.7	3.4	5.3	4.1	5.9	4.3	6.5	4.8	7.1	4.9	7.7	5.1	8.9	5.3	9.3	5.6
23	4.1	2.9	4.7	3.4	5.3	4.1	5.9	4.3	6.5	4.8	7.1	4.9	7.7	5.1	8.9	5.3	9.1	5.5
25	4.1	2.9	4.7	3.4	5.3	4.1	5.9	4.3	6.5	4.8	7.1	4.9	7.7	5.1	8.8	5.3	9.0	5.5
27	4.1	2.9	4.7	3.4	5.3	4.1	5.9	4.3	6.5	4.8	7.1	4.9	7.7	5.1	8.7	5.2	8.8	5.4
30	4.1	2.9	4.7	3.4	5.3	4.1	5.9	4.3	6.5	4.8	7.1	4.9	7.7	5.1	8.5	5.1	8.6	5.3
33	4.1	2.9	4.7	3.4	5.3	4.1	5.9	4.3	6.5	4.8	7.1	4.9	7.7	5.1	8.3	5.1	8.4	5.3
35	4.1	2.9	4.7	3.4	5.3	4.1	5.9	4.3	6.5	4.8	7.1	4.9	7.7	5.1	8.1	5.0	8.3	5.2
37	4.1	2.9	4.7	3.4	5.3	4.1	5.9	4.3	6.5	4.8	7.1	4.9	7.7	5.1	8.0	4.9	8.2	5.1
40	4.1	2.9	4.7	3.4	5.3	4.1	5.9	4.3	6.5	4.8	7.1	4.9	7.5	5.0	7.8	4.9	8.0	5.1
43	4.1	2.9	4.7	3.4	5.3	4.1	5.9	4.3	6.5	4.8	7.1	4.9	7.3	4.9	7.6	4.8	7.8	5.0
46	4.1	2.9	4.7	3.4	5.3	4.1	5.9	4.3	6.5	4.8	7.0	4.9	7.1	4.8	7.4	4.7	7.5	4.9

2-5. One way flow cassette type

■ Model: AUXV004GLEH

Outdoor temperature	Indoor temperature																	
	18°CDB/14°CWB		20°CDB/15°CWB		23°CDB/16°CWB		24°CDB/17°CWB		26°CDB/18°CWB		27°CDB/19°CWB		28°CDB/20°CWB		30°CDB/22°CWB		32°CDB/23°CWB	
°CDB	TC	SHC	TC	SHC	TC	SHC	TC	SHC	TC	SHC	TC	SHC	TC	SHC	TC	SHC	TC	SHC
10	0.6	0.5	0.7	0.6	0.8	0.7	0.9	0.8	1.0	0.8	1.1	0.9	1.2	0.9	1.4	0.9	1.5	1.0
15	0.6	0.5	0.7	0.6	0.8	0.7	0.9	0.8	1.0	0.8	1.1	0.9	1.2	0.9	1.4	0.9	1.5	1.0
21	0.6	0.5	0.7	0.6	0.8	0.7	0.9	0.8	1.0	0.8	1.1	0.9	1.2	0.9	1.4	0.9	1.4	1.0
23	0.6	0.5	0.7	0.6	0.8	0.7	0.9	0.8	1.0	0.8	1.1	0.9	1.2	0.9	1.4	0.9	1.4	1.0
25	0.6	0.5	0.7	0.6	0.8	0.7	0.9	0.8	1.0	0.8	1.1	0.9	1.2	0.9	1.4	0.9	1.4	0.9
27	0.6	0.5	0.7	0.6	0.8	0.7	0.9	0.8	1.0	0.8	1.1	0.9	1.2	0.9	1.3	0.9	1.4	0.9
30	0.6	0.5	0.7	0.6	0.8	0.7	0.9	0.8	1.0	0.8	1.1	0.9	1.2	0.9	1.3	0.9	1.3	0.9
33	0.6	0.5	0.7	0.6	0.8	0.7	0.9	0.8	1.0	0.8	1.1	0.9	1.2	0.9	1.3	0.9	1.3	0.9
35	0.6	0.5	0.7	0.6	0.8	0.7	0.9	0.8	1.0	0.8	1.1	0.9	1.2	0.9	1.3	0.9	1.3	0.9
37	0.6	0.5	0.7	0.6	0.8	0.7	0.9	0.8	1.0	0.8	1.1	0.9	1.2	0.9	1.2	0.9	1.3	0.9
40	0.6	0.5	0.7	0.6	0.8	0.7	0.9	0.8	1.0	0.8	1.1	0.9	1.2	0.9	1.2	0.8	1.2	0.9
43	0.6	0.5	0.7	0.6	0.8	0.7	0.9	0.8	1.0	0.8	1.1	0.9	1.1	0.8	1.2	0.8	1.2	0.9
46	0.6	0.5	0.7	0.6	0.8	0.7	0.9	0.8	1.0	0.8	1.1	0.8	1.1	0.8	1.1	0.8	1.2	0.9

■ Model: AUXV007GLEH

Outdoor temperature	Indoor temperature																	
	18°CDB/14°CWB		20°CDB/15°CWB		23°CDB/16°CWB		24°CDB/17°CWB		26°CDB/18°CWB		27°CDB/19°CWB		28°CDB/20°CWB		30°CDB/22°CWB		32°CDB/23°CWB	
°CDB	TC	SHC	TC	SHC	TC	SHC	TC	SHC	TC	SHC	TC	SHC	TC	SHC	TC	SHC	TC	SHC
10	1.3	1.0	1.4	1.2	1.6	1.4	1.8	1.5	2.0	1.6	2.2	1.7	2.4	1.7	2.8	1.8	2.9	1.9
15	1.3	1.0	1.4	1.2	1.6	1.4	1.8	1.5	2.0	1.6	2.2	1.7	2.4	1.7	2.8	1.8	2.9	1.9
21	1.3	1.0	1.4	1.2	1.6	1.4	1.8	1.5	2.0	1.6	2.2	1.7	2.4	1.7	2.8	1.8	2.9	1.9
23	1.3	1.0	1.4	1.2	1.6	1.4	1.8	1.5	2.0	1.6	2.2	1.7	2.4	1.7	2.8	1.8	2.8	1.9
25	1.3	1.0	1.4	1.2	1.6	1.4	1.8	1.5	2.0	1.6	2.2	1.7	2.4	1.7	2.7	1.8	2.8	1.9
27	1.3	1.0	1.4	1.2	1.6	1.4	1.8	1.5	2.0	1.6	2.2	1.7	2.4	1.7	2.7	1.8	2.7	1.9
30	1.3	1.0	1.4	1.2	1.6	1.4	1.8	1.5	2.0	1.6	2.2	1.7	2.4	1.7	2.6	1.7	2.7	1.8
33	1.3	1.0	1.4	1.2	1.6	1.4	1.8	1.5	2.0	1.6	2.2	1.7	2.4	1.7	2.6	1.7	2.6	1.8
35	1.3	1.0	1.4	1.2	1.6	1.4	1.8	1.5	2.0	1.6	2.2	1.7	2.4	1.7	2.5	1.7	2.6	1.8
37	1.3	1.0	1.4	1.2	1.6	1.4	1.8	1.5	2.0	1.6	2.2	1.7	2.4	1.7	2.5	1.7	2.5	1.8
40	1.3	1.0	1.4	1.2	1.6	1.4	1.8	1.5	2.0	1.6	2.2	1.7	2.3	1.7	2.4	1.7	2.5	1.8
43	1.3	1.0	1.4	1.2	1.6	1.4	1.8	1.5	2.0	1.6	2.2	1.7	2.3	1.7	2.4	1.6	2.4	1.7
46	1.3	1.0	1.4	1.2	1.6	1.4	1.8	1.5	2.0	1.6	2.2	1.7	2.2	1.7	2.3	1.6	2.3	1.7

■ Model: AUXV009GLEH

Outdoor temperature	Indoor temperature																	
	18°CDB/14°CWB		20°CDB/15°CWB		23°CDB/16°CWB		24°CDB/17°CWB		26°CDB/18°CWB		27°CDB/19°CWB		28°CDB/20°CWB		30°CDB/22°CWB		32°CDB/23°CWB	
°CDB	TC	SHC	TC	SHC	TC	SHC	TC	SHC	TC	SHC	TC	SHC	TC	SHC	TC	SHC	TC	SHC
10	1.6	1.2	1.8	1.5	2.1	1.8	2.3	1.9	2.6	2.1	2.8	2.1	3.0	2.2	3.5	2.3	3.8	2.5
15	1.6	1.2	1.8	1.5	2.1	1.8	2.3	1.9	2.6	2.1	2.8	2.1	3.0	2.2	3.5	2.3	3.8	2.5
21	1.6	1.2	1.8	1.5	2.1	1.8	2.3	1.9	2.6	2.1	2.8	2.1	3.0	2.2	3.5	2.3	3.7	2.4
23	1.6	1.2	1.8	1.5	2.1	1.8	2.3	1.9	2.6	2.1	2.8	2.1	3.0	2.2	3.5	2.3	3.6	2.4
25	1.6	1.2	1.8	1.5	2.1	1.8	2.3	1.9	2.6	2.1	2.8	2.1	3.0	2.2	3.5	2.3	3.5	2.4
27	1.6	1.2	1.8	1.5	2.1	1.8	2.3	1.9	2.6	2.1	2.8	2.1	3.0	2.2	3.4	2.2	3.5	2.4
30	1.6	1.2	1.8	1.5	2.1	1.8	2.3	1.9	2.6	2.1	2.8	2.1	3.0	2.2	3.4	2.2	3.4	2.3
33	1.6	1.2	1.8	1.5	2.1	1.8	2.3	1.9	2.6	2.1	2.8	2.1	3.0	2.2	3.3	2.2	3.3	2.3
35	1.6	1.2	1.8	1.5	2.1	1.8	2.3	1.9	2.6	2.1	2.8	2.1	3.0	2.2	3.2	2.2	3.3	2.3
37	1.6	1.2	1.8	1.5	2.1	1.8	2.3	1.9	2.6	2.1	2.8	2.1	3.0	2.2	3.2	2.1	3.2	2.3
40	1.6	1.2	1.8	1.5	2.1	1.8	2.3	1.9	2.6	2.1	2.8	2.1	3.0	2.2	3.1	2.1	3.1	2.2
43	1.6	1.2	1.8	1.5	2.1	1.8	2.3	1.9	2.6	2.1	2.8	2.1	2.9	2.1	3.0	2.1	3.1	2.2
46	1.6	1.2	1.8	1.5	2.1	1.8	2.3	1.9	2.6	2.1	2.8	2.1	2.8	2.1	2.9	2.1	3.0	2.2

■ Model: AUXV012GLEH

Outdoor temperature	Indoor temperature																	
	18°CDB/14°CWB		20°CDB/15°CWB		23°CDB/16°CWB		24°CDB/17°CWB		26°CDB/18°CWB		27°CDB/19°CWB		28°CDB/20°CWB		30°CDB/22°CWB		32°CDB/23°CWB	
°CDB	TC	SHC	TC	SHC	TC	SHC	TC	SHC	TC	SHC	TC	SHC	TC	SHC	TC	SHC	TC	SHC
10	2.1	1.5	2.4	1.8	2.7	2.2	3.0	2.3	3.3	2.5	3.6	2.6	3.9	2.7	4.5	2.8	4.8	3.0
15	2.1	1.5	2.4	1.8	2.7	2.2	3.0	2.3	3.3	2.5	3.6	2.6	3.9	2.7	4.5	2.8	4.8	3.0
21	2.1	1.5	2.4	1.8	2.7	2.2	3.0	2.3	3.3	2.5	3.6	2.6	3.9	2.7	4.5	2.8	4.7	2.9
23	2.1	1.5	2.4	1.8	2.7	2.2	3.0	2.3	3.3	2.5	3.6	2.6	3.9	2.7	4.5	2.8	4.6	2.9
25	2.1	1.5	2.4	1.8	2.7	2.2	3.0	2.3	3.3	2.5	3.6	2.6	3.9	2.7	4.5	2.8	4.6	2.9
27	2.1	1.5	2.4	1.8	2.7	2.2	3.0	2.3	3.3	2.5	3.6	2.6	3.9	2.7	4.4	2.7	4.5	2.9
30	2.1	1.5	2.4	1.8	2.7	2.2	3.0	2.3	3.3	2.5	3.6	2.6	3.9	2.7	4.3	2.7	4.4	2.8
33	2.1	1.5	2.4	1.8	2.7	2.2	3.0	2.3	3.3	2.5	3.6	2.6	3.9	2.7	4.2	2.7	4.3	2.8
35	2.1	1.5	2.4	1.8	2.7	2.2	3.0	2.3	3.3	2.5	3.6	2.6	3.9	2.7	4.1	2.6	4.2	2.8
37	2.1	1.5	2.4	1.8	2.7	2.2	3.0	2.3	3.3	2.5	3.6	2.6	3.9	2.7	4.1	2.6	4.1	2.7
40	2.1	1.5	2.4	1.8	2.7	2.2	3.0	2.3	3.3	2.5	3.6	2.6	3.8	2.6	4.0	2.6	4.0	2.7
43	2.1	1.5	2.4	1.8	2.7	2.2	3.0	2.3	3.3	2.5	3.6	2.6	3.7	2.6	3.9	2.5	3.9	2.7
46	2.1	1.5	2.4	1.8	2.7	2.2	3.0	2.3	3.3	2.5	3.5	2.6	3.6	2.5	3.8	2.5	3.8	2.6

■ Model: AUXV014GLEH

Outdoor temperature	Indoor temperature																	
	18°CDB/14°CWB		20°CDB/15°CWB		23°CDB/16°CWB		24°CDB/17°CWB		26°CDB/18°CWB		27°CDB/19°CWB		28°CDB/20°CWB		30°CDB/22°CWB		32°CDB/23°CWB	
°CDB	TC	SHC	TC	SHC	TC	SHC	TC	SHC	TC	SHC	TC	SHC	TC	SHC	TC	SHC	TC	SHC
10	2.6	1.9	3.0	2.2	3.3	2.7	3.7	2.8	4.1	3.1	4.5	3.2	4.9	3.3	5.6	3.4	6.0	3.7
15	2.6	1.9	3.0	2.2	3.3	2.7	3.7	2.8	4.1	3.1	4.5	3.2	4.9	3.3	5.6	3.4	6.0	3.7
21	2.6	1.9	3.0	2.2	3.3	2.7	3.7	2.8	4.1	3.1	4.5	3.2	4.9	3.3	5.6	3.4	5.9	3.6
23	2.6	1.9	3.0	2.2	3.3	2.7	3.7	2.8	4.1	3.1	4.5	3.2	4.9	3.3	5.6	3.4	5.8	3.6
25	2.6	1.9	3.0	2.2	3.3	2.7	3.7	2.8	4.1	3.1	4.5	3.2	4.9	3.3	5.6	3.4	5.7	3.5
27	2.6	1.9	3.0	2.2	3.3	2.7	3.7	2.8	4.1	3.1	4.5	3.2	4.9	3.3	5.5	3.3	5.6	3.5
30	2.6	1.9	3.0	2.2	3.3	2.7	3.7	2.8	4.1	3.1	4.5	3.2	4.9	3.3	5.4	3.3	5.5	3.4
33	2.6	1.9	3.0	2.2	3.3	2.7	3.7	2.8	4.1	3.1	4.5	3.2	4.9	3.3	5.3	3.3	5.4	3.4
35	2.6	1.9	3.0	2.2	3.3	2.7	3.7	2.8	4.1	3.1	4.5	3.2	4.9	3.3	5.2	3.2	5.3	3.3
37	2.6	1.9	3.0	2.2	3.3	2.7	3.7	2.8	4.1	3.1	4.5	3.2	4.9	3.3	5.1	3.2	5.2	3.3
40	2.6	1.9	3.0	2.2	3.3	2.7	3.7	2.8	4.1	3.1	4.5	3.2	4.8	3.2	5.0	3.1	5.0	3.3
43	2.6	1.9	3.0	2.2	3.3	2.7	3.7	2.8	4.1	3.1	4.5	3.2	4.6	3.2	4.8	3.1	4.9	3.2
46	2.6	1.9	3.0	2.2	3.3	2.7	3.7	2.8	4.1	3.1	4.4	3.1	4.5	3.1	4.7	3.0	4.8	3.2

■ Model: AUXV018GLEH

Outdoor temperature	Indoor temperature																	
	18°CDB/14°CWB		20°CDB/15°CWB		23°CDB/16°CWB		24°CDB/17°CWB		26°CDB/18°CWB		27°CDB/19°CWB		28°CDB/20°CWB		30°CDB/22°CWB		32°CDB/23°CWB	
°CDB	TC	SHC	TC	SHC	TC	SHC	TC	SHC	TC	SHC	TC	SHC	TC	SHC	TC	SHC	TC	SHC
10	3.2	2.4	3.7	2.8	4.2	3.4	4.6	3.6	5.1	3.9	5.6	4.1	6.1	4.2	7.0	4.3	7.5	4.7
15	3.2	2.4	3.7	2.8	4.2	3.4	4.6	3.6	5.1	3.9	5.6	4.1	6.1	4.2	7.0	4.3	7.5	4.7
21	3.2	2.4	3.7	2.8	4.2	3.4	4.6	3.6	5.1	3.9	5.6	4.1	6.1	4.2	7.0	4.3	7.3	4.6
23	3.2	2.4	3.7	2.8	4.2	3.4	4.6	3.6	5.1	3.9	5.6	4.1	6.1	4.2	7.0	4.3	7.2	4.5
25	3.2	2.4	3.7	2.8	4.2	3.4	4.6	3.6	5.1	3.9	5.6	4.1	6.1	4.2	7.0	4.3	7.1	4.5
27	3.2	2.4	3.7	2.8	4.2	3.4	4.6	3.6	5.1	3.9	5.6	4.1	6.1	4.2	6.8	4.3	7.0	4.5
30	3.2	2.4	3.7	2.8	4.2	3.4	4.6	3.6	5.1	3.9	5.6	4.1	6.1	4.2	6.7	4.2	6.8	4.4
33	3.2	2.4	3.7	2.8	4.2	3.4	4.6	3.6	5.1	3.9	5.6	4.1	6.1	4.2	6.5	4.1	6.7	4.3
35	3.2	2.4	3.7	2.8	4.2	3.4	4.6	3.6	5.1	3.9	5.6	4.1	6.1	4.2	6.4	4.1	6.5	4.3
37	3.2	2.4	3.7	2.8	4.2	3.4	4.6	3.6	5.1	3.9	5.6	4.1	6.1	4.2	6.3	4.1	6.4	4.2
40	3.2	2.4	3.7	2.8	4.2	3.4	4.6	3.6	5.1	3.9	5.6	4.1	5.9	4.1	6.2	4.0	6.3	4.2
43	3.2	2.4	3.7	2.8	4.2	3.4	4.6	3.6	5.1	3.9	5.6	4.1	5.8	4.0	6.0	3.9	6.1	4.1
46	3.2	2.4	3.7	2.8	4.2	3.4	4.6	3.6	5.1	3.9	5.5	4.0	5.6	4.0	5.8	3.9	5.9	4.1

■ Model: AUXV024GLEH

Outdoor temperature	Indoor temperature																	
	18°CDB/14°CWB		20°CDB/15°CWB		23°CDB/16°CWB		24°CDB/17°CWB		26°CDB/18°CWB		27°CDB/19°CWB		28°CDB/20°CWB		30°CDB/22°CWB		32°CDB/23°CWB	
°CDB	TC	SHC	TC	SHC	TC	SHC	TC	SHC	TC	SHC	TC	SHC	TC	SHC	TC	SHC	TC	SHC
10	4.1	3.1	4.7	3.6	5.3	4.5	5.9	4.7	6.5	5.1	7.1	5.3	7.7	5.4	8.9	5.6	9.5	6.0
15	4.1	3.1	4.7	3.6	5.3	4.5	5.9	4.7	6.5	5.1	7.1	5.3	7.7	5.4	8.9	5.6	9.5	6.0
21	4.1	3.1	4.7	3.6	5.3	4.5	5.9	4.7	6.5	5.1	7.1	5.3	7.7	5.4	8.9	5.6	9.3	5.9
23	4.1	3.1	4.7	3.6	5.3	4.5	5.9	4.7	6.5	5.1	7.1	5.3	7.7	5.4	8.9	5.6	9.1	5.9
25	4.1	3.1	4.7	3.6	5.3	4.5	5.9	4.7	6.5	5.1	7.1	5.3	7.7	5.4	8.8	5.6	9.0	5.8
27	4.1	3.1	4.7	3.6	5.3	4.5	5.9	4.7	6.5	5.1	7.1	5.3	7.7	5.4	8.7	5.5	8.8	5.8
30	4.1	3.1	4.7	3.6	5.3	4.5	5.9	4.7	6.5	5.1	7.1	5.3	7.7	5.4	8.5	5.5	8.6	5.7
33	4.1	3.1	4.7	3.6	5.3	4.5	5.9	4.7	6.5	5.1	7.1	5.3	7.7	5.4	8.3	5.4	8.4	5.6
35	4.1	3.1	4.7	3.6	5.3	4.5	5.9	4.7	6.5	5.1	7.1	5.3	7.7	5.4	8.1	5.3	8.3	5.6
37	4.1	3.1	4.7	3.6	5.3	4.5	5.9	4.7	6.5	5.1	7.1	5.3	7.7	5.4	8.0	5.3	8.2	5.5
40	4.1	3.1	4.7	3.6	5.3	4.5	5.9	4.7	6.5	5.1	7.1	5.3	7.5	5.3	7.8	5.2	8.0	5.5
43	4.1	3.1	4.7	3.6	5.3	4.5	5.9	4.7	6.5	5.1	7.1	5.3	7.3	5.3	7.6	5.1	7.8	5.4
46	4.1	3.1	4.7	3.6	5.3	4.5	5.9	4.7	6.5	5.1	7.0	5.2	7.1	5.2	7.4	5.1	7.5	5.3

2-6. Low static pressure duct (Mini duct) type

■ Model: ARXK004GLGH

Outdoor temperature	Indoor temperature																	
	18°CDB/14°CWB		20°CDB/15°CWB		23°CDB/16°CWB		24°CDB/17°CWB		26°CDB/18°CWB		27°CDB/19°CWB		28°CDB/20°CWB		30°CDB/22°CWB		32°CDB/23°CWB	
°CDB	TC	SHC	TC	SHC	TC	SHC	TC	SHC	TC	SHC	TC	SHC	TC	SHC	TC	SHC	TC	SHC
-15	0.6	0.5	0.7	0.6	0.8	0.7	0.9	0.8	1.0	0.9	1.1	0.9	1.2	0.9	1.4	0.9	1.5	1.0
-10	0.6	0.5	0.7	0.6	0.8	0.7	0.9	0.8	1.0	0.9	1.1	0.9	1.2	0.9	1.4	0.9	1.5	1.0
-5	0.6	0.5	0.7	0.6	0.8	0.7	0.9	0.8	1.0	0.9	1.1	0.9	1.2	0.9	1.4	0.9	1.5	1.0
0	0.6	0.5	0.7	0.6	0.8	0.7	0.9	0.8	1.0	0.9	1.1	0.9	1.2	0.9	1.4	0.9	1.5	1.0
5	0.6	0.5	0.7	0.6	0.8	0.7	0.9	0.8	1.0	0.9	1.1	0.9	1.2	0.9	1.4	0.9	1.5	1.0
10	0.6	0.5	0.7	0.6	0.8	0.7	0.9	0.8	1.0	0.9	1.1	0.9	1.2	0.9	1.4	0.9	1.5	1.0
15	0.6	0.5	0.7	0.6	0.8	0.7	0.9	0.8	1.0	0.9	1.1	0.9	1.2	0.9	1.4	0.9	1.5	1.0
21	0.6	0.5	0.7	0.6	0.8	0.7	0.9	0.8	1.0	0.9	1.1	0.9	1.2	0.9	1.4	0.9	1.4	1.0
23	0.6	0.5	0.7	0.6	0.8	0.7	0.9	0.8	1.0	0.9	1.1	0.9	1.2	0.9	1.4	0.9	1.4	1.0
25	0.6	0.5	0.7	0.6	0.8	0.7	0.9	0.8	1.0	0.9	1.1	0.9	1.2	0.9	1.4	0.9	1.4	1.0
27	0.6	0.5	0.7	0.6	0.8	0.7	0.9	0.8	1.0	0.9	1.1	0.9	1.2	0.9	1.3	0.9	1.4	1.0
30	0.6	0.5	0.7	0.6	0.8	0.7	0.9	0.8	1.0	0.9	1.1	0.9	1.2	0.9	1.3	0.9	1.3	0.9
33	0.6	0.5	0.7	0.6	0.8	0.7	0.9	0.8	1.0	0.9	1.1	0.9	1.2	0.9	1.3	0.9	1.3	0.9
35	0.6	0.5	0.7	0.6	0.8	0.7	0.9	0.8	1.0	0.9	1.1	0.9	1.2	0.9	1.3	0.9	1.3	0.9
37	0.6	0.5	0.7	0.6	0.8	0.7	0.9	0.8	1.0	0.9	1.1	0.9	1.2	0.9	1.2	0.9	1.3	0.9
40	0.6	0.5	0.7	0.6	0.8	0.7	0.9	0.8	1.0	0.9	1.1	0.9	1.2	0.9	1.2	0.9	1.2	0.9
43	0.6	0.5	0.7	0.6	0.8	0.7	0.9	0.8	1.0	0.9	1.1	0.9	1.1	0.9	1.2	0.9	1.2	0.9
46	0.6	0.5	0.7	0.6	0.8	0.7	0.9	0.8	1.0	0.9	1.1	0.9	1.1	0.9	1.1	0.8	1.2	0.9

■ Model: ARXK007GLGH

Outdoor temperature	Indoor temperature															
	20°CDB/15°CWB		23°CDB/16°CWB		24°CDB/17°CWB		26°CDB/18°CWB		27°CDB/19°CWB		28°CDB/20°CWB		30°CDB/22°CWB		32°CDB/23°CWB	
°CDB	TC	SHC	TC	SHC	TC	SHC	TC	SHC	TC	SHC	TC	SHC	TC	SHC	TC	SHC
10	1.4	1.1	1.6	1.3	1.8	1.4	2.0	1.5	2.2	1.6	2.4	1.6	2.8	1.7	2.9	1.8
15	1.4	1.1	1.6	1.3	1.8	1.4	2.0	1.5	2.2	1.6	2.4	1.6	2.8	1.7	2.9	1.8
21	1.4	1.1	1.6	1.3	1.8	1.4	2.0	1.5	2.2	1.6	2.4	1.6	2.8	1.7	2.9	1.8
23	1.4	1.1	1.6	1.3	1.8	1.4	2.0	1.5	2.2	1.6	2.4	1.6	2.8	1.7	2.8	1.8
25	1.4	1.1	1.6	1.3	1.8	1.4	2.0	1.5	2.2	1.6	2.4	1.6	2.7	1.7	2.8	1.7
27	1.4	1.1	1.6	1.3	1.8	1.4	2.0	1.5	2.2	1.6	2.4	1.6	2.7	1.7	2.7	1.7
30	1.4	1.1	1.6	1.3	1.8	1.4	2.0	1.5	2.2	1.6	2.4	1.6	2.6	1.6	2.7	1.7
33	1.4	1.1	1.6	1.3	1.8	1.4	2.0	1.5	2.2	1.6	2.4	1.6	2.6	1.6	2.6	1.7
35	1.4	1.1	1.6	1.3	1.8	1.4	2.0	1.5	2.2	1.6	2.4	1.6	2.5	1.6	2.6	1.7
37	1.4	1.1	1.6	1.3	1.8	1.4	2.0	1.5	2.2	1.6	2.4	1.6	2.5	1.6	2.5	1.7
40	1.4	1.1	1.6	1.3	1.8	1.4	2.0	1.5	2.2	1.6	2.3	1.6	2.4	1.6	2.5	1.6
43	1.4	1.1	1.6	1.3	1.8	1.4	2.0	1.5	2.2	1.6	2.3	1.6	2.4	1.5	2.4	1.6
46	1.4	1.1	1.6	1.3	1.8	1.4	2.0	1.5	2.2	1.5	2.2	1.5	2.3	1.5	2.3	1.6

■ Model: ARXK009GLGH

Outdoor temperature	Indoor temperature															
	20°CDB/15°CWB		23°CDB/16°CWB		24°CDB/17°CWB		26°CDB/18°CWB		27°CDB/19°CWB		28°CDB/20°CWB		30°CDB/22°CWB		32°CDB/23°CWB	
°CDB	TC	SHC	TC	SHC	TC	SHC	TC	SHC	TC	SHC	TC	SHC	TC	SHC	TC	SHC
10	1.8	1.4	2.1	1.7	2.3	1.8	2.6	1.9	2.8	2.0	3.0	2.1	3.5	2.1	3.8	2.3
15	1.8	1.4	2.1	1.7	2.3	1.8	2.6	1.9	2.8	2.0	3.0	2.1	3.5	2.1	3.8	2.3
21	1.8	1.4	2.1	1.7	2.3	1.8	2.6	1.9	2.8	2.0	3.0	2.1	3.5	2.1	3.7	2.3
23	1.8	1.4	2.1	1.7	2.3	1.8	2.6	1.9	2.8	2.0	3.0	2.1	3.5	2.1	3.6	2.2
25	1.8	1.4	2.1	1.7	2.3	1.8	2.6	1.9	2.8	2.0	3.0	2.1	3.5	2.1	3.5	2.2
27	1.8	1.4	2.1	1.7	2.3	1.8	2.6	1.9	2.8	2.0	3.0	2.1	3.4	2.1	3.5	2.2
30	1.8	1.4	2.1	1.7	2.3	1.8	2.6	1.9	2.8	2.0	3.0	2.1	3.4	2.1	3.4	2.2
33	1.8	1.4	2.1	1.7	2.3	1.8	2.6	1.9	2.8	2.0	3.0	2.1	3.3	2.1	3.3	2.1
35	1.8	1.4	2.1	1.7	2.3	1.8	2.6	1.9	2.8	2.0	3.0	2.1	3.2	2.0	3.3	2.1
37	1.8	1.4	2.1	1.7	2.3	1.8	2.6	1.9	2.8	2.0	3.0	2.1	3.2	2.0	3.2	2.1
40	1.8	1.4	2.1	1.7	2.3	1.8	2.6	1.9	2.8	2.0	3.0	2.0	3.1	2.0	3.1	2.1
43	1.8	1.4	2.1	1.7	2.3	1.8	2.6	1.9	2.8	2.0	2.9	2.0	3.0	1.9	3.1	2.0
46	1.8	1.4	2.1	1.7	2.3	1.8	2.6	1.9	2.8	2.0	2.8	2.0	2.9	1.9	3.0	2.0

■ Model: ARXK012GLGH

Outdoor temperature	Indoor temperature															
	20°CDB/15°CWB		23°CDB/16°CWB		24°CDB/17°CWB		26°CDB/18°CWB		27°CDB/19°CWB		28°CDB/20°CWB		30°CDB/22°CWB		32°CDB/23°CWB	
°CDB	TC	SHC	TC	SHC	TC	SHC	TC	SHC	TC	SHC	TC	SHC	TC	SHC	TC	SHC
10	2.4	1.8	2.7	2.2	3.0	2.3	3.3	2.5	3.6	2.6	3.9	2.7	4.5	2.8	4.8	3.0
15	2.4	1.8	2.7	2.2	3.0	2.3	3.3	2.5	3.6	2.6	3.9	2.7	4.5	2.8	4.8	3.0
21	2.4	1.8	2.7	2.2	3.0	2.3	3.3	2.5	3.6	2.6	3.9	2.7	4.5	2.8	4.7	2.9
23	2.4	1.8	2.7	2.2	3.0	2.3	3.3	2.5	3.6	2.6	3.9	2.7	4.5	2.8	4.6	2.9
25	2.4	1.8	2.7	2.2	3.0	2.3	3.3	2.5	3.6	2.6	3.9	2.7	4.5	2.8	4.6	2.9
27	2.4	1.8	2.7	2.2	3.0	2.3	3.3	2.5	3.6	2.6	3.9	2.7	4.4	2.7	4.5	2.8
30	2.4	1.8	2.7	2.2	3.0	2.3	3.3	2.5	3.6	2.6	3.9	2.7	4.3	2.7	4.4	2.8
33	2.4	1.8	2.7	2.2	3.0	2.3	3.3	2.5	3.6	2.6	3.9	2.7	4.2	2.6	4.3	2.8
35	2.4	1.8	2.7	2.2	3.0	2.3	3.3	2.5	3.6	2.6	3.9	2.7	4.1	2.6	4.2	2.7
37	2.4	1.8	2.7	2.2	3.0	2.3	3.3	2.5	3.6	2.6	3.9	2.7	4.1	2.6	4.1	2.7
40	2.4	1.8	2.7	2.2	3.0	2.3	3.3	2.5	3.6	2.6	3.8	2.6	4.0	2.6	4.0	2.7
43	2.4	1.8	2.7	2.2	3.0	2.3	3.3	2.5	3.6	2.6	3.7	2.6	3.9	2.5	3.9	2.6
46	2.4	1.8	2.7	2.2	3.0	2.3	3.3	2.5	3.5	2.5	3.6	2.5	3.8	2.5	3.8	2.6

■ Model: ARXK014GLGH

Outdoor temperature	Indoor temperature															
	20°CDB/15°CWB		23°CDB/16°CWB		24°CDB/17°CWB		26°CDB/18°CWB		27°CDB/19°CWB		28°CDB/20°CWB		30°CDB/22°CWB		32°CDB/23°CWB	
°CDB	TC	SHC	TC	SHC	TC	SHC	TC	SHC	TC	SHC	TC	SHC	TC	SHC	TC	SHC
10	3.0	2.2	3.3	2.8	3.7	2.9	4.1	3.2	4.5	3.3	4.9	3.4	5.6	3.5	6.0	3.8
15	3.0	2.2	3.3	2.8	3.7	2.9	4.1	3.2	4.5	3.3	4.9	3.4	5.6	3.5	6.0	3.8
21	3.0	2.2	3.3	2.8	3.7	2.9	4.1	3.2	4.5	3.3	4.9	3.4	5.6	3.5	5.9	3.7
23	3.0	2.2	3.3	2.8	3.7	2.9	4.1	3.2	4.5	3.3	4.9	3.4	5.6	3.5	5.8	3.7
25	3.0	2.2	3.3	2.8	3.7	2.9	4.1	3.2	4.5	3.3	4.9	3.4	5.6	3.5	5.7	3.6
27	3.0	2.2	3.3	2.8	3.7	2.9	4.1	3.2	4.5	3.3	4.9	3.4	5.5	3.4	5.6	3.6
30	3.0	2.2	3.3	2.8	3.7	2.9	4.1	3.2	4.5	3.3	4.9	3.4	5.4	3.4	5.5	3.5
33	3.0	2.2	3.3	2.8	3.7	2.9	4.1	3.2	4.5	3.3	4.9	3.4	5.3	3.3	5.4	3.5
35	3.0	2.2	3.3	2.8	3.7	2.9	4.1	3.2	4.5	3.3	4.9	3.4	5.2	3.3	5.3	3.5
37	3.0	2.2	3.3	2.8	3.7	2.9	4.1	3.2	4.5	3.3	4.9	3.4	5.1	3.3	5.2	3.4
40	3.0	2.2	3.3	2.8	3.7	2.9	4.1	3.2	4.5	3.3	4.8	3.3	5.0	3.2	5.0	3.4
43	3.0	2.2	3.3	2.8	3.7	2.9	4.1	3.2	4.5	3.3	4.6	3.3	4.8	3.2	4.9	3.3
46	3.0	2.2	3.3	2.8	3.7	2.9	4.1	3.2	4.4	3.2	4.5	3.2	4.7	3.1	4.8	3.3

■ Model: ARXK018GLGH

Outdoor temperature	Indoor temperature															
	20°CDB/15°CWB		23°CDB/16°CWB		24°CDB/17°CWB		26°CDB/18°CWB		27°CDB/19°CWB		28°CDB/20°CWB		30°CDB/22°CWB		32°CDB/23°CWB	
°CDB	TC	SHC	TC	SHC	TC	SHC	TC	SHC	TC	SHC	TC	SHC	TC	SHC	TC	SHC
10	3.7	2.8	4.2	3.5	4.6	3.6	5.1	4.0	5.6	4.1	6.1	4.2	7.0	4.4	7.5	4.7
15	3.7	2.8	4.2	3.5	4.6	3.6	5.1	4.0	5.6	4.1	6.1	4.2	7.0	4.4	7.5	4.7
21	3.7	2.8	4.2	3.5	4.6	3.6	5.1	4.0	5.6	4.1	6.1	4.2	7.0	4.4	7.3	4.6
23	3.7	2.8	4.2	3.5	4.6	3.6	5.1	4.0	5.6	4.1	6.1	4.2	7.0	4.4	7.2	4.6
25	3.7	2.8	4.2	3.5	4.6	3.6	5.1	4.0	5.6	4.1	6.1	4.2	7.0	4.4	7.1	4.5
27	3.7	2.8	4.2	3.5	4.6	3.6	5.1	4.0	5.6	4.1	6.1	4.2	6.8	4.3	7.0	4.5
30	3.7	2.8	4.2	3.5	4.6	3.6	5.1	4.0	5.6	4.1	6.1	4.2	6.7	4.3	6.8	4.5
33	3.7	2.8	4.2	3.5	4.6	3.6	5.1	4.0	5.6	4.1	6.1	4.2	6.5	4.2	6.7	4.4
35	3.7	2.8	4.2	3.5	4.6	3.6	5.1	4.0	5.6	4.1	6.1	4.2	6.4	4.2	6.5	4.3
37	3.7	2.8	4.2	3.5	4.6	3.6	5.1	4.0	5.6	4.1	6.1	4.2	6.3	4.1	6.4	4.3
40	3.7	2.8	4.2	3.5	4.6	3.6	5.1	4.0	5.6	4.1	5.9	4.2	6.2	4.1	6.3	4.3
43	3.7	2.8	4.2	3.5	4.6	3.6	5.1	4.0	5.6	4.1	5.8	4.1	6.0	4.0	6.1	4.2
46	3.7	2.8	4.2	3.5	4.6	3.6	5.1	4.0	5.5	4.0	5.6	4.0	5.8	3.9	5.9	4.1

■ Model: ARXK024GLGH

Outdoor temperature	Indoor temperature															
	20°CDB/15°CWB		23°CDB/16°CWB		24°CDB/17°CWB		26°CDB/18°CWB		27°CDB/19°CWB		28°CDB/20°CWB		30°CDB/22°CWB		32°CDB/23°CWB	
°CDB	TC	SHC	TC	SHC	TC	SHC	TC	SHC	TC	SHC	TC	SHC	TC	SHC	TC	SHC
10	4.7	3.5	5.3	4.4	5.9	4.5	6.5	5.0	7.1	5.2	7.7	5.3	8.9	5.5	9.5	5.9
15	4.7	3.5	5.3	4.4	5.9	4.5	6.5	5.0	7.1	5.2	7.7	5.3	8.9	5.5	9.5	5.9
21	4.7	3.5	5.3	4.4	5.9	4.5	6.5	5.0	7.1	5.2	7.7	5.3	8.9	5.5	9.3	5.8
23	4.7	3.5	5.3	4.4	5.9	4.5	6.5	5.0	7.1	5.2	7.7	5.3	8.9	5.5	9.1	5.8
25	4.7	3.5	5.3	4.4	5.9	4.5	6.5	5.0	7.1	5.2	7.7	5.3	8.8	5.5	9.0	5.7
27	4.7	3.5	5.3	4.4	5.9	4.5	6.5	5.0	7.1	5.2	7.7	5.3	8.7	5.4	8.9	5.7
30	4.7	3.5	5.3	4.4	5.9	4.5	6.5	5.0	7.1	5.2	7.7	5.3	8.5	5.3	8.6	5.6
33	4.7	3.5	5.3	4.4	5.9	4.5	6.5	5.0	7.1	5.2	7.7	5.3	8.3	5.3	8.4	5.5
35	4.7	3.5	5.3	4.4	5.9	4.5	6.5	5.0	7.1	5.2	7.7	5.3	8.1	5.2	8.3	5.4
37	4.7	3.5	5.3	4.4	5.9	4.5	6.5	5.0	7.1	5.2	7.7	5.3	8.0	5.2	8.2	5.4
40	4.7	3.5	5.3	4.4	5.9	4.5	6.5	5.0	7.1	5.2	7.5	5.2	7.8	5.1	8.0	5.3
43	4.7	3.5	5.3	4.4	5.9	4.5	6.5	5.0	7.1	5.2	7.3	5.1	7.6	5.0	7.8	5.2
46	4.7	3.5	5.3	4.4	5.9	4.5	6.5	5.0	7.0	5.1	7.1	5.0	7.4	4.9	7.5	5.2

2-7. Low static pressure duct (Slim duct)/Slim concealed floor type

■ Model: ARXD007GLEH

Outdoor temperature	Indoor temperature															
	20°CDB/15°CWB		23°CDB/16°CWB		24°CDB/17°CWB		26°CDB/18°CWB		27°CDB/19°CWB		28°CDB/20°CWB		30°CDB/22°CWB		32°CDB/23°CWB	
°CDB	TC	SHC	TC	SHC	TC	SHC	TC	SHC	TC	SHC	TC	SHC	TC	SHC	TC	SHC
10	1.4	1.2	1.6	1.5	1.8	1.6	2.0	1.8	2.2	1.8	2.4	1.8	2.8	1.9	2.9	2.1
15	1.4	1.2	1.6	1.5	1.8	1.6	2.0	1.8	2.2	1.8	2.4	1.8	2.8	1.9	2.9	2.1
21	1.4	1.2	1.6	1.5	1.8	1.6	2.0	1.8	2.2	1.8	2.4	1.8	2.8	1.9	2.9	2.0
23	1.4	1.2	1.6	1.5	1.8	1.6	2.0	1.8	2.2	1.8	2.4	1.8	2.8	1.9	2.8	2.0
25	1.4	1.2	1.6	1.5	1.8	1.6	2.0	1.8	2.2	1.8	2.4	1.8	2.7	1.9	2.8	2.0
27	1.4	1.2	1.6	1.5	1.8	1.6	2.0	1.8	2.2	1.8	2.4	1.8	2.7	1.9	2.7	2.0
30	1.4	1.2	1.6	1.5	1.8	1.6	2.0	1.8	2.2	1.8	2.4	1.8	2.6	1.9	2.7	2.0
33	1.4	1.2	1.6	1.5	1.8	1.6	2.0	1.8	2.2	1.8	2.4	1.8	2.6	1.8	2.6	1.9
35	1.4	1.2	1.6	1.5	1.8	1.6	2.0	1.8	2.2	1.8	2.4	1.8	2.5	1.8	2.6	1.9
37	1.4	1.2	1.6	1.5	1.8	1.6	2.0	1.8	2.2	1.8	2.4	1.8	2.5	1.8	2.5	1.9
40	1.4	1.2	1.6	1.5	1.8	1.6	2.0	1.8	2.2	1.8	2.3	1.8	2.4	1.8	2.5	1.9
43	1.4	1.2	1.6	1.5	1.8	1.6	2.0	1.8	2.2	1.8	2.3	1.8	2.4	1.8	2.4	1.9
46	1.4	1.2	1.6	1.5	1.8	1.6	2.0	1.8	2.2	1.8	2.2	1.8	2.3	1.7	2.3	1.8

■ Model: ARXD009GLEH

Outdoor temperature	Indoor temperature															
	20°CDB/15°CWB		23°CDB/16°CWB		24°CDB/17°CWB		26°CDB/18°CWB		27°CDB/19°CWB		28°CDB/20°CWB		30°CDB/22°CWB		32°CDB/23°CWB	
°CDB	TC	SHC	TC	SHC	TC	SHC	TC	SHC	TC	SHC	TC	SHC	TC	SHC	TC	SHC
10	1.8	1.5	2.1	1.8	2.3	1.9	2.6	2.1	2.8	2.1	3.0	2.2	3.5	2.3	3.8	2.4
15	1.8	1.5	2.1	1.8	2.3	1.9	2.6	2.1	2.8	2.1	3.0	2.2	3.5	2.3	3.8	2.4
21	1.8	1.5	2.1	1.8	2.3	1.9	2.6	2.1	2.8	2.1	3.0	2.2	3.5	2.3	3.7	2.4
23	1.8	1.5	2.1	1.8	2.3	1.9	2.6	2.1	2.8	2.1	3.0	2.2	3.5	2.3	3.6	2.4
25	1.8	1.5	2.1	1.8	2.3	1.9	2.6	2.1	2.8	2.1	3.0	2.2	3.5	2.3	3.5	2.4
27	1.8	1.5	2.1	1.8	2.3	1.9	2.6	2.1	2.8	2.1	3.0	2.2	3.4	2.2	3.5	2.3
30	1.8	1.5	2.1	1.8	2.3	1.9	2.6	2.1	2.8	2.1	3.0	2.2	3.4	2.2	3.4	2.3
33	1.8	1.5	2.1	1.8	2.3	1.9	2.6	2.1	2.8	2.1	3.0	2.2	3.3	2.2	3.3	2.3
35	1.8	1.5	2.1	1.8	2.3	1.9	2.6	2.1	2.8	2.1	3.0	2.2	3.2	2.2	3.3	2.3
37	1.8	1.5	2.1	1.8	2.3	1.9	2.6	2.1	2.8	2.1	3.0	2.2	3.2	2.1	3.2	2.2
40	1.8	1.5	2.1	1.8	2.3	1.9	2.6	2.1	2.8	2.1	3.0	2.2	3.1	2.1	3.1	2.2
43	1.8	1.5	2.1	1.8	2.3	1.9	2.6	2.1	2.8	2.1	2.9	2.1	3.0	2.1	3.1	2.2
46	1.8	1.5	2.1	1.8	2.3	1.9	2.6	2.1	2.8	2.1	2.8	2.1	2.9	2.1	3.0	2.2

■ Model: ARXD012GLEH

Outdoor temperature	Indoor temperature															
	20°CDB/15°CWB		23°CDB/16°CWB		24°CDB/17°CWB		26°CDB/18°CWB		27°CDB/19°CWB		28°CDB/20°CWB		30°CDB/22°CWB		32°CDB/23°CWB	
°CDB	TC	SHC	TC	SHC	TC	SHC	TC	SHC	TC	SHC	TC	SHC	TC	SHC	TC	SHC
10	2.4	1.8	2.7	2.3	3.0	2.4	3.3	2.6	3.6	2.7	3.9	2.7	4.5	2.8	4.8	3.1
15	2.4	1.8	2.7	2.3	3.0	2.4	3.3	2.6	3.6	2.7	3.9	2.7	4.5	2.8	4.8	3.1
21	2.4	1.8	2.7	2.3	3.0	2.4	3.3	2.6	3.6	2.7	3.9	2.7	4.5	2.8	4.7	3.0
23	2.4	1.8	2.7	2.3	3.0	2.4	3.3	2.6	3.6	2.7	3.9	2.7	4.5	2.8	4.6	3.0
25	2.4	1.8	2.7	2.3	3.0	2.4	3.3	2.6	3.6	2.7	3.9	2.7	4.5	2.8	4.6	3.0
27	2.4	1.8	2.7	2.3	3.0	2.4	3.3	2.6	3.6	2.7	3.9	2.7	4.4	2.8	4.5	2.9
30	2.4	1.8	2.7	2.3	3.0	2.4	3.3	2.6	3.6	2.7	3.9	2.7	4.3	2.8	4.4	2.9
33	2.4	1.8	2.7	2.3	3.0	2.4	3.3	2.6	3.6	2.7	3.9	2.7	4.2	2.7	4.3	2.9
35	2.4	1.8	2.7	2.3	3.0	2.4	3.3	2.6	3.6	2.7	3.9	2.7	4.1	2.7	4.2	2.8
37	2.4	1.8	2.7	2.3	3.0	2.4	3.3	2.6	3.6	2.7	3.9	2.7	4.1	2.7	4.1	2.8
40	2.4	1.8	2.7	2.3	3.0	2.4	3.3	2.6	3.6	2.7	3.8	2.7	4.0	2.6	4.0	2.8
43	2.4	1.8	2.7	2.3	3.0	2.4	3.3	2.6	3.6	2.7	3.7	2.7	3.9	2.6	3.9	2.7
46	2.4	1.8	2.7	2.3	3.0	2.4	3.3	2.6	3.5	2.7	3.6	2.6	3.8	2.6	3.8	2.7

■ Model: ARXD014GLEH

Outdoor temperature	Indoor temperature															
	20°CDB/15°CWB		23°CDB/16°CWB		24°CDB/17°CWB		26°CDB/18°CWB		27°CDB/19°CWB		28°CDB/20°CWB		30°CDB/22°CWB		32°CDB/23°CWB	
°CDB	TC	SHC	TC	SHC	TC	SHC	TC	SHC	TC	SHC	TC	SHC	TC	SHC	TC	SHC
10	3.0	2.4	3.3	2.9	3.7	3.0	4.1	3.4	4.5	3.4	4.9	3.5	5.6	3.6	6.0	3.9
15	3.0	2.4	3.3	2.9	3.7	3.0	4.1	3.4	4.5	3.4	4.9	3.5	5.6	3.6	6.0	3.9
21	3.0	2.4	3.3	2.9	3.7	3.0	4.1	3.4	4.5	3.4	4.9	3.5	5.6	3.6	5.9	3.9
23	3.0	2.4	3.3	2.9	3.7	3.0	4.1	3.4	4.5	3.4	4.9	3.5	5.6	3.6	5.8	3.8
25	3.0	2.4	3.3	2.9	3.7	3.0	4.1	3.4	4.5	3.4	4.9	3.5	5.6	3.6	5.7	3.8
27	3.0	2.4	3.3	2.9	3.7	3.0	4.1	3.4	4.5	3.4	4.9	3.5	5.5	3.6	5.6	3.8
30	3.0	2.4	3.3	2.9	3.7	3.0	4.1	3.4	4.5	3.4	4.9	3.5	5.4	3.5	5.5	3.7
33	3.0	2.4	3.3	2.9	3.7	3.0	4.1	3.4	4.5	3.4	4.9	3.5	5.3	3.5	5.4	3.7
35	3.0	2.4	3.3	2.9	3.7	3.0	4.1	3.4	4.5	3.4	4.9	3.5	5.2	3.5	5.3	3.6
37	3.0	2.4	3.3	2.9	3.7	3.0	4.1	3.4	4.5	3.4	4.9	3.5	5.1	3.4	5.2	3.6
40	3.0	2.4	3.3	2.9	3.7	3.0	4.1	3.4	4.5	3.4	4.8	3.5	5.0	3.4	5.0	3.6
43	3.0	2.4	3.3	2.9	3.7	3.0	4.1	3.4	4.5	3.4	4.6	3.4	4.8	3.4	4.9	3.5
46	3.0	2.4	3.3	2.9	3.7	3.0	4.1	3.4	4.4	3.4	4.5	3.4	4.7	3.3	4.8	3.5

■ Model: ARXD018GLEH

Outdoor temperature	Indoor temperature															
	20°CDB/15°CWB		23°CDB/16°CWB		24°CDB/17°CWB		26°CDB/18°CWB		27°CDB/19°CWB		28°CDB/20°CWB		30°CDB/22°CWB		32°CDB/23°CWB	
°CDB	TC	SHC	TC	SHC	TC	SHC	TC	SHC	TC	SHC	TC	SHC	TC	SHC	TC	SHC
10	3.7	2.9	4.2	3.5	4.6	3.7	5.1	4.1	5.6	4.2	6.1	4.3	7.0	4.4	7.5	4.8
15	3.7	2.9	4.2	3.5	4.6	3.7	5.1	4.1	5.6	4.2	6.1	4.3	7.0	4.4	7.5	4.8
21	3.7	2.9	4.2	3.5	4.6	3.7	5.1	4.1	5.6	4.2	6.1	4.3	7.0	4.4	7.3	4.7
23	3.7	2.9	4.2	3.5	4.6	3.7	5.1	4.1	5.6	4.2	6.1	4.3	7.0	4.4	7.2	4.7
25	3.7	2.9	4.2	3.5	4.6	3.7	5.1	4.1	5.6	4.2	6.1	4.3	7.0	4.4	7.1	4.6
27	3.7	2.9	4.2	3.5	4.6	3.7	5.1	4.1	5.6	4.2	6.1	4.3	6.8	4.4	7.0	4.6
30	3.7	2.9	4.2	3.5	4.6	3.7	5.1	4.1	5.6	4.2	6.1	4.3	6.7	4.3	6.8	4.5
33	3.7	2.9	4.2	3.5	4.6	3.7	5.1	4.1	5.6	4.2	6.1	4.3	6.5	4.3	6.7	4.5
35	3.7	2.9	4.2	3.5	4.6	3.7	5.1	4.1	5.6	4.2	6.1	4.3	6.4	4.2	6.5	4.4
37	3.7	2.9	4.2	3.5	4.6	3.7	5.1	4.1	5.6	4.2	6.1	4.3	6.3	4.2	6.4	4.4
40	3.7	2.9	4.2	3.5	4.6	3.7	5.1	4.1	5.6	4.2	5.9	4.2	6.2	4.1	6.3	4.3
43	3.7	2.9	4.2	3.5	4.6	3.7	5.1	4.1	5.6	4.2	5.8	4.2	6.0	4.1	6.1	4.3
46	3.7	2.9	4.2	3.5	4.6	3.7	5.1	4.1	5.5	4.2	5.6	4.1	5.8	4.0	5.9	4.2

■ Model: ARXD024GLEH

Outdoor temperature	Indoor temperature															
	20°CDB/15°CWB		23°CDB/16°CWB		24°CDB/17°CWB		26°CDB/18°CWB		27°CDB/19°CWB		28°CDB/20°CWB		30°CDB/22°CWB		32°CDB/23°CWB	
°CDB	TC	SHC	TC	SHC	TC	SHC	TC	SHC	TC	SHC	TC	SHC	TC	SHC	TC	SHC
10	4.7	3.9	5.3	4.9	5.9	5.0	6.5	5.6	7.1	5.7	7.7	5.8	8.9	6.0	9.5	6.5
15	4.7	3.9	5.3	4.9	5.9	5.0	6.5	5.6	7.1	5.7	7.7	5.8	8.9	6.0	9.5	6.5
21	4.7	3.9	5.3	4.9	5.9	5.0	6.5	5.6	7.1	5.7	7.7	5.8	8.9	6.0	9.3	6.4
23	4.7	3.9	5.3	4.9	5.9	5.0	6.5	5.6	7.1	5.7	7.7	5.8	8.9	6.0	9.1	6.4
25	4.7	3.9	5.3	4.9	5.9	5.0	6.5	5.6	7.1	5.7	7.7	5.8	8.8	6.0	9.0	6.3
27	4.7	3.9	5.3	4.9	5.9	5.0	6.5	5.6	7.1	5.7	7.7	5.8	8.7	5.9	8.8	6.3
30	4.7	3.9	5.3	4.9	5.9	5.0	6.5	5.6	7.1	5.7	7.7	5.8	8.5	5.9	8.6	6.2
33	4.7	3.9	5.3	4.9	5.9	5.0	6.5	5.6	7.1	5.7	7.7	5.8	8.3	5.8	8.4	6.1
35	4.7	3.9	5.3	4.9	5.9	5.0	6.5	5.6	7.1	5.7	7.7	5.8	8.1	5.8	8.3	6.1
37	4.7	3.9	5.3	4.9	5.9	5.0	6.5	5.6	7.1	5.7	7.7	5.8	8.0	5.7	8.2	6.0
40	4.7	3.9	5.3	4.9	5.9	5.0	6.5	5.6	7.1	5.7	7.5	5.8	7.8	5.7	8.0	6.0
43	4.7	3.9	5.3	4.9	5.9	5.0	6.5	5.6	7.1	5.7	7.3	5.7	7.6	5.6	7.8	5.9
46	4.7	3.9	5.3	4.9	5.9	5.0	6.5	5.6	7.0	5.7	7.1	5.6	7.4	5.5	7.5	5.8

2-8. Low static pressure duct (High efficiency) type

■ Model: ARXP018GLFH

Outdoor temperature	Indoor temperature																	
	18°CDB/14°CWB		20°CDB/15°CWB		23°CDB/16°CWB		24°CDB/17°CWB		26°CDB/18°CWB		27°CDB/19°CWB		28°CDB/20°CWB		30°CDB/22°CWB		32°CDB/23°CWB	
°CDB	TC	SHC	TC	SHC	TC	SHC	TC	SHC	TC	SHC	TC	SHC	TC	SHC	TC	SHC	TC	SHC
-15	3.2	2.4	3.7	2.8	4.2	3.4	4.6	3.6	5.1	4.0	5.6	4.1	6.1	4.2	7.0	4.4	7.5	4.7
-10	3.2	2.4	3.7	2.8	4.2	3.4	4.6	3.6	5.1	4.0	5.6	4.1	6.1	4.2	7.0	4.4	7.5	4.7
-5	3.2	2.4	3.7	2.8	4.2	3.4	4.6	3.6	5.1	4.0	5.6	4.1	6.1	4.2	7.0	4.4	7.5	4.7
0	3.2	2.4	3.7	2.8	4.2	3.4	4.6	3.6	5.1	4.0	5.6	4.1	6.1	4.2	7.0	4.4	7.5	4.7
5	3.2	2.4	3.7	2.8	4.2	3.4	4.6	3.6	5.1	4.0	5.6	4.1	6.1	4.2	7.0	4.4	7.5	4.7
10	3.2	2.4	3.7	2.8	4.2	3.4	4.6	3.6	5.1	4.0	5.6	4.1	6.1	4.2	7.0	4.4	7.5	4.7
15	3.2	2.4	3.7	2.8	4.2	3.4	4.6	3.6	5.1	4.0	5.6	4.1	6.1	4.2	7.0	4.4	7.5	4.7
21	3.2	2.4	3.7	2.8	4.2	3.4	4.6	3.6	5.1	4.0	5.6	4.1	6.1	4.2	7.0	4.4	7.3	4.6
23	3.2	2.4	3.7	2.8	4.2	3.4	4.6	3.6	5.1	4.0	5.6	4.1	6.1	4.2	7.0	4.4	7.2	4.5
25	3.2	2.4	3.7	2.8	4.2	3.4	4.6	3.6	5.1	4.0	5.6	4.1	6.1	4.2	7.0	4.3	7.1	4.5
27	3.2	2.4	3.7	2.8	4.2	3.4	4.6	3.6	5.1	4.0	5.6	4.1	6.1	4.2	6.8	4.3	7.0	4.5
30	3.2	2.4	3.7	2.8	4.2	3.4	4.6	3.6	5.1	4.0	5.6	4.1	6.1	4.2	6.7	4.2	6.8	4.4
33	3.2	2.4	3.7	2.8	4.2	3.4	4.6	3.6	5.1	4.0	5.6	4.1	6.1	4.2	6.5	4.2	6.7	4.4
35	3.2	2.4	3.7	2.8	4.2	3.4	4.6	3.6	5.1	4.0	5.6	4.1	6.1	4.2	6.4	4.1	6.5	4.3
37	3.2	2.4	3.7	2.8	4.2	3.4	4.6	3.6	5.1	4.0	5.6	4.1	6.1	4.2	6.3	4.1	6.4	4.3
40	3.2	2.4	3.7	2.8	4.2	3.4	4.6	3.6	5.1	4.0	5.6	4.1	5.9	4.1	6.2	4.0	6.3	4.2
43	3.2	2.4	3.7	2.8	4.2	3.4	4.6	3.6	5.1	4.0	5.6	4.1	5.8	4.0	6.0	4.0	6.1	4.1
46	3.2	2.4	3.7	2.8	4.2	3.4	4.6	3.6	5.1	4.0	5.5	4.0	5.6	4.0	5.8	3.9	5.9	4.1

■ Model: ARXP030GLFH

Outdoor temperature	Indoor temperature																	
	18°CDB/14°CWB		20°CDB/15°CWB		23°CDB/16°CWB		24°CDB/17°CWB		26°CDB/18°CWB		27°CDB/19°CWB		28°CDB/20°CWB		30°CDB/22°CWB		32°CDB/23°CWB	
°CDB	TC	SHC	TC	SHC	TC	SHC	TC	SHC	TC	SHC	TC	SHC	TC	SHC	TC	SHC	TC	SHC
-15	5.2	3.9	5.9	4.5	6.7	5.6	7.5	5.8	8.2	6.5	9.0	6.6	9.7	6.8	11.3	7.1	12.1	7.6
-10	5.2	3.9	5.9	4.5	6.7	5.6	7.5	5.8	8.2	6.5	9.0	6.6	9.7	6.8	11.3	7.1	12.1	7.6
-5	5.2	3.9	5.9	4.5	6.7	5.6	7.5	5.8	8.2	6.5	9.0	6.6	9.7	6.8	11.3	7.1	12.1	7.6
0	5.2	3.9	5.9	4.5	6.7	5.6	7.5	5.8	8.2	6.5	9.0	6.6	9.7	6.8	11.3	7.1	12.1	7.6
5	5.2	3.9	5.9	4.5	6.7	5.6	7.5	5.8	8.2	6.5	9.0	6.6	9.7	6.8	11.3	7.1	12.1	7.6
10	5.2	3.9	5.9	4.5	6.7	5.6	7.5	5.8	8.2	6.5	9.0	6.6	9.7	6.8	11.3	7.1	12.1	7.6
15	5.2	3.9	5.9	4.5	6.7	5.6	7.5	5.8	8.2	6.5	9.0	6.6	9.7	6.8	11.3	7.1	12.1	7.6
21	5.2	3.9	5.9	4.5	6.7	5.6	7.5	5.8	8.2	6.5	9.0	6.6	9.7	6.8	11.3	7.1	11.7	7.5
23	5.2	3.9	5.9	4.5	6.7	5.6	7.5	5.8	8.2	6.5	9.0	6.6	9.7	6.8	11.3	7.1	11.5	7.4
25	5.2	3.9	5.9	4.5	6.7	5.6	7.5	5.8	8.2	6.5	9.0	6.6	9.7	6.8	11.2	7.1	11.4	7.4
27	5.2	3.9	5.9	4.5	6.7	5.6	7.5	5.8	8.2	6.5	9.0	6.6	9.7	6.8	11.0	7.0	11.2	7.3
30	5.2	3.9	5.9	4.5	6.7	5.6	7.5	5.8	8.2	6.5	9.0	6.6	9.7	6.8	10.8	6.9	11.0	7.2
33	5.2	3.9	5.9	4.5	6.7	5.6	7.5	5.8	8.2	6.5	9.0	6.6	9.7	6.8	10.5	6.8	10.7	7.1
35	5.2	3.9	5.9	4.5	6.7	5.6	7.5	5.8	8.2	6.5	9.0	6.6	9.7	6.8	10.3	6.7	10.5	7.0
37	5.2	3.9	5.9	4.5	6.7	5.6	7.5	5.8	8.2	6.5	9.0	6.6	9.7	6.8	10.2	6.7	10.4	7.0
40	5.2	3.9	5.9	4.5	6.7	5.6	7.5	5.8	8.2	6.5	9.0	6.6	9.5	6.7	9.9	6.6	10.1	6.9
43	5.2	3.9	5.9	4.5	6.7	5.6	7.5	5.8	8.2	6.5	9.0	6.6	9.3	6.6	9.6	6.5	9.8	6.8
46	5.2	3.9	5.9	4.5	6.7	5.6	7.5	5.8	8.2	6.5	8.8	6.6	9.0	6.5	9.4	6.4	9.5	6.7

2-9. Medium static pressure duct type

■ Model: ARXA024GLEH

Outdoor temperature	Indoor temperature															
	20°CDB/15°CWB		23°CDB/16°CWB		24°CDB/17°CWB		26°CDB/18°CWB		27°CDB/19°CWB		28°CDB/20°CWB		30°CDB/22°CWB		32°CDB/23°CWB	
°CDB	TC	SHC	TC	SHC	TC	SHC	TC	SHC	TC	SHC	TC	SHC	TC	SHC	TC	SHC
10	4.7	3.8	5.3	4.7	5.9	4.9	6.5	5.4	7.1	5.6	7.7	5.7	8.9	5.9	9.5	6.3
15	4.7	3.8	5.3	4.7	5.9	4.9	6.5	5.4	7.1	5.6	7.7	5.7	8.9	5.9	9.5	6.3
21	4.7	3.8	5.3	4.7	5.9	4.9	6.5	5.4	7.1	5.6	7.7	5.7	8.9	5.9	9.3	6.2
23	4.7	3.8	5.3	4.7	5.9	4.9	6.5	5.4	7.1	5.6	7.7	5.7	8.9	5.9	9.1	6.2
25	4.7	3.8	5.3	4.7	5.9	4.9	6.5	5.4	7.1	5.6	7.7	5.7	8.8	5.8	9.0	6.1
27	4.7	3.8	5.3	4.7	5.9	4.9	6.5	5.4	7.1	5.6	7.7	5.7	8.7	5.8	8.8	6.1
30	4.7	3.8	5.3	4.7	5.9	4.9	6.5	5.4	7.1	5.6	7.7	5.7	8.5	5.7	8.6	6.0
33	4.7	3.8	5.3	4.7	5.9	4.9	6.5	5.4	7.1	5.6	7.7	5.7	8.3	5.7	8.4	5.9
35	4.7	3.8	5.3	4.7	5.9	4.9	6.5	5.4	7.1	5.6	7.7	5.7	8.1	5.6	8.3	5.9
37	4.7	3.8	5.3	4.7	5.9	4.9	6.5	5.4	7.1	5.6	7.7	5.7	8.0	5.5	8.2	5.8
40	4.7	3.8	5.3	4.7	5.9	4.9	6.5	5.4	7.1	5.6	7.5	5.6	7.8	5.5	8.0	5.8
43	4.7	3.8	5.3	4.7	5.9	4.9	6.5	5.4	7.1	5.6	7.3	5.5	7.6	5.4	7.8	5.7
46	4.7	3.8	5.3	4.7	5.9	4.9	6.5	5.4	7.0	5.5	7.1	5.5	7.4	5.3	7.5	5.6

■ Model: ARXA030GLEH

Outdoor temperature	Indoor temperature															
	20°CDB/15°CWB		23°CDB/16°CWB		24°CDB/17°CWB		26°CDB/18°CWB		27°CDB/19°CWB		28°CDB/20°CWB		30°CDB/22°CWB		32°CDB/23°CWB	
°CDB	TC	SHC	TC	SHC	TC	SHC	TC	SHC	TC	SHC	TC	SHC	TC	SHC	TC	SHC
10	5.9	4.6	6.7	5.6	7.5	5.9	8.2	6.5	9.0	6.7	9.7	6.8	11.3	7.1	12.1	7.6
15	5.9	4.6	6.7	5.6	7.5	5.9	8.2	6.5	9.0	6.7	9.7	6.8	11.3	7.1	12.1	7.6
21	5.9	4.6	6.7	5.6	7.5	5.9	8.2	6.5	9.0	6.7	9.7	6.8	11.3	7.1	11.7	7.5
23	5.9	4.6	6.7	5.6	7.5	5.9	8.2	6.5	9.0	6.7	9.7	6.8	11.3	7.1	11.5	7.4
25	5.9	4.6	6.7	5.6	7.5	5.9	8.2	6.5	9.0	6.7	9.7	6.8	11.2	7.1	11.4	7.4
27	5.9	4.6	6.7	5.6	7.5	5.9	8.2	6.5	9.0	6.7	9.7	6.8	11.0	7.0	11.2	7.3
30	5.9	4.6	6.7	5.6	7.5	5.9	8.2	6.5	9.0	6.7	9.7	6.8	10.8	6.9	11.0	7.2
33	5.9	4.6	6.7	5.6	7.5	5.9	8.2	6.5	9.0	6.7	9.7	6.8	10.5	6.8	10.7	7.1
35	5.9	4.6	6.7	5.6	7.5	5.9	8.2	6.5	9.0	6.7	9.7	6.8	10.3	6.7	10.5	7.0
37	5.9	4.6	6.7	5.6	7.5	5.9	8.2	6.5	9.0	6.7	9.7	6.8	10.2	6.7	10.4	7.0
40	5.9	4.6	6.7	5.6	7.5	5.9	8.2	6.5	9.0	6.7	9.5	6.7	9.9	6.6	10.1	6.9
43	5.9	4.6	6.7	5.6	7.5	5.9	8.2	6.5	9.0	6.7	9.3	6.6	9.6	6.5	9.8	6.8
46	5.9	4.6	6.7	5.6	7.5	5.9	8.2	6.5	8.8	6.6	9.0	6.5	9.4	6.4	9.5	6.7

■ Model: ARXA036GLEH

Outdoor temperature	Indoor temperature															
	20°CDB/15°CWB		23°CDB/16°CWB		24°CDB/17°CWB		26°CDB/18°CWB		27°CDB/19°CWB		28°CDB/20°CWB		30°CDB/22°CWB		32°CDB/23°CWB	
°CDB	TC	SHC	TC	SHC	TC	SHC	TC	SHC	TC	SHC	TC	SHC	TC	SHC	TC	SHC
10	7.4	5.7	8.3	7.0	9.3	7.3	10.2	8.0	11.2	8.2	12.1	8.4	14.0	8.7	15.0	9.5
15	7.4	5.7	8.3	7.0	9.3	7.3	10.2	8.0	11.2	8.2	12.1	8.4	14.0	8.7	15.0	9.5
21	7.4	5.7	8.3	7.0	9.3	7.3	10.2	8.0	11.2	8.2	12.1	8.4	14.0	8.7	14.6	9.4
23	7.4	5.7	8.3	7.0	9.3	7.3	10.2	8.0	11.2	8.2	12.1	8.4	14.0	8.7	14.4	9.3
25	7.4	5.7	8.3	7.0	9.3	7.3	10.2	8.0	11.2	8.2	12.1	8.4	13.9	8.7	14.2	9.2
27	7.4	5.7	8.3	7.0	9.3	7.3	10.2	8.0	11.2	8.2	12.1	8.4	13.7	8.6	14.0	9.1
30	7.4	5.7	8.3	7.0	9.3	7.3	10.2	8.0	11.2	8.2	12.1	8.4	13.4	8.4	13.6	9.0
33	7.4	5.7	8.3	7.0	9.3	7.3	10.2	8.0	11.2	8.2	12.1	8.4	13.1	8.3	13.3	8.9
35	7.4	5.7	8.3	7.0	9.3	7.3	10.2	8.0	11.2	8.2	12.1	8.4	12.8	8.2	13.1	8.8
37	7.4	5.7	8.3	7.0	9.3	7.3	10.2	8.0	11.2	8.2	12.1	8.4	12.6	8.2	12.9	8.7
40	7.4	5.7	8.3	7.0	9.3	7.3	10.2	8.0	11.2	8.2	11.8	8.3	12.3	8.0	12.6	8.6
43	7.4	5.7	8.3	7.0	9.3	7.3	10.2	8.0	11.2	8.2	11.5	8.2	12.0	7.9	12.2	8.5
46	7.4	5.7	8.3	7.0	9.3	7.3	10.2	8.0	11.0	8.1	11.2	8.1	11.7	7.8	11.9	8.4

■ Model: ARXA045GLEH

Outdoor temperature	Indoor temperature															
	20°CDB/15°CWB		23°CDB/16°CWB		24°CDB/17°CWB		26°CDB/18°CWB		27°CDB/19°CWB		28°CDB/20°CWB		30°CDB/22°CWB		32°CDB/23°CWB	
°CDB	TC	SHC	TC	SHC	TC	SHC	TC	SHC	TC	SHC	TC	SHC	TC	SHC	TC	SHC
10	8.2	6.4	9.3	7.9	10.4	8.2	11.4	9.0	12.5	9.3	13.5	9.5	15.7	9.9	16.7	10.6
15	8.2	6.4	9.3	7.9	10.4	8.2	11.4	9.0	12.5	9.3	13.5	9.5	15.7	9.9	16.7	10.6
21	8.2	6.4	9.3	7.9	10.4	8.2	11.4	9.0	12.5	9.3	13.5	9.5	15.7	9.9	16.3	10.5
23	8.2	6.4	9.3	7.9	10.4	8.2	11.4	9.0	12.5	9.3	13.5	9.5	15.7	9.9	16.0	10.4
25	8.2	6.4	9.3	7.9	10.4	8.2	11.4	9.0	12.5	9.3	13.5	9.5	15.5	9.8	15.8	10.3
27	8.2	6.4	9.3	7.9	10.4	8.2	11.4	9.0	12.5	9.3	13.5	9.5	15.3	9.7	15.6	10.2
30	8.2	6.4	9.3	7.9	10.4	8.2	11.4	9.0	12.5	9.3	13.5	9.5	15.0	9.6	15.2	10.0
33	8.2	6.4	9.3	7.9	10.4	8.2	11.4	9.0	12.5	9.3	13.5	9.5	14.6	9.5	14.9	9.9
35	8.2	6.4	9.3	7.9	10.4	8.2	11.4	9.0	12.5	9.3	13.5	9.5	14.3	9.4	14.6	9.8
37	8.2	6.4	9.3	7.9	10.4	8.2	11.4	9.0	12.5	9.3	13.5	9.5	14.1	9.3	14.4	9.7
40	8.2	6.4	9.3	7.9	10.4	8.2	11.4	9.0	12.5	9.3	13.2	9.4	13.8	9.2	14.0	9.6
43	8.2	6.4	9.3	7.9	10.4	8.2	11.4	9.0	12.5	9.3	12.9	9.3	13.4	9.0	13.7	9.5
46	8.2	6.4	9.3	7.9	10.4	8.2	11.4	9.0	12.3	9.2	12.5	9.1	13.0	8.9	13.3	9.4

2-10. High static pressure duct type

■ Model: ARXC036GTEH

Outdoor temperature	Indoor temperature															
	20°CDB/15°CWB		23°CDB/16°CWB		24°CDB/17°CWB		26°CDB/18°CWB		27°CDB/19°CWB		28°CDB/20°CWB		30°CDB/22°CWB		32°CDB/23°CWB	
°CDB	TC	SHC	TC	SHC	TC	SHC	TC	SHC	TC	SHC	TC	SHC	TC	SHC	TC	SHC
10	7.4	5.6	8.3	6.9	9.3	7.2	10.2	8.0	11.2	8.2	12.1	8.4	14.0	8.8	15.0	9.4
15	7.4	5.6	8.3	6.9	9.3	7.2	10.2	8.0	11.2	8.2	12.1	8.4	14.0	8.8	15.0	9.4
21	7.4	5.6	8.3	6.9	9.3	7.2	10.2	8.0	11.2	8.2	12.1	8.4	14.0	8.8	14.6	9.3
23	7.4	5.6	8.3	6.9	9.3	7.2	10.2	8.0	11.2	8.2	12.1	8.4	14.0	8.8	14.4	9.2
25	7.4	5.6	8.3	6.9	9.3	7.2	10.2	8.0	11.2	8.2	12.1	8.4	13.9	8.7	14.2	9.1
27	7.4	5.6	8.3	6.9	9.3	7.2	10.2	8.0	11.2	8.2	12.1	8.4	13.7	8.6	14.0	9.0
30	7.4	5.6	8.3	6.9	9.3	7.2	10.2	8.0	11.2	8.2	12.1	8.4	13.4	8.5	13.6	8.9
33	7.4	5.6	8.3	6.9	9.3	7.2	10.2	8.0	11.2	8.2	12.1	8.4	13.1	8.4	13.3	8.8
35	7.4	5.6	8.3	6.9	9.3	7.2	10.2	8.0	11.2	8.2	12.1	8.4	12.8	8.3	13.1	8.7
37	7.4	5.6	8.3	6.9	9.3	7.2	10.2	8.0	11.2	8.2	12.1	8.4	12.6	8.2	12.9	8.6
40	7.4	5.6	8.3	6.9	9.3	7.2	10.2	8.0	11.2	8.2	11.8	8.3	12.3	8.1	12.6	8.5
43	7.4	5.6	8.3	6.9	9.3	7.2	10.2	8.0	11.2	8.2	11.5	8.2	12.0	8.0	12.2	8.4
46	7.4	5.6	8.3	6.9	9.3	7.2	10.2	8.0	11.0	8.2	11.2	8.1	11.7	7.9	11.9	8.3

■ Model: ARXC045GTEH

Outdoor temperature	Indoor temperature															
	20°CDB/15°CWB		23°CDB/16°CWB		24°CDB/17°CWB		26°CDB/18°CWB		27°CDB/19°CWB		28°CDB/20°CWB		30°CDB/22°CWB		32°CDB/23°CWB	
°CDB	TC	SHC	TC	SHC	TC	SHC	TC	SHC	TC	SHC	TC	SHC	TC	SHC	TC	SHC
10	8.2	7.3	9.3	9.2	10.4	9.5	11.4	10.5	12.5	10.8	13.5	10.9	15.7	11.3	16.7	12.2
15	8.2	7.3	9.3	9.2	10.4	9.5	11.4	10.5	12.5	10.8	13.5	10.9	15.7	11.3	16.7	12.2
21	8.2	7.3	9.3	9.2	10.4	9.5	11.4	10.5	12.5	10.8	13.5	10.9	15.7	11.3	16.3	12.0
23	8.2	7.3	9.3	9.2	10.4	9.5	11.4	10.5	12.5	10.8	13.5	10.9	15.7	11.3	16.0	11.9
25	8.2	7.3	9.3	9.2	10.4	9.5	11.4	10.5	12.5	10.8	13.5	10.9	15.5	11.2	15.8	11.8
27	8.2	7.3	9.3	9.2	10.4	9.5	11.4	10.5	12.5	10.8	13.5	10.9	15.3	11.1	15.6	11.8
30	8.2	7.3	9.3	9.2	10.4	9.5	11.4	10.5	12.5	10.8	13.5	10.9	15.0	11.0	15.2	11.6
33	8.2	7.3	9.3	9.2	10.4	9.5	11.4	10.5	12.5	10.8	13.5	10.9	14.6	10.9	14.9	11.5
35	8.2	7.3	9.3	9.2	10.4	9.5	11.4	10.5	12.5	10.8	13.5	10.9	14.3	10.8	14.6	11.4
37	8.2	7.3	9.3	9.2	10.4	9.5	11.4	10.5	12.5	10.8	13.5	10.9	14.1	10.7	14.4	11.4
40	8.2	7.3	9.3	9.2	10.4	9.5	11.4	10.5	12.5	10.8	13.2	10.8	13.8	10.6	14.0	11.3
43	8.2	7.3	9.3	9.2	10.4	9.5	11.4	10.5	12.5	10.8	12.9	10.7	13.4	10.5	13.7	11.2
46	8.2	7.3	9.3	9.2	10.4	9.5	11.4	10.5	12.3	10.6	12.5	10.6	13.0	10.4	13.3	11.1

2-11. Compact floor type

■ Model: AG∗A004GCGH

Outdoor temperature	Indoor temperature																	
	18°CDB/14°CWB		20°CDB/15°CWB		23°CDB/16°CWB		24°CDB/17°CWB		26°CDB/18°CWB		27°CDB/19°CWB		28°CDB/20°CWB		30°CDB/22°CWB		32°CDB/23°CWB	
°CDB	TC	SHC	TC	SHC	TC	SHC	TC	SHC	TC	SHC	TC	SHC	TC	SHC	TC	SHC	TC	SHC
-15	0.6	0.5	0.7	0.6	0.8	0.7	0.9	0.8	1.0	0.8	1.1	0.9	1.2	0.9	1.4	0.9	1.5	1.0
-10	0.6	0.5	0.7	0.6	0.8	0.7	0.9	0.8	1.0	0.8	1.1	0.9	1.2	0.9	1.4	0.9	1.5	1.0
-5	0.6	0.5	0.7	0.6	0.8	0.7	0.9	0.8	1.0	0.8	1.1	0.9	1.2	0.9	1.4	0.9	1.5	1.0
0	0.6	0.5	0.7	0.6	0.8	0.7	0.9	0.8	1.0	0.8	1.1	0.9	1.2	0.9	1.4	0.9	1.5	1.0
5	0.6	0.5	0.7	0.6	0.8	0.7	0.9	0.8	1.0	0.8	1.1	0.9	1.2	0.9	1.4	0.9	1.5	1.0
10	0.6	0.5	0.7	0.6	0.8	0.7	0.9	0.8	1.0	0.8	1.1	0.9	1.2	0.9	1.4	0.9	1.5	1.0
15	0.6	0.5	0.7	0.6	0.8	0.7	0.9	0.8	1.0	0.8	1.1	0.9	1.2	0.9	1.4	0.9	1.5	1.0
21	0.6	0.5	0.7	0.6	0.8	0.7	0.9	0.8	1.0	0.8	1.1	0.9	1.2	0.9	1.4	0.9	1.4	1.0
23	0.6	0.5	0.7	0.6	0.8	0.7	0.9	0.8	1.0	0.8	1.1	0.9	1.2	0.9	1.4	0.9	1.4	1.0
25	0.6	0.5	0.7	0.6	0.8	0.7	0.9	0.8	1.0	0.8	1.1	0.9	1.2	0.9	1.4	0.9	1.4	0.9
27	0.6	0.5	0.7	0.6	0.8	0.7	0.9	0.8	1.0	0.8	1.1	0.9	1.2	0.9	1.3	0.9	1.4	0.9
30	0.6	0.5	0.7	0.6	0.8	0.7	0.9	0.8	1.0	0.8	1.1	0.9	1.2	0.9	1.3	0.9	1.3	0.9
33	0.6	0.5	0.7	0.6	0.8	0.7	0.9	0.8	1.0	0.8	1.1	0.9	1.2	0.9	1.3	0.9	1.3	0.9
35	0.6	0.5	0.7	0.6	0.8	0.7	0.9	0.8	1.0	0.8	1.1	0.9	1.2	0.9	1.3	0.9	1.3	0.9
37	0.6	0.5	0.7	0.6	0.8	0.7	0.9	0.8	1.0	0.8	1.1	0.9	1.2	0.9	1.2	0.9	1.3	0.9
40	0.6	0.5	0.7	0.6	0.8	0.7	0.9	0.8	1.0	0.8	1.1	0.9	1.2	0.9	1.2	0.8	1.2	0.9
43	0.6	0.5	0.7	0.6	0.8	0.7	0.9	0.8	1.0	0.8	1.1	0.9	1.1	0.8	1.2	0.8	1.2	0.9
46	0.6	0.5	0.7	0.6	0.8	0.7	0.9	0.8	1.0	0.8	1.1	0.8	1.1	0.8	1.1	0.8	1.2	0.9

■ Model: AG∗A007GCGH

Outdoor temperature	Indoor temperature																	
	18°CDB/14°CWB		20°CDB/15°CWB		23°CDB/16°CWB		24°CDB/17°CWB		26°CDB/18°CWB		27°CDB/19°CWB		28°CDB/20°CWB		30°CDB/22°CWB		32°CDB/23°CWB	
°CDB	TC	SHC	TC	SHC	TC	SHC	TC	SHC	TC	SHC	TC	SHC	TC	SHC	TC	SHC	TC	SHC
-15	1.3	0.9	1.4	1.1	1.6	1.4	1.8	1.4	2.0	1.6	2.2	1.6	2.4	1.6	2.8	1.7	2.9	1.8
-10	1.3	0.9	1.4	1.1	1.6	1.4	1.8	1.4	2.0	1.6	2.2	1.6	2.4	1.6	2.8	1.7	2.9	1.8
-5	1.3	0.9	1.4	1.1	1.6	1.4	1.8	1.4	2.0	1.6	2.2	1.6	2.4	1.6	2.8	1.7	2.9	1.8
0	1.3	0.9	1.4	1.1	1.6	1.4	1.8	1.4	2.0	1.6	2.2	1.6	2.4	1.6	2.8	1.7	2.9	1.8
5	1.3	0.9	1.4	1.1	1.6	1.4	1.8	1.4	2.0	1.6	2.2	1.6	2.4	1.6	2.8	1.7	2.9	1.8
10	1.3	0.9	1.4	1.1	1.6	1.4	1.8	1.4	2.0	1.6	2.2	1.6	2.4	1.6	2.8	1.7	2.9	1.8
15	1.3	0.9	1.4	1.1	1.6	1.4	1.8	1.4	2.0	1.6	2.2	1.6	2.4	1.6	2.8	1.7	2.9	1.8
21	1.3	0.9	1.4	1.1	1.6	1.4	1.8	1.4	2.0	1.6	2.2	1.6	2.4	1.6	2.8	1.7	2.9	1.8
23	1.3	0.9	1.4	1.1	1.6	1.4	1.8	1.4	2.0	1.6	2.2	1.6	2.4	1.6	2.8	1.7	2.8	1.8
25	1.3	0.9	1.4	1.1	1.6	1.4	1.8	1.4	2.0	1.6	2.2	1.6	2.4	1.6	2.7	1.7	2.8	1.8
27	1.3	0.9	1.4	1.1	1.6	1.4	1.8	1.4	2.0	1.6	2.2	1.6	2.4	1.6	2.7	1.7	2.7	1.8
30	1.3	0.9	1.4	1.1	1.6	1.4	1.8	1.4	2.0	1.6	2.2	1.6	2.4	1.6	2.6	1.7	2.7	1.7
33	1.3	0.9	1.4	1.1	1.6	1.4	1.8	1.4	2.0	1.6	2.2	1.6	2.4	1.6	2.6	1.6	2.6	1.7
35	1.3	0.9	1.4	1.1	1.6	1.4	1.8	1.4	2.0	1.6	2.2	1.6	2.4	1.6	2.5	1.6	2.6	1.7
37	1.3	0.9	1.4	1.1	1.6	1.4	1.8	1.4	2.0	1.6	2.2	1.6	2.4	1.6	2.5	1.6	2.5	1.7
40	1.3	0.9	1.4	1.1	1.6	1.4	1.8	1.4	2.0	1.6	2.2	1.6	2.3	1.6	2.4	1.6	2.5	1.7
43	1.3	0.9	1.4	1.1	1.6	1.4	1.8	1.4	2.0	1.6	2.2	1.6	2.3	1.6	2.4	1.6	2.4	1.6
46	1.3	0.9	1.4	1.1	1.6	1.4	1.8	1.4	2.0	1.6	2.2	1.6	2.2	1.6	2.3	1.5	2.3	1.6

■ Model: AG∗A009GCGH

Outdoor temperature	Indoor temperature																	
	18°CDB/14°CWB		20°CDB/15°CWB		23°CDB/16°CWB		24°CDB/17°CWB		26°CDB/18°CWB		27°CDB/19°CWB		28°CDB/20°CWB		30°CDB/22°CWB		32°CDB/23°CWB	
°CDB	TC	SHC	TC	SHC	TC	SHC	TC	SHC	TC	SHC	TC	SHC	TC	SHC	TC	SHC	TC	SHC
-15	1.6	1.2	1.8	1.4	2.1	1.7	2.3	1.8	2.6	2.0	2.8	2.1	3.0	2.1	3.5	2.2	3.8	2.4
-10	1.6	1.2	1.8	1.4	2.1	1.7	2.3	1.8	2.6	2.0	2.8	2.1	3.0	2.1	3.5	2.2	3.8	2.4
-5	1.6	1.2	1.8	1.4	2.1	1.7	2.3	1.8	2.6	2.0	2.8	2.1	3.0	2.1	3.5	2.2	3.8	2.4
0	1.6	1.2	1.8	1.4	2.1	1.7	2.3	1.8	2.6	2.0	2.8	2.1	3.0	2.1	3.5	2.2	3.8	2.4
5	1.6	1.2	1.8	1.4	2.1	1.7	2.3	1.8	2.6	2.0	2.8	2.1	3.0	2.1	3.5	2.2	3.8	2.4
10	1.6	1.2	1.8	1.4	2.1	1.7	2.3	1.8	2.6	2.0	2.8	2.1	3.0	2.1	3.5	2.2	3.8	2.4
15	1.6	1.2	1.8	1.4	2.1	1.7	2.3	1.8	2.6	2.0	2.8	2.1	3.0	2.1	3.5	2.2	3.8	2.4
21	1.6	1.2	1.8	1.4	2.1	1.7	2.3	1.8	2.6	2.0	2.8	2.1	3.0	2.1	3.5	2.2	3.7	2.3
23	1.6	1.2	1.8	1.4	2.1	1.7	2.3	1.8	2.6	2.0	2.8	2.1	3.0	2.1	3.5	2.2	3.6	2.3
25	1.6	1.2	1.8	1.4	2.1	1.7	2.3	1.8	2.6	2.0	2.8	2.1	3.0	2.1	3.5	2.2	3.5	2.3
27	1.6	1.2	1.8	1.4	2.1	1.7	2.3	1.8	2.6	2.0	2.8	2.1	3.0	2.1	3.4	2.2	3.5	2.3
30	1.6	1.2	1.8	1.4	2.1	1.7	2.3	1.8	2.6	2.0	2.8	2.1	3.0	2.1	3.4	2.1	3.4	2.2
33	1.6	1.2	1.8	1.4	2.1	1.7	2.3	1.8	2.6	2.0	2.8	2.1	3.0	2.1	3.3	2.1	3.3	2.2
35	1.6	1.2	1.8	1.4	2.1	1.7	2.3	1.8	2.6	2.0	2.8	2.1	3.0	2.1	3.2	2.1	3.3	2.2
37	1.6	1.2	1.8	1.4	2.1	1.7	2.3	1.8	2.6	2.0	2.8	2.1	3.0	2.1	3.2	2.1	3.2	2.2
40	1.6	1.2	1.8	1.4	2.1	1.7	2.3	1.8	2.6	2.0	2.8	2.1	3.0	2.1	3.1	2.0	3.1	2.1
43	1.6	1.2	1.8	1.4	2.1	1.7	2.3	1.8	2.6	2.0	2.8	2.1	2.9	2.0	3.0	2.0	3.1	2.1
46	1.6	1.2	1.8	1.4	2.1	1.7	2.3	1.8	2.6	2.0	2.8	2.0	2.8	2.0	2.9	2.0	3.0	2.1

■ Model: AG∗A012GCGH

Outdoor temperature	Indoor temperature																	
	18°CDB/14°CWB		20°CDB/15°CWB		23°CDB/16°CWB		24°CDB/17°CWB		26°CDB/18°CWB		27°CDB/19°CWB		28°CDB/20°CWB		30°CDB/22°CWB		32°CDB/23°CWB	
°CDB	TC	SHC	TC	SHC	TC	SHC	TC	SHC	TC	SHC	TC	SHC	TC	SHC	TC	SHC	TC	SHC
-15	2.1	1.6	2.4	1.8	2.7	2.3	3.0	2.4	3.3	2.6	3.6	2.7	3.9	2.8	4.5	2.9	4.8	3.1
-10	2.1	1.6	2.4	1.8	2.7	2.3	3.0	2.4	3.3	2.6	3.6	2.7	3.9	2.8	4.5	2.9	4.8	3.1
-5	2.1	1.6	2.4	1.8	2.7	2.3	3.0	2.4	3.3	2.6	3.6	2.7	3.9	2.8	4.5	2.9	4.8	3.1
0	2.1	1.6	2.4	1.8	2.7	2.3	3.0	2.4	3.3	2.6	3.6	2.7	3.9	2.8	4.5	2.9	4.8	3.1
5	2.1	1.6	2.4	1.8	2.7	2.3	3.0	2.4	3.3	2.6	3.6	2.7	3.9	2.8	4.5	2.9	4.8	3.1
10	2.1	1.6	2.4	1.8	2.7	2.3	3.0	2.4	3.3	2.6	3.6	2.7	3.9	2.8	4.5	2.9	4.8	3.1
15	2.1	1.6	2.4	1.8	2.7	2.3	3.0	2.4	3.3	2.6	3.6	2.7	3.9	2.8	4.5	2.9	4.8	3.1
21	2.1	1.6	2.4	1.8	2.7	2.3	3.0	2.4	3.3	2.6	3.6	2.7	3.9	2.8	4.5	2.9	4.7	3.0
23	2.1	1.6	2.4	1.8	2.7	2.3	3.0	2.4	3.3	2.6	3.6	2.7	3.9	2.8	4.5	2.9	4.6	3.0
25	2.1	1.6	2.4	1.8	2.7	2.3	3.0	2.4	3.3	2.6	3.6	2.7	3.9	2.8	4.5	2.9	4.6	3.0
27	2.1	1.6	2.4	1.8	2.7	2.3	3.0	2.4	3.3	2.6	3.6	2.7	3.9	2.8	4.4	2.8	4.5	3.0
30	2.1	1.6	2.4	1.8	2.7	2.3	3.0	2.4	3.3	2.6	3.6	2.7	3.9	2.8	4.3	2.8	4.4	2.9
33	2.1	1.6	2.4	1.8	2.7	2.3	3.0	2.4	3.3	2.6	3.6	2.7	3.9	2.8	4.2	2.7	4.3	2.9
35	2.1	1.6	2.4	1.8	2.7	2.3	3.0	2.4	3.3	2.6	3.6	2.7	3.9	2.8	4.1	2.7	4.2	2.9
37	2.1	1.6	2.4	1.8	2.7	2.3	3.0	2.4	3.3	2.6	3.6	2.7	3.9	2.8	4.1	2.7	4.1	2.8
40	2.1	1.6	2.4	1.8	2.7	2.3	3.0	2.4	3.3	2.6	3.6	2.7	3.8	2.7	4.0	2.7	4.0	2.8
43	2.1	1.6	2.4	1.8	2.7	2.3	3.0	2.4	3.3	2.6	3.6	2.7	3.7	2.7	3.9	2.6	3.9	2.8
46	2.1	1.6	2.4	1.8	2.7	2.3	3.0	2.4	3.3	2.6	3.5	2.7	3.6	2.6	3.8	2.6	3.8	2.7

■ Model: AG∗A014GCGH

Outdoor temperature	Indoor temperature																	
	18°CDB/14°CWB		20°CDB/15°CWB		23°CDB/16°CWB		24°CDB/17°CWB		26°CDB/18°CWB		27°CDB/19°CWB		28°CDB/20°CWB		30°CDB/22°CWB		32°CDB/23°CWB	
°CDB	TC	SHC	TC	SHC	TC	SHC	TC	SHC	TC	SHC	TC	SHC	TC	SHC	TC	SHC	TC	SHC
-15	2.3	1.8	2.6	2.1	3.0	2.5	3.3	2.7	3.7	3.0	4.0	3.0	4.3	3.1	5.0	3.2	5.4	3.5
-10	2.3	1.8	2.6	2.1	3.0	2.5	3.3	2.7	3.7	3.0	4.0	3.0	4.3	3.1	5.0	3.2	5.4	3.5
-5	2.3	1.8	2.6	2.1	3.0	2.5	3.3	2.7	3.7	3.0	4.0	3.0	4.3	3.1	5.0	3.2	5.4	3.5
0	2.3	1.8	2.6	2.1	3.0	2.5	3.3	2.7	3.7	3.0	4.0	3.0	4.3	3.1	5.0	3.2	5.4	3.5
5	2.3	1.8	2.6	2.1	3.0	2.5	3.3	2.7	3.7	3.0	4.0	3.0	4.3	3.1	5.0	3.2	5.4	3.5
10	2.3	1.8	2.6	2.1	3.0	2.5	3.3	2.7	3.7	3.0	4.0	3.0	4.3	3.1	5.0	3.2	5.4	3.5
15	2.3	1.8	2.6	2.1	3.0	2.5	3.3	2.7	3.7	3.0	4.0	3.0	4.3	3.1	5.0	3.2	5.4	3.5
21	2.3	1.8	2.6	2.1	3.0	2.5	3.3	2.7	3.7	3.0	4.0	3.0	4.3	3.1	5.0	3.2	5.2	3.4
23	2.3	1.8	2.6	2.1	3.0	2.5	3.3	2.7	3.7	3.0	4.0	3.0	4.3	3.1	5.0	3.2	5.1	3.4
25	2.3	1.8	2.6	2.1	3.0	2.5	3.3	2.7	3.7	3.0	4.0	3.0	4.3	3.1	5.0	3.2	5.1	3.4
27	2.3	1.8	2.6	2.1	3.0	2.5	3.3	2.7	3.7	3.0	4.0	3.0	4.3	3.1	4.9	3.2	5.0	3.3
30	2.3	1.8	2.6	2.1	3.0	2.5	3.3	2.7	3.7	3.0	4.0	3.0	4.3	3.1	4.8	3.1	4.9	3.3
33	2.3	1.8	2.6	2.1	3.0	2.5	3.3	2.7	3.7	3.0	4.0	3.0	4.3	3.1	4.7	3.1	4.8	3.2
35	2.3	1.8	2.6	2.1	3.0	2.5	3.3	2.7	3.7	3.0	4.0	3.0	4.3	3.1	4.6	3.1	4.7	3.2
37	2.3	1.8	2.6	2.1	3.0	2.5	3.3	2.7	3.7	3.0	4.0	3.0	4.3	3.1	4.5	3.0	4.6	3.2
40	2.3	1.8	2.6	2.1	3.0	2.5	3.3	2.7	3.7	3.0	4.0	3.0	4.2	3.1	4.4	3.0	4.5	3.2
43	2.3	1.8	2.6	2.1	3.0	2.5	3.3	2.7	3.7	3.0	4.0	3.0	4.1	3.0	4.3	3.0	4.4	3.1
46	2.3	1.8	2.6	2.1	3.0	2.5	3.3	2.7	3.7	3.0	3.9	3.0	4.0	3.0	4.2	2.9	4.2	3.1

2-12. Compact floor type (EEV external type model)

MODEL SELECTION

■ Model: AG∗E004GCEH

Outdoor temperature	Indoor temperature																	
	18°CDB/14°CWB		20°CDB/15°CWB		23°CDB/16°CWB		24°CDB/17°CWB		26°CDB/18°CWB		27°CDB/19°CWB		28°CDB/20°CWB		30°CDB/22°CWB		32°CDB/23°CWB	
°CDB	TC	SHC	TC	SHC	TC	SHC	TC	SHC	TC	SHC	TC	SHC	TC	SHC	TC	SHC	TC	SHC
-15	0.6	0.5	0.7	0.6	0.8	0.7	0.9	0.8	1.0	0.8	1.1	0.9	1.2	0.9	1.4	0.9	1.5	1.0
-10	0.6	0.5	0.7	0.6	0.8	0.7	0.9	0.8	1.0	0.8	1.1	0.9	1.2	0.9	1.4	0.9	1.5	1.0
-5	0.6	0.5	0.7	0.6	0.8	0.7	0.9	0.8	1.0	0.8	1.1	0.9	1.2	0.9	1.4	0.9	1.5	1.0
0	0.6	0.5	0.7	0.6	0.8	0.7	0.9	0.8	1.0	0.8	1.1	0.9	1.2	0.9	1.4	0.9	1.5	1.0
5	0.6	0.5	0.7	0.6	0.8	0.7	0.9	0.8	1.0	0.8	1.1	0.9	1.2	0.9	1.4	0.9	1.5	1.0
10	0.6	0.5	0.7	0.6	0.8	0.7	0.9	0.8	1.0	0.8	1.1	0.9	1.2	0.9	1.4	0.9	1.5	1.0
15	0.6	0.5	0.7	0.6	0.8	0.7	0.9	0.8	1.0	0.8	1.1	0.9	1.2	0.9	1.4	0.9	1.5	1.0
21	0.6	0.5	0.7	0.6	0.8	0.7	0.9	0.8	1.0	0.8	1.1	0.9	1.2	0.9	1.4	0.9	1.4	1.0
23	0.6	0.5	0.7	0.6	0.8	0.7	0.9	0.8	1.0	0.8	1.1	0.9	1.2	0.9	1.4	0.9	1.4	1.0
25	0.6	0.5	0.7	0.6	0.8	0.7	0.9	0.8	1.0	0.8	1.1	0.9	1.2	0.9	1.4	0.9	1.4	0.9
27	0.6	0.5	0.7	0.6	0.8	0.7	0.9	0.8	1.0	0.8	1.1	0.9	1.2	0.9	1.3	0.9	1.4	0.9
30	0.6	0.5	0.7	0.6	0.8	0.7	0.9	0.8	1.0	0.8	1.1	0.9	1.2	0.9	1.3	0.9	1.3	0.9
33	0.6	0.5	0.7	0.6	0.8	0.7	0.9	0.8	1.0	0.8	1.1	0.9	1.2	0.9	1.3	0.9	1.3	0.9
35	0.6	0.5	0.7	0.6	0.8	0.7	0.9	0.8	1.0	0.8	1.1	0.9	1.2	0.9	1.3	0.9	1.3	0.9
37	0.6	0.5	0.7	0.6	0.8	0.7	0.9	0.8	1.0	0.8	1.1	0.9	1.2	0.9	1.2	0.9	1.3	0.9
40	0.6	0.5	0.7	0.6	0.8	0.7	0.9	0.8	1.0	0.8	1.1	0.9	1.2	0.9	1.2	0.8	1.2	0.9
43	0.6	0.5	0.7	0.6	0.8	0.7	0.9	0.8	1.0	0.8	1.1	0.9	1.1	0.8	1.2	0.8	1.2	0.9
46	0.6	0.5	0.7	0.6	0.8	0.7	0.9	0.8	1.0	0.8	1.1	0.8	1.1	0.8	1.1	0.8	1.2	0.9

■ Model: AG∗E007GCEH

Outdoor temperature	Indoor temperature																	
	18°CDB/14°CWB		20°CDB/15°CWB		23°CDB/16°CWB		24°CDB/17°CWB		26°CDB/18°CWB		27°CDB/19°CWB		28°CDB/20°CWB		30°CDB/22°CWB		32°CDB/23°CWB	
°CDB	TC	SHC	TC	SHC	TC	SHC	TC	SHC	TC	SHC	TC	SHC	TC	SHC	TC	SHC	TC	SHC
-15	1.3	0.9	1.4	1.1	1.6	1.4	1.8	1.4	2.0	1.6	2.2	1.6	2.4	1.6	2.8	1.7	2.9	1.8
-10	1.3	0.9	1.4	1.1	1.6	1.4	1.8	1.4	2.0	1.6	2.2	1.6	2.4	1.6	2.8	1.7	2.9	1.8
-5	1.3	0.9	1.4	1.1	1.6	1.4	1.8	1.4	2.0	1.6	2.2	1.6	2.4	1.6	2.8	1.7	2.9	1.8
0	1.3	0.9	1.4	1.1	1.6	1.4	1.8	1.4	2.0	1.6	2.2	1.6	2.4	1.6	2.8	1.7	2.9	1.8
5	1.3	0.9	1.4	1.1	1.6	1.4	1.8	1.4	2.0	1.6	2.2	1.6	2.4	1.6	2.8	1.7	2.9	1.8
10	1.3	0.9	1.4	1.1	1.6	1.4	1.8	1.4	2.0	1.6	2.2	1.6	2.4	1.6	2.8	1.7	2.9	1.8
15	1.3	0.9	1.4	1.1	1.6	1.4	1.8	1.4	2.0	1.6	2.2	1.6	2.4	1.6	2.8	1.7	2.9	1.8
21	1.3	0.9	1.4	1.1	1.6	1.4	1.8	1.4	2.0	1.6	2.2	1.6	2.4	1.6	2.8	1.7	2.9	1.8
23	1.3	0.9	1.4	1.1	1.6	1.4	1.8	1.4	2.0	1.6	2.2	1.6	2.4	1.6	2.8	1.7	2.8	1.8
25	1.3	0.9	1.4	1.1	1.6	1.4	1.8	1.4	2.0	1.6	2.2	1.6	2.4	1.6	2.7	1.7	2.8	1.8
27	1.3	0.9	1.4	1.1	1.6	1.4	1.8	1.4	2.0	1.6	2.2	1.6	2.4	1.6	2.7	1.7	2.7	1.8
30	1.3	0.9	1.4	1.1	1.6	1.4	1.8	1.4	2.0	1.6	2.2	1.6	2.4	1.6	2.6	1.7	2.7	1.7
33	1.3	0.9	1.4	1.1	1.6	1.4	1.8	1.4	2.0	1.6	2.2	1.6	2.4	1.6	2.6	1.6	2.6	1.7
35	1.3	0.9	1.4	1.1	1.6	1.4	1.8	1.4	2.0	1.6	2.2	1.6	2.4	1.6	2.5	1.6	2.6	1.7
37	1.3	0.9	1.4	1.1	1.6	1.4	1.8	1.4	2.0	1.6	2.2	1.6	2.4	1.6	2.5	1.6	2.5	1.7
40	1.3	0.9	1.4	1.1	1.6	1.4	1.8	1.4	2.0	1.6	2.2	1.6	2.3	1.6	2.4	1.6	2.5	1.7
43	1.3	0.9	1.4	1.1	1.6	1.4	1.8	1.4	2.0	1.6	2.2	1.6	2.3	1.6	2.4	1.6	2.4	1.6
46	1.3	0.9	1.4	1.1	1.6	1.4	1.8	1.4	2.0	1.6	2.2	1.6	2.2	1.6	2.3	1.5	2.3	1.6

■ Model: AG∗E009GCEH

Outdoor temperature	Indoor temperature																	
	18°CDB/14°CWB		20°CDB/15°CWB		23°CDB/16°CWB		24°CDB/17°CWB		26°CDB/18°CWB		27°CDB/19°CWB		28°CDB/20°CWB		30°CDB/22°CWB		32°CDB/23°CWB	
°CDB	TC	SHC	TC	SHC	TC	SHC	TC	SHC	TC	SHC	TC	SHC	TC	SHC	TC	SHC	TC	SHC
-15	1.6	1.2	1.8	1.4	2.1	1.7	2.3	1.8	2.6	2.0	2.8	2.1	3.0	2.1	3.5	2.2	3.8	2.4
-10	1.6	1.2	1.8	1.4	2.1	1.7	2.3	1.8	2.6	2.0	2.8	2.1	3.0	2.1	3.5	2.2	3.8	2.4
-5	1.6	1.2	1.8	1.4	2.1	1.7	2.3	1.8	2.6	2.0	2.8	2.1	3.0	2.1	3.5	2.2	3.8	2.4
0	1.6	1.2	1.8	1.4	2.1	1.7	2.3	1.8	2.6	2.0	2.8	2.1	3.0	2.1	3.5	2.2	3.8	2.4
5	1.6	1.2	1.8	1.4	2.1	1.7	2.3	1.8	2.6	2.0	2.8	2.1	3.0	2.1	3.5	2.2	3.8	2.4
10	1.6	1.2	1.8	1.4	2.1	1.7	2.3	1.8	2.6	2.0	2.8	2.1	3.0	2.1	3.5	2.2	3.8	2.4
15	1.6	1.2	1.8	1.4	2.1	1.7	2.3	1.8	2.6	2.0	2.8	2.1	3.0	2.1	3.5	2.2	3.8	2.4
21	1.6	1.2	1.8	1.4	2.1	1.7	2.3	1.8	2.6	2.0	2.8	2.1	3.0	2.1	3.5	2.2	3.7	2.3
23	1.6	1.2	1.8	1.4	2.1	1.7	2.3	1.8	2.6	2.0	2.8	2.1	3.0	2.1	3.5	2.2	3.6	2.3
25	1.6	1.2	1.8	1.4	2.1	1.7	2.3	1.8	2.6	2.0	2.8	2.1	3.0	2.1	3.5	2.2	3.5	2.3
27	1.6	1.2	1.8	1.4	2.1	1.7	2.3	1.8	2.6	2.0	2.8	2.1	3.0	2.1	3.4	2.2	3.5	2.3
30	1.6	1.2	1.8	1.4	2.1	1.7	2.3	1.8	2.6	2.0	2.8	2.1	3.0	2.1	3.4	2.1	3.4	2.2
33	1.6	1.2	1.8	1.4	2.1	1.7	2.3	1.8	2.6	2.0	2.8	2.1	3.0	2.1	3.3	2.1	3.3	2.2
35	1.6	1.2	1.8	1.4	2.1	1.7	2.3	1.8	2.6	2.0	2.8	2.1	3.0	2.1	3.2	2.1	3.3	2.2
37	1.6	1.2	1.8	1.4	2.1	1.7	2.3	1.8	2.6	2.0	2.8	2.1	3.0	2.1	3.2	2.1	3.2	2.2
40	1.6	1.2	1.8	1.4	2.1	1.7	2.3	1.8	2.6	2.0	2.8	2.1	3.0	2.1	3.1	2.0	3.1	2.1
43	1.6	1.2	1.8	1.4	2.1	1.7	2.3	1.8	2.6	2.0	2.8	2.1	2.9	2.0	3.0	2.0	3.1	2.1
46	1.6	1.2	1.8	1.4	2.1	1.7	2.3	1.8	2.6	2.0	2.8	2.0	2.8	2.0	2.9	2.0	3.0	2.1

■ Model: AG∗E012GCEH

Outdoor temperature	Indoor temperature																	
	18°CDB/14°CWB		20°CDB/15°CWB		23°CDB/16°CWB		24°CDB/17°CWB		26°CDB/18°CWB		27°CDB/19°CWB		28°CDB/20°CWB		30°CDB/22°CWB		32°CDB/23°CWB	
°CDB	TC	SHC	TC	SHC	TC	SHC	TC	SHC	TC	SHC	TC	SHC	TC	SHC	TC	SHC	TC	SHC
-15	2.1	1.6	2.4	1.8	2.7	2.3	3.0	2.4	3.3	2.6	3.6	2.7	3.9	2.8	4.5	2.9	4.8	3.1
-10	2.1	1.6	2.4	1.8	2.7	2.3	3.0	2.4	3.3	2.6	3.6	2.7	3.9	2.8	4.5	2.9	4.8	3.1
-5	2.1	1.6	2.4	1.8	2.7	2.3	3.0	2.4	3.3	2.6	3.6	2.7	3.9	2.8	4.5	2.9	4.8	3.1
0	2.1	1.6	2.4	1.8	2.7	2.3	3.0	2.4	3.3	2.6	3.6	2.7	3.9	2.8	4.5	2.9	4.8	3.1
5	2.1	1.6	2.4	1.8	2.7	2.3	3.0	2.4	3.3	2.6	3.6	2.7	3.9	2.8	4.5	2.9	4.8	3.1
10	2.1	1.6	2.4	1.8	2.7	2.3	3.0	2.4	3.3	2.6	3.6	2.7	3.9	2.8	4.5	2.9	4.8	3.1
15	2.1	1.6	2.4	1.8	2.7	2.3	3.0	2.4	3.3	2.6	3.6	2.7	3.9	2.8	4.5	2.9	4.8	3.1
21	2.1	1.6	2.4	1.8	2.7	2.3	3.0	2.4	3.3	2.6	3.6	2.7	3.9	2.8	4.5	2.9	4.7	3.0
23	2.1	1.6	2.4	1.8	2.7	2.3	3.0	2.4	3.3	2.6	3.6	2.7	3.9	2.8	4.5	2.9	4.6	3.0
25	2.1	1.6	2.4	1.8	2.7	2.3	3.0	2.4	3.3	2.6	3.6	2.7	3.9	2.8	4.5	2.9	4.6	3.0
27	2.1	1.6	2.4	1.8	2.7	2.3	3.0	2.4	3.3	2.6	3.6	2.7	3.9	2.8	4.4	2.8	4.5	3.0
30	2.1	1.6	2.4	1.8	2.7	2.3	3.0	2.4	3.3	2.6	3.6	2.7	3.9	2.8	4.3	2.8	4.4	2.9
33	2.1	1.6	2.4	1.8	2.7	2.3	3.0	2.4	3.3	2.6	3.6	2.7	3.9	2.8	4.2	2.7	4.3	2.9
35	2.1	1.6	2.4	1.8	2.7	2.3	3.0	2.4	3.3	2.6	3.6	2.7	3.9	2.8	4.1	2.7	4.2	2.9
37	2.1	1.6	2.4	1.8	2.7	2.3	3.0	2.4	3.3	2.6	3.6	2.7	3.9	2.8	4.1	2.7	4.1	2.8
40	2.1	1.6	2.4	1.8	2.7	2.3	3.0	2.4	3.3	2.6	3.6	2.7	3.8	2.7	4.0	2.7	4.0	2.8
43	2.1	1.6	2.4	1.8	2.7	2.3	3.0	2.4	3.3	2.6	3.6	2.7	3.7	2.7	3.9	2.6	3.9	2.8
46	2.1	1.6	2.4	1.8	2.7	2.3	3.0	2.4	3.3	2.6	3.5	2.7	3.6	2.6	3.8	2.6	3.8	2.7

■ Model: AG∗E014GCEH

Outdoor temperature	Indoor temperature																	
	18°CDB/14°CWB		20°CDB/15°CWB		23°CDB/16°CWB		24°CDB/17°CWB		26°CDB/18°CWB		27°CDB/19°CWB		28°CDB/20°CWB		30°CDB/22°CWB		32°CDB/23°CWB	
°CDB	TC	SHC	TC	SHC	TC	SHC	TC	SHC	TC	SHC	TC	SHC	TC	SHC	TC	SHC	TC	SHC
-15	2.3	1.8	2.6	2.1	3.0	2.5	3.3	2.7	3.7	3.0	4.0	3.0	4.3	3.1	5.0	3.2	5.4	3.5
-10	2.3	1.8	2.6	2.1	3.0	2.5	3.3	2.7	3.7	3.0	4.0	3.0	4.3	3.1	5.0	3.2	5.4	3.5
-5	2.3	1.8	2.6	2.1	3.0	2.5	3.3	2.7	3.7	3.0	4.0	3.0	4.3	3.1	5.0	3.2	5.4	3.5
0	2.3	1.8	2.6	2.1	3.0	2.5	3.3	2.7	3.7	3.0	4.0	3.0	4.3	3.1	5.0	3.2	5.4	3.5
5	2.3	1.8	2.6	2.1	3.0	2.5	3.3	2.7	3.7	3.0	4.0	3.0	4.3	3.1	5.0	3.2	5.4	3.5
10	2.3	1.8	2.6	2.1	3.0	2.5	3.3	2.7	3.7	3.0	4.0	3.0	4.3	3.1	5.0	3.2	5.4	3.5
15	2.3	1.8	2.6	2.1	3.0	2.5	3.3	2.7	3.7	3.0	4.0	3.0	4.3	3.1	5.0	3.2	5.4	3.5
21	2.3	1.8	2.6	2.1	3.0	2.5	3.3	2.7	3.7	3.0	4.0	3.0	4.3	3.1	5.0	3.2	5.2	3.4
23	2.3	1.8	2.6	2.1	3.0	2.5	3.3	2.7	3.7	3.0	4.0	3.0	4.3	3.1	5.0	3.2	5.1	3.4
25	2.3	1.8	2.6	2.1	3.0	2.5	3.3	2.7	3.7	3.0	4.0	3.0	4.3	3.1	5.0	3.2	5.1	3.4
27	2.3	1.8	2.6	2.1	3.0	2.5	3.3	2.7	3.7	3.0	4.0	3.0	4.3	3.1	4.9	3.2	5.0	3.3
30	2.3	1.8	2.6	2.1	3.0	2.5	3.3	2.7	3.7	3.0	4.0	3.0	4.3	3.1	4.8	3.1	4.9	3.3
33	2.3	1.8	2.6	2.1	3.0	2.5	3.3	2.7	3.7	3.0	4.0	3.0	4.3	3.1	4.7	3.1	4.8	3.2
35	2.3	1.8	2.6	2.1	3.0	2.5	3.3	2.7	3.7	3.0	4.0	3.0	4.3	3.1	4.6	3.1	4.7	3.2
37	2.3	1.8	2.6	2.1	3.0	2.5	3.3	2.7	3.7	3.0	4.0	3.0	4.3	3.1	4.5	3.0	4.6	3.2
40	2.3	1.8	2.6	2.1	3.0	2.5	3.3	2.7	3.7	3.0	4.0	3.0	4.2	3.1	4.4	3.0	4.5	3.2
43	2.3	1.8	2.6	2.1	3.0	2.5	3.3	2.7	3.7	3.0	4.0	3.0	4.1	3.0	4.3	3.0	4.4	3.1
46	2.3	1.8	2.6	2.1	3.0	2.5	3.3	2.7	3.7	3.0	3.9	3.0	4.0	3.0	4.2	2.9	4.2	3.1

2-13. Floor/Ceiling type

■ Model: AB∗A012GTEH

Outdoor temperature	Indoor temperature															
	20°CDB/15°CWB		23°CDB/16°CWB		24°CDB/17°CWB		26°CDB/18°CWB		27°CDB/19°CWB		28°CDB/20°CWB		30°CDB/22°CWB		32°CDB/23°CWB	
°CDB	TC	SHC	TC	SHC	TC	SHC	TC	SHC	TC	SHC	TC	SHC	TC	SHC	TC	SHC
10	2.4	2.0	2.7	2.4	3.0	2.5	3.3	2.8	3.6	2.9	3.9	2.9	4.5	3.0	4.8	3.3
15	2.4	2.0	2.7	2.4	3.0	2.5	3.3	2.8	3.6	2.9	3.9	2.9	4.5	3.0	4.8	3.3
21	2.4	2.0	2.7	2.4	3.0	2.5	3.3	2.8	3.6	2.9	3.9	2.9	4.5	3.0	4.7	3.2
23	2.4	2.0	2.7	2.4	3.0	2.5	3.3	2.8	3.6	2.9	3.9	2.9	4.5	3.0	4.6	3.2
25	2.4	2.0	2.7	2.4	3.0	2.5	3.3	2.8	3.6	2.9	3.9	2.9	4.5	3.0	4.6	3.2
27	2.4	2.0	2.7	2.4	3.0	2.5	3.3	2.8	3.6	2.9	3.9	2.9	4.4	3.0	4.5	3.1
30	2.4	2.0	2.7	2.4	3.0	2.5	3.3	2.8	3.6	2.9	3.9	2.9	4.3	3.0	4.4	3.1
33	2.4	2.0	2.7	2.4	3.0	2.5	3.3	2.8	3.6	2.9	3.9	2.9	4.2	2.9	4.3	3.1
35	2.4	2.0	2.7	2.4	3.0	2.5	3.3	2.8	3.6	2.9	3.9	2.9	4.1	2.9	4.2	3.0
37	2.4	2.0	2.7	2.4	3.0	2.5	3.3	2.8	3.6	2.9	3.9	2.9	4.1	2.9	4.1	3.0
40	2.4	2.0	2.7	2.4	3.0	2.5	3.3	2.8	3.6	2.9	3.8	2.9	4.0	2.8	4.0	3.0
43	2.4	2.0	2.7	2.4	3.0	2.5	3.3	2.8	3.6	2.9	3.7	2.9	3.9	2.8	3.9	3.0
46	2.4	2.0	2.7	2.4	3.0	2.5	3.3	2.8	3.5	2.9	3.6	2.8	3.8	2.8	3.8	2.9

■ Model: AB∗A014GTEH

Outdoor temperature	Indoor temperature															
	20°CDB/15°CWB		23°CDB/16°CWB		24°CDB/17°CWB		26°CDB/18°CWB		27°CDB/19°CWB		28°CDB/20°CWB		30°CDB/22°CWB		32°CDB/23°CWB	
°CDB	TC	SHC	TC	SHC	TC	SHC	TC	SHC	TC	SHC	TC	SHC	TC	SHC	TC	SHC
10	3.0	2.4	3.3	3.0	3.7	3.1	4.1	3.4	4.5	3.5	4.9	3.6	5.6	3.7	6.0	4.0
15	3.0	2.4	3.3	3.0	3.7	3.1	4.1	3.4	4.5	3.5	4.9	3.6	5.6	3.7	6.0	4.0
21	3.0	2.4	3.3	3.0	3.7	3.1	4.1	3.4	4.5	3.5	4.9	3.6	5.6	3.7	5.9	3.9
23	3.0	2.4	3.3	3.0	3.7	3.1	4.1	3.4	4.5	3.5	4.9	3.6	5.6	3.7	5.8	3.9
25	3.0	2.4	3.3	3.0	3.7	3.1	4.1	3.4	4.5	3.5	4.9	3.6	5.6	3.7	5.7	3.9
27	3.0	2.4	3.3	3.0	3.7	3.1	4.1	3.4	4.5	3.5	4.9	3.6	5.5	3.6	5.6	3.8
30	3.0	2.4	3.3	3.0	3.7	3.1	4.1	3.4	4.5	3.5	4.9	3.6	5.4	3.6	5.5	3.8
33	3.0	2.4	3.3	3.0	3.7	3.1	4.1	3.4	4.5	3.5	4.9	3.6	5.3	3.6	5.4	3.7
35	3.0	2.4	3.3	3.0	3.7	3.1	4.1	3.4	4.5	3.5	4.9	3.6	5.2	3.5	5.3	3.7
37	3.0	2.4	3.3	3.0	3.7	3.1	4.1	3.4	4.5	3.5	4.9	3.6	5.1	3.5	5.2	3.7
40	3.0	2.4	3.3	3.0	3.7	3.1	4.1	3.4	4.5	3.5	4.8	3.5	5.0	3.4	5.0	3.6
43	3.0	2.4	3.3	3.0	3.7	3.1	4.1	3.4	4.5	3.5	4.6	3.5	4.8	3.4	4.9	3.6
46	3.0	2.4	3.3	3.0	3.7	3.1	4.1	3.4	4.4	3.5	4.5	3.4	4.7	3.4	4.8	3.5

■ Model: AB∗A018GTEH

Outdoor temperature	Indoor temperature															
	20°CDB/15°CWB		23°CDB/16°CWB		24°CDB/17°CWB		26°CDB/18°CWB		27°CDB/19°CWB		28°CDB/20°CWB		30°CDB/22°CWB		32°CDB/23°CWB	
°CDB	TC	SHC	TC	SHC	TC	SHC	TC	SHC	TC	SHC	TC	SHC	TC	SHC	TC	SHC
10	3.7	3.0	4.2	3.8	4.6	3.9	5.1	4.3	5.6	4.4	6.1	4.5	7.0	4.7	7.5	5.0
15	3.7	3.0	4.2	3.8	4.6	3.9	5.1	4.3	5.6	4.4	6.1	4.5	7.0	4.7	7.5	5.0
21	3.7	3.0	4.2	3.8	4.6	3.9	5.1	4.3	5.6	4.4	6.1	4.5	7.0	4.7	7.3	5.0
23	3.7	3.0	4.2	3.8	4.6	3.9	5.1	4.3	5.6	4.4	6.1	4.5	7.0	4.7	7.2	4.9
25	3.7	3.0	4.2	3.8	4.6	3.9	5.1	4.3	5.6	4.4	6.1	4.5	7.0	4.6	7.1	4.9
27	3.7	3.0	4.2	3.8	4.6	3.9	5.1	4.3	5.6	4.4	6.1	4.5	6.8	4.6	7.0	4.8
30	3.7	3.0	4.2	3.8	4.6	3.9	5.1	4.3	5.6	4.4	6.1	4.5	6.7	4.5	6.8	4.8
33	3.7	3.0	4.2	3.8	4.6	3.9	5.1	4.3	5.6	4.4	6.1	4.5	6.5	4.5	6.7	4.7
35	3.7	3.0	4.2	3.8	4.6	3.9	5.1	4.3	5.6	4.4	6.1	4.5	6.4	4.4	6.5	4.7
37	3.7	3.0	4.2	3.8	4.6	3.9	5.1	4.3	5.6	4.4	6.1	4.5	6.3	4.4	6.4	4.6
40	3.7	3.0	4.2	3.8	4.6	3.9	5.1	4.3	5.6	4.4	5.9	4.4	6.2	4.4	6.3	4.6
43	3.7	3.0	4.2	3.8	4.6	3.9	5.1	4.3	5.6	4.4	5.8	4.4	6.0	4.3	6.1	4.5
46	3.7	3.0	4.2	3.8	4.6	3.9	5.1	4.3	5.5	4.4	5.6	4.3	5.8	4.2	5.9	4.5

■ Model: AB∗A024GTEH

Outdoor temperature	Indoor temperature															
	20°CDB/15°CWB		23°CDB/16°CWB		24°CDB/17°CWB		26°CDB/18°CWB		27°CDB/19°CWB		28°CDB/20°CWB		30°CDB/22°CWB		32°CDB/23°CWB	
°CDB	TC	SHC	TC	SHC	TC	SHC	TC	SHC	TC	SHC	TC	SHC	TC	SHC	TC	SHC
10	4.7	3.4	5.3	4.2	5.9	4.4	6.5	4.9	7.1	5.0	7.7	5.2	8.9	5.4	9.5	5.8
15	4.7	3.4	5.3	4.2	5.9	4.4	6.5	4.9	7.1	5.0	7.7	5.2	8.9	5.4	9.5	5.8
21	4.7	3.4	5.3	4.2	5.9	4.4	6.5	4.9	7.1	5.0	7.7	5.2	8.9	5.4	9.3	5.7
23	4.7	3.4	5.3	4.2	5.9	4.4	6.5	4.9	7.1	5.0	7.7	5.2	8.9	5.4	9.1	5.6
25	4.7	3.4	5.3	4.2	5.9	4.4	6.5	4.9	7.1	5.0	7.7	5.2	8.8	5.4	9.0	5.6
27	4.7	3.4	5.3	4.2	5.9	4.4	6.5	4.9	7.1	5.0	7.7	5.2	8.7	5.3	8.8	5.5
30	4.7	3.4	5.3	4.2	5.9	4.4	6.5	4.9	7.1	5.0	7.7	5.2	8.5	5.2	8.6	5.4
33	4.7	3.4	5.3	4.2	5.9	4.4	6.5	4.9	7.1	5.0	7.7	5.2	8.3	5.2	8.4	5.4
35	4.7	3.4	5.3	4.2	5.9	4.4	6.5	4.9	7.1	5.0	7.7	5.2	8.1	5.1	8.3	5.3
37	4.7	3.4	5.3	4.2	5.9	4.4	6.5	4.9	7.1	5.0	7.7	5.2	8.0	5.0	8.2	5.3
40	4.7	3.4	5.3	4.2	5.9	4.4	6.5	4.9	7.1	5.0	7.5	5.1	7.8	5.0	8.0	5.2
43	4.7	3.4	5.3	4.2	5.9	4.4	6.5	4.9	7.1	5.0	7.3	5.0	7.6	4.9	7.8	5.1
46	4.7	3.4	5.3	4.2	5.9	4.4	6.5	4.9	7.0	5.0	7.1	4.9	7.4	4.8	7.5	5.0

2-14. Ceiling type

■ Model: AB∗A030GTEH

Outdoor temperature	Indoor temperature															
	20°CDB/15°CWB		23°CDB/16°CWB		24°CDB/17°CWB		26°CDB/18°CWB		27°CDB/19°CWB		28°CDB/20°CWB		30°CDB/22°CWB		32°CDB/23°CWB	
°CDB	TC	SHC	TC	SHC	TC	SHC	TC	SHC	TC	SHC	TC	SHC	TC	SHC	TC	SHC
10	5.9	4.9	6.7	6.1	7.5	6.3	8.2	7.0	9.0	7.1	9.7	7.3	11.3	7.5	12.1	8.1
15	5.9	4.9	6.7	6.1	7.5	6.3	8.2	7.0	9.0	7.1	9.7	7.3	11.3	7.5	12.1	8.1
21	5.9	4.9	6.7	6.1	7.5	6.3	8.2	7.0	9.0	7.1	9.7	7.3	11.3	7.5	11.7	8.0
23	5.9	4.9	6.7	6.1	7.5	6.3	8.2	7.0	9.0	7.1	9.7	7.3	11.3	7.5	11.5	7.9
25	5.9	4.9	6.7	6.1	7.5	6.3	8.2	7.0	9.0	7.1	9.7	7.3	11.2	7.5	11.4	7.9
27	5.9	4.9	6.7	6.1	7.5	6.3	8.2	7.0	9.0	7.1	9.7	7.3	11.0	7.4	11.2	7.8
30	5.9	4.9	6.7	6.1	7.5	6.3	8.2	7.0	9.0	7.1	9.7	7.3	10.8	7.3	11.0	7.7
33	5.9	4.9	6.7	6.1	7.5	6.3	8.2	7.0	9.0	7.1	9.7	7.3	10.5	7.3	10.7	7.6
35	5.9	4.9	6.7	6.1	7.5	6.3	8.2	7.0	9.0	7.1	9.7	7.3	10.3	7.2	10.5	7.6
37	5.9	4.9	6.7	6.1	7.5	6.3	8.2	7.0	9.0	7.1	9.7	7.3	10.2	7.1	10.4	7.5
40	5.9	4.9	6.7	6.1	7.5	6.3	8.2	7.0	9.0	7.1	9.5	7.2	9.9	7.0	10.1	7.4
43	5.9	4.9	6.7	6.1	7.5	6.3	8.2	7.0	9.0	7.1	9.3	7.1	9.6	7.0	9.8	7.4
46	5.9	4.9	6.7	6.1	7.5	6.3	8.2	7.0	8.8	7.1	9.0	7.0	9.4	6.9	9.5	7.3

■ Model: AB∗A036GTEH

Outdoor temperature	Indoor temperature															
	20°CDB/15°CWB		23°CDB/16°CWB		24°CDB/17°CWB		26°CDB/18°CWB		27°CDB/19°CWB		28°CDB/20°CWB		30°CDB/22°CWB		32°CDB/23°CWB	
°CDB	TC	SHC	TC	SHC	TC	SHC	TC	SHC	TC	SHC	TC	SHC	TC	SHC	TC	SHC
10	7.4	5.6	8.3	6.9	9.3	7.2	10.2	7.9	11.2	8.2	12.1	8.3	14.0	8.7	15.0	9.3
15	7.4	5.6	8.3	6.9	9.3	7.2	10.2	7.9	11.2	8.2	12.1	8.3	14.0	8.7	15.0	9.3
21	7.4	5.6	8.3	6.9	9.3	7.2	10.2	7.9	11.2	8.2	12.1	8.3	14.0	8.7	14.6	9.2
23	7.4	5.6	8.3	6.9	9.3	7.2	10.2	7.9	11.2	8.2	12.1	8.3	14.0	8.7	14.4	9.1
25	7.4	5.6	8.3	6.9	9.3	7.2	10.2	7.9	11.2	8.2	12.1	8.3	13.9	8.7	14.2	9.0
27	7.4	5.6	8.3	6.9	9.3	7.2	10.2	7.9	11.2	8.2	12.1	8.3	13.7	8.6	14.0	8.9
30	7.4	5.6	8.3	6.9	9.3	7.2	10.2	7.9	11.2	8.2	12.1	8.3	13.4	8.5	13.6	8.8
33	7.4	5.6	8.3	6.9	9.3	7.2	10.2	7.9	11.2	8.2	12.1	8.3	13.1	8.3	13.3	8.7
35	7.4	5.6	8.3	6.9	9.3	7.2	10.2	7.9	11.2	8.2	12.1	8.3	12.8	8.2	13.1	8.6
37	7.4	5.6	8.3	6.9	9.3	7.2	10.2	7.9	11.2	8.2	12.1	8.3	12.6	8.2	12.9	8.6
40	7.4	5.6	8.3	6.9	9.3	7.2	10.2	7.9	11.2	8.2	11.8	8.3	12.3	8.1	12.6	8.5
43	7.4	5.6	8.3	6.9	9.3	7.2	10.2	7.9	11.2	8.2	11.5	8.1	12.0	8.0	12.2	8.3
46	7.4	5.6	8.3	6.9	9.3	7.2	10.2	7.9	11.0	8.1	11.2	8.0	11.7	7.8	11.9	8.2

■ Model: AB∗A045GTEH

Outdoor temperature	Indoor temperature															
	20°CDB/15°CWB		23°CDB/16°CWB		24°CDB/17°CWB		26°CDB/18°CWB		27°CDB/19°CWB		28°CDB/20°CWB		30°CDB/22°CWB		32°CDB/23°CWB	
°CDB	TC	SHC	TC	SHC	TC	SHC	TC	SHC	TC	SHC	TC	SHC	TC	SHC	TC	SHC
10	8.2	6.4	9.3	7.9	10.4	8.2	11.4	9.1	12.5	9.4	13.5	9.6	15.7	10.0	16.7	10.7
15	8.2	6.4	9.3	7.9	10.4	8.2	11.4	9.1	12.5	9.4	13.5	9.6	15.7	10.0	16.7	10.7
21	8.2	6.4	9.3	7.9	10.4	8.2	11.4	9.1	12.5	9.4	13.5	9.6	15.7	10.0	16.3	10.6
23	8.2	6.4	9.3	7.9	10.4	8.2	11.4	9.1	12.5	9.4	13.5	9.6	15.7	10.0	16.0	10.4
25	8.2	6.4	9.3	7.9	10.4	8.2	11.4	9.1	12.5	9.4	13.5	9.6	15.5	9.9	15.8	10.3
27	8.2	6.4	9.3	7.9	10.4	8.2	11.4	9.1	12.5	9.4	13.5	9.6	15.3	9.8	15.6	10.3
30	8.2	6.4	9.3	7.9	10.4	8.2	11.4	9.1	12.5	9.4	13.5	9.6	15.0	9.7	15.2	10.1
33	8.2	6.4	9.3	7.9	10.4	8.2	11.4	9.1	12.5	9.4	13.5	9.6	14.6	9.6	14.9	10.0
35	8.2	6.4	9.3	7.9	10.4	8.2	11.4	9.1	12.5	9.4	13.5	9.6	14.3	9.4	14.6	9.9
37	8.2	6.4	9.3	7.9	10.4	8.2	11.4	9.1	12.5	9.4	13.5	9.6	14.1	9.4	14.4	9.8
40	8.2	6.4	9.3	7.9	10.4	8.2	11.4	9.1	12.5	9.4	13.2	9.5	13.8	9.3	14.0	9.7
43	8.2	6.4	9.3	7.9	10.4	8.2	11.4	9.1	12.5	9.4	12.9	9.3	13.4	9.1	13.7	9.6
46	8.2	6.4	9.3	7.9	10.4	8.2	11.4	9.1	12.3	9.3	12.5	9.2	13.0	9.0	13.3	9.5

■ Model: AB∗A054GTEH

Outdoor temperature	Indoor temperature															
	20°CDB/15°CWB		23°CDB/16°CWB		24°CDB/17°CWB		26°CDB/18°CWB		27°CDB/19°CWB		28°CDB/20°CWB		30°CDB/22°CWB		32°CDB/23°CWB	
°CDB	TC	SHC	TC	SHC	TC	SHC	TC	SHC	TC	SHC	TC	SHC	TC	SHC	TC	SHC
10	9.2	7.2	10.4	8.9	11.6	9.3	12.8	10.3	14.0	10.5	15.2	10.8	17.6	11.2	18.8	12.0
15	9.2	7.2	10.4	8.9	11.6	9.3	12.8	10.3	14.0	10.5	15.2	10.8	17.6	11.2	18.8	12.0
21	9.2	7.2	10.4	8.9	11.6	9.3	12.8	10.3	14.0	10.5	15.2	10.8	17.6	11.2	18.3	11.9
23	9.2	7.2	10.4	8.9	11.6	9.3	12.8	10.3	14.0	10.5	15.2	10.8	17.6	11.2	18.0	11.7
25	9.2	7.2	10.4	8.9	11.6	9.3	12.8	10.3	14.0	10.5	15.2	10.8	17.4	11.1	17.7	11.6
27	9.2	7.2	10.4	8.9	11.6	9.3	12.8	10.3	14.0	10.5	15.2	10.8	17.1	11.0	17.5	11.5
30	9.2	7.2	10.4	8.9	11.6	9.3	12.8	10.3	14.0	10.5	15.2	10.8	16.8	10.9	17.1	11.4
33	9.2	7.2	10.4	8.9	11.6	9.3	12.8	10.3	14.0	10.5	15.2	10.8	16.4	10.7	16.7	11.2
35	9.2	7.2	10.4	8.9	11.6	9.3	12.8	10.3	14.0	10.5	15.2	10.8	16.1	10.6	16.4	11.1
37	9.2	7.2	10.4	8.9	11.6	9.3	12.8	10.3	14.0	10.5	15.2	10.8	15.8	10.5	16.1	11.1
40	9.2	7.2	10.4	8.9	11.6	9.3	12.8	10.3	14.0	10.5	14.8	10.6	15.4	10.4	15.7	10.9
43	9.2	7.2	10.4	8.9	11.6	9.3	12.8	10.3	14.0	10.5	14.4	10.5	15.0	10.3	15.3	10.8
46	9.2	7.2	10.4	8.9	11.6	9.3	12.8	10.3	13.8	10.5	14.0	10.3	14.6	10.1	14.9	10.6

2-15. Wall mounted type

■ Model: AS∗A004GCGH

Outdoor temperature	Indoor temperature																	
	18°CDB/14°CWB		20°CDB/15°CWB		23°CDB/16°CWB		24°CDB/17°CWB		26°CDB/18°CWB		27°CDB/19°CWB		28°CDB/20°CWB		30°CDB/22°CWB		32°CDB/23°CWB	
°CDB	TC	SHC	TC	SHC	TC	SHC	TC	SHC	TC	SHC	TC	SHC	TC	SHC	TC	SHC	TC	SHC
-15	0.6	0.5	0.7	0.6	0.8	0.7	0.9	0.8	1.0	0.9	1.1	0.9	1.2	0.9	1.4	1.0	1.5	1.1
-10	0.6	0.5	0.7	0.6	0.8	0.7	0.9	0.8	1.0	0.9	1.1	0.9	1.2	0.9	1.4	1.0	1.5	1.1
-5	0.6	0.5	0.7	0.6	0.8	0.7	0.9	0.8	1.0	0.9	1.1	0.9	1.2	0.9	1.4	1.0	1.5	1.1
0	0.6	0.5	0.7	0.6	0.8	0.7	0.9	0.8	1.0	0.9	1.1	0.9	1.2	0.9	1.4	1.0	1.5	1.1
5	0.6	0.5	0.7	0.6	0.8	0.7	0.9	0.8	1.0	0.9	1.1	0.9	1.2	0.9	1.4	1.0	1.5	1.1
10	0.6	0.5	0.7	0.6	0.8	0.7	0.9	0.8	1.0	0.9	1.1	0.9	1.2	0.9	1.4	1.0	1.5	1.1
15	0.6	0.5	0.7	0.6	0.8	0.7	0.9	0.8	1.0	0.9	1.1	0.9	1.2	0.9	1.4	1.0	1.5	1.1
21	0.6	0.5	0.7	0.6	0.8	0.7	0.9	0.8	1.0	0.9	1.1	0.9	1.2	0.9	1.4	1.0	1.4	1.0
23	0.6	0.5	0.7	0.6	0.8	0.7	0.9	0.8	1.0	0.9	1.1	0.9	1.2	0.9	1.4	1.0	1.4	1.0
25	0.6	0.5	0.7	0.6	0.8	0.7	0.9	0.8	1.0	0.9	1.1	0.9	1.2	0.9	1.4	1.0	1.4	1.0
27	0.6	0.5	0.7	0.6	0.8	0.7	0.9	0.8	1.0	0.9	1.1	0.9	1.2	0.9	1.3	1.0	1.4	1.0
30	0.6	0.5	0.7	0.6	0.8	0.7	0.9	0.8	1.0	0.9	1.1	0.9	1.2	0.9	1.3	1.0	1.3	1.0
33	0.6	0.5	0.7	0.6	0.8	0.7	0.9	0.8	1.0	0.9	1.1	0.9	1.2	0.9	1.3	0.9	1.3	1.0
35	0.6	0.5	0.7	0.6	0.8	0.7	0.9	0.8	1.0	0.9	1.1	0.9	1.2	0.9	1.3	0.9	1.3	1.0
37	0.6	0.5	0.7	0.6	0.8	0.7	0.9	0.8	1.0	0.9	1.1	0.9	1.2	0.9	1.2	0.9	1.3	1.0
40	0.6	0.5	0.7	0.6	0.8	0.7	0.9	0.8	1.0	0.9	1.1	0.9	1.2	0.9	1.2	0.9	1.2	1.0
43	0.6	0.5	0.7	0.6	0.8	0.7	0.9	0.8	1.0	0.9	1.1	0.9	1.1	0.9	1.2	0.9	1.2	1.0
46	0.6	0.5	0.7	0.6	0.8	0.7	0.9	0.8	1.0	0.9	1.1	0.9	1.1	0.9	1.1	0.9	1.2	0.9

■ Model: AS∗A007GCGH

Outdoor temperature	Indoor temperature																	
	18°CDB/14°CWB		20°CDB/15°CWB		23°CDB/16°CWB		24°CDB/17°CWB		26°CDB/18°CWB		27°CDB/19°CWB		28°CDB/20°CWB		30°CDB/22°CWB		32°CDB/23°CWB	
°CDB	TC	SHC	TC	SHC	TC	SHC	TC	SHC	TC	SHC	TC	SHC	TC	SHC	TC	SHC	TC	SHC
-15	1.3	1.0	1.4	1.1	1.6	1.4	1.8	1.5	2.0	1.6	2.2	1.7	2.4	1.7	2.8	1.8	2.9	1.9
-10	1.3	1.0	1.4	1.1	1.6	1.4	1.8	1.5	2.0	1.6	2.2	1.7	2.4	1.7	2.8	1.8	2.9	1.9
-5	1.3	1.0	1.4	1.1	1.6	1.4	1.8	1.5	2.0	1.6	2.2	1.7	2.4	1.7	2.8	1.8	2.9	1.9
0	1.3	1.0	1.4	1.1	1.6	1.4	1.8	1.5	2.0	1.6	2.2	1.7	2.4	1.7	2.8	1.8	2.9	1.9
5	1.3	1.0	1.4	1.1	1.6	1.4	1.8	1.5	2.0	1.6	2.2	1.7	2.4	1.7	2.8	1.8	2.9	1.9
10	1.3	1.0	1.4	1.1	1.6	1.4	1.8	1.5	2.0	1.6	2.2	1.7	2.4	1.7	2.8	1.8	2.9	1.9
15	1.3	1.0	1.4	1.1	1.6	1.4	1.8	1.5	2.0	1.6	2.2	1.7	2.4	1.7	2.8	1.8	2.9	1.9
21	1.3	1.0	1.4	1.1	1.6	1.4	1.8	1.5	2.0	1.6	2.2	1.7	2.4	1.7	2.8	1.8	2.9	1.9
23	1.3	1.0	1.4	1.1	1.6	1.4	1.8	1.5	2.0	1.6	2.2	1.7	2.4	1.7	2.8	1.8	2.8	1.9
25	1.3	1.0	1.4	1.1	1.6	1.4	1.8	1.5	2.0	1.6	2.2	1.7	2.4	1.7	2.7	1.8	2.8	1.8
27	1.3	1.0	1.4	1.1	1.6	1.4	1.8	1.5	2.0	1.6	2.2	1.7	2.4	1.7	2.7	1.7	2.7	1.8
30	1.3	1.0	1.4	1.1	1.6	1.4	1.8	1.5	2.0	1.6	2.2	1.7	2.4	1.7	2.6	1.7	2.7	1.8
33	1.3	1.0	1.4	1.1	1.6	1.4	1.8	1.5	2.0	1.6	2.2	1.7	2.4	1.7	2.6	1.7	2.6	1.8
35	1.3	1.0	1.4	1.1	1.6	1.4	1.8	1.5	2.0	1.6	2.2	1.7	2.4	1.7	2.5	1.7	2.6	1.8
37	1.3	1.0	1.4	1.1	1.6	1.4	1.8	1.5	2.0	1.6	2.2	1.7	2.4	1.7	2.5	1.7	2.5	1.7
40	1.3	1.0	1.4	1.1	1.6	1.4	1.8	1.5	2.0	1.6	2.2	1.7	2.3	1.7	2.4	1.6	2.5	1.7
43	1.3	1.0	1.4	1.1	1.6	1.4	1.8	1.5	2.0	1.6	2.2	1.7	2.3	1.7	2.4	1.6	2.4	1.7
46	1.3	1.0	1.4	1.1	1.6	1.4	1.8	1.5	2.0	1.6	2.2	1.6	2.2	1.6	2.3	1.6	2.3	1.7

■ Model: AS∗A009GCGH

Outdoor temperature	Indoor temperature																	
	18°CDB/14°CWB		20°CDB/15°CWB		23°CDB/16°CWB		24°CDB/17°CWB		26°CDB/18°CWB		27°CDB/19°CWB		28°CDB/20°CWB		30°CDB/22°CWB		32°CDB/23°CWB	
°CDB	TC	SHC	TC	SHC	TC	SHC	TC	SHC	TC	SHC	TC	SHC	TC	SHC	TC	SHC	TC	SHC
-15	1.6	1.2	1.8	1.5	2.1	1.8	2.3	1.9	2.6	2.1	2.8	2.2	3.0	2.2	3.5	2.3	3.8	2.5
-10	1.6	1.2	1.8	1.5	2.1	1.8	2.3	1.9	2.6	2.1	2.8	2.2	3.0	2.2	3.5	2.3	3.8	2.5
-5	1.6	1.2	1.8	1.5	2.1	1.8	2.3	1.9	2.6	2.1	2.8	2.2	3.0	2.2	3.5	2.3	3.8	2.5
0	1.6	1.2	1.8	1.5	2.1	1.8	2.3	1.9	2.6	2.1	2.8	2.2	3.0	2.2	3.5	2.3	3.8	2.5
5	1.6	1.2	1.8	1.5	2.1	1.8	2.3	1.9	2.6	2.1	2.8	2.2	3.0	2.2	3.5	2.3	3.8	2.5
10	1.6	1.2	1.8	1.5	2.1	1.8	2.3	1.9	2.6	2.1	2.8	2.2	3.0	2.2	3.5	2.3	3.8	2.5
15	1.6	1.2	1.8	1.5	2.1	1.8	2.3	1.9	2.6	2.1	2.8	2.2	3.0	2.2	3.5	2.3	3.8	2.5
21	1.6	1.2	1.8	1.5	2.1	1.8	2.3	1.9	2.6	2.1	2.8	2.2	3.0	2.2	3.5	2.3	3.7	2.4
23	1.6	1.2	1.8	1.5	2.1	1.8	2.3	1.9	2.6	2.1	2.8	2.2	3.0	2.2	3.5	2.3	3.6	2.4
25	1.6	1.2	1.8	1.5	2.1	1.8	2.3	1.9	2.6	2.1	2.8	2.2	3.0	2.2	3.5	2.3	3.5	2.4
27	1.6	1.2	1.8	1.5	2.1	1.8	2.3	1.9	2.6	2.1	2.8	2.2	3.0	2.2	3.4	2.2	3.5	2.4
30	1.6	1.2	1.8	1.5	2.1	1.8	2.3	1.9	2.6	2.1	2.8	2.2	3.0	2.2	3.4	2.2	3.4	2.3
33	1.6	1.2	1.8	1.5	2.1	1.8	2.3	1.9	2.6	2.1	2.8	2.2	3.0	2.2	3.3	2.2	3.3	2.3
35	1.6	1.2	1.8	1.5	2.1	1.8	2.3	1.9	2.6	2.1	2.8	2.2	3.0	2.2	3.2	2.2	3.3	2.3
37	1.6	1.2	1.8	1.5	2.1	1.8	2.3	1.9	2.6	2.1	2.8	2.2	3.0	2.2	3.2	2.2	3.2	2.3
40	1.6	1.2	1.8	1.5	2.1	1.8	2.3	1.9	2.6	2.1	2.8	2.2	3.0	2.2	3.1	2.1	3.1	2.2
43	1.6	1.2	1.8	1.5	2.1	1.8	2.3	1.9	2.6	2.1	2.8	2.2	2.9	2.1	3.0	2.1	3.1	2.2
46	1.6	1.2	1.8	1.5	2.1	1.8	2.3	1.9	2.6	2.1	2.8	2.1	2.8	2.1	2.9	2.1	3.0	2.2

■ Model: AS∗A012GCGH

Outdoor temperature	Indoor temperature																	
	18°CDB/14°CWB		20°CDB/15°CWB		23°CDB/16°CWB		24°CDB/17°CWB		26°CDB/18°CWB		27°CDB/19°CWB		28°CDB/20°CWB		30°CDB/22°CWB		32°CDB/23°CWB	
°CDB	TC	SHC	TC	SHC	TC	SHC	TC	SHC	TC	SHC	TC	SHC	TC	SHC	TC	SHC	TC	SHC
-15	2.1	1.6	2.4	1.9	2.7	2.3	3.0	2.4	3.3	2.7	3.6	2.8	3.9	2.8	4.5	2.9	4.8	3.1
-10	2.1	1.6	2.4	1.9	2.7	2.3	3.0	2.4	3.3	2.7	3.6	2.8	3.9	2.8	4.5	2.9	4.8	3.1
-5	2.1	1.6	2.4	1.9	2.7	2.3	3.0	2.4	3.3	2.7	3.6	2.8	3.9	2.8	4.5	2.9	4.8	3.1
0	2.1	1.6	2.4	1.9	2.7	2.3	3.0	2.4	3.3	2.7	3.6	2.8	3.9	2.8	4.5	2.9	4.8	3.1
5	2.1	1.6	2.4	1.9	2.7	2.3	3.0	2.4	3.3	2.7	3.6	2.8	3.9	2.8	4.5	2.9	4.8	3.1
10	2.1	1.6	2.4	1.9	2.7	2.3	3.0	2.4	3.3	2.7	3.6	2.8	3.9	2.8	4.5	2.9	4.8	3.1
15	2.1	1.6	2.4	1.9	2.7	2.3	3.0	2.4	3.3	2.7	3.6	2.8	3.9	2.8	4.5	2.9	4.8	3.1
21	2.1	1.6	2.4	1.9	2.7	2.3	3.0	2.4	3.3	2.7	3.6	2.8	3.9	2.8	4.5	2.9	4.7	3.1
23	2.1	1.6	2.4	1.9	2.7	2.3	3.0	2.4	3.3	2.7	3.6	2.8	3.9	2.8	4.5	2.9	4.6	3.1
25	2.1	1.6	2.4	1.9	2.7	2.3	3.0	2.4	3.3	2.7	3.6	2.8	3.9	2.8	4.5	2.9	4.6	3.0
27	2.1	1.6	2.4	1.9	2.7	2.3	3.0	2.4	3.3	2.7	3.6	2.8	3.9	2.8	4.4	2.9	4.5	3.0
30	2.1	1.6	2.4	1.9	2.7	2.3	3.0	2.4	3.3	2.7	3.6	2.8	3.9	2.8	4.3	2.8	4.4	3.0
33	2.1	1.6	2.4	1.9	2.7	2.3	3.0	2.4	3.3	2.7	3.6	2.8	3.9	2.8	4.2	2.8	4.3	2.9
35	2.1	1.6	2.4	1.9	2.7	2.3	3.0	2.4	3.3	2.7	3.6	2.8	3.9	2.8	4.1	2.8	4.2	2.9
37	2.1	1.6	2.4	1.9	2.7	2.3	3.0	2.4	3.3	2.7	3.6	2.8	3.9	2.8	4.1	2.8	4.1	2.9
40	2.1	1.6	2.4	1.9	2.7	2.3	3.0	2.4	3.3	2.7	3.6	2.8	3.8	2.8	4.0	2.7	4.0	2.9
43	2.1	1.6	2.4	1.9	2.7	2.3	3.0	2.4	3.3	2.7	3.6	2.8	3.7	2.7	3.9	2.7	3.9	2.8
46	2.1	1.6	2.4	1.9	2.7	2.3	3.0	2.4	3.3	2.7	3.5	2.7	3.6	2.7	3.8	2.6	3.8	2.8

■ Model: AS∗A014GCGH

Outdoor temperature	Indoor temperature																	
	18°CDB/14°CWB		20°CDB/15°CWB		23°CDB/16°CWB		24°CDB/17°CWB		26°CDB/18°CWB		27°CDB/19°CWB		28°CDB/20°CWB		30°CDB/22°CWB		32°CDB/23°CWB	
°CDB	TC	SHC	TC	SHC	TC	SHC	TC	SHC	TC	SHC	TC	SHC	TC	SHC	TC	SHC	TC	SHC
-15	2.3	1.8	2.6	2.2	3.0	2.7	3.3	2.8	3.7	3.1	4.0	3.2	4.3	3.2	5.0	3.3	5.4	3.6
-10	2.3	1.8	2.6	2.2	3.0	2.7	3.3	2.8	3.7	3.1	4.0	3.2	4.3	3.2	5.0	3.3	5.4	3.6
-5	2.3	1.8	2.6	2.2	3.0	2.7	3.3	2.8	3.7	3.1	4.0	3.2	4.3	3.2	5.0	3.3	5.4	3.6
0	2.3	1.8	2.6	2.2	3.0	2.7	3.3	2.8	3.7	3.1	4.0	3.2	4.3	3.2	5.0	3.3	5.4	3.6
5	2.3	1.8	2.6	2.2	3.0	2.7	3.3	2.8	3.7	3.1	4.0	3.2	4.3	3.2	5.0	3.3	5.4	3.6
10	2.3	1.8	2.6	2.2	3.0	2.7	3.3	2.8	3.7	3.1	4.0	3.2	4.3	3.2	5.0	3.3	5.4	3.6
15	2.3	1.8	2.6	2.2	3.0	2.7	3.3	2.8	3.7	3.1	4.0	3.2	4.3	3.2	5.0	3.3	5.4	3.6
21	2.3	1.8	2.6	2.2	3.0	2.7	3.3	2.8	3.7	3.1	4.0	3.2	4.3	3.2	5.0	3.3	5.2	3.5
23	2.3	1.8	2.6	2.2	3.0	2.7	3.3	2.8	3.7	3.1	4.0	3.2	4.3	3.2	5.0	3.3	5.1	3.5
25	2.3	1.8	2.6	2.2	3.0	2.7	3.3	2.8	3.7	3.1	4.0	3.2	4.3	3.2	5.0	3.3	5.1	3.5
27	2.3	1.8	2.6	2.2	3.0	2.7	3.3	2.8	3.7	3.1	4.0	3.2	4.3	3.2	4.9	3.3	5.0	3.5
30	2.3	1.8	2.6	2.2	3.0	2.7	3.3	2.8	3.7	3.1	4.0	3.2	4.3	3.2	4.8	3.3	4.9	3.4
33	2.3	1.8	2.6	2.2	3.0	2.7	3.3	2.8	3.7	3.1	4.0	3.2	4.3	3.2	4.7	3.2	4.8	3.4
35	2.3	1.8	2.6	2.2	3.0	2.7	3.3	2.8	3.7	3.1	4.0	3.2	4.3	3.2	4.6	3.2	4.7	3.4
37	2.3	1.8	2.6	2.2	3.0	2.7	3.3	2.8	3.7	3.1	4.0	3.2	4.3	3.2	4.5	3.2	4.6	3.3
40	2.3	1.8	2.6	2.2	3.0	2.7	3.3	2.8	3.7	3.1	4.0	3.2	4.2	3.2	4.4	3.1	4.5	3.3
43	2.3	1.8	2.6	2.2	3.0	2.7	3.3	2.8	3.7	3.1	4.0	3.2	4.1	3.1	4.3	3.1	4.4	3.3
46	2.3	1.8	2.6	2.2	3.0	2.7	3.3	2.8	3.7	3.1	3.9	3.1	4.0	3.1	4.2	3.0	4.2	3.2

■ Model: AS∗A18GBCH

Outdoor temperature	Indoor temperature																	
	18°CDB/14°CWB		20°CDB/15°CWB		23°CDB/16°CWB		24°CDB/17°CWB		26°CDB/18°CWB		27°CDB/19°CWB		28°CDB/20°CWB		30°CDB/22°CWB		32°CDB/23°CWB	
°CDB	TC	SHC	TC	SHC	TC	SHC	TC	SHC	TC	SHC	TC	SHC	TC	SHC	TC	SHC	TC	SHC
-15	3.2	2.4	3.7	2.9	4.2	3.5	4.6	3.7	5.1	4.1	5.6	4.2	6.1	4.3	7.0	4.4	7.5	4.8
-10	3.2	2.4	3.7	2.9	4.2	3.5	4.6	3.7	5.1	4.1	5.6	4.2	6.1	4.3	7.0	4.4	7.5	4.8
-5	3.2	2.4	3.7	2.9	4.2	3.5	4.6	3.7	5.1	4.1	5.6	4.2	6.1	4.3	7.0	4.4	7.5	4.8
0	3.2	2.4	3.7	2.9	4.2	3.5	4.6	3.7	5.1	4.1	5.6	4.2	6.1	4.3	7.0	4.4	7.5	4.8
5	3.2	2.4	3.7	2.9	4.2	3.5	4.6	3.7	5.1	4.1	5.6	4.2	6.1	4.3	7.0	4.4	7.5	4.8
10	3.2	2.4	3.7	2.9	4.2	3.5	4.6	3.7	5.1	4.1	5.6	4.2	6.1	4.3	7.0	4.4	7.5	4.8
15	3.2	2.4	3.7	2.9	4.2	3.5	4.6	3.7	5.1	4.1	5.6	4.2	6.1	4.3	7.0	4.4	7.5	4.8
21	3.2	2.4	3.7	2.9	4.2	3.5	4.6	3.7	5.1	4.1	5.6	4.2	6.1	4.3	7.0	4.4	7.3	4.7
23	3.2	2.4	3.7	2.9	4.2	3.5	4.6	3.7	5.1	4.1	5.6	4.2	6.1	4.3	7.0	4.4	7.2	4.6
25	3.2	2.4	3.7	2.9	4.2	3.5	4.6	3.7	5.1	4.1	5.6	4.2	6.1	4.3	7.0	4.4	7.1	4.6
27	3.2	2.4	3.7	2.9	4.2	3.5	4.6	3.7	5.1	4.1	5.6	4.2	6.1	4.3	6.8	4.4	7.0	4.6
30	3.2	2.4	3.7	2.9	4.2	3.5	4.6	3.7	5.1	4.1	5.6	4.2	6.1	4.3	6.7	4.3	6.8	4.5
33	3.2	2.4	3.7	2.9	4.2	3.5	4.6	3.7	5.1	4.1	5.6	4.2	6.1	4.3	6.5	4.3	6.7	4.5
35	3.2	2.4	3.7	2.9	4.2	3.5	4.6	3.7	5.1	4.1	5.6	4.2	6.1	4.3	6.4	4.2	6.5	4.4
37	3.2	2.4	3.7	2.9	4.2	3.5	4.6	3.7	5.1	4.1	5.6	4.2	6.1	4.3	6.3	4.2	6.4	4.4
40	3.2	2.4	3.7	2.9	4.2	3.5	4.6	3.7	5.1	4.1	5.6	4.2	5.9	4.2	6.2	4.1	6.3	4.3
43	3.2	2.4	3.7	2.9	4.2	3.5	4.6	3.7	5.1	4.1	5.6	4.2	5.8	4.1	6.0	4.0	6.1	4.3
46	3.2	2.4	3.7	2.9	4.2	3.5	4.6	3.7	5.1	4.1	5.5	4.1	5.6	4.1	5.8	4.0	5.9	4.2

■ Model: AS∗A24GBCH

Outdoor temperature	Indoor temperature																	
	18°CDB/14°CWB		20°CDB/15°CWB		23°CDB/16°CWB		24°CDB/17°CWB		26°CDB/18°CWB		27°CDB/19°CWB		28°CDB/20°CWB		30°CDB/22°CWB		32°CDB/23°CWB	
°CDB	TC	SHC	TC	SHC	TC	SHC	TC	SHC	TC	SHC	TC	SHC	TC	SHC	TC	SHC	TC	SHC
-15	4.1	3.1	4.7	3.7	5.3	4.6	5.9	4.7	6.5	5.2	7.1	5.4	7.7	5.5	8.9	5.7	9.5	6.1
-10	4.1	3.1	4.7	3.7	5.3	4.6	5.9	4.7	6.5	5.2	7.1	5.4	7.7	5.5	8.9	5.7	9.5	6.1
-5	4.1	3.1	4.7	3.7	5.3	4.6	5.9	4.7	6.5	5.2	7.1	5.4	7.7	5.5	8.9	5.7	9.5	6.1
0	4.1	3.1	4.7	3.7	5.3	4.6	5.9	4.7	6.5	5.2	7.1	5.4	7.7	5.5	8.9	5.7	9.5	6.1
5	4.1	3.1	4.7	3.7	5.3	4.6	5.9	4.7	6.5	5.2	7.1	5.4	7.7	5.5	8.9	5.7	9.5	6.1
10	4.1	3.1	4.7	3.7	5.3	4.6	5.9	4.7	6.5	5.2	7.1	5.4	7.7	5.5	8.9	5.7	9.5	6.1
15	4.1	3.1	4.7	3.7	5.3	4.6	5.9	4.7	6.5	5.2	7.1	5.4	7.7	5.5	8.9	5.7	9.5	6.1
21	4.1	3.1	4.7	3.7	5.3	4.6	5.9	4.7	6.5	5.2	7.1	5.4	7.7	5.5	8.9	5.7	9.3	6.0
23	4.1	3.1	4.7	3.7	5.3	4.6	5.9	4.7	6.5	5.2	7.1	5.4	7.7	5.5	8.9	5.7	9.1	6.0
25	4.1	3.1	4.7	3.7	5.3	4.6	5.9	4.7	6.5	5.2	7.1	5.4	7.7	5.5	8.8	5.7	9.0	5.9
27	4.1	3.1	4.7	3.7	5.3	4.6	5.9	4.7	6.5	5.2	7.1	5.4	7.7	5.5	8.7	5.6	8.8	5.9
30	4.1	3.1	4.7	3.7	5.3	4.6	5.9	4.7	6.5	5.2	7.1	5.4	7.7	5.5	8.5	5.5	8.6	5.8
33	4.1	3.1	4.7	3.7	5.3	4.6	5.9	4.7	6.5	5.2	7.1	5.4	7.7	5.5	8.3	5.5	8.4	5.7
35	4.1	3.1	4.7	3.7	5.3	4.6	5.9	4.7	6.5	5.2	7.1	5.4	7.7	5.5	8.1	5.4	8.3	5.7
37	4.1	3.1	4.7	3.7	5.3	4.6	5.9	4.7	6.5	5.2	7.1	5.4	7.7	5.5	8.0	5.4	8.2	5.6
40	4.1	3.1	4.7	3.7	5.3	4.6	5.9	4.7	6.5	5.2	7.1	5.4	7.5	5.4	7.8	5.3	8.0	5.6
43	4.1	3.1	4.7	3.7	5.3	4.6	5.9	4.7	6.5	5.2	7.1	5.4	7.3	5.3	7.6	5.2	7.8	5.5
46	4.1	3.1	4.7	3.7	5.3	4.6	5.9	4.7	6.5	5.2	7.0	5.3	7.1	5.3	7.4	5.2	7.5	5.4

■ Model: AS∗A030GTEH

Outdoor temperature	Indoor temperature																	
	18°CDB/14°CWB		20°CDB/15°CWB		23°CDB/16°CWB		24°CDB/17°CWB		26°CDB/18°CWB		27°CDB/19°CWB		28°CDB/20°CWB		30°CDB/22°CWB		32°CDB/23°CWB	
°CDB	TC	SHC	TC	SHC	TC	SHC	TC	SHC	TC	SHC	TC	SHC	TC	SHC	TC	SHC	TC	SHC
-15	5.2	3.9	5.9	4.6	6.7	5.7	7.5	5.9	8.2	6.6	9.0	6.7	9.7	6.9	11.3	7.2	12.1	7.7
-10	5.2	3.9	5.9	4.6	6.7	5.7	7.5	5.9	8.2	6.6	9.0	6.7	9.7	6.9	11.3	7.2	12.1	7.7
-5	5.2	3.9	5.9	4.6	6.7	5.7	7.5	5.9	8.2	6.6	9.0	6.7	9.7	6.9	11.3	7.2	12.1	7.7
0	5.2	3.9	5.9	4.6	6.7	5.7	7.5	5.9	8.2	6.6	9.0	6.7	9.7	6.9	11.3	7.2	12.1	7.7
5	5.2	3.9	5.9	4.6	6.7	5.7	7.5	5.9	8.2	6.6	9.0	6.7	9.7	6.9	11.3	7.2	12.1	7.7
10	5.2	3.9	5.9	4.6	6.7	5.7	7.5	5.9	8.2	6.6	9.0	6.7	9.7	6.9	11.3	7.2	12.1	7.7
15	5.2	3.9	5.9	4.6	6.7	5.7	7.5	5.9	8.2	6.6	9.0	6.7	9.7	6.9	11.3	7.2	12.1	7.7
21	5.2	3.9	5.9	4.6	6.7	5.7	7.5	5.9	8.2	6.6	9.0	6.7	9.7	6.9	11.3	7.2	11.7	7.6
23	5.2	3.9	5.9	4.6	6.7	5.7	7.5	5.9	8.2	6.6	9.0	6.7	9.7	6.9	11.3	7.2	11.5	7.5
25	5.2	3.9	5.9	4.6	6.7	5.7	7.5	5.9	8.2	6.6	9.0	6.7	9.7	6.9	11.2	7.1	11.4	7.4
27	5.2	3.9	5.9	4.6	6.7	5.7	7.5	5.9	8.2	6.6	9.0	6.7	9.7	6.9	11.0	7.0	11.2	7.4
30	5.2	3.9	5.9	4.6	6.7	5.7	7.5	5.9	8.2	6.6	9.0	6.7	9.7	6.9	10.8	7.0	11.0	7.3
33	5.2	3.9	5.9	4.6	6.7	5.7	7.5	5.9	8.2	6.6	9.0	6.7	9.7	6.9	10.5	6.9	10.7	7.2
35	5.2	3.9	5.9	4.6	6.7	5.7	7.5	5.9	8.2	6.6	9.0	6.7	9.7	6.9	10.3	6.8	10.5	7.1
37	5.2	3.9	5.9	4.6	6.7	5.7	7.5	5.9	8.2	6.6	9.0	6.7	9.7	6.9	10.2	6.7	10.4	7.1
40	5.2	3.9	5.9	4.6	6.7	5.7	7.5	5.9	8.2	6.6	9.0	6.7	9.5	6.8	9.9	6.6	10.1	7.0
43	5.2	3.9	5.9	4.6	6.7	5.7	7.5	5.9	8.2	6.6	9.0	6.7	9.3	6.7	9.6	6.5	9.8	6.9
46	5.2	3.9	5.9	4.6	6.7	5.7	7.5	5.9	8.2	6.6	8.8	6.7	9.0	6.6	9.4	6.4	9.5	6.8

■ Model: AS∗A034GTEH

Outdoor temperature	Indoor temperature																	
	18°CDB/14°CWB		20°CDB/15°CWB		23°CDB/16°CWB		24°CDB/17°CWB		26°CDB/18°CWB		27°CDB/19°CWB		28°CDB/20°CWB		30°CDB/22°CWB		32°CDB/23°CWB	
°CDB	TC	SHC	TC	SHC	TC	SHC	TC	SHC	TC	SHC	TC	SHC	TC	SHC	TC	SHC	TC	SHC
-15	5.7	4.4	6.6	5.2	7.4	6.5	8.3	6.7	9.1	7.4	10.0	7.6	10.8	7.8	12.5	8.1	13.4	8.7
-10	5.7	4.4	6.6	5.2	7.4	6.5	8.3	6.7	9.1	7.4	10.0	7.6	10.8	7.8	12.5	8.1	13.4	8.7
-5	5.7	4.4	6.6	5.2	7.4	6.5	8.3	6.7	9.1	7.4	10.0	7.6	10.8	7.8	12.5	8.1	13.4	8.7
0	5.7	4.4	6.6	5.2	7.4	6.5	8.3	6.7	9.1	7.4	10.0	7.6	10.8	7.8	12.5	8.1	13.4	8.7
5	5.7	4.4	6.6	5.2	7.4	6.5	8.3	6.7	9.1	7.4	10.0	7.6	10.8	7.8	12.5	8.1	13.4	8.7
10	5.7	4.4	6.6	5.2	7.4	6.5	8.3	6.7	9.1	7.4	10.0	7.6	10.8	7.8	12.5	8.1	13.4	8.7
15	5.7	4.4	6.6	5.2	7.4	6.5	8.3	6.7	9.1	7.4	10.0	7.6	10.8	7.8	12.5	8.1	13.4	8.7
21	5.7	4.4	6.6	5.2	7.4	6.5	8.3	6.7	9.1	7.4	10.0	7.6	10.8	7.8	12.5	8.1	13.0	8.5
23	5.7	4.4	6.6	5.2	7.4	6.5	8.3	6.7	9.1	7.4	10.0	7.6	10.8	7.8	12.5	8.1	12.8	8.5
25	5.7	4.4	6.6	5.2	7.4	6.5	8.3	6.7	9.1	7.4	10.0	7.6	10.8	7.8	12.4	8.0	12.6	8.4
27	5.7	4.4	6.6	5.2	7.4	6.5	8.3	6.7	9.1	7.4	10.0	7.6	10.8	7.8	12.2	7.9	12.5	8.3
30	5.7	4.4	6.6	5.2	7.4	6.5	8.3	6.7	9.1	7.4	10.0	7.6	10.8	7.8	12.0	7.8	12.2	8.2
33	5.7	4.4	6.6	5.2	7.4	6.5	8.3	6.7	9.1	7.4	10.0	7.6	10.8	7.8	11.7	7.7	11.9	8.1
35	5.7	4.4	6.6	5.2	7.4	6.5	8.3	6.7	9.1	7.4	10.0	7.6	10.8	7.8	11.5	7.7	11.7	8.0
37	5.7	4.4	6.6	5.2	7.4	6.5	8.3	6.7	9.1	7.4	10.0	7.6	10.8	7.8	11.3	7.6	11.5	8.0
40	5.7	4.4	6.6	5.2	7.4	6.5	8.3	6.7	9.1	7.4	10.0	7.6	10.6	7.7	11.0	7.5	11.2	7.9
43	5.7	4.4	6.6	5.2	7.4	6.5	8.3	6.7	9.1	7.4	10.0	7.6	10.3	7.5	10.7	7.4	10.9	7.8
46	5.7	4.4	6.6	5.2	7.4	6.5	8.3	6.7	9.1	7.4	9.8	7.5	10.0	7.4	10.4	7.3	10.6	7.7

2-16. Wall mounted type (EEV external type model)

■ Model: AS∗E004GCEH

Outdoor temperature	Indoor temperature																	
	18°CDB/14°CWB		20°CDB/15°CWB		23°CDB/16°CWB		24°CDB/17°CWB		26°CDB/18°CWB		27°CDB/19°CWB		28°CDB/20°CWB		30°CDB/22°CWB		32°CDB/23°CWB	
°CDB	TC	SHC	TC	SHC	TC	SHC	TC	SHC	TC	SHC	TC	SHC	TC	SHC	TC	SHC	TC	SHC
-15	0.6	0.5	0.7	0.6	0.8	0.7	0.9	0.8	1.0	0.9	1.1	0.9	1.2	0.9	1.4	1.0	1.5	1.1
-10	0.6	0.5	0.7	0.6	0.8	0.7	0.9	0.8	1.0	0.9	1.1	0.9	1.2	0.9	1.4	1.0	1.5	1.1
-5	0.6	0.5	0.7	0.6	0.8	0.7	0.9	0.8	1.0	0.9	1.1	0.9	1.2	0.9	1.4	1.0	1.5	1.1
0	0.6	0.5	0.7	0.6	0.8	0.7	0.9	0.8	1.0	0.9	1.1	0.9	1.2	0.9	1.4	1.0	1.5	1.1
5	0.6	0.5	0.7	0.6	0.8	0.7	0.9	0.8	1.0	0.9	1.1	0.9	1.2	0.9	1.4	1.0	1.5	1.1
10	0.6	0.5	0.7	0.6	0.8	0.7	0.9	0.8	1.0	0.9	1.1	0.9	1.2	0.9	1.4	1.0	1.5	1.1
15	0.6	0.5	0.7	0.6	0.8	0.7	0.9	0.8	1.0	0.9	1.1	0.9	1.2	0.9	1.4	1.0	1.5	1.1
21	0.6	0.5	0.7	0.6	0.8	0.7	0.9	0.8	1.0	0.9	1.1	0.9	1.2	0.9	1.4	1.0	1.4	1.0
23	0.6	0.5	0.7	0.6	0.8	0.7	0.9	0.8	1.0	0.9	1.1	0.9	1.2	0.9	1.4	1.0	1.4	1.0
25	0.6	0.5	0.7	0.6	0.8	0.7	0.9	0.8	1.0	0.9	1.1	0.9	1.2	0.9	1.4	1.0	1.4	1.0
27	0.6	0.5	0.7	0.6	0.8	0.7	0.9	0.8	1.0	0.9	1.1	0.9	1.2	0.9	1.3	1.0	1.4	1.0
30	0.6	0.5	0.7	0.6	0.8	0.7	0.9	0.8	1.0	0.9	1.1	0.9	1.2	0.9	1.3	1.0	1.3	1.0
33	0.6	0.5	0.7	0.6	0.8	0.7	0.9	0.8	1.0	0.9	1.1	0.9	1.2	0.9	1.3	0.9	1.3	1.0
35	0.6	0.5	0.7	0.6	0.8	0.7	0.9	0.8	1.0	0.9	1.1	0.9	1.2	0.9	1.3	0.9	1.3	1.0
37	0.6	0.5	0.7	0.6	0.8	0.7	0.9	0.8	1.0	0.9	1.1	0.9	1.2	0.9	1.2	0.9	1.3	1.0
40	0.6	0.5	0.7	0.6	0.8	0.7	0.9	0.8	1.0	0.9	1.1	0.9	1.2	0.9	1.2	0.9	1.2	1.0
43	0.6	0.5	0.7	0.6	0.8	0.7	0.9	0.8	1.0	0.9	1.1	0.9	1.1	0.9	1.2	0.9	1.2	1.0
46	0.6	0.5	0.7	0.6	0.8	0.7	0.9	0.8	1.0	0.9	1.1	0.9	1.1	0.9	1.1	0.9	1.2	0.9

■ Model: AS∗E007GCEH

Outdoor temperature	Indoor temperature																	
	18°CDB/14°CWB		20°CDB/15°CWB		23°CDB/16°CWB		24°CDB/17°CWB		26°CDB/18°CWB		27°CDB/19°CWB		28°CDB/20°CWB		30°CDB/22°CWB		32°CDB/23°CWB	
°CDB	TC	SHC	TC	SHC	TC	SHC	TC	SHC	TC	SHC	TC	SHC	TC	SHC	TC	SHC	TC	SHC
-15	1.3	1.0	1.4	1.1	1.6	1.4	1.8	1.5	2.0	1.6	2.2	1.7	2.4	1.7	2.8	1.8	2.9	1.9
-10	1.3	1.0	1.4	1.1	1.6	1.4	1.8	1.5	2.0	1.6	2.2	1.7	2.4	1.7	2.8	1.8	2.9	1.9
-5	1.3	1.0	1.4	1.1	1.6	1.4	1.8	1.5	2.0	1.6	2.2	1.7	2.4	1.7	2.8	1.8	2.9	1.9
0	1.3	1.0	1.4	1.1	1.6	1.4	1.8	1.5	2.0	1.6	2.2	1.7	2.4	1.7	2.8	1.8	2.9	1.9
5	1.3	1.0	1.4	1.1	1.6	1.4	1.8	1.5	2.0	1.6	2.2	1.7	2.4	1.7	2.8	1.8	2.9	1.9
10	1.3	1.0	1.4	1.1	1.6	1.4	1.8	1.5	2.0	1.6	2.2	1.7	2.4	1.7	2.8	1.8	2.9	1.9
15	1.3	1.0	1.4	1.1	1.6	1.4	1.8	1.5	2.0	1.6	2.2	1.7	2.4	1.7	2.8	1.8	2.9	1.9
21	1.3	1.0	1.4	1.1	1.6	1.4	1.8	1.5	2.0	1.6	2.2	1.7	2.4	1.7	2.8	1.8	2.9	1.9
23	1.3	1.0	1.4	1.1	1.6	1.4	1.8	1.5	2.0	1.6	2.2	1.7	2.4	1.7	2.8	1.8	2.8	1.9
25	1.3	1.0	1.4	1.1	1.6	1.4	1.8	1.5	2.0	1.6	2.2	1.7	2.4	1.7	2.7	1.8	2.8	1.8
27	1.3	1.0	1.4	1.1	1.6	1.4	1.8	1.5	2.0	1.6	2.2	1.7	2.4	1.7	2.7	1.7	2.7	1.8
30	1.3	1.0	1.4	1.1	1.6	1.4	1.8	1.5	2.0	1.6	2.2	1.7	2.4	1.7	2.6	1.7	2.7	1.8
33	1.3	1.0	1.4	1.1	1.6	1.4	1.8	1.5	2.0	1.6	2.2	1.7	2.4	1.7	2.6	1.7	2.6	1.8
35	1.3	1.0	1.4	1.1	1.6	1.4	1.8	1.5	2.0	1.6	2.2	1.7	2.4	1.7	2.5	1.7	2.6	1.8
37	1.3	1.0	1.4	1.1	1.6	1.4	1.8	1.5	2.0	1.6	2.2	1.7	2.4	1.7	2.5	1.7	2.5	1.7
40	1.3	1.0	1.4	1.1	1.6	1.4	1.8	1.5	2.0	1.6	2.2	1.7	2.3	1.7	2.4	1.6	2.5	1.7
43	1.3	1.0	1.4	1.1	1.6	1.4	1.8	1.5	2.0	1.6	2.2	1.7	2.3	1.7	2.4	1.6	2.4	1.7
46	1.3	1.0	1.4	1.1	1.6	1.4	1.8	1.5	2.0	1.6	2.2	1.6	2.2	1.6	2.3	1.6	2.3	1.7

■ Model: AS∗E009GCEH

Outdoor temperature	Indoor temperature																	
	18°CDB/14°CWB		20°CDB/15°CWB		23°CDB/16°CWB		24°CDB/17°CWB		26°CDB/18°CWB		27°CDB/19°CWB		28°CDB/20°CWB		30°CDB/22°CWB		32°CDB/23°CWB	
°CDB	TC	SHC	TC	SHC	TC	SHC	TC	SHC	TC	SHC	TC	SHC	TC	SHC	TC	SHC	TC	SHC
-15	1.6	1.2	1.8	1.5	2.1	1.8	2.3	1.9	2.6	2.1	2.8	2.2	3.0	2.2	3.5	2.3	3.8	2.5
-10	1.6	1.2	1.8	1.5	2.1	1.8	2.3	1.9	2.6	2.1	2.8	2.2	3.0	2.2	3.5	2.3	3.8	2.5
-5	1.6	1.2	1.8	1.5	2.1	1.8	2.3	1.9	2.6	2.1	2.8	2.2	3.0	2.2	3.5	2.3	3.8	2.5
0	1.6	1.2	1.8	1.5	2.1	1.8	2.3	1.9	2.6	2.1	2.8	2.2	3.0	2.2	3.5	2.3	3.8	2.5
5	1.6	1.2	1.8	1.5	2.1	1.8	2.3	1.9	2.6	2.1	2.8	2.2	3.0	2.2	3.5	2.3	3.8	2.5
10	1.6	1.2	1.8	1.5	2.1	1.8	2.3	1.9	2.6	2.1	2.8	2.2	3.0	2.2	3.5	2.3	3.8	2.5
15	1.6	1.2	1.8	1.5	2.1	1.8	2.3	1.9	2.6	2.1	2.8	2.2	3.0	2.2	3.5	2.3	3.8	2.5
21	1.6	1.2	1.8	1.5	2.1	1.8	2.3	1.9	2.6	2.1	2.8	2.2	3.0	2.2	3.5	2.3	3.7	2.4
23	1.6	1.2	1.8	1.5	2.1	1.8	2.3	1.9	2.6	2.1	2.8	2.2	3.0	2.2	3.5	2.3	3.6	2.4
25	1.6	1.2	1.8	1.5	2.1	1.8	2.3	1.9	2.6	2.1	2.8	2.2	3.0	2.2	3.5	2.3	3.5	2.4
27	1.6	1.2	1.8	1.5	2.1	1.8	2.3	1.9	2.6	2.1	2.8	2.2	3.0	2.2	3.4	2.2	3.5	2.4
30	1.6	1.2	1.8	1.5	2.1	1.8	2.3	1.9	2.6	2.1	2.8	2.2	3.0	2.2	3.4	2.2	3.4	2.3
33	1.6	1.2	1.8	1.5	2.1	1.8	2.3	1.9	2.6	2.1	2.8	2.2	3.0	2.2	3.3	2.2	3.3	2.3
35	1.6	1.2	1.8	1.5	2.1	1.8	2.3	1.9	2.6	2.1	2.8	2.2	3.0	2.2	3.2	2.2	3.3	2.3
37	1.6	1.2	1.8	1.5	2.1	1.8	2.3	1.9	2.6	2.1	2.8	2.2	3.0	2.2	3.2	2.2	3.2	2.3
40	1.6	1.2	1.8	1.5	2.1	1.8	2.3	1.9	2.6	2.1	2.8	2.2	3.0	2.2	3.1	2.1	3.1	2.2
43	1.6	1.2	1.8	1.5	2.1	1.8	2.3	1.9	2.6	2.1	2.8	2.2	2.9	2.1	3.0	2.1	3.1	2.2
46	1.6	1.2	1.8	1.5	2.1	1.8	2.3	1.9	2.6	2.1	2.8	2.1	2.8	2.1	2.9	2.1	3.0	2.2

■ Model: AS∗E012GCEH

Outdoor temperature	Indoor temperature																	
	18°CDB/14°CWB		20°CDB/15°CWB		23°CDB/16°CWB		24°CDB/17°CWB		26°CDB/18°CWB		27°CDB/19°CWB		28°CDB/20°CWB		30°CDB/22°CWB		32°CDB/23°CWB	
°CDB	TC	SHC	TC	SHC	TC	SHC	TC	SHC	TC	SHC	TC	SHC	TC	SHC	TC	SHC	TC	SHC
-15	2.1	1.6	2.4	1.9	2.7	2.3	3.0	2.4	3.3	2.7	3.6	2.8	3.9	2.8	4.5	2.9	4.8	3.1
-10	2.1	1.6	2.4	1.9	2.7	2.3	3.0	2.4	3.3	2.7	3.6	2.8	3.9	2.8	4.5	2.9	4.8	3.1
-5	2.1	1.6	2.4	1.9	2.7	2.3	3.0	2.4	3.3	2.7	3.6	2.8	3.9	2.8	4.5	2.9	4.8	3.1
0	2.1	1.6	2.4	1.9	2.7	2.3	3.0	2.4	3.3	2.7	3.6	2.8	3.9	2.8	4.5	2.9	4.8	3.1
5	2.1	1.6	2.4	1.9	2.7	2.3	3.0	2.4	3.3	2.7	3.6	2.8	3.9	2.8	4.5	2.9	4.8	3.1
10	2.1	1.6	2.4	1.9	2.7	2.3	3.0	2.4	3.3	2.7	3.6	2.8	3.9	2.8	4.5	2.9	4.8	3.1
15	2.1	1.6	2.4	1.9	2.7	2.3	3.0	2.4	3.3	2.7	3.6	2.8	3.9	2.8	4.5	2.9	4.8	3.1
21	2.1	1.6	2.4	1.9	2.7	2.3	3.0	2.4	3.3	2.7	3.6	2.8	3.9	2.8	4.5	2.9	4.7	3.1
23	2.1	1.6	2.4	1.9	2.7	2.3	3.0	2.4	3.3	2.7	3.6	2.8	3.9	2.8	4.5	2.9	4.6	3.1
25	2.1	1.6	2.4	1.9	2.7	2.3	3.0	2.4	3.3	2.7	3.6	2.8	3.9	2.8	4.5	2.9	4.6	3.0
27	2.1	1.6	2.4	1.9	2.7	2.3	3.0	2.4	3.3	2.7	3.6	2.8	3.9	2.8	4.4	2.9	4.5	3.0
30	2.1	1.6	2.4	1.9	2.7	2.3	3.0	2.4	3.3	2.7	3.6	2.8	3.9	2.8	4.3	2.8	4.4	3.0
33	2.1	1.6	2.4	1.9	2.7	2.3	3.0	2.4	3.3	2.7	3.6	2.8	3.9	2.8	4.2	2.8	4.3	2.9
35	2.1	1.6	2.4	1.9	2.7	2.3	3.0	2.4	3.3	2.7	3.6	2.8	3.9	2.8	4.1	2.8	4.2	2.9
37	2.1	1.6	2.4	1.9	2.7	2.3	3.0	2.4	3.3	2.7	3.6	2.8	3.9	2.8	4.1	2.8	4.1	2.9
40	2.1	1.6	2.4	1.9	2.7	2.3	3.0	2.4	3.3	2.7	3.6	2.8	3.8	2.8	4.0	2.7	4.0	2.9
43	2.1	1.6	2.4	1.9	2.7	2.3	3.0	2.4	3.3	2.7	3.6	2.8	3.7	2.7	3.9	2.7	3.9	2.8
46	2.1	1.6	2.4	1.9	2.7	2.3	3.0	2.4	3.3	2.7	3.5	2.7	3.6	2.7	3.8	2.6	3.8	2.8

■ Model: AS∗E014GCEH

Outdoor temperature	Indoor temperature																	
	18°CDB/14°CWB		20°CDB/15°CWB		23°CDB/16°CWB		24°CDB/17°CWB		26°CDB/18°CWB		27°CDB/19°CWB		28°CDB/20°CWB		30°CDB/22°CWB		32°CDB/23°CWB	
°CDB	TC	SHC	TC	SHC	TC	SHC	TC	SHC	TC	SHC	TC	SHC	TC	SHC	TC	SHC	TC	SHC
-15	2.3	1.8	2.6	2.2	3.0	2.7	3.3	2.8	3.7	3.1	4.0	3.2	4.3	3.2	5.0	3.3	5.4	3.6
-10	2.3	1.8	2.6	2.2	3.0	2.7	3.3	2.8	3.7	3.1	4.0	3.2	4.3	3.2	5.0	3.3	5.4	3.6
-5	2.3	1.8	2.6	2.2	3.0	2.7	3.3	2.8	3.7	3.1	4.0	3.2	4.3	3.2	5.0	3.3	5.4	3.6
0	2.3	1.8	2.6	2.2	3.0	2.7	3.3	2.8	3.7	3.1	4.0	3.2	4.3	3.2	5.0	3.3	5.4	3.6
5	2.3	1.8	2.6	2.2	3.0	2.7	3.3	2.8	3.7	3.1	4.0	3.2	4.3	3.2	5.0	3.3	5.4	3.6
10	2.3	1.8	2.6	2.2	3.0	2.7	3.3	2.8	3.7	3.1	4.0	3.2	4.3	3.2	5.0	3.3	5.4	3.6
15	2.3	1.8	2.6	2.2	3.0	2.7	3.3	2.8	3.7	3.1	4.0	3.2	4.3	3.2	5.0	3.3	5.4	3.6
21	2.3	1.8	2.6	2.2	3.0	2.7	3.3	2.8	3.7	3.1	4.0	3.2	4.3	3.2	5.0	3.3	5.2	3.5
23	2.3	1.8	2.6	2.2	3.0	2.7	3.3	2.8	3.7	3.1	4.0	3.2	4.3	3.2	5.0	3.3	5.1	3.5
25	2.3	1.8	2.6	2.2	3.0	2.7	3.3	2.8	3.7	3.1	4.0	3.2	4.3	3.2	5.0	3.3	5.1	3.5
27	2.3	1.8	2.6	2.2	3.0	2.7	3.3	2.8	3.7	3.1	4.0	3.2	4.3	3.2	4.9	3.3	5.0	3.5
30	2.3	1.8	2.6	2.2	3.0	2.7	3.3	2.8	3.7	3.1	4.0	3.2	4.3	3.2	4.8	3.3	4.9	3.4
33	2.3	1.8	2.6	2.2	3.0	2.7	3.3	2.8	3.7	3.1	4.0	3.2	4.3	3.2	4.7	3.2	4.8	3.4
35	2.3	1.8	2.6	2.2	3.0	2.7	3.3	2.8	3.7	3.1	4.0	3.2	4.3	3.2	4.6	3.2	4.7	3.4
37	2.3	1.8	2.6	2.2	3.0	2.7	3.3	2.8	3.7	3.1	4.0	3.2	4.3	3.2	4.5	3.2	4.6	3.3
40	2.3	1.8	2.6	2.2	3.0	2.7	3.3	2.8	3.7	3.1	4.0	3.2	4.2	3.2	4.4	3.1	4.5	3.3
43	2.3	1.8	2.6	2.2	3.0	2.7	3.3	2.8	3.7	3.1	4.0	3.2	4.1	3.1	4.3	3.1	4.4	3.3
46	2.3	1.8	2.6	2.2	3.0	2.7	3.3	2.8	3.7	3.1	3.9	3.1	4.0	3.1	4.2	3.0	4.2	3.2

3. Heating capacity table (Indoor unit)

- TC: Total capacity (kW)
- Values mentioned in the table are the values when the indoor unit's total rated capacity is 100% of the outdoor unit capacity.

3-1. Compact cassette type

■ Model: AUXB004GLEH

Outdoor temperature		Indoor temperature						
		16°CDB	18°CDB	20°CDB	21°CDB	22°CDB	24°CDB	26°CDB
°CDB	°CWB	TC	TC	TC	TC	TC	TC	TC
-19.3	-20.0	0.7	0.7	0.7	0.7	0.7	0.7	0.7
-15.0	-16.0	0.8	0.8	0.8	0.8	0.8	0.8	0.8
-12.0	-13.0	0.9	0.9	0.9	0.9	0.9	0.9	0.9
-9.0	-10.0	1.0	1.0	0.9	0.9	0.9	0.9	0.9
-7.0	-8.0	1.0	1.0	1.0	1.0	1.0	1.0	1.0
-5.0	-6.0	1.1	1.1	1.1	1.1	1.1	1.1	1.0
-3.0	-4.0	1.1	1.1	1.1	1.1	1.1	1.1	1.0
-1.0	-2.0	1.2	1.2	1.2	1.2	1.2	1.1	1.0
0.0	-1.0	1.2	1.2	1.2	1.2	1.2	1.1	1.0
2.0	1.0	1.3	1.3	1.3	1.2	1.2	1.1	1.0
5.0	4.0	1.4	1.4	1.3	1.3	1.2	1.1	1.0
7.0	6.0	1.4	1.4	1.3	1.3	1.2	1.1	1.0
9.0	7.8	1.5	1.4	1.3	1.3	1.2	1.1	1.0
12.0	10.6	1.5	1.4	1.3	1.3	1.2	1.1	1.0
15.0	13.5	1.5	1.4	1.3	1.3	1.2	1.1	1.0

■ Model: AUXB007GLEH

Outdoor temperature		Indoor temperature						
		16°CDB	18°CDB	20°CDB	21°CDB	22°CDB	24°CDB	26°CDB
°CDB	°CWB	TC	TC	TC	TC	TC	TC	TC
-19.3	-20.0	1.5	1.4	1.4	1.4	1.4	1.4	1.4
-15.0	-16.0	1.7	1.7	1.7	1.7	1.7	1.7	1.7
-12.0	-13.0	1.9	1.9	1.9	1.8	1.8	1.8	1.8
-9.0	-10.0	2.1	2.1	2.0	2.0	2.0	2.0	2.0
-7.0	-8.0	2.2	2.2	2.2	2.2	2.2	2.1	2.1
-5.0	-6.0	2.3	2.3	2.3	2.3	2.3	2.3	2.2
-3.0	-4.0	2.4	2.4	2.4	2.4	2.4	2.4	2.2
-1.0	-2.0	2.6	2.6	2.5	2.5	2.5	2.4	2.2
0.0	-1.0	2.6	2.6	2.6	2.6	2.6	2.4	2.2
2.0	1.0	2.8	2.8	2.7	2.7	2.6	2.4	2.2
5.0	4.0	3.0	3.0	2.8	2.7	2.6	2.4	2.2
7.0	6.0	3.1	3.0	2.8	2.7	2.6	2.4	2.2
9.0	7.8	3.2	3.0	2.8	2.7	2.6	2.4	2.2
12.0	10.6	3.2	3.0	2.8	2.7	2.6	2.4	2.2
15.0	13.5	3.2	3.0	2.8	2.7	2.6	2.4	2.2

■ Model: AUXB009GLEH

Outdoor temperature		Indoor temperature						
		16°CDB	18°CDB	20°CDB	21°CDB	22°CDB	24°CDB	26°CDB
°CDB	°CWB	TC	TC	TC	TC	TC	TC	TC
-19.3	-20.0	1.7	1.7	1.7	1.7	1.6	1.6	1.6
-15.0	-16.0	1.9	1.9	1.9	1.9	1.9	1.9	1.9
-12.0	-13.0	2.1	2.1	2.1	2.1	2.1	2.1	2.1
-9.0	-10.0	2.4	2.3	2.3	2.3	2.3	2.3	2.3
-7.0	-8.0	2.5	2.5	2.5	2.5	2.5	2.4	2.4
-5.0	-6.0	2.6	2.6	2.6	2.6	2.6	2.6	2.5
-3.0	-4.0	2.8	2.8	2.8	2.8	2.7	2.7	2.5
-1.0	-2.0	2.9	2.9	2.9	2.9	2.9	2.7	2.5
0.0	-1.0	3.0	3.0	3.0	3.0	3.0	2.7	2.5
2.0	1.0	3.2	3.1	3.1	3.1	3.0	2.8	2.5
5.0	4.0	3.4	3.4	3.2	3.1	3.0	2.8	2.6
7.0	6.0	3.5	3.4	3.2	3.1	3.0	2.8	2.6
9.0	7.8	3.6	3.4	3.2	3.1	3.0	2.8	2.6
12.0	10.6	3.6	3.4	3.2	3.1	3.0	2.8	2.6
15.0	13.5	3.6	3.4	3.2	3.1	3.0	2.8	2.6

Model: AUXB012GLEH

Outdoor temperature		Indoor temperature						
		16°CDB	18°CDB	20°CDB	21°CDB	22°CDB	24°CDB	26°CDB
°CDB	°CWB	TC	TC	TC	TC	TC	TC	TC
-19.3	-20.0	2.1	2.1	2.1	2.1	2.1	2.1	2.1
-15.0	-16.0	2.5	2.5	2.5	2.4	2.4	2.4	2.4
-12.0	-13.0	2.7	2.7	2.7	2.7	2.7	2.7	2.7
-9.0	-10.0	3.0	3.0	3.0	3.0	3.0	3.0	2.9
-7.0	-8.0	3.2	3.2	3.2	3.2	3.1	3.1	3.1
-5.0	-6.0	3.4	3.4	3.4	3.3	3.3	3.3	3.2
-3.0	-4.0	3.6	3.6	3.5	3.5	3.5	3.5	3.2
-1.0	-2.0	3.8	3.7	3.7	3.7	3.7	3.5	3.2
0.0	-1.0	3.9	3.8	3.8	3.8	3.8	3.5	3.2
2.0	1.0	4.1	4.0	4.0	3.9	3.8	3.5	3.3
5.0	4.0	4.4	4.3	4.1	4.0	3.8	3.6	3.3
7.0	6.0	4.5	4.4	4.1	4.0	3.8	3.6	3.3
9.0	7.8	4.6	4.4	4.1	4.0	3.8	3.6	3.3
12.0	10.6	4.6	4.4	4.1	4.0	3.8	3.6	3.3
15.0	13.5	4.6	4.4	4.1	4.0	3.8	3.6	3.3

Model: AUXB014GLEH

Outdoor temperature		Indoor temperature						
		16°CDB	18°CDB	20°CDB	21°CDB	22°CDB	24°CDB	26°CDB
°CDB	°CWB	TC	TC	TC	TC	TC	TC	TC
-19.3	-20.0	2.6	2.6	2.6	2.6	2.6	2.6	2.6
-15.0	-16.0	3.0	3.0	3.0	3.0	3.0	3.0	3.0
-12.0	-13.0	3.3	3.3	3.3	3.3	3.3	3.3	3.3
-9.0	-10.0	3.7	3.7	3.6	3.6	3.6	3.6	3.6
-7.0	-8.0	3.9	3.9	3.9	3.9	3.8	3.8	3.8
-5.0	-6.0	4.1	4.1	4.1	4.1	4.1	4.0	3.9
-3.0	-4.0	4.4	4.3	4.3	4.3	4.3	4.3	4.0
-1.0	-2.0	4.6	4.6	4.5	4.5	4.5	4.3	4.0
0.0	-1.0	4.7	4.7	4.7	4.6	4.6	4.3	4.0
2.0	1.0	5.0	4.9	4.9	4.8	4.6	4.3	4.0
5.0	4.0	5.3	5.3	5.0	4.8	4.7	4.3	4.0
7.0	6.0	5.5	5.3	5.0	4.8	4.7	4.3	4.0
9.0	7.8	5.7	5.3	5.0	4.8	4.7	4.3	4.0
12.0	10.6	5.7	5.3	5.0	4.8	4.7	4.3	4.0
15.0	13.5	5.7	5.3	5.0	4.8	4.7	4.3	4.0

Model: AUXB018GLEH

Outdoor temperature		Indoor temperature						
		16°CDB	18°CDB	20°CDB	21°CDB	22°CDB	24°CDB	26°CDB
°CDB	°CWB	TC	TC	TC	TC	TC	TC	TC
-19.3	-20.0	3.3	3.3	3.3	3.3	3.2	3.2	3.2
-15.0	-16.0	3.8	3.8	3.8	3.8	3.8	3.7	3.7
-12.0	-13.0	4.2	4.2	4.2	4.2	4.2	4.1	4.1
-9.0	-10.0	4.6	4.6	4.6	4.6	4.6	4.5	4.5
-7.0	-8.0	4.9	4.9	4.9	4.9	4.8	4.8	4.8
-5.0	-6.0	5.2	5.2	5.2	5.1	5.1	5.1	5.0
-3.0	-4.0	5.5	5.5	5.4	5.4	5.4	5.4	5.0
-1.0	-2.0	5.8	5.8	5.7	5.7	5.7	5.4	5.0
0.0	-1.0	5.9	5.9	5.9	5.8	5.8	5.4	5.0
2.0	1.0	6.2	6.2	6.2	6.0	5.8	5.4	5.0
5.0	4.0	6.7	6.7	6.3	6.1	5.9	5.5	5.0
7.0	6.0	7.0	6.7	6.3	6.1	5.9	5.5	5.0
9.0	7.8	7.1	6.7	6.3	6.1	5.9	5.5	5.0
12.0	10.6	7.1	6.7	6.3	6.1	5.9	5.5	5.0
15.0	13.5	7.1	6.7	6.3	6.1	5.9	5.5	5.0

Model: AUXB024GLEH

Outdoor temperature		Indoor temperature						
		16°CDB	18°CDB	20°CDB	21°CDB	22°CDB	24°CDB	26°CDB
°CDB	°CWB	TC	TC	TC	TC	TC	TC	TC
-19.3	-20.0	4.2	4.1	4.1	4.1	4.1	4.1	4.1
-15.0	-16.0	4.8	4.8	4.8	4.8	4.8	4.7	4.7
-12.0	-13.0	5.4	5.3	5.3	5.3	5.3	5.3	5.2
-9.0	-10.0	5.9	5.9	5.8	5.8	5.8	5.8	5.7
-7.0	-8.0	6.2	6.2	6.2	6.2	6.1	6.1	6.1
-5.0	-6.0	6.6	6.6	6.6	6.5	6.5	6.5	6.3
-3.0	-4.0	7.0	6.9	6.9	6.9	6.9	6.8	6.3
-1.0	-2.0	7.4	7.3	7.3	7.2	7.2	6.9	6.3
0.0	-1.0	7.5	7.5	7.4	7.4	7.4	6.9	6.3
2.0	1.0	7.9	7.9	7.8	7.7	7.4	6.9	6.3
5.0	4.0	8.5	8.5	8.0	7.7	7.5	6.9	6.4
7.0	6.0	8.9	8.5	8.0	7.7	7.5	6.9	6.4
9.0	7.8	9.1	8.5	8.0	7.7	7.5	6.9	6.4
12.0	10.6	9.1	8.5	8.0	7.7	7.5	6.9	6.4
15.0	13.5	9.1	8.5	8.0	7.7	7.5	6.9	6.4

3-2. 4-way flow cassette type

■ Model: AUXD18GALH

Outdoor temperature		Indoor temperature						
		16°CDB	18°CDB	20°CDB	21°CDB	22°CDB	24°CDB	26°CDB
°CDB	°CWB	TC	TC	TC	TC	TC	TC	TC
-19.3	-20.0	3.3	3.3	3.3	3.3	3.2	3.2	3.2
-15.0	-16.0	3.8	3.8	3.8	3.8	3.8	3.7	3.7
-12.0	-13.0	4.2	4.2	4.2	4.2	4.2	4.1	4.1
-9.0	-10.0	4.6	4.6	4.6	4.6	4.6	4.5	4.5
-7.0	-8.0	4.9	4.9	4.9	4.9	4.8	4.8	4.8
-5.0	-6.0	5.2	5.2	5.2	5.1	5.1	5.1	5.0
-3.0	-4.0	5.5	5.5	5.4	5.4	5.4	5.4	5.0
-1.0	-2.0	5.8	5.8	5.7	5.7	5.7	5.4	5.0
0.0	-1.0	5.9	5.9	5.9	5.8	5.8	5.4	5.0
2.0	1.0	6.2	6.2	6.2	6.0	5.8	5.4	5.0
5.0	4.0	6.7	6.7	6.3	6.1	5.9	5.5	5.0
7.0	6.0	7.0	6.7	6.3	6.1	5.9	5.5	5.0
9.0	7.8	7.1	6.7	6.3	6.1	5.9	5.5	5.0
12.0	10.6	7.1	6.7	6.3	6.1	5.9	5.5	5.0
15.0	13.5	7.1	6.7	6.3	6.1	5.9	5.5	5.0

■ Model: AUXD24GALH

Outdoor temperature		Indoor temperature						
		16°CDB	18°CDB	20°CDB	21°CDB	22°CDB	24°CDB	26°CDB
°CDB	°CWB	TC	TC	TC	TC	TC	TC	TC
-19.3	-20.0	4.2	4.1	4.1	4.1	4.1	4.1	4.1
-15.0	-16.0	4.8	4.8	4.8	4.8	4.8	4.7	4.7
-12.0	-13.0	5.4	5.3	5.3	5.3	5.3	5.3	5.2
-9.0	-10.0	5.9	5.9	5.8	5.8	5.8	5.8	5.7
-7.0	-8.0	6.2	6.2	6.2	6.2	6.1	6.1	6.1
-5.0	-6.0	6.6	6.6	6.6	6.5	6.5	6.5	6.3
-3.0	-4.0	7.0	6.9	6.9	6.9	6.9	6.8	6.3
-1.0	-2.0	7.4	7.3	7.3	7.2	7.2	6.9	6.3
0.0	-1.0	7.5	7.5	7.4	7.4	7.4	6.9	6.3
2.0	1.0	7.9	7.9	7.8	7.7	7.4	6.9	6.3
5.0	4.0	8.5	8.5	8.0	7.7	7.5	6.9	6.4
7.0	6.0	8.9	8.5	8.0	7.7	7.5	6.9	6.4
9.0	7.8	9.1	8.5	8.0	7.7	7.5	6.9	6.4
12.0	10.6	9.1	8.5	8.0	7.7	7.5	6.9	6.4
15.0	13.5	9.1	8.5	8.0	7.7	7.5	6.9	6.4

■ Model: AUXA30GALH

Outdoor temperature		Indoor temperature						
		16°CDB	18°CDB	20°CDB	21°CDB	22°CDB	24°CDB	26°CDB
°CDB	°CWB	TC	TC	TC	TC	TC	TC	TC
-19.3	-20.0	5.2	5.2	5.2	5.2	5.1	5.1	5.1
-15.0	-16.0	6.0	6.0	6.0	6.0	6.0	5.9	5.9
-12.0	-13.0	6.7	6.7	6.6	6.6	6.6	6.6	6.5
-9.0	-10.0	7.4	7.3	7.3	7.3	7.2	7.2	7.2
-7.0	-8.0	7.8	7.8	7.7	7.7	7.7	7.7	7.6
-5.0	-6.0	8.3	8.2	8.2	8.2	8.1	8.1	7.9
-3.0	-4.0	8.7	8.7	8.6	8.6	8.6	8.5	7.9
-1.0	-2.0	9.2	9.1	9.1	9.0	9.0	8.6	7.9
0.0	-1.0	9.4	9.4	9.3	9.3	9.2	8.6	7.9
2.0	1.0	9.9	9.8	9.8	9.6	9.3	8.6	7.9
5.0	4.0	10.6	10.6	10.0	9.7	9.3	8.7	8.0
7.0	6.0	11.1	10.6	10.0	9.7	9.3	8.7	8.0
9.0	7.8	11.3	10.6	10.0	9.7	9.3	8.7	8.0
12.0	10.6	11.3	10.7	10.0	9.7	9.3	8.7	8.0
15.0	13.5	11.3	10.7	10.0	9.7	9.3	8.7	8.0

Model: AUXA34GALH

Outdoor temperature		Indoor temperature						
		16°CDB	18°CDB	20°CDB	21°CDB	22°CDB	24°CDB	26°CDB
°CDB	°CWB	TC	TC	TC	TC	TC	TC	TC
-19.3	-20.0	5.6	5.5	5.5	5.5	5.5	5.5	5.5
-15.0	-16.0	6.5	6.4	6.4	6.4	6.4	6.4	6.4
-12.0	-13.0	7.2	7.2	7.2	7.2	7.1	7.1	7.1
-9.0	-10.0	8.0	8.0	7.9	7.9	7.9	7.8	7.8
-7.0	-8.0	8.5	8.5	8.4	8.4	8.4	8.3	8.3
-5.0	-6.0	9.1	9.0	9.0	9.0	8.9	8.9	8.6
-3.0	-4.0	9.6	9.5	9.5	9.5	9.4	9.4	8.7
-1.0	-2.0	10.1	10.1	10.1	10.0	10.0	9.5	8.8
0.0	-1.0	10.4	10.4	10.3	10.3	10.2	9.5	8.8
2.0	1.0	11.0	10.9	10.9	10.7	10.3	9.6	8.8
5.0	4.0	11.9	11.8	11.1	10.8	10.4	9.7	8.9
7.0	6.0	12.5	12.0	11.2	10.9	10.5	9.7	9.0
9.0	7.8	12.7	12.0	11.2	10.9	10.5	9.7	9.0
12.0	10.6	12.7	12.0	11.2	10.9	10.5	9.7	9.0
15.0	13.5	12.7	12.0	11.2	10.9	10.5	9.7	9.0

Model: AUXA36GALH

Outdoor temperature		Indoor temperature						
		16°CDB	18°CDB	20°CDB	21°CDB	22°CDB	24°CDB	26°CDB
°CDB	°CWB	TC	TC	TC	TC	TC	TC	TC
-19.3	-20.0	6.5	6.5	6.5	6.5	6.4	6.4	6.4
-15.0	-16.0	7.5	7.5	7.5	7.5	7.5	7.4	7.4
-12.0	-13.0	8.4	8.3	8.3	8.3	8.3	8.2	8.2
-9.0	-10.0	9.2	9.2	9.1	9.1	9.0	9.0	9.0
-7.0	-8.0	9.8	9.7	9.6	9.6	9.6	9.6	9.5
-5.0	-6.0	10.3	10.3	10.2	10.2	10.2	10.1	9.8
-3.0	-4.0	10.9	10.8	10.8	10.8	10.7	10.7	9.9
-1.0	-2.0	11.5	11.4	11.3	11.3	11.3	10.7	9.9
0.0	-1.0	11.8	11.7	11.6	11.6	11.5	10.7	9.9
2.0	1.0	12.4	12.3	12.2	12.0	11.6	10.8	9.9
5.0	4.0	13.3	13.2	12.5	12.1	11.7	10.8	10.0
7.0	6.0	13.8	13.3	12.5	12.1	11.7	10.8	10.0
9.0	7.8	14.2	13.3	12.5	12.1	11.7	10.8	10.0
12.0	10.6	14.2	13.3	12.5	12.1	11.7	10.8	10.0
15.0	13.5	14.2	13.3	12.5	12.1	11.7	10.8	10.0

Model: AUXA45GALH

Outdoor temperature		Indoor temperature						
		16°CDB	18°CDB	20°CDB	21°CDB	22°CDB	24°CDB	26°CDB
°CDB	°CWB	TC	TC	TC	TC	TC	TC	TC
-19.3	-20.0	7.3	7.2	7.2	7.2	7.2	7.2	7.2
-15.0	-16.0	8.4	8.4	8.4	8.4	8.4	8.3	8.3
-12.0	-13.0	9.4	9.3	9.3	9.2	9.2	9.2	9.2
-9.0	-10.0	10.3	10.3	10.2	10.2	10.1	10.1	10.0
-7.0	-8.0	10.9	10.9	10.8	10.8	10.8	10.7	10.7
-5.0	-6.0	11.6	11.5	11.5	11.4	11.4	11.3	11.0
-3.0	-4.0	12.2	12.1	12.1	12.0	12.0	12.0	11.1
-1.0	-2.0	12.9	12.8	12.7	12.7	12.6	12.0	11.1
0.0	-1.0	13.2	13.1	13.0	13.0	12.9	12.0	11.1
2.0	1.0	13.9	13.8	13.7	13.4	13.0	12.0	11.1
5.0	4.0	14.9	14.8	14.0	13.5	13.1	12.1	11.2
7.0	6.0	15.5	14.9	14.0	13.5	13.1	12.1	11.2
9.0	7.8	15.9	14.9	14.0	13.5	13.1	12.1	11.2
12.0	10.6	15.9	14.9	14.0	13.5	13.1	12.1	11.2
15.0	13.5	15.9	14.9	14.0	13.5	13.1	12.1	11.2

Model: AUXA54GALH

Outdoor temperature		Indoor temperature						
		16°CDB	18°CDB	20°CDB	21°CDB	22°CDB	24°CDB	26°CDB
°CDB	°CWB	TC	TC	TC	TC	TC	TC	TC
-19.3	-20.0	8.3	8.3	8.3	8.3	8.2	8.2	8.2
-15.0	-16.0	9.7	9.6	9.6	9.5	9.5	9.5	9.5
-12.0	-13.0	10.7	10.7	10.6	10.6	10.6	10.5	10.5
-9.0	-10.0	11.8	11.7	11.6	11.6	11.6	11.5	11.5
-7.0	-8.0	12.5	12.4	12.3	12.3	12.3	12.2	12.2
-5.0	-6.0	13.2	13.2	13.1	13.1	13.0	13.0	12.6
-3.0	-4.0	14.0	13.9	13.8	13.8	13.7	13.7	12.6
-1.0	-2.0	14.7	14.6	14.5	14.5	14.4	13.7	12.6
0.0	-1.0	15.1	15.0	14.9	14.8	14.8	13.7	12.6
2.0	1.0	15.8	15.7	15.6	15.3	14.8	13.8	12.7
5.0	4.0	17.0	16.9	16.0	15.4	14.9	13.9	12.8
7.0	6.0	17.7	17.0	16.0	15.4	14.9	13.9	12.8
9.0	7.8	18.1	17.0	16.0	15.4	14.9	13.9	12.8
12.0	10.6	18.1	17.1	16.0	15.4	14.9	13.9	12.8
15.0	13.5	18.1	17.1	16.0	15.4	14.9	13.9	12.8

3-3. Circular flow cassette type

■ Model: AUXN009GLAH

Outdoor temperature		Indoor temperature						
		16°CDB	18°CDB	20°CDB	21°CDB	22°CDB	24°CDB	26°CDB
°CDB	°CWB	TC	TC	TC	TC	TC	TC	TC
-19.3	-20.0	1.7	1.7	1.7	1.7	1.6	1.6	1.6
-15.0	-16.0	1.9	1.9	1.9	1.9	1.9	1.9	1.9
-12.0	-13.0	2.1	2.1	2.1	2.1	2.1	2.1	2.1
-9.0	-10.0	2.4	2.3	2.3	2.3	2.3	2.3	2.3
-7.0	-8.0	2.5	2.5	2.5	2.5	2.5	2.4	2.4
-5.0	-6.0	2.6	2.6	2.6	2.6	2.6	2.6	2.5
-3.0	-4.0	2.8	2.8	2.8	2.8	2.7	2.7	2.5
-1.0	-2.0	2.9	2.9	2.9	2.9	2.9	2.7	2.5
0.0	-1.0	3.0	3.0	3.0	3.0	3.0	2.7	2.5
2.0	1.0	3.2	3.1	3.1	3.1	3.0	2.8	2.5
5.0	4.0	3.4	3.4	3.2	3.1	3.0	2.8	2.6
7.0	6.0	3.5	3.4	3.2	3.1	3.0	2.8	2.6
9.0	7.8	3.6	3.4	3.2	3.1	3.0	2.8	2.6
12.0	10.6	3.6	3.4	3.2	3.1	3.0	2.8	2.6
15.0	13.5	3.6	3.4	3.2	3.1	3.0	2.8	2.6

■ Model: AUXN012GLAH

Outdoor temperature		Indoor temperature						
		16°CDB	18°CDB	20°CDB	21°CDB	22°CDB	24°CDB	26°CDB
°CDB	°CWB	TC	TC	TC	TC	TC	TC	TC
-19.3	-20.0	2.1	2.1	2.1	2.1	2.1	2.1	2.0
-15.0	-16.0	2.4	2.4	2.4	2.4	2.4	2.4	2.4
-12.0	-13.0	2.7	2.7	2.7	2.6	2.6	2.6	2.6
-9.0	-10.0	2.9	2.9	2.9	2.9	2.9	2.9	2.9
-7.0	-8.0	3.1	3.1	3.1	3.1	3.1	3.1	3.0
-5.0	-6.0	3.3	3.3	3.3	3.3	3.3	3.2	3.1
-3.0	-4.0	3.5	3.5	3.5	3.4	3.4	3.4	3.2
-1.0	-2.0	3.7	3.7	3.6	3.6	3.6	3.4	3.2
0.0	-1.0	3.8	3.7	3.7	3.7	3.7	3.4	3.2
2.0	1.0	4.0	3.9	3.9	3.8	3.7	3.4	3.2
5.0	4.0	4.3	4.2	4.0	3.9	3.7	3.5	3.2
7.0	6.0	4.4	4.3	4.0	3.9	3.7	3.5	3.2
9.0	7.8	4.5	4.3	4.0	3.9	3.7	3.5	3.2
12.0	10.6	4.5	4.3	4.0	3.9	3.7	3.5	3.2
15.0	13.5	4.5	4.3	4.0	3.9	3.7	3.5	3.2

■ Model: AUXN014GLAH

Outdoor temperature		Indoor temperature						
		16°CDB	18°CDB	20°CDB	21°CDB	22°CDB	24°CDB	26°CDB
°CDB	°CWB	TC	TC	TC	TC	TC	TC	TC
-19.3	-20.0	2.6	2.6	2.6	2.6	2.6	2.6	2.6
-15.0	-16.0	3.0	3.0	3.0	3.0	3.0	3.0	3.0
-12.0	-13.0	3.3	3.3	3.3	3.3	3.3	3.3	3.3
-9.0	-10.0	3.7	3.7	3.6	3.6	3.6	3.6	3.6
-7.0	-8.0	3.9	3.9	3.9	3.9	3.8	3.8	3.8
-5.0	-6.0	4.1	4.1	4.1	4.1	4.1	4.0	3.9
-3.0	-4.0	4.4	4.3	4.3	4.3	4.3	4.3	4.0
-1.0	-2.0	4.6	4.6	4.5	4.5	4.5	4.3	4.0
0.0	-1.0	4.7	4.7	4.7	4.6	4.6	4.3	4.0
2.0	1.0	5.0	4.9	4.9	4.8	4.6	4.3	4.0
5.0	4.0	5.3	5.3	5.0	4.8	4.7	4.3	4.0
7.0	6.0	5.5	5.3	5.0	4.8	4.7	4.3	4.0
9.0	7.8	5.7	5.3	5.0	4.8	4.7	4.3	4.0
12.0	10.6	5.7	5.3	5.0	4.8	4.7	4.3	4.0
15.0	13.5	5.7	5.3	5.0	4.8	4.7	4.3	4.0

■ Model: AUXM018GLEH

Outdoor temperature		Indoor temperature						
		16°CDB	18°CDB	20°CDB	21°CDB	22°CDB	24°CDB	26°CDB
°CDB	°CWB	TC	TC	TC	TC	TC	TC	TC
-19.3	-20.0	3.3	3.3	3.3	3.3	3.2	3.2	3.2
-15.0	-16.0	3.8	3.8	3.8	3.8	3.8	3.7	3.7
-12.0	-13.0	4.2	4.2	4.2	4.2	4.2	4.1	4.1
-9.0	-10.0	4.6	4.6	4.6	4.6	4.6	4.5	4.5
-7.0	-8.0	4.9	4.9	4.9	4.9	4.8	4.8	4.8
-5.0	-6.0	5.2	5.2	5.2	5.1	5.1	5.1	5.0
-3.0	-4.0	5.5	5.5	5.4	5.4	5.4	5.4	5.0
-1.0	-2.0	5.8	5.8	5.7	5.7	5.7	5.4	5.0
0.0	-1.0	5.9	5.9	5.9	5.8	5.8	5.4	5.0
2.0	1.0	6.2	6.2	6.2	6.0	5.8	5.4	5.0
5.0	4.0	6.7	6.7	6.3	6.1	5.9	5.5	5.0
7.0	6.0	7.0	6.7	6.3	6.1	5.9	5.5	5.0
9.0	7.8	7.1	6.7	6.3	6.1	5.9	5.5	5.0
12.0	10.6	7.1	6.7	6.3	6.1	5.9	5.5	5.0
15.0	13.5	7.1	6.7	6.3	6.1	5.9	5.5	5.0

■ Model: AUXM024GLEH

Outdoor temperature		Indoor temperature						
		16°CDB	18°CDB	20°CDB	21°CDB	22°CDB	24°CDB	26°CDB
°CDB	°CWB	TC	TC	TC	TC	TC	TC	TC
-19.3	-20.0	4.2	4.1	4.1	4.1	4.1	4.1	4.1
-15.0	-16.0	4.8	4.8	4.8	4.8	4.8	4.7	4.7
-12.0	-13.0	5.4	5.3	5.3	5.3	5.3	5.3	5.2
-9.0	-10.0	5.9	5.9	5.8	5.8	5.8	5.8	5.7
-7.0	-8.0	6.2	6.2	6.2	6.2	6.1	6.1	6.1
-5.0	-6.0	6.6	6.6	6.6	6.5	6.5	6.5	6.3
-3.0	-4.0	7.0	6.9	6.9	6.9	6.9	6.8	6.3
-1.0	-2.0	7.4	7.3	7.3	7.2	7.2	6.9	6.3
0.0	-1.0	7.5	7.5	7.4	7.4	7.4	6.9	6.3
2.0	1.0	7.9	7.9	7.8	7.7	7.4	6.9	6.3
5.0	4.0	8.5	8.5	8.0	7.7	7.5	6.9	6.4
7.0	6.0	8.9	8.5	8.0	7.7	7.5	6.9	6.4
9.0	7.8	9.1	8.5	8.0	7.7	7.5	6.9	6.4
12.0	10.6	9.1	8.5	8.0	7.7	7.5	6.9	6.4
15.0	13.5	9.1	8.5	8.0	7.7	7.5	6.9	6.4

■ Model: AUXM030GLEH

Outdoor temperature		Indoor temperature						
		16°CDB	18°CDB	20°CDB	21°CDB	22°CDB	24°CDB	26°CDB
°CDB	°CWB	TC	TC	TC	TC	TC	TC	TC
-19.3	-20.0	5.2	5.2	5.2	5.2	5.1	5.1	5.1
-15.0	-16.0	6.0	6.0	6.0	6.0	6.0	5.9	5.9
-12.0	-13.0	6.7	6.7	6.6	6.6	6.6	6.6	6.5
-9.0	-10.0	7.4	7.3	7.3	7.3	7.2	7.2	7.2
-7.0	-8.0	7.8	7.8	7.7	7.7	7.7	7.7	7.6
-5.0	-6.0	8.3	8.2	8.2	8.2	8.1	8.1	7.9
-3.0	-4.0	8.7	8.7	8.6	8.6	8.6	8.5	7.9
-1.0	-2.0	9.2	9.1	9.1	9.0	9.0	8.6	7.9
0.0	-1.0	9.4	9.4	9.3	9.3	9.2	8.6	7.9
2.0	1.0	9.9	9.8	9.8	9.6	9.3	8.6	7.9
5.0	4.0	10.6	10.6	10.0	9.7	9.3	8.7	8.0
7.0	6.0	11.1	10.6	10.0	9.7	9.3	8.7	8.0
9.0	7.8	11.3	10.6	10.0	9.7	9.3	8.7	8.0
12.0	10.6	11.3	10.7	10.0	9.7	9.3	8.7	8.0
15.0	13.5	11.3	10.7	10.0	9.7	9.3	8.7	8.0

Model: AUXK018GLEH

Outdoor temperature		Indoor temperature						
		16°CDB	18°CDB	20°CDB	21°CDB	22°CDB	24°CDB	26°CDB
°CDB	°CWB	TC	TC	TC	TC	TC	TC	TC
-19.3	-20.0	3.3	3.3	3.3	3.3	3.2	3.2	3.2
-15.0	-16.0	3.8	3.8	3.8	3.8	3.8	3.7	3.7
-12.0	-13.0	4.2	4.2	4.2	4.2	4.2	4.1	4.1
-9.0	-10.0	4.6	4.6	4.6	4.6	4.6	4.5	4.5
-7.0	-8.0	4.9	4.9	4.9	4.9	4.8	4.8	4.8
-5.0	-6.0	5.2	5.2	5.2	5.1	5.1	5.1	5.0
-3.0	-4.0	5.5	5.5	5.4	5.4	5.4	5.4	5.0
-1.0	-2.0	5.8	5.8	5.7	5.7	5.7	5.4	5.0
0.0	-1.0	5.9	5.9	5.9	5.8	5.8	5.4	5.0
2.0	1.0	6.2	6.2	6.2	6.0	5.8	5.4	5.0
5.0	4.0	6.7	6.7	6.3	6.1	5.9	5.5	5.0
7.0	6.0	7.0	6.7	6.3	6.1	5.9	5.5	5.0
9.0	7.8	7.1	6.7	6.3	6.1	5.9	5.5	5.0
12.0	10.6	7.1	6.7	6.3	6.1	5.9	5.5	5.0
15.0	13.5	7.1	6.7	6.3	6.1	5.9	5.5	5.0

Model: AUXK024GLEH

Outdoor temperature		Indoor temperature						
		16°CDB	18°CDB	20°CDB	21°CDB	22°CDB	24°CDB	26°CDB
°CDB	°CWB	TC	TC	TC	TC	TC	TC	TC
-19.3	-20.0	4.2	4.1	4.1	4.1	4.1	4.1	4.1
-15.0	-16.0	4.8	4.8	4.8	4.8	4.8	4.7	4.7
-12.0	-13.0	5.4	5.3	5.3	5.3	5.3	5.3	5.2
-9.0	-10.0	5.9	5.9	5.8	5.8	5.8	5.8	5.7
-7.0	-8.0	6.2	6.2	6.2	6.2	6.1	6.1	6.1
-5.0	-6.0	6.6	6.6	6.6	6.5	6.5	6.5	6.3
-3.0	-4.0	7.0	6.9	6.9	6.9	6.9	6.8	6.3
-1.0	-2.0	7.4	7.3	7.3	7.2	7.2	6.9	6.3
0.0	-1.0	7.5	7.5	7.4	7.4	7.4	6.9	6.3
2.0	1.0	7.9	7.9	7.8	7.7	7.4	6.9	6.3
5.0	4.0	8.5	8.5	8.0	7.7	7.5	6.9	6.4
7.0	6.0	8.9	8.5	8.0	7.7	7.5	6.9	6.4
9.0	7.8	9.1	8.5	8.0	7.7	7.5	6.9	6.4
12.0	10.6	9.1	8.5	8.0	7.7	7.5	6.9	6.4
15.0	13.5	9.1	8.5	8.0	7.7	7.5	6.9	6.4

Model: AUXK030GLEH

Outdoor temperature		Indoor temperature						
		16°CDB	18°CDB	20°CDB	21°CDB	22°CDB	24°CDB	26°CDB
°CDB	°CWB	TC	TC	TC	TC	TC	TC	TC
-19.3	-20.0	5.2	5.2	5.2	5.2	5.1	5.1	5.1
-15.0	-16.0	6.0	6.0	6.0	6.0	6.0	5.9	5.9
-12.0	-13.0	6.7	6.7	6.6	6.6	6.6	6.6	6.5
-9.0	-10.0	7.4	7.3	7.3	7.3	7.2	7.2	7.2
-7.0	-8.0	7.8	7.8	7.7	7.7	7.7	7.7	7.6
-5.0	-6.0	8.3	8.2	8.2	8.2	8.1	8.1	7.9
-3.0	-4.0	8.7	8.7	8.6	8.6	8.6	8.5	7.9
-1.0	-2.0	9.2	9.1	9.1	9.0	9.0	8.6	7.9
0.0	-1.0	9.4	9.4	9.3	9.3	9.2	8.6	7.9
2.0	1.0	9.9	9.8	9.8	9.6	9.3	8.6	7.9
5.0	4.0	10.6	10.6	10.0	9.7	9.3	8.7	8.0
7.0	6.0	11.1	10.6	10.0	9.7	9.3	8.7	8.0
9.0	7.8	11.3	10.6	10.0	9.7	9.3	8.7	8.0
12.0	10.6	11.3	10.7	10.0	9.7	9.3	8.7	8.0
15.0	13.5	11.3	10.7	10.0	9.7	9.3	8.7	8.0

Model: AUXK034GLEH

Outdoor temperature		Indoor temperature						
		16°CDB	18°CDB	20°CDB	21°CDB	22°CDB	24°CDB	26°CDB
°CDB	°CWB	TC	TC	TC	TC	TC	TC	TC
-19.3	-20.0	5.8	5.8	5.8	5.8	5.8	5.8	5.7
-15.0	-16.0	6.8	6.7	6.7	6.7	6.7	6.6	6.6
-12.0	-13.0	7.5	7.5	7.4	7.4	7.4	7.4	7.3
-9.0	-10.0	8.2	8.2	8.1	8.1	8.1	8.1	8.0
-7.0	-8.0	8.7	8.7	8.6	8.6	8.6	8.6	8.5
-5.0	-6.0	9.2	9.2	9.2	9.1	9.1	9.1	8.8
-3.0	-4.0	9.8	9.7	9.7	9.6	9.6	9.6	8.9
-1.0	-2.0	10.3	10.2	10.2	10.1	10.1	9.6	8.9
0.0	-1.0	10.6	10.5	10.4	10.4	10.3	9.6	8.9
2.0	1.0	11.1	11.0	11.0	10.7	10.4	9.6	8.9
5.0	4.0	11.9	11.8	11.2	10.8	10.5	9.7	9.0
7.0	6.0	12.4	11.9	11.2	10.8	10.4	9.7	9.0
9.0	7.8	12.7	11.9	11.2	10.8	10.5	9.7	9.0
12.0	10.6	12.7	11.9	11.2	10.8	10.5	9.7	9.0
15.0	13.5	12.7	11.9	11.2	10.8	10.5	9.7	9.0

■ Model: AUXK036GLEH

Outdoor temperature		Indoor temperature						
		16°CDB	18°CDB	20°CDB	21°CDB	22°CDB	24°CDB	26°CDB
°CDB	°CWB	TC	TC	TC	TC	TC	TC	TC
-19.3	-20.0	6.5	6.5	6.5	6.5	6.4	6.4	6.4
-15.0	-16.0	7.5	7.5	7.5	7.5	7.5	7.4	7.4
-12.0	-13.0	8.4	8.3	8.3	8.3	8.3	8.2	8.2
-9.0	-10.0	9.2	9.2	9.1	9.1	9.0	9.0	9.0
-7.0	-8.0	9.8	9.7	9.6	9.6	9.6	9.6	9.5
-5.0	-6.0	10.3	10.3	10.2	10.2	10.2	10.1	9.8
-3.0	-4.0	10.9	10.8	10.8	10.8	10.7	10.7	9.9
-1.0	-2.0	11.5	11.4	11.3	11.3	11.3	10.7	9.9
0.0	-1.0	11.8	11.7	11.6	11.6	11.5	10.7	9.9
2.0	1.0	12.4	12.3	12.2	12.0	11.6	10.8	9.9
5.0	4.0	13.3	13.2	12.5	12.1	11.7	10.8	10.0
7.0	6.0	13.8	13.3	12.5	12.1	11.7	10.8	10.0
9.0	7.8	14.2	13.3	12.5	12.1	11.7	10.8	10.0
12.0	10.6	14.2	13.3	12.5	12.1	11.7	10.8	10.0
15.0	13.5	14.2	13.3	12.5	12.1	11.7	10.8	10.0

■ Model: AUXK045GLEH

Outdoor temperature		Indoor temperature						
		16°CDB	18°CDB	20°CDB	21°CDB	22°CDB	24°CDB	26°CDB
°CDB	°CWB	TC	TC	TC	TC	TC	TC	TC
-19.3	-20.0	7.3	7.2	7.2	7.2	7.2	7.2	7.2
-15.0	-16.0	8.4	8.4	8.4	8.4	8.4	8.3	8.3
-12.0	-13.0	9.4	9.3	9.3	9.2	9.2	9.2	9.2
-9.0	-10.0	10.3	10.3	10.2	10.2	10.1	10.1	10.0
-7.0	-8.0	10.9	10.9	10.8	10.8	10.8	10.7	10.7
-5.0	-6.0	11.6	11.5	11.5	11.4	11.4	11.3	11.0
-3.0	-4.0	12.2	12.1	12.1	12.0	12.0	12.0	11.1
-1.0	-2.0	12.9	12.8	12.7	12.7	12.6	12.0	11.1
0.0	-1.0	13.2	13.1	13.0	13.0	12.9	12.0	11.1
2.0	1.0	13.9	13.8	13.7	13.4	13.0	12.0	11.1
5.0	4.0	14.9	14.8	14.0	13.5	13.1	12.1	11.2
7.0	6.0	15.5	14.9	14.0	13.5	13.1	12.1	11.2
9.0	7.8	15.9	14.9	14.0	13.5	13.1	12.1	11.2
12.0	10.6	15.9	14.9	14.0	13.5	13.1	12.1	11.2
15.0	13.5	15.9	14.9	14.0	13.5	13.1	12.1	11.2

■ Model: AUXK054GLEH

Outdoor temperature		Indoor temperature						
		16°CDB	18°CDB	20°CDB	21°CDB	22°CDB	24°CDB	26°CDB
°CDB	°CWB	TC	TC	TC	TC	TC	TC	TC
-19.3	-20.0	8.3	8.3	8.3	8.3	8.2	8.2	8.2
-15.0	-16.0	9.7	9.6	9.6	9.5	9.5	9.5	9.5
-12.0	-13.0	10.7	10.7	10.6	10.6	10.6	10.5	10.5
-9.0	-10.0	11.8	11.7	11.6	11.6	11.6	11.5	11.5
-7.0	-8.0	12.5	12.4	12.3	12.3	12.3	12.2	12.2
-5.0	-6.0	13.2	13.2	13.1	13.1	13.0	13.0	12.6
-3.0	-4.0	14.0	13.9	13.8	13.8	13.7	13.7	12.6
-1.0	-2.0	14.7	14.6	14.5	14.5	14.4	13.7	12.6
0.0	-1.0	15.1	15.0	14.9	14.8	14.8	13.7	12.6
2.0	1.0	15.8	15.7	15.6	15.3	14.8	13.8	12.7
5.0	4.0	17.0	16.9	16.0	15.4	14.9	13.9	12.8
7.0	6.0	17.7	17.0	16.0	15.4	14.9	13.9	12.8
9.0	7.8	18.1	17.0	16.0	15.4	14.9	13.9	12.8
12.0	10.6	18.1	17.1	16.0	15.4	14.9	13.9	12.8
15.0	13.5	18.1	17.1	16.0	15.4	14.9	13.9	12.8

3-4. 3D flow cassette type

■ Model: AUXS018GLEH

Outdoor temperature		Indoor temperature						
		16°CDB	18°CDB	20°CDB	21°CDB	22°CDB	24°CDB	26°CDB
°CDB	°CWB	TC	TC	TC	TC	TC	TC	TC
-19.3	-20.0	3.3	3.3	3.3	3.3	3.2	3.2	3.2
-15.0	-16.0	3.8	3.8	3.8	3.8	3.8	3.7	3.7
-12.0	-13.0	4.2	4.2	4.2	4.2	4.2	4.1	4.1
-9.0	-10.0	4.6	4.6	4.6	4.6	4.6	4.5	4.5
-7.0	-8.0	4.9	4.9	4.9	4.9	4.8	4.8	4.8
-5.0	-6.0	5.2	5.2	5.2	5.1	5.1	5.1	5.0
-3.0	-4.0	5.5	5.5	5.5	5.4	5.4	5.4	5.0
-1.0	-2.0	5.8	5.8	5.7	5.7	5.7	5.4	5.0
0.0	-1.0	5.9	5.9	5.9	5.8	5.8	5.4	5.0
2.0	1.0	6.2	6.2	6.2	6.0	5.8	5.4	5.0
5.0	4.0	6.7	6.7	6.3	6.1	5.9	5.5	5.0
7.0	6.0	7.0	6.7	6.3	6.1	5.9	5.5	5.0
9.0	7.8	7.1	6.7	6.3	6.1	5.9	5.5	5.0
12.0	10.6	7.1	6.7	6.3	6.1	5.9	5.5	5.0
15.0	13.5	7.1	6.7	6.3	6.1	5.9	5.5	5.0

■ Model: AUXS024GLEH

Outdoor temperature		Indoor temperature						
		16°CDB	18°CDB	20°CDB	21°CDB	22°CDB	24°CDB	26°CDB
°CDB	°CWB	TC	TC	TC	TC	TC	TC	TC
-19.3	-20.0	4.2	4.1	4.1	4.1	4.1	4.1	4.1
-15.0	-16.0	4.8	4.8	4.8	4.8	4.8	4.7	4.7
-12.0	-13.0	5.4	5.3	5.3	5.3	5.3	5.3	5.3
-9.0	-10.0	5.9	5.9	5.8	5.8	5.8	5.8	5.7
-7.0	-8.0	6.2	6.2	6.2	6.2	6.1	6.1	6.1
-5.0	-6.0	6.6	6.6	6.6	6.5	6.5	6.5	6.3
-3.0	-4.0	7.0	6.9	6.9	6.9	6.9	6.8	6.3
-1.0	-2.0	7.4	7.3	7.3	7.2	7.2	6.9	6.3
0.0	-1.0	7.5	7.5	7.4	7.4	7.4	6.9	6.3
2.0	1.0	7.9	7.9	7.8	7.7	7.4	6.9	6.3
5.0	4.0	8.5	8.5	8.0	7.7	7.5	6.9	6.4
7.0	6.0	8.9	8.5	8.0	7.7	7.5	6.9	6.4
9.0	7.8	9.1	8.5	8.0	7.7	7.5	6.9	6.4
12.0	10.6	9.1	8.5	8.0	7.7	7.5	6.9	6.4
15.0	13.5	9.1	8.5	8.0	7.7	7.5	6.9	6.4

3-5. One way flow cassette type

■ Model: AUXV004GLEH

Outdoor temperature		Indoor temperature						
		16°CDB	18°CDB	20°CDB	21°CDB	22°CDB	24°CDB	26°CDB
°CDB	°CWB	TC	TC	TC	TC	TC	TC	TC
-19.3	-20.0	0.7	0.7	0.7	0.7	0.7	0.7	0.7
-15.0	-16.0	0.8	0.8	0.8	0.8	0.8	0.8	0.8
-12.0	-13.0	0.9	0.9	0.9	0.9	0.9	0.9	0.9
-9.0	-10.0	1.0	1.0	1.0	1.0	1.0	1.0	0.9
-7.0	-8.0	1.0	1.0	1.0	1.0	1.1	1.1	1.0
-5.0	-6.0	1.1	1.1	1.1	1.1	1.1	1.1	1.0
-3.0	-4.0	1.1	1.1	1.1	1.1	1.2	1.1	1.0
-1.0	-2.0	1.2	1.2	1.2	1.2	1.2	1.1	1.0
0.0	-1.0	1.2	1.2	1.2	1.2	1.2	1.1	1.0
2.0	1.0	1.3	1.3	1.3	1.2	1.2	1.1	1.0
5.0	4.0	1.4	1.4	1.3	1.3	1.2	1.1	1.0
7.0	6.0	1.4	1.4	1.3	1.3	1.2	1.1	1.0
9.0	7.8	1.5	1.4	1.3	1.3	1.2	1.1	1.0
12.0	10.6	1.5	1.4	1.3	1.3	1.2	1.1	1.0
15.0	13.5	1.5	1.4	1.3	1.3	1.2	1.1	1.0

■ Model: AUXV007GLEH

Outdoor temperature		Indoor temperature						
		16°CDB	18°CDB	20°CDB	21°CDB	22°CDB	24°CDB	26°CDB
°CDB	°CWB	TC	TC	TC	TC	TC	TC	TC
-19.3	-20.0	1.5	1.4	1.4	1.4	1.4	1.4	1.4
-15.0	-16.0	1.7	1.7	1.7	1.7	1.7	1.7	1.7
-12.0	-13.0	1.9	1.9	1.9	1.8	1.8	1.8	1.8
-9.0	-10.0	2.1	2.1	2.0	2.0	2.0	2.0	2.0
-7.0	-8.0	2.2	2.2	2.2	2.2	2.2	2.1	2.1
-5.0	-6.0	2.3	2.3	2.3	2.3	2.3	2.3	2.2
-3.0	-4.0	2.4	2.4	2.4	2.4	2.4	2.4	2.2
-1.0	-2.0	2.6	2.6	2.5	2.5	2.5	2.4	2.2
0.0	-1.0	2.6	2.6	2.6	2.6	2.6	2.4	2.2
2.0	1.0	2.8	2.8	2.7	2.7	2.6	2.4	2.2
5.0	4.0	3.0	3.0	2.8	2.7	2.6	2.4	2.2
7.0	6.0	3.1	3.0	2.8	2.7	2.6	2.4	2.2
9.0	7.8	3.2	3.0	2.8	2.7	2.6	2.4	2.2
12.0	10.6	3.2	3.0	2.8	2.7	2.6	2.4	2.2
15.0	13.5	3.2	3.0	2.8	2.7	2.6	2.4	2.2

■ Model: AUXV009GLEH

Outdoor temperature		Indoor temperature						
		16°CDB	18°CDB	20°CDB	21°CDB	22°CDB	24°CDB	26°CDB
°CDB	°CWB	TC	TC	TC	TC	TC	TC	TC
-19.3	-20.0	1.7	1.7	1.7	1.7	1.6	1.6	1.6
-15.0	-16.0	1.9	1.9	1.9	1.9	1.9	1.9	1.9
-12.0	-13.0	2.1	2.1	2.1	2.1	2.1	2.1	2.1
-9.0	-10.0	2.4	2.3	2.3	2.3	2.3	2.3	2.3
-7.0	-8.0	2.5	2.5	2.5	2.5	2.5	2.4	2.4
-5.0	-6.0	2.6	2.6	2.6	2.6	2.6	2.6	2.5
-3.0	-4.0	2.8	2.8	2.8	2.8	2.7	2.7	2.5
-1.0	-2.0	2.9	2.9	2.9	2.9	2.9	2.7	2.5
0.0	-1.0	3.0	3.0	3.0	3.0	3.0	2.7	2.5
2.0	1.0	3.2	3.1	3.1	3.1	3.0	2.8	2.5
5.0	4.0	3.4	3.4	3.2	3.1	3.0	2.8	2.6
7.0	6.0	3.5	3.4	3.2	3.1	3.0	2.8	2.6
9.0	7.8	3.6	3.4	3.2	3.1	3.0	2.8	2.6
12.0	10.6	3.6	3.4	3.2	3.1	3.0	2.8	2.6
15.0	13.5	3.6	3.4	3.2	3.1	3.0	2.8	2.6

Model: AUXV012GLEH

Outdoor temperature		Indoor temperature						
		16°CDB	18°CDB	20°CDB	21°CDB	22°CDB	24°CDB	26°CDB
°CDB	°CWB	TC	TC	TC	TC	TC	TC	TC
-19.3	-20.0	2.1	2.1	2.1	2.1	2.1	2.1	2.0
-15.0	-16.0	2.4	2.4	2.4	2.4	2.4	2.4	2.4
-12.0	-13.0	2.7	2.7	2.7	2.6	2.6	2.6	2.6
-9.0	-10.0	2.9	2.9	2.9	2.9	2.9	2.9	2.9
-7.0	-8.0	3.1	3.1	3.1	3.1	3.1	3.1	3.0
-5.0	-6.0	3.3	3.3	3.3	3.3	3.3	3.2	3.1
-3.0	-4.0	3.5	3.5	3.5	3.4	3.4	3.4	3.2
-1.0	-2.0	3.7	3.7	3.6	3.6	3.6	3.4	3.2
0.0	-1.0	3.8	3.7	3.7	3.7	3.7	3.4	3.2
2.0	1.0	4.0	3.9	3.9	3.8	3.7	3.4	3.2
5.0	4.0	4.3	4.2	4.0	3.9	3.7	3.5	3.2
7.0	6.0	4.4	4.3	4.0	3.9	3.7	3.5	3.2
9.0	7.8	4.5	4.3	4.0	3.9	3.7	3.5	3.2
12.0	10.6	4.5	4.3	4.0	3.9	3.7	3.5	3.2
15.0	13.5	4.5	4.3	4.0	3.9	3.7	3.5	3.2

Model: AUXV014GLEH

Outdoor temperature		Indoor temperature						
		16°CDB	18°CDB	20°CDB	21°CDB	22°CDB	24°CDB	26°CDB
°CDB	°CWB	TC	TC	TC	TC	TC	TC	TC
-19.3	-20.0	2.6	2.6	2.6	2.6	2.6	2.6	2.6
-15.0	-16.0	3.0	3.0	3.0	3.0	3.0	3.0	3.0
-12.0	-13.0	3.3	3.3	3.3	3.3	3.3	3.3	3.3
-9.0	-10.0	3.7	3.7	3.6	3.6	3.6	3.6	3.6
-7.0	-8.0	3.9	3.9	3.9	3.9	3.8	3.8	3.8
-5.0	-6.0	4.1	4.1	4.1	4.1	4.1	4.0	3.9
-3.0	-4.0	4.4	4.3	4.3	4.3	4.3	4.3	4.0
-1.0	-2.0	4.6	4.6	4.5	4.5	4.5	4.3	4.0
0.0	-1.0	4.7	4.7	4.7	4.6	4.6	4.3	4.0
2.0	1.0	5.0	4.9	4.9	4.8	4.6	4.3	4.0
5.0	4.0	5.3	5.3	5.0	4.8	4.7	4.3	4.0
7.0	6.0	5.5	5.3	5.0	4.8	4.7	4.3	4.0
9.0	7.8	5.7	5.3	5.0	4.8	4.7	4.3	4.0
12.0	10.6	5.7	5.3	5.0	4.8	4.7	4.3	4.0
15.0	13.5	5.7	5.3	5.0	4.8	4.7	4.3	4.0

Model: AUXV018GLEH

Outdoor temperature		Indoor temperature						
		16°CDB	18°CDB	20°CDB	21°CDB	22°CDB	24°CDB	26°CDB
°CDB	°CWB	TC	TC	TC	TC	TC	TC	TC
-19.3	-20.0	3.3	3.3	3.3	3.3	3.2	3.2	3.2
-15.0	-16.0	3.8	3.8	3.8	3.8	3.8	3.7	3.7
-12.0	-13.0	4.2	4.2	4.2	4.2	4.2	4.1	4.1
-9.0	-10.0	4.6	4.5	4.6	4.6	4.6	4.5	4.5
-7.0	-8.0	4.9	4.9	4.9	4.8	4.8	4.8	4.8
-5.0	-6.0	5.2	5.2	5.2	5.1	5.1	5.1	5.0
-3.0	-4.0	5.5	5.5	5.5	5.4	5.4	5.4	5.0
-1.0	-2.0	5.8	5.8	5.8	5.7	5.7	5.4	5.0
0.0	-1.0	5.9	5.9	5.9	5.8	5.8	5.4	5.0
2.0	1.0	6.2	6.2	6.2	6.0	5.8	5.4	5.0
5.0	4.0	6.7	6.7	6.3	6.1	5.9	5.5	5.0
7.0	6.0	7.0	6.7	6.3	6.1	5.9	5.5	5.0
9.0	7.8	7.1	6.7	6.3	6.1	5.9	5.5	5.0
12.0	10.6	7.1	6.7	6.3	6.1	5.9	5.5	5.0
15.0	13.5	7.7	6.7	6.3	6.1	5.9	5.5	5.0

Model: AUXV024GLEH

Outdoor temperature		Indoor temperature						
		16°CDB	18°CDB	20°CDB	21°CDB	22°CDB	24°CDB	26°CDB
°CDB	°CWB	TC	TC	TC	TC	TC	TC	TC
-19.3	-20.0	4.2	4.1	4.1	4.1	4.1	4.1	4.1
-15.0	-16.0	4.8	4.8	4.8	4.8	4.8	4.7	4.7
-12.0	-13.0	5.4	5.3	5.3	5.3	5.3	5.3	5.2
-9.0	-10.0	5.9	5.9	5.8	5.8	5.8	5.8	5.7
-7.0	-8.0	6.2	6.2	6.2	6.2	6.1	6.1	6.1
-5.0	-6.0	6.6	6.6	6.6	6.5	6.5	6.5	6.3
-3.0	-4.0	7.0	6.9	6.9	6.9	6.9	6.8	6.3
-1.0	-2.0	7.4	7.3	7.3	7.2	7.2	6.9	6.3
0.0	-1.0	7.5	7.5	7.4	7.4	7.4	6.9	6.3
2.0	1.0	7.9	7.9	7.8	7.7	7.4	6.9	6.3
5.0	4.0	8.5	8.5	8.0	7.7	7.5	6.9	6.4
7.0	6.0	8.9	8.5	8.0	7.7	7.5	6.9	6.4
9.0	7.8	9.1	8.5	8.0	7.7	7.5	6.9	6.4
12.0	10.6	9.1	8.5	8.0	7.7	7.5	6.9	6.4
15.0	13.5	9.1	8.5	8.0	7.7	7.5	6.9	6.4

3-6. Low static pressure duct (Mini duct) type

■ Model: ARXK004GLGH

Outdoor temperature		Indoor temperature						
		16°CDB	18°CDB	20°CDB	21°CDB	22°CDB	24°CDB	26°CDB
°CDB	°CWB	TC	TC	TC	TC	TC	TC	TC
-19.3	-20.0	0.7	0.7	0.7	0.7	0.7	0.7	0.7
-15.0	-16.0	0.8	0.8	0.8	0.8	0.8	0.8	0.8
-12.0	-13.0	0.9	0.9	0.9	0.9	0.9	0.9	0.9
-9.0	-10.0	1.0	1.0	0.9	0.9	0.9	0.9	0.9
-7.0	-8.0	1.0	1.0	1.0	1.0	1.0	1.0	1.0
-5.0	-6.0	1.1	1.1	1.1	1.1	1.1	1.1	1.0
-3.0	-4.0	1.1	1.1	1.1	1.1	1.1	1.1	1.0
-1.0	-2.0	1.2	1.2	1.2	1.2	1.2	1.1	1.0
0.0	-1.0	1.2	1.2	1.2	1.2	1.2	1.1	1.0
2.0	1.0	1.3	1.3	1.3	1.2	1.2	1.1	1.0
5.0	4.0	1.4	1.4	1.3	1.3	1.2	1.1	1.0
7.0	6.0	1.4	1.4	1.3	1.3	1.2	1.1	1.0
9.0	7.8	1.5	1.4	1.3	1.3	1.2	1.1	1.0
12.0	10.6	1.5	1.4	1.3	1.3	1.2	1.1	1.0
15.0	13.5	1.5	1.4	1.3	1.3	1.2	1.1	1.0

■ Model: ARXK007GLGH

Outdoor temperature		Indoor temperature						
		16°CDB	18°CDB	20°CDB	21°CDB	22°CDB	24°CDB	26°CDB
°CDB	°CWB	TC	TC	TC	TC	TC	TC	TC
-19.3	-20.0	1.5	1.4	1.4	1.4	1.4	1.4	1.4
-15.0	-16.0	1.7	1.7	1.7	1.7	1.7	1.7	1.7
-12.0	-13.0	1.9	1.9	1.9	1.8	1.8	1.8	1.8
-9.0	-10.0	2.1	2.1	2.0	2.0	2.0	2.0	2.0
-7.0	-8.0	2.2	2.2	2.2	2.2	2.2	2.1	2.1
-5.0	-6.0	2.3	2.3	2.3	2.3	2.3	2.3	2.2
-3.0	-4.0	2.4	2.4	2.4	2.4	2.4	2.4	2.2
-1.0	-2.0	2.6	2.6	2.5	2.5	2.5	2.4	2.2
0.0	-1.0	2.6	2.6	2.6	2.6	2.6	2.4	2.2
2.0	1.0	2.8	2.8	2.7	2.7	2.6	2.4	2.2
5.0	4.0	3.0	3.0	2.8	2.7	2.6	2.4	2.2
7.0	6.0	3.1	3.0	2.8	2.7	2.6	2.4	2.2
9.0	7.8	3.2	3.0	2.8	2.7	2.6	2.4	2.2
12.0	10.6	3.2	3.0	2.8	2.7	2.6	2.4	2.2
15.0	13.5	3.2	3.0	2.8	2.7	2.6	2.4	2.2

■ Model: ARXK009GLGH

Outdoor temperature		Indoor temperature						
		16°CDB	18°CDB	20°CDB	21°CDB	22°CDB	24°CDB	26°CDB
°CDB	°CWB	TC	TC	TC	TC	TC	TC	TC
-19.3	-20.0	1.7	1.7	1.7	1.7	1.6	1.6	1.6
-15.0	-16.0	1.9	1.9	1.9	1.9	1.9	1.9	1.9
-12.0	-13.0	2.1	2.1	2.1	2.1	2.1	2.1	2.1
-9.0	-10.0	2.4	2.3	2.3	2.3	2.3	2.3	2.3
-7.0	-8.0	2.5	2.5	2.5	2.5	2.5	2.4	2.4
-5.0	-6.0	2.6	2.6	2.6	2.6	2.6	2.6	2.5
-3.0	-4.0	2.8	2.8	2.8	2.8	2.7	2.7	2.5
-1.0	-2.0	2.9	2.9	2.9	2.9	2.9	2.7	2.5
0.0	-1.0	3.0	3.0	3.0	3.0	3.0	2.7	2.5
2.0	1.0	3.2	3.1	3.1	3.1	3.0	2.8	2.5
5.0	4.0	3.4	3.4	3.2	3.1	3.0	2.8	2.6
7.0	6.0	3.5	3.4	3.2	3.1	3.0	2.8	2.6
9.0	7.8	3.6	3.4	3.2	3.1	3.0	2.8	2.6
12.0	10.6	3.6	3.4	3.2	3.1	3.0	2.8	2.6
15.0	13.5	3.6	3.4	3.2	3.1	3.0	2.8	2.6

Model: ARXK012GLGH

Outdoor temperature		Indoor temperature						
		16°CDB	18°CDB	20°CDB	21°CDB	22°CDB	24°CDB	26°CDB
°CDB	°CWB	TC	TC	TC	TC	TC	TC	TC
-19.3	-20.0	2.1	2.1	2.1	2.1	2.1	2.1	2.0
-15.0	-16.0	2.4	2.4	2.4	2.4	2.4	2.4	2.4
-12.0	-13.0	2.7	2.7	2.7	2.6	2.6	2.6	2.6
-9.0	-10.0	2.9	2.9	2.9	2.9	2.9	2.9	2.9
-7.0	-8.0	3.1	3.1	3.1	3.1	3.1	3.1	3.0
-5.0	-6.0	3.3	3.3	3.3	3.3	3.3	3.2	3.1
-3.0	-4.0	3.5	3.5	3.5	3.4	3.4	3.4	3.2
-1.0	-2.0	3.7	3.7	3.6	3.6	3.6	3.4	3.2
0.0	-1.0	3.8	3.7	3.7	3.7	3.7	3.4	3.2
2.0	1.0	4.0	3.9	3.9	3.8	3.7	3.4	3.2
5.0	4.0	4.3	4.2	4.0	3.9	3.7	3.5	3.2
7.0	6.0	4.4	4.3	4.0	3.9	3.7	3.5	3.2
9.0	7.8	4.5	4.3	4.0	3.9	3.7	3.5	3.2
12.0	10.6	4.5	4.3	4.0	3.9	3.7	3.5	3.2
15.0	13.5	4.5	4.3	4.0	3.9	3.7	3.5	3.2

Model: ARXK014GLGH

Outdoor temperature		Indoor temperature						
		16°CDB	18°CDB	20°CDB	21°CDB	22°CDB	24°CDB	26°CDB
°CDB	°CWB	TC	TC	TC	TC	TC	TC	TC
-19.3	-20.0	2.6	2.6	2.6	2.6	2.6	2.6	2.6
-15.0	-16.0	3.0	3.0	3.0	3.0	3.0	3.0	3.0
-12.0	-13.0	3.3	3.3	3.3	3.3	3.3	3.3	3.3
-9.0	-10.0	3.7	3.7	3.6	3.6	3.6	3.6	3.6
-7.0	-8.0	3.9	3.9	3.9	3.9	3.8	3.8	3.8
-5.0	-6.0	4.1	4.1	4.1	4.1	4.1	4.0	3.9
-3.0	-4.0	4.4	4.3	4.3	4.3	4.3	4.3	4.0
-1.0	-2.0	4.6	4.6	4.5	4.5	4.5	4.3	4.0
0.0	-1.0	4.7	4.7	4.7	4.6	4.6	4.3	4.0
2.0	1.0	5.0	4.9	4.9	4.8	4.6	4.3	4.0
5.0	4.0	5.3	5.3	5.0	4.8	4.7	4.3	4.0
7.0	6.0	5.5	5.3	5.0	4.8	4.7	4.3	4.0
9.0	7.8	5.7	5.3	5.0	4.8	4.7	4.3	4.0
12.0	10.6	5.7	5.3	5.0	4.8	4.7	4.3	4.0
15.0	13.5	5.7	5.3	5.0	4.8	4.7	4.3	4.0

Model: ARXK018GLGH

Outdoor temperature		Indoor temperature						
		16°CDB	18°CDB	20°CDB	21°CDB	22°CDB	24°CDB	26°CDB
°CDB	°CWB	TC	TC	TC	TC	TC	TC	TC
-19.3	-20.0	3.3	3.3	3.3	3.3	3.2	3.2	3.2
-15.0	-16.0	3.8	3.8	3.8	3.8	3.8	3.7	3.7
-12.0	-13.0	4.2	4.2	4.2	4.2	4.2	4.1	4.1
-9.0	-10.0	4.6	4.6	4.6	4.6	4.6	4.5	4.5
-7.0	-8.0	4.9	4.9	4.9	4.9	4.8	4.8	4.8
-5.0	-6.0	5.2	5.2	5.2	5.1	5.1	5.1	5.0
-3.0	-4.0	5.5	5.5	5.4	5.4	5.4	5.4	5.0
-1.0	-2.0	5.8	5.8	5.7	5.7	5.7	5.4	5.0
0.0	-1.0	5.9	5.9	5.9	5.8	5.8	5.4	5.0
2.0	1.0	6.2	6.2	6.2	6.0	5.8	5.4	5.0
5.0	4.0	6.7	6.7	6.3	6.1	5.9	5.5	5.0
7.0	6.0	7.0	6.7	6.3	6.1	5.9	5.5	5.0
9.0	7.8	7.1	6.7	6.3	6.1	5.9	5.5	5.0
12.0	10.6	7.1	6.7	6.3	6.1	5.9	5.5	5.0
15.0	13.5	7.1	6.7	6.3	6.1	5.9	5.5	5.0

Model: ARXK024GLGH

Outdoor temperature		Indoor temperature						
		16°CDB	18°CDB	20°CDB	21°CDB	22°CDB	24°CDB	26°CDB
°CDB	°CWB	TC	TC	TC	TC	TC	TC	TC
-19.3	-20.0	4.2	4.1	4.1	4.1	4.1	4.1	4.1
-15.0	-16.0	4.8	4.8	4.8	4.8	4.8	4.7	4.7
-12.0	-13.0	5.4	5.3	5.3	5.3	5.3	5.3	5.2
-9.0	-10.0	5.9	5.9	5.8	5.8	5.8	5.8	5.7
-7.0	-8.0	6.2	6.2	6.2	6.2	6.1	6.1	6.1
-5.0	-6.0	6.6	6.6	6.6	6.5	6.5	6.5	6.3
-3.0	-4.0	7.0	6.9	6.9	6.9	6.9	6.8	6.3
-1.0	-2.0	7.4	7.3	7.3	7.2	7.2	6.9	6.3
0.0	-1.0	7.5	7.5	7.4	7.4	7.4	6.9	6.3
2.0	1.0	7.9	7.9	7.8	7.7	7.4	6.9	6.3
5.0	4.0	8.5	8.5	8.0	7.7	7.5	6.9	6.4
7.0	6.0	8.9	8.5	8.0	7.7	7.5	6.9	6.4
9.0	7.8	9.1	8.5	8.0	7.7	7.5	6.9	6.4
12.0	10.6	9.1	8.5	8.0	7.7	7.5	6.9	6.4
15.0	13.5	9.1	8.5	8.0	7.7	7.5	6.9	6.4

3-7. Low static pressure duct (Slim duct)/Slim concealed floor type

■ Model: ARXD007GLEH

Outdoor temperature		Indoor temperature						
		16°CDB	18°CDB	20°CDB	21°CDB	22°CDB	24°CDB	26°CDB
°CDB	°CWB	TC	TC	TC	TC	TC	TC	TC
-19.3	-20.0	1.5	1.4	1.4	1.4	1.4	1.4	1.4
-15.0	-16.0	1.7	1.7	1.7	1.7	1.7	1.7	1.7
-12.0	-13.0	1.9	1.9	1.9	1.8	1.8	1.8	1.8
-9.0	-10.0	2.1	2.1	2.0	2.0	2.0	2.0	2.0
-7.0	-8.0	2.2	2.2	2.2	2.2	2.2	2.1	2.1
-5.0	-6.0	2.3	2.3	2.3	2.3	2.3	2.3	2.2
-3.0	-4.0	2.4	2.4	2.4	2.4	2.4	2.4	2.2
-1.0	-2.0	2.6	2.6	2.5	2.5	2.5	2.4	2.2
0.0	-1.0	2.6	2.6	2.6	2.6	2.6	2.4	2.2
2.0	1.0	2.8	2.8	2.7	2.7	2.6	2.4	2.2
5.0	4.0	3.0	3.0	2.8	2.7	2.6	2.4	2.2
7.0	6.0	3.1	3.0	2.8	2.7	2.6	2.4	2.2
9.0	7.8	3.2	3.0	2.8	2.7	2.6	2.4	2.2
12.0	10.6	3.2	3.0	2.8	2.7	2.6	2.4	2.2
15.0	13.5	3.2	3.0	2.8	2.7	2.6	2.4	2.2

■ Model: ARXD009GLEH

Outdoor temperature		Indoor temperature						
		16°CDB	18°CDB	20°CDB	21°CDB	22°CDB	24°CDB	26°CDB
°CDB	°CWB	TC	TC	TC	TC	TC	TC	TC
-19.3	-20.0	1.7	1.7	1.7	1.7	1.6	1.6	1.6
-15.0	-16.0	1.9	1.9	1.9	1.9	1.9	1.9	1.9
-12.0	-13.0	2.1	2.1	2.1	2.1	2.1	2.1	2.1
-9.0	-10.0	2.4	2.3	2.3	2.3	2.3	2.3	2.3
-7.0	-8.0	2.5	2.5	2.5	2.5	2.5	2.4	2.4
-5.0	-6.0	2.6	2.6	2.6	2.6	2.6	2.6	2.5
-3.0	-4.0	2.8	2.8	2.8	2.8	2.7	2.7	2.5
-1.0	-2.0	2.9	2.9	2.9	2.9	2.9	2.7	2.5
0.0	-1.0	3.0	3.0	3.0	3.0	3.0	2.7	2.5
2.0	1.0	3.2	3.1	3.1	3.1	3.0	2.8	2.5
5.0	4.0	3.4	3.4	3.2	3.1	3.0	2.8	2.6
7.0	6.0	3.5	3.4	3.2	3.1	3.0	2.8	2.6
9.0	7.8	3.6	3.4	3.2	3.1	3.0	2.8	2.6
12.0	10.6	3.6	3.4	3.2	3.1	3.0	2.8	2.6
15.0	13.5	3.6	3.4	3.2	3.1	3.0	2.8	2.6

Model: ARXD012GLEH

Outdoor temperature		Indoor temperature						
		16°CDB	18°CDB	20°CDB	21°CDB	22°CDB	24°CDB	26°CDB
°CDB	°CWB	TC	TC	TC	TC	TC	TC	TC
-19.3	-20.0	2.1	2.1	2.1	2.1	2.1	2.1	2.0
-15.0	-16.0	2.4	2.4	2.4	2.4	2.4	2.4	2.4
-12.0	-13.0	2.7	2.7	2.7	2.6	2.6	2.6	2.6
-9.0	-10.0	2.9	2.9	2.9	2.9	2.9	2.9	2.9
-7.0	-8.0	3.1	3.1	3.1	3.1	3.1	3.1	3.0
-5.0	-6.0	3.3	3.3	3.3	3.3	3.3	3.2	3.1
-3.0	-4.0	3.5	3.5	3.5	3.4	3.4	3.4	3.2
-1.0	-2.0	3.7	3.7	3.6	3.6	3.6	3.4	3.2
0.0	-1.0	3.8	3.7	3.7	3.7	3.7	3.4	3.2
2.0	1.0	4.0	3.9	3.9	3.8	3.7	3.4	3.2
5.0	4.0	4.3	4.2	4.0	3.9	3.7	3.5	3.2
7.0	6.0	4.4	4.3	4.0	3.9	3.7	3.5	3.2
9.0	7.8	4.5	4.3	4.0	3.9	3.7	3.5	3.2
12.0	10.6	4.5	4.3	4.0	3.9	3.7	3.5	3.2
15.0	13.5	4.5	4.3	4.0	3.9	3.7	3.5	3.2

Model: ARXD014GLEH

Outdoor temperature		Indoor temperature						
		16°CDB	18°CDB	20°CDB	21°CDB	22°CDB	24°CDB	26°CDB
°CDB	°CWB	TC	TC	TC	TC	TC	TC	TC
-19.3	-20.0	2.6	2.6	2.6	2.6	2.6	2.6	2.6
-15.0	-16.0	3.0	3.0	3.0	3.0	3.0	3.0	3.0
-12.0	-13.0	3.3	3.3	3.3	3.3	3.3	3.3	3.3
-9.0	-10.0	3.7	3.7	3.6	3.6	3.6	3.6	3.6
-7.0	-8.0	3.9	3.9	3.9	3.9	3.8	3.8	3.8
-5.0	-6.0	4.1	4.1	4.1	4.1	4.1	4.0	3.9
-3.0	-4.0	4.4	4.3	4.3	4.3	4.3	4.3	4.0
-1.0	-2.0	4.6	4.6	4.5	4.5	4.5	4.3	4.0
0.0	-1.0	4.7	4.7	4.7	4.6	4.6	4.3	4.0
2.0	1.0	5.0	4.9	4.9	4.8	4.6	4.3	4.0
5.0	4.0	5.3	5.3	5.0	4.8	4.7	4.3	4.0
7.0	6.0	5.5	5.3	5.0	4.8	4.7	4.3	4.0
9.0	7.8	5.7	5.3	5.0	4.8	4.7	4.3	4.0
12.0	10.6	5.7	5.3	5.0	4.8	4.7	4.3	4.0
15.0	13.5	5.7	5.3	5.0	4.8	4.7	4.3	4.0

Model: ARXD018GLEH

Outdoor temperature		Indoor temperature						
		16°CDB	18°CDB	20°CDB	21°CDB	22°CDB	24°CDB	26°CDB
°CDB	°CWB	TC	TC	TC	TC	TC	TC	TC
-19.3	-20.0	3.3	3.3	3.3	3.3	3.2	3.2	3.2
-15.0	-16.0	3.8	3.8	3.8	3.8	3.8	3.7	3.7
-12.0	-13.0	4.2	4.2	4.2	4.2	4.2	4.1	4.1
-9.0	-10.0	4.6	4.6	4.6	4.6	4.6	4.5	4.5
-7.0	-8.0	4.9	4.9	4.9	4.9	4.8	4.8	4.8
-5.0	-6.0	5.2	5.2	5.2	5.1	5.1	5.1	5.0
-3.0	-4.0	5.5	5.5	5.4	5.4	5.4	5.4	5.0
-1.0	-2.0	5.8	5.8	5.7	5.7	5.7	5.4	5.0
0.0	-1.0	5.9	5.9	5.9	5.8	5.8	5.4	5.0
2.0	1.0	6.2	6.2	6.2	6.0	5.8	5.4	5.0
5.0	4.0	6.7	6.7	6.3	6.1	5.9	5.5	5.0
7.0	6.0	7.0	6.7	6.3	6.1	5.9	5.5	5.0
9.0	7.8	7.1	6.7	6.3	6.1	5.9	5.5	5.0
12.0	10.6	7.1	6.7	6.3	6.1	5.9	5.5	5.0
15.0	13.5	7.1	6.7	6.3	6.1	5.9	5.5	5.0

Model: ARXD024GLEH

Outdoor temperature		Indoor temperature						
		16°CDB	18°CDB	20°CDB	21°CDB	22°CDB	24°CDB	26°CDB
°CDB	°CWB	TC	TC	TC	TC	TC	TC	TC
-19.3	-20.0	4.2	4.1	4.1	4.1	4.1	4.1	4.1
-15.0	-16.0	4.8	4.8	4.8	4.8	4.8	4.7	4.7
-12.0	-13.0	5.4	5.3	5.3	5.3	5.3	5.3	5.2
-9.0	-10.0	5.9	5.9	5.8	5.8	5.8	5.8	5.7
-7.0	-8.0	6.2	6.2	6.2	6.2	6.1	6.1	6.1
-5.0	-6.0	6.6	6.6	6.6	6.5	6.5	6.5	6.3
-3.0	-4.0	7.0	6.9	6.9	6.9	6.9	6.8	6.3
-1.0	-2.0	7.4	7.3	7.3	7.2	7.2	6.9	6.3
0.0	-1.0	7.5	7.5	7.4	7.4	7.4	6.9	6.3
2.0	1.0	7.9	7.9	7.8	7.7	7.4	6.9	6.3
5.0	4.0	8.5	8.5	8.0	7.7	7.5	6.9	6.4
7.0	6.0	8.9	8.5	8.0	7.7	7.5	6.9	6.4
9.0	7.8	9.1	8.5	8.0	7.7	7.5	6.9	6.4
12.0	10.6	9.1	8.5	8.0	7.7	7.5	6.9	6.4
15.0	13.5	9.1	8.5	8.0	7.7	7.5	6.9	6.4

3-8. Low static pressure duct (High efficiency) type

■ Model: ARXP018GLFH

Outdoor temperature		Indoor temperature						
		16°CDB	18°CDB	20°CDB	21°CDB	22°CDB	24°CDB	26°CDB
°CDB	°CWB	TC	TC	TC	TC	TC	TC	TC
-19.3	-20.0	3.3	3.3	3.3	3.3	3.2	3.2	3.2
-15.0	-16.0	3.8	3.8	3.8	3.8	3.8	3.7	3.7
-12.0	-13.0	4.2	4.2	4.2	4.2	4.2	4.1	4.1
-9.0	-10.0	4.6	4.6	4.6	4.6	4.6	4.5	4.5
-7.0	-8.0	4.9	4.9	4.9	4.9	4.8	4.8	4.8
-5.0	-6.0	5.2	5.2	5.2	5.1	5.1	5.1	5.0
-3.0	-4.0	5.5	5.5	5.4	5.4	5.4	5.4	5.0
-1.0	-2.0	5.8	5.8	5.7	5.7	5.7	5.4	5.0
0.0	-1.0	5.9	5.9	5.9	5.8	5.8	5.4	5.0
2.0	1.0	6.2	6.2	6.2	6.0	5.8	5.4	5.0
5.0	4.0	6.7	6.7	6.3	6.1	5.9	5.5	5.0
7.0	6.0	7.0	6.7	6.3	6.1	5.9	5.5	5.0
9.0	7.8	7.1	6.7	6.3	6.1	5.9	5.5	5.0
12.0	10.6	7.1	6.7	6.3	6.1	5.9	5.5	5.0
15.0	13.5	7.1	6.7	6.3	6.1	5.9	5.5	5.0

■ Model: ARXP030GLFH

Outdoor temperature		Indoor temperature						
		16°CDB	18°CDB	20°CDB	21°CDB	22°CDB	24°CDB	26°CDB
°CDB	°CWB	TC	TC	TC	TC	TC	TC	TC
-19.3	-20.0	5.2	5.2	5.2	5.2	5.1	5.1	5.1
-15.0	-16.0	6.0	6.0	6.0	6.0	6.0	5.9	5.9
-12.0	-13.0	6.7	6.7	6.6	6.6	6.6	6.6	6.5
-9.0	-10.0	7.4	7.3	7.3	7.3	7.2	7.2	7.2
-7.0	-8.0	7.8	7.8	7.7	7.7	7.7	7.7	7.6
-5.0	-6.0	8.3	8.2	8.2	8.2	8.1	8.1	7.9
-3.0	-4.0	8.7	8.7	8.6	8.6	8.6	8.5	7.9
-1.0	-2.0	9.2	9.1	9.1	9.0	9.0	8.6	7.9
0.0	-1.0	9.4	9.4	9.3	9.3	9.2	8.6	7.9
2.0	1.0	9.9	9.8	9.8	9.6	9.3	8.6	7.9
5.0	4.0	10.6	10.6	10.0	9.7	9.3	8.7	8.0
7.0	6.0	11.1	10.6	10.0	9.7	9.3	8.7	8.0
9.0	7.8	11.3	10.6	10.0	9.7	9.3	8.7	8.0
12.0	10.6	11.3	10.7	10.0	9.7	9.3	8.7	8.0
15.0	13.5	11.3	10.7	10.0	9.7	9.3	8.7	8.0

3-9. Medium static pressure duct type

■ Model: ARXA024GLEH

Outdoor temperature		Indoor temperature						
		16°CDB	18°CDB	20°CDB	21°CDB	22°CDB	24°CDB	26°CDB
°CDB	°CWB	TC	TC	TC	TC	TC	TC	TC
-19.3	-20.0	4.2	4.1	4.1	4.1	4.1	4.1	4.1
-15.0	-16.0	4.8	4.8	4.8	4.8	4.8	4.7	4.7
-12.0	-13.0	5.4	5.3	5.3	5.3	5.3	5.3	5.2
-9.0	-10.0	5.9	5.9	5.8	5.8	5.8	5.8	5.7
-7.0	-8.0	6.2	6.2	6.2	6.2	6.1	6.1	6.1
-5.0	-6.0	6.6	6.6	6.6	6.5	6.5	6.5	6.3
-3.0	-4.0	7.0	6.9	6.9	6.9	6.9	6.8	6.3
-1.0	-2.0	7.4	7.3	7.3	7.2	7.2	6.9	6.3
0.0	-1.0	7.5	7.5	7.4	7.4	7.4	6.9	6.3
2.0	1.0	7.9	7.9	7.8	7.7	7.4	6.9	6.3
5.0	4.0	8.5	8.5	8.0	7.7	7.5	6.9	6.4
7.0	6.0	8.9	8.5	8.0	7.7	7.5	6.9	6.4
9.0	7.8	9.1	8.5	8.0	7.7	7.5	6.9	6.4
12.0	10.6	9.1	8.5	8.0	7.7	7.5	6.9	6.4
15.0	13.5	9.1	8.5	8.0	7.7	7.5	6.9	6.4

■ Model: ARXA030GLEH

Outdoor temperature		Indoor temperature						
		16°CDB	18°CDB	20°CDB	21°CDB	22°CDB	24°CDB	26°CDB
°CDB	°CWB	TC	TC	TC	TC	TC	TC	TC
-19.3	-20.0	5.2	5.2	5.2	5.2	5.1	5.1	5.1
-15.0	-16.0	6.0	6.0	6.0	6.0	6.0	5.9	5.9
-12.0	-13.0	6.7	6.7	6.6	6.6	6.6	6.6	6.5
-9.0	-10.0	7.4	7.3	7.3	7.3	7.2	7.2	7.2
-7.0	-8.0	7.8	7.8	7.7	7.7	7.7	7.7	7.6
-5.0	-6.0	8.3	8.2	8.2	8.2	8.1	8.1	7.9
-3.0	-4.0	8.7	8.7	8.6	8.6	8.6	8.5	7.9
-1.0	-2.0	9.2	9.1	9.1	9.0	9.0	8.6	7.9
0.0	-1.0	9.4	9.4	9.3	9.3	9.2	8.6	7.9
2.0	1.0	9.9	9.8	9.8	9.6	9.3	8.6	7.9
5.0	4.0	10.6	10.6	10.0	9.7	9.3	8.7	8.0
7.0	6.0	11.1	10.6	10.0	9.7	9.3	8.7	8.0
9.0	7.8	11.3	10.6	10.0	9.7	9.3	8.7	8.0
12.0	10.6	11.3	10.7	10.0	9.7	9.3	8.7	8.0
15.0	13.5	11.3	10.7	10.0	9.7	9.3	8.7	8.0

■ Model: ARXA036GLEH

Outdoor temperature		Indoor temperature						
		16°CDB	18°CDB	20°CDB	21°CDB	22°CDB	24°CDB	26°CDB
°CDB	°CWB	TC	TC	TC	TC	TC	TC	TC
-19.3	-20.0	6.5	6.5	6.5	6.5	6.4	6.4	6.4
-15.0	-16.0	7.5	7.5	7.5	7.5	7.5	7.4	7.4
-12.0	-13.0	8.4	8.3	8.3	8.3	8.3	8.2	8.2
-9.0	-10.0	9.2	9.2	9.1	9.1	9.0	9.0	9.0
-7.0	-8.0	9.8	9.7	9.6	9.6	9.6	9.6	9.5
-5.0	-6.0	10.3	10.3	10.2	10.2	10.2	10.1	9.8
-3.0	-4.0	10.9	10.8	10.8	10.8	10.7	10.7	9.9
-1.0	-2.0	11.5	11.4	11.3	11.3	11.3	10.7	9.9
0.0	-1.0	11.8	11.7	11.6	11.6	11.5	10.7	9.9
2.0	1.0	12.4	12.3	12.2	12.0	11.6	10.8	9.9
5.0	4.0	13.3	13.2	12.5	12.1	11.7	10.8	10.0
7.0	6.0	13.8	13.3	12.5	12.1	11.7	10.8	10.0
9.0	7.8	14.2	13.3	12.5	12.1	11.7	10.8	10.0
12.0	10.6	14.2	13.3	12.5	12.1	11.7	10.8	10.0
15.0	13.5	14.2	13.3	12.5	12.1	11.7	10.8	10.0

■ Model: ARXA045GLEH

Outdoor temperature		Indoor temperature						
		16°CDB	18°CDB	20°CDB	21°CDB	22°CDB	24°CDB	26°CDB
°CDB	°CWB	TC	TC	TC	TC	TC	TC	TC
-19.3	-20.0	7.3	7.2	7.2	7.2	7.2	7.2	7.2
-15.0	-16.0	8.4	8.4	8.4	8.4	8.4	8.3	8.3
-12.0	-13.0	9.4	9.3	9.3	9.2	9.2	9.2	9.2
-9.0	-10.0	10.3	10.3	10.2	10.2	10.1	10.1	10.0
-7.0	-8.0	10.9	10.9	10.8	10.8	10.8	10.7	10.7
-5.0	-6.0	11.6	11.5	11.5	11.4	11.4	11.3	11.0
-3.0	-4.0	12.2	12.1	12.1	12.0	12.0	12.0	11.1
-1.0	-2.0	12.9	12.8	12.7	12.7	12.6	12.0	11.1
0.0	-1.0	13.2	13.1	13.0	13.0	12.9	12.0	11.1
2.0	1.0	13.9	13.8	13.7	13.4	13.0	12.0	11.1
5.0	4.0	14.9	14.8	14.0	13.5	13.1	12.1	11.2
7.0	6.0	15.5	14.9	14.0	13.5	13.1	12.1	11.2
9.0	7.8	15.9	14.9	14.0	13.5	13.1	12.1	11.2
12.0	10.6	15.9	14.9	14.0	13.5	13.1	12.1	11.2
15.0	13.5	15.9	14.9	14.0	13.5	13.1	12.1	11.2

3-10. High static pressure duct type

■ Model: ARXC036GTEH

Outdoor temperature		Indoor temperature						
		16°CDB	18°CDB	20°CDB	21°CDB	22°CDB	24°CDB	26°CDB
°CDB	°CWB	TC	TC	TC	TC	TC	TC	TC
-19.3	-20.0	6.5	6.5	6.5	6.5	6.4	6.4	6.4
-15.0	-16.0	7.5	7.5	7.5	7.5	7.5	7.4	7.4
-12.0	-13.0	8.4	8.3	8.3	8.3	8.3	8.2	8.2
-9.0	-10.0	9.2	9.2	9.1	9.1	9.0	9.0	9.0
-7.0	-8.0	9.8	9.7	9.6	9.6	9.6	9.6	9.5
-5.0	-6.0	10.3	10.3	10.2	10.2	10.2	10.1	9.8
-3.0	-4.0	10.9	10.8	10.8	10.8	10.7	10.7	9.9
-1.0	-2.0	11.5	11.4	11.3	11.3	11.3	10.7	9.9
0.0	-1.0	11.8	11.7	11.6	11.6	11.5	10.7	9.9
2.0	1.0	12.4	12.3	12.2	12.0	11.6	10.8	9.9
5.0	4.0	13.3	13.2	12.5	12.1	11.7	10.8	10.0
7.0	6.0	13.8	13.3	12.5	12.1	11.7	10.8	10.0
9.0	7.8	14.2	13.3	12.5	12.1	11.7	10.8	10.0
12.0	10.6	14.2	13.3	12.5	12.1	11.7	10.8	10.0
15.0	13.5	14.2	13.3	12.5	12.1	11.7	10.8	10.0

■ Model: ARXC045GTEH

Outdoor temperature		Indoor temperature						
		16°CDB	18°CDB	20°CDB	21°CDB	22°CDB	24°CDB	26°CDB
°CDB	°CWB	TC	TC	TC	TC	TC	TC	TC
-19.3	-20.0	7.3	7.2	7.2	7.2	7.2	7.2	7.2
-15.0	-16.0	8.4	8.4	8.4	8.4	8.4	8.3	8.3
-12.0	-13.0	9.4	9.3	9.3	9.2	9.2	9.2	9.2
-9.0	-10.0	10.3	10.3	10.2	10.2	10.1	10.1	10.0
-7.0	-8.0	10.9	10.9	10.8	10.8	10.8	10.7	10.7
-5.0	-6.0	11.6	11.5	11.5	11.4	11.4	11.3	11.0
-3.0	-4.0	12.2	12.1	12.1	12.0	12.0	12.0	11.1
-1.0	-2.0	12.9	12.8	12.7	12.7	12.6	12.0	11.1
0.0	-1.0	13.2	13.1	13.0	13.0	12.9	12.0	11.1
2.0	1.0	13.9	13.8	13.7	13.4	13.0	12.0	11.1
5.0	4.0	14.9	14.8	14.0	13.5	13.1	12.1	11.2
7.0	6.0	15.5	14.9	14.0	13.5	13.1	12.1	11.2
9.0	7.8	15.9	14.9	14.0	13.5	13.1	12.1	11.2
12.0	10.6	15.9	14.9	14.0	13.5	13.1	12.1	11.2
15.0	13.5	15.9	14.9	14.0	13.5	13.1	12.1	11.2

3-11. Compact floor type

■ Model: AG∗A004GCGH

Outdoor temperature		Indoor temperature						
		16°CDB	18°CDB	20°CDB	21°CDB	22°CDB	24°CDB	26°CDB
°CDB	°CWB	TC	TC	TC	TC	TC	TC	TC
-19.3	-20.0	0.7	0.7	0.7	0.7	0.7	0.7	0.7
-15.0	-16.0	0.8	0.8	0.8	0.8	0.8	0.8	0.8
-12.0	-13.0	0.9	0.9	0.9	0.9	0.9	0.9	0.9
-9.0	-10.0	1.0	1.0	0.9	0.9	0.9	0.9	0.9
-7.0	-8.0	1.0	1.0	1.0	1.0	1.0	1.0	1.0
-5.0	-6.0	1.1	1.1	1.1	1.1	1.1	1.1	1.0
-3.0	-4.0	1.1	1.1	1.1	1.1	1.1	1.1	1.0
-1.0	-2.0	1.2	1.2	1.2	1.2	1.2	1.1	1.0
0.0	-1.0	1.2	1.2	1.2	1.2	1.2	1.1	1.0
2.0	1.0	1.3	1.3	1.3	1.2	1.2	1.1	1.0
5.0	4.0	1.4	1.4	1.3	1.3	1.2	1.1	1.0
7.0	6.0	1.4	1.4	1.3	1.3	1.2	1.1	1.0
9.0	7.8	1.5	1.4	1.3	1.3	1.2	1.1	1.0
12.0	10.6	1.5	1.4	1.3	1.3	1.2	1.1	1.0
15.0	13.5	1.5	1.4	1.3	1.3	1.2	1.1	1.0

■ Model: AG∗A007GCGH

Outdoor temperature		Indoor temperature						
		16°CDB	18°CDB	20°CDB	21°CDB	22°CDB	24°CDB	26°CDB
°CDB	°CWB	TC	TC	TC	TC	TC	TC	TC
-19.3	-20.0	1.5	1.4	1.4	1.4	1.4	1.4	1.4
-15.0	-16.0	1.7	1.7	1.7	1.7	1.7	1.7	1.7
-12.0	-13.0	1.9	1.9	1.9	1.8	1.8	1.8	1.8
-9.0	-10.0	2.1	2.1	2.0	2.0	2.0	2.0	2.0
-7.0	-8.0	2.2	2.2	2.2	2.2	2.2	2.1	2.1
-5.0	-6.0	2.3	2.3	2.3	2.3	2.3	2.3	2.2
-3.0	-4.0	2.4	2.4	2.4	2.4	2.4	2.4	2.2
-1.0	-2.0	2.6	2.6	2.5	2.5	2.5	2.4	2.2
0.0	-1.0	2.6	2.6	2.6	2.6	2.6	2.4	2.2
2.0	1.0	2.8	2.8	2.7	2.7	2.6	2.4	2.2
5.0	4.0	3.0	3.0	2.8	2.7	2.6	2.4	2.2
7.0	6.0	3.1	3.0	2.8	2.7	2.6	2.4	2.2
9.0	7.8	3.2	3.0	2.8	2.7	2.6	2.4	2.2
12.0	10.6	3.2	3.0	2.8	2.7	2.6	2.4	2.2
15.0	13.5	3.2	3.0	2.8	2.7	2.6	2.4	2.2

■ Model: AG∗A009GCGH

Outdoor temperature		Indoor temperature						
		16°CDB	18°CDB	20°CDB	21°CDB	22°CDB	24°CDB	26°CDB
°CDB	°CWB	TC	TC	TC	TC	TC	TC	TC
-19.3	-20.0	1.7	1.7	1.7	1.7	1.6	1.6	1.6
-15.0	-16.0	1.9	1.9	1.9	1.9	1.9	1.9	1.9
-12.0	-13.0	2.1	2.1	2.1	2.1	2.1	2.1	2.1
-9.0	-10.0	2.4	2.3	2.3	2.3	2.3	2.3	2.3
-7.0	-8.0	2.5	2.5	2.5	2.5	2.5	2.4	2.4
-5.0	-6.0	2.6	2.6	2.6	2.6	2.6	2.6	2.5
-3.0	-4.0	2.8	2.8	2.8	2.8	2.7	2.7	2.5
-1.0	-2.0	2.9	2.9	2.9	2.9	2.9	2.7	2.5
0.0	-1.0	3.0	3.0	3.0	3.0	3.0	2.7	2.5
2.0	1.0	3.2	3.1	3.1	3.1	3.0	2.8	2.5
5.0	4.0	3.4	3.4	3.2	3.1	3.0	2.8	2.6
7.0	6.0	3.5	3.4	3.2	3.1	3.0	2.8	2.6
9.0	7.8	3.6	3.4	3.2	3.1	3.0	2.8	2.6
12.0	10.6	3.6	3.4	3.2	3.1	3.0	2.8	2.6
15.0	13.5	3.6	3.4	3.2	3.1	3.0	2.8	2.6

■ Model: AG∗A012GCGH

Outdoor temperature		Indoor temperature						
		16°CDB	18°CDB	20°CDB	21°CDB	22°CDB	24°CDB	26°CDB
°CDB	°CWB	TC	TC	TC	TC	TC	TC	TC
-19.3	-20.0	2.1	2.1	2.1	2.1	2.1	2.1	2.0
-15.0	-16.0	2.4	2.4	2.4	2.4	2.4	2.4	2.4
-12.0	-13.0	2.7	2.7	2.7	2.6	2.6	2.6	2.6
-9.0	-10.0	2.9	2.9	2.9	2.9	2.9	2.9	2.9
-7.0	-8.0	3.1	3.1	3.1	3.1	3.1	3.1	3.0
-5.0	-6.0	3.3	3.3	3.3	3.3	3.3	3.2	3.1
-3.0	-4.0	3.5	3.5	3.5	3.4	3.4	3.4	3.2
-1.0	-2.0	3.7	3.7	3.6	3.6	3.6	3.4	3.2
0.0	-1.0	3.8	3.7	3.7	3.7	3.7	3.4	3.2
2.0	1.0	4.0	3.9	3.9	3.8	3.7	3.4	3.2
5.0	4.0	4.3	4.2	4.0	3.9	3.7	3.5	3.2
7.0	6.0	4.4	4.3	4.0	3.9	3.7	3.5	3.2
9.0	7.8	4.5	4.3	4.0	3.9	3.7	3.5	3.2
12.0	10.6	4.5	4.3	4.0	3.9	3.7	3.5	3.2
15.0	13.5	4.5	4.3	4.0	3.9	3.7	3.5	3.2

■ Model: AG∗A014GCGH

Outdoor temperature		Indoor temperature						
		16°CDB	18°CDB	20°CDB	21°CDB	22°CDB	24°CDB	26°CDB
°CDB	°CWB	TC	TC	TC	TC	TC	TC	TC
-19.3	-20.0	2.3	2.3	2.3	2.3	2.3	2.3	2.3
-15.0	-16.0	2.7	2.7	2.7	2.7	2.7	2.7	2.7
-12.0	-13.0	3.0	3.0	3.0	3.0	3.0	3.0	2.9
-9.0	-10.0	3.3	3.3	3.3	3.3	3.3	3.2	3.2
-7.0	-8.0	3.5	3.5	3.5	3.5	3.5	3.4	3.4
-5.0	-6.0	3.7	3.7	3.7	3.7	3.7	3.6	3.5
-3.0	-4.0	3.9	3.9	3.9	3.9	3.9	3.8	3.6
-1.0	-2.0	4.1	4.1	4.1	4.1	4.1	3.9	3.6
0.0	-1.0	4.2	4.2	4.2	4.2	4.2	3.9	3.6
2.0	1.0	4.5	4.4	4.4	4.3	4.2	3.9	3.6
5.0	4.0	4.8	4.8	4.5	4.3	4.2	3.9	3.6
7.0	6.0	5.0	4.8	4.5	4.3	4.2	3.9	3.6
9.0	7.8	5.1	4.8	4.5	4.3	4.2	3.9	3.6
12.0	10.6	5.1	4.8	4.5	4.3	4.2	3.9	3.6
15.0	13.5	5.1	4.8	4.5	4.3	4.2	3.9	3.6

3-12. Compact floor type (EEV external type model)

■ Model: AG∗E004GCEH

Outdoor temperature		Indoor temperature						
		16°CDB	18°CDB	20°CDB	21°CDB	22°CDB	24°CDB	26°CDB
°CDB	°CWB	TC	TC	TC	TC	TC	TC	TC
-19.3	-20.0	0.7	0.7	0.7	0.7	0.7	0.7	0.7
-15.0	-16.0	0.8	0.8	0.8	0.8	0.8	0.8	0.8
-12.0	-13.0	0.9	0.9	0.9	0.9	0.9	0.9	0.9
-9.0	-10.0	1.0	1.0	0.9	0.9	0.9	0.9	0.9
-7.0	-8.0	1.0	1.0	1.0	1.0	1.0	1.0	1.0
-5.0	-6.0	1.1	1.1	1.1	1.1	1.1	1.1	1.0
-3.0	-4.0	1.1	1.1	1.1	1.1	1.1	1.1	1.0
-1.0	-2.0	1.2	1.2	1.2	1.2	1.2	1.1	1.0
0.0	-1.0	1.2	1.2	1.2	1.2	1.2	1.1	1.0
2.0	1.0	1.3	1.3	1.3	1.2	1.2	1.1	1.0
5.0	4.0	1.4	1.4	1.3	1.3	1.2	1.1	1.0
7.0	6.0	1.4	1.4	1.3	1.3	1.2	1.1	1.0
9.0	7.8	1.5	1.4	1.3	1.3	1.2	1.1	1.0
12.0	10.6	1.5	1.4	1.3	1.3	1.2	1.1	1.0
15.0	13.5	1.5	1.4	1.3	1.3	1.2	1.1	1.0

■ Model: AG∗E007GCEH

Outdoor temperature		Indoor temperature						
		16°CDB	18°CDB	20°CDB	21°CDB	22°CDB	24°CDB	26°CDB
°CDB	°CWB	TC	TC	TC	TC	TC	TC	TC
-19.3	-20.0	1.5	1.4	1.4	1.4	1.4	1.4	1.4
-15.0	-16.0	1.7	1.7	1.7	1.7	1.7	1.7	1.7
-12.0	-13.0	1.9	1.9	1.9	1.8	1.8	1.8	1.8
-9.0	-10.0	2.1	2.1	2.0	2.0	2.0	2.0	2.0
-7.0	-8.0	2.2	2.2	2.2	2.2	2.2	2.1	2.1
-5.0	-6.0	2.3	2.3	2.3	2.3	2.3	2.3	2.2
-3.0	-4.0	2.4	2.4	2.4	2.4	2.4	2.4	2.2
-1.0	-2.0	2.6	2.6	2.5	2.5	2.5	2.4	2.2
0.0	-1.0	2.6	2.6	2.6	2.6	2.6	2.4	2.2
2.0	1.0	2.8	2.8	2.7	2.7	2.6	2.4	2.2
5.0	4.0	3.0	3.0	2.8	2.7	2.6	2.4	2.2
7.0	6.0	3.1	3.0	2.8	2.7	2.6	2.4	2.2
9.0	7.8	3.2	3.0	2.8	2.7	2.6	2.4	2.2
12.0	10.6	3.2	3.0	2.8	2.7	2.6	2.4	2.2
15.0	13.5	3.2	3.0	2.8	2.7	2.6	2.4	2.2

■ Model: AG∗E009GCEH

Outdoor temperature		Indoor temperature						
		16°CDB	18°CDB	20°CDB	21°CDB	22°CDB	24°CDB	26°CDB
°CDB	°CWB	TC	TC	TC	TC	TC	TC	TC
-19.3	-20.0	1.7	1.7	1.7	1.7	1.6	1.6	1.6
-15.0	-16.0	1.9	1.9	1.9	1.9	1.9	1.9	1.9
-12.0	-13.0	2.1	2.1	2.1	2.1	2.1	2.1	2.1
-9.0	-10.0	2.4	2.3	2.3	2.3	2.3	2.3	2.3
-7.0	-8.0	2.5	2.5	2.5	2.5	2.5	2.4	2.4
-5.0	-6.0	2.6	2.6	2.6	2.6	2.6	2.6	2.5
-3.0	-4.0	2.8	2.8	2.8	2.8	2.7	2.7	2.5
-1.0	-2.0	2.9	2.9	2.9	2.9	2.9	2.7	2.5
0.0	-1.0	3.0	3.0	3.0	3.0	3.0	2.7	2.5
2.0	1.0	3.2	3.1	3.1	3.1	3.0	2.8	2.5
5.0	4.0	3.4	3.4	3.2	3.1	3.0	2.8	2.6
7.0	6.0	3.5	3.4	3.2	3.1	3.0	2.8	2.6
9.0	7.8	3.6	3.4	3.2	3.1	3.0	2.8	2.6
12.0	10.6	3.6	3.4	3.2	3.1	3.0	2.8	2.6
15.0	13.5	3.6	3.4	3.2	3.1	3.0	2.8	2.6

■ Model: AG∗E012GCEH

Outdoor temperature		Indoor temperature						
		16°CDB	18°CDB	20°CDB	21°CDB	22°CDB	24°CDB	26°CDB
°CDB	°CWB	TC	TC	TC	TC	TC	TC	TC
-19.3	-20.0	2.1	2.1	2.1	2.1	2.1	2.1	2.0
-15.0	-16.0	2.4	2.4	2.4	2.4	2.4	2.4	2.4
-12.0	-13.0	2.7	2.7	2.7	2.6	2.6	2.6	2.6
-9.0	-10.0	2.9	2.9	2.9	2.9	2.9	2.9	2.9
-7.0	-8.0	3.1	3.1	3.1	3.1	3.1	3.1	3.0
-5.0	-6.0	3.3	3.3	3.3	3.3	3.3	3.2	3.1
-3.0	-4.0	3.5	3.5	3.5	3.4	3.4	3.4	3.2
-1.0	-2.0	3.7	3.7	3.6	3.6	3.6	3.4	3.2
0.0	-1.0	3.8	3.7	3.7	3.7	3.7	3.4	3.2
2.0	1.0	4.0	3.9	3.9	3.8	3.7	3.4	3.2
5.0	4.0	4.3	4.2	4.0	3.9	3.7	3.5	3.2
7.0	6.0	4.4	4.3	4.0	3.9	3.7	3.5	3.2
9.0	7.8	4.5	4.3	4.0	3.9	3.7	3.5	3.2
12.0	10.6	4.5	4.3	4.0	3.9	3.7	3.5	3.2
15.0	13.5	4.5	4.3	4.0	3.9	3.7	3.5	3.2

■ Model: AG∗E014GCEH

Outdoor temperature		Indoor temperature						
		16°CDB	18°CDB	20°CDB	21°CDB	22°CDB	24°CDB	26°CDB
°CDB	°CWB	TC	TC	TC	TC	TC	TC	TC
-19.3	-20.0	2.3	2.3	2.3	2.3	2.3	2.3	2.3
-15.0	-16.0	2.7	2.7	2.7	2.7	2.7	2.7	2.7
-12.0	-13.0	3.0	3.0	3.0	3.0	3.0	3.0	2.9
-9.0	-10.0	3.3	3.3	3.3	3.3	3.3	3.2	3.2
-7.0	-8.0	3.5	3.5	3.5	3.5	3.5	3.4	3.4
-5.0	-6.0	3.7	3.7	3.7	3.7	3.7	3.6	3.5
-3.0	-4.0	3.9	3.9	3.9	3.9	3.9	3.8	3.6
-1.0	-2.0	4.1	4.1	4.1	4.1	4.1	3.9	3.6
0.0	-1.0	4.2	4.2	4.2	4.2	4.2	3.9	3.6
2.0	1.0	4.5	4.4	4.4	4.3	4.2	3.9	3.6
5.0	4.0	4.8	4.8	4.5	4.3	4.2	3.9	3.6
7.0	6.0	5.0	4.8	4.5	4.3	4.2	3.9	3.6
9.0	7.8	5.1	4.8	4.5	4.3	4.2	3.9	3.6
12.0	10.6	5.1	4.8	4.5	4.3	4.2	3.9	3.6
15.0	13.5	5.1	4.8	4.5	4.3	4.2	3.9	3.6

3-13. Floor/Ceiling type

■ Model: AB∗A012GTEH

Outdoor temperature		Indoor temperature						
		16°CDB	18°CDB	20°CDB	21°CDB	22°CDB	24°CDB	26°CDB
°CDB	°CWB	TC	TC	TC	TC	TC	TC	TC
-19.3	-20.0	2.1	2.1	2.1	2.1	2.1	2.1	2.0
-15.0	-16.0	2.4	2.4	2.4	2.4	2.4	2.4	2.4
-12.0	-13.0	2.7	2.7	2.7	2.6	2.6	2.6	2.6
-9.0	-10.0	2.9	2.9	2.9	2.9	2.9	2.9	2.9
-7.0	-8.0	3.1	3.1	3.1	3.1	3.1	3.1	3.0
-5.0	-6.0	3.3	3.3	3.3	3.3	3.3	3.2	3.1
-3.0	-4.0	3.5	3.5	3.5	3.4	3.4	3.4	3.2
-1.0	-2.0	3.7	3.7	3.6	3.6	3.6	3.4	3.2
0.0	-1.0	3.8	3.7	3.7	3.7	3.7	3.4	3.2
2.0	1.0	4.0	3.9	3.9	3.8	3.7	3.4	3.2
5.0	4.0	4.3	4.2	4.0	3.9	3.7	3.5	3.2
7.0	6.0	4.4	4.3	4.0	3.9	3.7	3.5	3.2
9.0	7.8	4.5	4.3	4.0	3.9	3.7	3.5	3.2
12.0	10.6	4.5	4.3	4.0	3.9	3.7	3.5	3.2
15.0	13.5	4.5	4.3	4.0	3.9	3.7	3.5	3.2

■ Model: AB∗A014GTEH

Outdoor temperature		Indoor temperature						
		16°CDB	18°CDB	20°CDB	21°CDB	22°CDB	24°CDB	26°CDB
°CDB	°CWB	TC	TC	TC	TC	TC	TC	TC
-19.3	-20.0	2.6	2.6	2.6	2.6	2.6	2.6	2.6
-15.0	-16.0	3.0	3.0	3.0	3.0	3.0	3.0	3.0
-12.0	-13.0	3.3	3.3	3.3	3.3	3.3	3.3	3.3
-9.0	-10.0	3.7	3.7	3.6	3.6	3.6	3.6	3.6
-7.0	-8.0	3.9	3.9	3.9	3.9	3.8	3.8	3.8
-5.0	-6.0	4.1	4.1	4.1	4.1	4.1	4.0	3.9
-3.0	-4.0	4.4	4.3	4.3	4.3	4.3	4.3	4.0
-1.0	-2.0	4.6	4.6	4.5	4.5	4.5	4.3	4.0
0.0	-1.0	4.7	4.7	4.7	4.6	4.6	4.3	4.0
2.0	1.0	5.0	4.9	4.9	4.8	4.6	4.3	4.0
5.0	4.0	5.3	5.3	5.0	4.8	4.7	4.3	4.0
7.0	6.0	5.5	5.3	5.0	4.8	4.7	4.3	4.0
9.0	7.8	5.7	5.3	5.0	4.8	4.7	4.3	4.0
12.0	10.6	5.7	5.3	5.0	4.8	4.7	4.3	4.0
15.0	13.5	5.7	5.3	5.0	4.8	4.7	4.3	4.0

■ Model: AB∗A018GTEH

Outdoor temperature		Indoor temperature						
		16°CDB	18°CDB	20°CDB	21°CDB	22°CDB	24°CDB	26°CDB
°CDB	°CWB	TC	TC	TC	TC	TC	TC	TC
-19.3	-20.0	3.3	3.3	3.3	3.3	3.2	3.2	3.2
-15.0	-16.0	3.8	3.8	3.8	3.8	3.8	3.7	3.7
-12.0	-13.0	4.2	4.2	4.2	4.2	4.2	4.1	4.1
-9.0	-10.0	4.6	4.6	4.6	4.6	4.6	4.5	4.5
-7.0	-8.0	4.9	4.9	4.9	4.9	4.8	4.8	4.8
-5.0	-6.0	5.2	5.2	5.2	5.1	5.1	5.1	5.0
-3.0	-4.0	5.5	5.5	5.4	5.4	5.4	5.4	5.0
-1.0	-2.0	5.8	5.8	5.7	5.7	5.7	5.4	5.0
0.0	-1.0	5.9	5.9	5.9	5.8	5.8	5.4	5.0
2.0	1.0	6.2	6.2	6.2	6.0	5.8	5.4	5.0
5.0	4.0	6.7	6.7	6.3	6.1	5.9	5.5	5.0
7.0	6.0	7.0	6.7	6.3	6.1	5.9	5.5	5.0
9.0	7.8	7.1	6.7	6.3	6.1	5.9	5.5	5.0
12.0	10.6	7.1	6.7	6.3	6.1	5.9	5.5	5.0
15.0	13.5	7.1	6.7	6.3	6.1	5.9	5.5	5.0

■ Model: AB∗A024GTEH

Outdoor temperature		Indoor temperature						
		16°CDB	18°CDB	20°CDB	21°CDB	22°CDB	24°CDB	26°CDB
°CDB	°CWB	TC	TC	TC	TC	TC	TC	TC
-19.3	-20.0	4.2	4.1	4.1	4.1	4.1	4.1	4.1
-15.0	-16.0	4.8	4.8	4.8	4.8	4.8	4.7	4.7
-12.0	-13.0	5.4	5.3	5.3	5.3	5.3	5.3	5.2
-9.0	-10.0	5.9	5.9	5.8	5.8	5.8	5.8	5.7
-7.0	-8.0	6.2	6.2	6.2	6.2	6.1	6.1	6.1
-5.0	-6.0	6.6	6.6	6.6	6.5	6.5	6.5	6.3
-3.0	-4.0	7.0	6.9	6.9	6.9	6.9	6.8	6.3
-1.0	-2.0	7.4	7.3	7.3	7.2	7.2	6.9	6.3
0.0	-1.0	7.5	7.5	7.4	7.4	7.4	6.9	6.3
2.0	1.0	7.9	7.9	7.8	7.7	7.4	6.9	6.3
5.0	4.0	8.5	8.5	8.0	7.7	7.5	6.9	6.4
7.0	6.0	8.9	8.5	8.0	7.7	7.5	6.9	6.4
9.0	7.8	9.1	8.5	8.0	7.7	7.5	6.9	6.4
12.0	10.6	9.1	8.5	8.0	7.7	7.5	6.9	6.4
15.0	13.5	9.1	8.5	8.0	7.7	7.5	6.9	6.4

3-14. Ceiling type

■ Model: AB∗A030GTEH

Outdoor temperature		Indoor temperature						
		16°CDB	18°CDB	20°CDB	21°CDB	22°CDB	24°CDB	26°CDB
°CDB	°CWB	TC	TC	TC	TC	TC	TC	TC
-19.3	-20.0	5.2	5.2	5.2	5.2	5.1	5.1	5.1
-15.0	-16.0	6.0	6.0	6.0	6.0	6.0	5.9	5.9
-12.0	-13.0	6.7	6.7	6.6	6.6	6.6	6.6	6.5
-9.0	-10.0	7.4	7.3	7.3	7.3	7.2	7.2	7.2
-7.0	-8.0	7.8	7.8	7.7	7.7	7.7	7.7	7.6
-5.0	-6.0	8.3	8.2	8.2	8.2	8.1	8.1	7.9
-3.0	-4.0	8.7	8.7	8.6	8.6	8.6	8.5	7.9
-1.0	-2.0	9.2	9.1	9.1	9.0	9.0	8.6	7.9
0.0	-1.0	9.4	9.4	9.3	9.3	9.2	8.6	7.9
2.0	1.0	9.9	9.8	9.8	9.6	9.3	8.6	7.9
5.0	4.0	10.6	10.6	10.0	9.7	9.3	8.7	8.0
7.0	6.0	11.1	10.6	10.0	9.7	9.3	8.7	8.0
9.0	7.8	11.3	10.6	10.0	9.7	9.3	8.7	8.0
12.0	10.6	11.3	10.7	10.0	9.7	9.3	8.7	8.0
15.0	13.5	11.3	10.7	10.0	9.7	9.3	8.7	8.0

■ Model: AB∗A036GTEH

Outdoor temperature		Indoor temperature						
		16°CDB	18°CDB	20°CDB	21°CDB	22°CDB	24°CDB	26°CDB
°CDB	°CWB	TC	TC	TC	TC	TC	TC	TC
-19.3	-20.0	6.5	6.5	6.5	6.5	6.4	6.4	6.4
-15.0	-16.0	7.5	7.5	7.5	7.5	7.5	7.4	7.4
-12.0	-13.0	8.4	8.3	8.3	8.3	8.3	8.2	8.2
-9.0	-10.0	9.2	9.2	9.1	9.1	9.0	9.0	9.0
-7.0	-8.0	9.8	9.7	9.6	9.6	9.6	9.6	9.5
-5.0	-6.0	10.3	10.3	10.2	10.2	10.2	10.1	9.8
-3.0	-4.0	10.9	10.8	10.8	10.8	10.7	10.7	9.9
-1.0	-2.0	11.5	11.4	11.3	11.3	11.3	10.7	9.9
0.0	-1.0	11.8	11.7	11.6	11.6	11.5	10.7	9.9
2.0	1.0	12.4	12.3	12.2	12.0	11.6	10.8	9.9
5.0	4.0	13.3	13.2	12.5	12.1	11.7	10.8	10.0
7.0	6.0	13.8	13.3	12.5	12.1	11.7	10.8	10.0
9.0	7.8	14.2	13.3	12.5	12.1	11.7	10.8	10.0
12.0	10.6	14.2	13.3	12.5	12.1	11.7	10.8	10.0
15.0	13.5	14.2	13.3	12.5	12.1	11.7	10.8	10.0

■ Model: AB∗A045GTEH

Outdoor temperature		Indoor temperature						
		16°CDB	18°CDB	20°CDB	21°CDB	22°CDB	24°CDB	26°CDB
°CDB	°CWB	TC	TC	TC	TC	TC	TC	TC
-19.3	-20.0	7.3	7.2	7.2	7.2	7.2	7.2	7.2
-15.0	-16.0	8.4	8.4	8.4	8.4	8.4	8.3	8.3
-12.0	-13.0	9.4	9.3	9.3	9.2	9.2	9.2	9.2
-9.0	-10.0	10.3	10.3	10.2	10.2	10.1	10.1	10.0
-7.0	-8.0	10.9	10.9	10.8	10.8	10.8	10.7	10.7
-5.0	-6.0	11.6	11.5	11.5	11.4	11.4	11.3	11.0
-3.0	-4.0	12.2	12.1	12.1	12.0	12.0	12.0	11.1
-1.0	-2.0	12.9	12.8	12.7	12.7	12.6	12.0	11.1
0.0	-1.0	13.2	13.1	13.0	13.0	12.9	12.0	11.1
2.0	1.0	13.9	13.8	13.7	13.4	13.0	12.0	11.1
5.0	4.0	14.9	14.8	14.0	13.5	13.1	12.1	11.2
7.0	6.0	15.5	14.9	14.0	13.5	13.1	12.1	11.2
9.0	7.8	15.9	14.9	14.0	13.5	13.1	12.1	11.2
12.0	10.6	15.9	14.9	14.0	13.5	13.1	12.1	11.2
15.0	13.5	15.9	14.9	14.0	13.5	13.1	12.1	11.2

■ Model: AB∗A054GTEH

Outdoor temperature		Indoor temperature						
		16°CDB	18°CDB	20°CDB	21°CDB	22°CDB	24°CDB	26°CDB
°CDB	°CWB	TC	TC	TC	TC	TC	TC	TC
-19.3	-20.0	8.3	8.3	8.3	8.3	8.2	8.2	8.2
-15.0	-16.0	9.7	9.6	9.6	9.5	9.5	9.5	9.5
-12.0	-13.0	10.7	10.7	10.6	10.6	10.6	10.5	10.5
-9.0	-10.0	11.8	11.7	11.6	11.6	11.6	11.5	11.5
-7.0	-8.0	12.5	12.4	12.3	12.3	12.3	12.2	12.2
-5.0	-6.0	13.2	13.2	13.1	13.1	13.0	13.0	12.6
-3.0	-4.0	14.0	13.9	13.8	13.8	13.7	13.7	12.6
-1.0	-2.0	14.7	14.6	14.5	14.5	14.4	13.7	12.6
0.0	-1.0	15.1	15.0	14.9	14.8	14.8	13.7	12.6
2.0	1.0	15.8	15.7	15.6	15.3	14.8	13.8	12.7
5.0	4.0	17.0	16.9	16.0	15.4	14.9	13.9	12.8
7.0	6.0	17.7	17.0	16.0	15.4	14.9	13.9	12.8
9.0	7.8	18.1	17.0	16.0	15.4	14.9	13.9	12.8
12.0	10.6	18.1	17.1	16.0	15.4	14.9	13.9	12.8
15.0	13.5	18.1	17.1	16.0	15.4	14.9	13.9	12.8

3-15. Wall mounted type

■ Model: AS∗A004GCGH

Outdoor temperature		Indoor temperature						
		16°CDB	18°CDB	20°CDB	21°CDB	22°CDB	24°CDB	26°CDB
°CDB	°CWB	TC	TC	TC	TC	TC	TC	TC
-19.3	-20.0	0.7	0.7	0.7	0.7	0.7	0.7	0.7
-15.0	-16.0	0.8	0.8	0.8	0.8	0.8	0.8	0.8
-12.0	-13.0	0.9	0.9	0.9	0.9	0.9	0.9	0.9
-9.0	-10.0	1.0	1.0	0.9	0.9	0.9	0.9	0.9
-7.0	-8.0	1.0	1.0	1.0	1.0	1.0	1.0	1.0
-5.0	-6.0	1.1	1.1	1.1	1.1	1.1	1.1	1.0
-3.0	-4.0	1.1	1.1	1.1	1.1	1.1	1.1	1.0
-1.0	-2.0	1.2	1.2	1.2	1.2	1.2	1.1	1.0
0.0	-1.0	1.2	1.2	1.2	1.2	1.2	1.1	1.0
2.0	1.0	1.3	1.3	1.3	1.2	1.2	1.1	1.0
5.0	4.0	1.4	1.4	1.3	1.3	1.2	1.1	1.0
7.0	6.0	1.4	1.4	1.3	1.3	1.2	1.1	1.0
9.0	7.8	1.5	1.4	1.3	1.3	1.2	1.1	1.0
12.0	10.6	1.5	1.4	1.3	1.3	1.2	1.1	1.0
15.0	13.5	1.5	1.4	1.3	1.3	1.2	1.1	1.0

■ Model: AS∗A007GCGH

Outdoor temperature		Indoor temperature						
		16°CDB	18°CDB	20°CDB	21°CDB	22°CDB	24°CDB	26°CDB
°CDB	°CWB	TC	TC	TC	TC	TC	TC	TC
-19.3	-20.0	1.5	1.4	1.4	1.4	1.4	1.4	1.4
-15.0	-16.0	1.7	1.7	1.7	1.7	1.7	1.7	1.7
-12.0	-13.0	1.9	1.9	1.9	1.8	1.8	1.8	1.8
-9.0	-10.0	2.1	2.1	2.0	2.0	2.0	2.0	2.0
-7.0	-8.0	2.2	2.2	2.2	2.2	2.2	2.1	2.1
-5.0	-6.0	2.3	2.3	2.3	2.3	2.3	2.3	2.2
-3.0	-4.0	2.4	2.4	2.4	2.4	2.4	2.4	2.2
-1.0	-2.0	2.6	2.6	2.5	2.5	2.5	2.4	2.2
0.0	-1.0	2.6	2.6	2.6	2.6	2.6	2.4	2.2
2.0	1.0	2.8	2.8	2.7	2.7	2.6	2.4	2.2
5.0	4.0	3.0	3.0	2.8	2.7	2.6	2.4	2.2
7.0	6.0	3.1	3.0	2.8	2.7	2.6	2.4	2.2
9.0	7.8	3.2	3.0	2.8	2.7	2.6	2.4	2.2
12.0	10.6	3.2	3.0	2.8	2.7	2.6	2.4	2.2
15.0	13.5	3.2	3.0	2.8	2.7	2.6	2.4	2.2

■ Model: AS∗A009GCGH

Outdoor temperature		Indoor temperature						
		16°CDB	18°CDB	20°CDB	21°CDB	22°CDB	24°CDB	26°CDB
°CDB	°CWB	TC	TC	TC	TC	TC	TC	TC
-19.3	-20.0	1.7	1.7	1.7	1.7	1.6	1.6	1.6
-15.0	-16.0	1.9	1.9	1.9	1.9	1.9	1.9	1.9
-12.0	-13.0	2.1	2.1	2.1	2.1	2.1	2.1	2.1
-9.0	-10.0	2.4	2.3	2.3	2.3	2.3	2.3	2.3
-7.0	-8.0	2.5	2.5	2.5	2.5	2.5	2.4	2.4
-5.0	-6.0	2.6	2.6	2.6	2.6	2.6	2.6	2.5
-3.0	-4.0	2.8	2.8	2.8	2.8	2.7	2.7	2.5
-1.0	-2.0	2.9	2.9	2.9	2.9	2.9	2.7	2.5
0.0	-1.0	3.0	3.0	3.0	3.0	3.0	2.7	2.5
2.0	1.0	3.2	3.1	3.1	3.1	3.0	2.8	2.5
5.0	4.0	3.4	3.4	3.2	3.1	3.0	2.8	2.6
7.0	6.0	3.5	3.4	3.2	3.1	3.0	2.8	2.6
9.0	7.8	3.6	3.4	3.2	3.1	3.0	2.8	2.6
12.0	10.6	3.6	3.4	3.2	3.1	3.0	2.8	2.6
15.0	13.5	3.6	3.4	3.2	3.1	3.0	2.8	2.6

■ Model: AS∗A012GCGH

Outdoor temperature		Indoor temperature						
		16°CDB	18°CDB	20°CDB	21°CDB	22°CDB	24°CDB	26°CDB
°CDB	°CWB	TC	TC	TC	TC	TC	TC	TC
-19.3	-20.0	2.1	2.1	2.1	2.1	2.1	2.1	2.0
-15.0	-16.0	2.4	2.4	2.4	2.4	2.4	2.4	2.4
-12.0	-13.0	2.7	2.7	2.7	2.6	2.6	2.6	2.6
-9.0	-10.0	2.9	2.9	2.9	2.9	2.9	2.9	2.9
-7.0	-8.0	3.1	3.1	3.1	3.1	3.1	3.1	3.0
-5.0	-6.0	3.3	3.3	3.3	3.3	3.3	3.2	3.1
-3.0	-4.0	3.5	3.5	3.5	3.4	3.4	3.4	3.2
-1.0	-2.0	3.7	3.7	3.6	3.6	3.6	3.4	3.2
0.0	-1.0	3.8	3.7	3.7	3.7	3.7	3.4	3.2
2.0	1.0	4.0	3.9	3.9	3.8	3.7	3.4	3.2
5.0	4.0	4.3	4.2	4.0	3.9	3.7	3.5	3.2
7.0	6.0	4.4	4.3	4.0	3.9	3.7	3.5	3.2
9.0	7.8	4.5	4.3	4.0	3.9	3.7	3.5	3.2
12.0	10.6	4.5	4.3	4.0	3.9	3.7	3.5	3.2
15.0	13.5	4.5	4.3	4.0	3.9	3.7	3.5	3.2

■ Model: AS∗A014GCGH

Outdoor temperature		Indoor temperature						
		16°CDB	18°CDB	20°CDB	21°CDB	22°CDB	24°CDB	26°CDB
°CDB	°CWB	TC	TC	TC	TC	TC	TC	TC
-19.3	-20.0	2.3	2.3	2.3	2.3	2.3	2.3	2.3
-15.0	-16.0	2.7	2.7	2.7	2.7	2.7	2.7	2.7
-12.0	-13.0	3.0	3.0	3.0	3.0	3.0	3.0	2.9
-9.0	-10.0	3.3	3.3	3.3	3.3	3.3	3.2	3.2
-7.0	-8.0	3.5	3.5	3.5	3.5	3.5	3.4	3.4
-5.0	-6.0	3.7	3.7	3.7	3.7	3.7	3.6	3.5
-3.0	-4.0	3.9	3.9	3.9	3.9	3.9	3.8	3.6
-1.0	-2.0	4.1	4.1	4.1	4.1	4.1	3.9	3.6
0.0	-1.0	4.2	4.2	4.2	4.2	4.2	3.9	3.6
2.0	1.0	4.5	4.4	4.4	4.3	4.2	3.9	3.6
5.0	4.0	4.8	4.8	4.5	4.3	4.2	3.9	3.6
7.0	6.0	5.0	4.8	4.5	4.3	4.2	3.9	3.6
9.0	7.8	5.1	4.8	4.5	4.3	4.2	3.9	3.6
12.0	10.6	5.1	4.8	4.5	4.3	4.2	3.9	3.6
15.0	13.5	5.1	4.8	4.5	4.3	4.2	3.9	3.6

■ Model: AS∗A18GBCH

Outdoor temperature		Indoor temperature						
		16°CDB	18°CDB	20°CDB	21°CDB	22°CDB	24°CDB	26°CDB
°CDB	°CWB	TC	TC	TC	TC	TC	TC	TC
-19.3	-20.0	3.3	3.3	3.3	3.3	3.2	3.2	3.2
-15.0	-16.0	3.8	3.8	3.8	3.8	3.8	3.7	3.7
-12.0	-13.0	4.2	4.2	4.2	4.2	4.2	4.1	4.1
-9.0	-10.0	4.6	4.6	4.6	4.6	4.6	4.5	4.5
-7.0	-8.0	4.9	4.9	4.9	4.9	4.8	4.8	4.8
-5.0	-6.0	5.2	5.2	5.2	5.1	5.1	5.1	5.0
-3.0	-4.0	5.5	5.5	5.4	5.4	5.4	5.4	5.0
-1.0	-2.0	5.8	5.8	5.7	5.7	5.7	5.4	5.0
0.0	-1.0	5.9	5.9	5.9	5.8	5.8	5.4	5.0
2.0	1.0	6.2	6.2	6.2	6.0	5.8	5.4	5.0
5.0	4.0	6.7	6.7	6.3	6.1	5.9	5.5	5.0
7.0	6.0	7.0	6.7	6.3	6.1	5.9	5.5	5.0
9.0	7.8	7.1	6.7	6.3	6.1	5.9	5.5	5.0
12.0	10.6	7.1	6.7	6.3	6.1	5.9	5.5	5.0
15.0	13.5	7.1	6.7	6.3	6.1	5.9	5.5	5.0

■ Model: AS∗A24GBCH

Outdoor temperature		Indoor temperature						
		16°CDB	18°CDB	20°CDB	21°CDB	22°CDB	24°CDB	26°CDB
°CDB	°CWB	TC	TC	TC	TC	TC	TC	TC
-19.3	-20.0	4.2	4.1	4.1	4.1	4.1	4.1	4.1
-15.0	-16.0	4.8	4.8	4.8	4.8	4.8	4.7	4.7
-12.0	-13.0	5.4	5.3	5.3	5.3	5.3	5.3	5.2
-9.0	-10.0	5.9	5.9	5.8	5.8	5.8	5.8	5.7
-7.0	-8.0	6.2	6.2	6.2	6.2	6.1	6.1	6.1
-5.0	-6.0	6.6	6.6	6.6	6.5	6.5	6.5	6.3
-3.0	-4.0	7.0	6.9	6.9	6.9	6.9	6.8	6.3
-1.0	-2.0	7.4	7.3	7.3	7.2	7.2	6.9	6.3
0.0	-1.0	7.5	7.5	7.4	7.4	7.4	6.9	6.3
2.0	1.0	7.9	7.9	7.8	7.7	7.4	6.9	6.3
5.0	4.0	8.5	8.5	8.0	7.7	7.5	6.9	6.4
7.0	6.0	8.9	8.5	8.0	7.7	7.5	6.9	6.4
9.0	7.8	9.1	8.5	8.0	7.7	7.5	6.9	6.4
12.0	10.6	9.1	8.5	8.0	7.7	7.5	6.9	6.4
15.0	13.5	9.1	8.5	8.0	7.7	7.5	6.9	6.4

■ Model: AS∗A030GTEH

Outdoor temperature		Indoor temperature						
		16°CDB	18°CDB	20°CDB	21°CDB	22°CDB	24°CDB	26°CDB
°CDB	°CWB	TC	TC	TC	TC	TC	TC	TC
-19.3	-20.0	5.2	5.2	5.2	5.2	5.1	5.1	5.1
-15.0	-16.0	6.0	6.0	6.0	6.0	6.0	5.9	5.9
-12.0	-13.0	6.7	6.7	6.6	6.6	6.6	6.6	6.5
-9.0	-10.0	7.4	7.3	7.3	7.3	7.2	7.2	7.2
-7.0	-8.0	7.8	7.8	7.7	7.7	7.7	7.7	7.6
-5.0	-6.0	8.3	8.2	8.2	8.2	8.1	8.1	7.9
-3.0	-4.0	8.7	8.7	8.6	8.6	8.6	8.5	7.9
-1.0	-2.0	9.2	9.1	9.1	9.0	9.0	8.6	7.9
0.0	-1.0	9.4	9.4	9.3	9.3	9.2	8.6	7.9
2.0	1.0	9.9	9.8	9.8	9.6	9.3	8.6	7.9
5.0	4.0	10.6	10.6	10.0	9.7	9.3	8.7	8.0
7.0	6.0	11.1	10.6	10.0	9.7	9.3	8.7	8.0
9.0	7.8	11.3	10.6	10.0	9.7	9.3	8.7	8.0
12.0	10.6	11.3	10.7	10.0	9.7	9.3	8.7	8.0
15.0	13.5	11.3	10.7	10.0	9.7	9.3	8.7	8.0

■ Model: AS∗A034GTEH

Outdoor temperature		Indoor temperature						
		16°CDB	18°CDB	20°CDB	21°CDB	22°CDB	24°CDB	26°CDB
°CDB	°CWB	TC	TC	TC	TC	TC	TC	TC
-19.3	-20.0	5.8	5.8	5.8	5.8	5.8	5.8	5.7
-15.0	-16.0	6.8	6.7	6.7	6.7	6.7	6.6	6.6
-12.0	-13.0	7.5	7.5	7.4	7.4	7.4	7.4	7.3
-9.0	-10.0	8.2	8.2	8.1	8.1	8.1	8.1	8.0
-7.0	-8.0	8.7	8.7	8.6	8.6	8.6	8.6	8.5
-5.0	-6.0	9.2	9.2	9.2	9.1	9.1	9.1	8.8
-3.0	-4.0	9.8	9.7	9.7	9.6	9.6	9.6	8.9
-1.0	-2.0	10.3	10.2	10.2	10.1	10.1	9.6	8.9
0.0	-1.0	10.6	10.5	10.4	10.4	10.3	9.6	8.9
2.0	1.0	11.1	11.0	11.0	10.7	10.4	9.6	8.9
5.0	4.0	11.9	11.8	11.2	10.8	10.5	9.7	9.0
7.0	6.0	12.4	11.9	11.2	10.8	10.4	9.7	9.0
9.0	7.8	12.7	11.9	11.2	10.8	10.5	9.7	9.0
12.0	10.6	12.7	11.9	11.2	10.8	10.5	9.7	9.0
15.0	13.5	12.7	11.9	11.2	10.8	10.5	9.7	9.0

3-16. Wall mounted type (EEV external type model)

■ Model: AS∗E004GCEH

Outdoor temperature		Indoor temperature						
		16°CDB	18°CDB	20°CDB	21°CDB	22°CDB	24°CDB	26°CDB
°CDB	°CWB	TC	TC	TC	TC	TC	TC	TC
-19.3	-20.0	0.7	0.7	0.7	0.7	0.7	0.7	0.7
-15.0	-16.0	0.8	0.8	0.8	0.8	0.8	0.8	0.8
-12.0	-13.0	0.9	0.9	0.9	0.9	0.9	0.9	0.9
-9.0	-10.0	1.0	1.0	0.9	0.9	0.9	0.9	0.9
-7.0	-8.0	1.0	1.0	1.0	1.0	1.0	1.0	1.0
-5.0	-6.0	1.1	1.1	1.1	1.1	1.1	1.1	1.0
-3.0	-4.0	1.1	1.1	1.1	1.1	1.1	1.1	1.0
-1.0	-2.0	1.2	1.2	1.2	1.2	1.2	1.1	1.0
0.0	-1.0	1.2	1.2	1.2	1.2	1.2	1.1	1.0
2.0	1.0	1.3	1.3	1.3	1.2	1.2	1.1	1.0
5.0	4.0	1.4	1.4	1.3	1.3	1.2	1.1	1.0
7.0	6.0	1.4	1.4	1.3	1.3	1.2	1.1	1.0
9.0	7.8	1.5	1.4	1.3	1.3	1.2	1.1	1.0
12.0	10.6	1.5	1.4	1.3	1.3	1.2	1.1	1.0
15.0	13.5	1.5	1.4	1.3	1.3	1.2	1.1	1.0

■ Model: AS∗E007GCEH

Outdoor temperature		Indoor temperature						
		16°CDB	18°CDB	20°CDB	21°CDB	22°CDB	24°CDB	26°CDB
°CDB	°CWB	TC	TC	TC	TC	TC	TC	TC
-19.3	-20.0	1.5	1.4	1.4	1.4	1.4	1.4	1.4
-15.0	-16.0	1.7	1.7	1.7	1.7	1.7	1.7	1.7
-12.0	-13.0	1.9	1.9	1.9	1.8	1.8	1.8	1.8
-9.0	-10.0	2.1	2.1	2.0	2.0	2.0	2.0	2.0
-7.0	-8.0	2.2	2.2	2.2	2.2	2.2	2.1	2.1
-5.0	-6.0	2.3	2.3	2.3	2.3	2.3	2.3	2.2
-3.0	-4.0	2.4	2.4	2.4	2.4	2.4	2.4	2.2
-1.0	-2.0	2.6	2.6	2.5	2.5	2.5	2.4	2.2
0.0	-1.0	2.6	2.6	2.6	2.6	2.6	2.4	2.2
2.0	1.0	2.8	2.8	2.7	2.7	2.6	2.4	2.2
5.0	4.0	3.0	3.0	2.8	2.7	2.6	2.4	2.2
7.0	6.0	3.1	3.0	2.8	2.7	2.6	2.4	2.2
9.0	7.8	3.2	3.0	2.8	2.7	2.6	2.4	2.2
12.0	10.6	3.2	3.0	2.8	2.7	2.6	2.4	2.2
15.0	13.5	3.2	3.0	2.8	2.7	2.6	2.4	2.2

■ Model: AS∗E009GCEH

Outdoor temperature		Indoor temperature						
		16°CDB	18°CDB	20°CDB	21°CDB	22°CDB	24°CDB	26°CDB
°CDB	°CWB	TC	TC	TC	TC	TC	TC	TC
-19.3	-20.0	1.7	1.7	1.7	1.7	1.6	1.6	1.6
-15.0	-16.0	1.9	1.9	1.9	1.9	1.9	1.9	1.9
-12.0	-13.0	2.1	2.1	2.1	2.1	2.1	2.1	2.1
-9.0	-10.0	2.4	2.3	2.3	2.3	2.3	2.3	2.3
-7.0	-8.0	2.5	2.5	2.5	2.5	2.5	2.4	2.4
-5.0	-6.0	2.6	2.6	2.6	2.6	2.6	2.6	2.5
-3.0	-4.0	2.8	2.8	2.8	2.8	2.7	2.7	2.5
-1.0	-2.0	2.9	2.9	2.9	2.9	2.9	2.7	2.5
0.0	-1.0	3.0	3.0	3.0	3.0	3.0	2.7	2.5
2.0	1.0	3.2	3.1	3.1	3.1	3.0	2.8	2.5
5.0	4.0	3.4	3.4	3.2	3.1	3.0	2.8	2.6
7.0	6.0	3.5	3.4	3.2	3.1	3.0	2.8	2.6
9.0	7.8	3.6	3.4	3.2	3.1	3.0	2.8	2.6
12.0	10.6	3.6	3.4	3.2	3.1	3.0	2.8	2.6
15.0	13.5	3.6	3.4	3.2	3.1	3.0	2.8	2.6

■ Model: AS∗E012GCEH

Outdoor temperature		Indoor temperature						
		16°CDB	18°CDB	20°CDB	21°CDB	22°CDB	24°CDB	26°CDB
°CDB	°CWB	TC	TC	TC	TC	TC	TC	TC
-19.3	-20.0	2.1	2.1	2.1	2.1	2.1	2.1	2.0
-15.0	-16.0	2.4	2.4	2.4	2.4	2.4	2.4	2.4
-12.0	-13.0	2.7	2.7	2.7	2.6	2.6	2.6	2.6
-9.0	-10.0	2.9	2.9	2.9	2.9	2.9	2.9	2.9
-7.0	-8.0	3.1	3.1	3.1	3.1	3.1	3.1	3.0
-5.0	-6.0	3.3	3.3	3.3	3.3	3.3	3.2	3.1
-3.0	-4.0	3.5	3.5	3.5	3.4	3.4	3.4	3.2
-1.0	-2.0	3.7	3.7	3.6	3.6	3.6	3.4	3.2
0.0	-1.0	3.8	3.7	3.7	3.7	3.7	3.4	3.2
2.0	1.0	4.0	3.9	3.9	3.8	3.7	3.4	3.2
5.0	4.0	4.3	4.2	4.0	3.9	3.7	3.5	3.2
7.0	6.0	4.4	4.3	4.0	3.9	3.7	3.5	3.2
9.0	7.8	4.5	4.3	4.0	3.9	3.7	3.5	3.2
12.0	10.6	4.5	4.3	4.0	3.9	3.7	3.5	3.2
15.0	13.5	4.5	4.3	4.0	3.9	3.7	3.5	3.2

■ Model: AS∗E014GCEH

Outdoor temperature		Indoor temperature						
		16°CDB	18°CDB	20°CDB	21°CDB	22°CDB	24°CDB	26°CDB
°CDB	°CWB	TC	TC	TC	TC	TC	TC	TC
-19.3	-20.0	2.3	2.3	2.3	2.3	2.3	2.3	2.3
-15.0	-16.0	2.7	2.7	2.7	2.7	2.7	2.7	2.7
-12.0	-13.0	3.0	3.0	3.0	3.0	3.0	3.0	2.9
-9.0	-10.0	3.3	3.3	3.3	3.3	3.3	3.2	3.2
-7.0	-8.0	3.5	3.5	3.5	3.5	3.5	3.4	3.4
-5.0	-6.0	3.7	3.7	3.7	3.7	3.7	3.6	3.5
-3.0	-4.0	3.9	3.9	3.9	3.9	3.9	3.8	3.6
-1.0	-2.0	4.1	4.1	4.1	4.1	4.1	3.9	3.6
0.0	-1.0	4.2	4.2	4.2	4.2	4.2	3.9	3.6
2.0	1.0	4.5	4.4	4.4	4.3	4.2	3.9	3.6
5.0	4.0	4.8	4.8	4.5	4.3	4.2	3.9	3.6
7.0	6.0	5.0	4.8	4.5	4.3	4.2	3.9	3.6
9.0	7.8	5.1	4.8	4.5	4.3	4.2	3.9	3.6
12.0	10.6	5.1	4.8	4.5	4.3	4.2	3.9	3.6
15.0	13.5	5.1	4.8	4.5	4.3	4.2	3.9	3.6

4. Cooling capacity table (Outdoor unit)

- TC: Total capacity (kW)
- IP: Input power of compressor and outdoor fan motor (kW)
- The data is based on the following conditions:
  - Pipe length: 7.5 m
  - Height difference: 0 m

4-1. Stand-alone

■ Model: AJ∗040LCLDH

Cooling capacity at rated condition: 12.1 kW (4 HP)																	
Total rated capacity of indoor unit	Outdoor temperature	Indoor temperature															
		20°CDB/15°CWB		23°CDB/16°CWB		24°CDB/17°CWB		26°CDB/18°CWB		27°CDB/19°CWB		28°CDB/20°CWB		30°CDB/22°CWB		32°CDB/23°CWB	
	°CDB	TC	IP	TC	IP	TC	IP	TC	IP	TC	IP	TC	IP	TC	IP	TC	IP
15.7 (130%)	10	11.2	1.52	12.3	1.67	13.5	1.82	14.6	1.96	15.7	2.12	16.9	2.40	19.0	3.00	19.3	3.03
	15	11.2	1.52	12.3	1.71	13.5	1.97	14.6	2.26	15.7	2.57	16.9	2.92	18.3	3.33	18.7	3.36
	21	11.1	1.85	12.3	2.14	13.5	2.47	14.6	2.83	15.7	3.22	16.9	3.65	17.5	3.72	17.8	3.76
	23	11.2	1.99	12.3	2.30	13.5	2.65	14.6	3.04	15.7	3.47	16.6	3.78	17.2	3.86	17.5	3.90
	25	11.2	2.13	12.3	2.48	13.5	2.85	14.6	3.27	15.7	3.73	16.3	3.91	16.9	4.00	17.2	4.04
	27	11.2	2.29	12.3	2.66	13.5	3.06	14.6	3.51	15.7	4.00	16.0	4.05	16.6	4.14	16.9	4.19
	30	11.2	2.54	12.3	2.95	13.5	3.41	14.6	3.93	15.3	4.22	15.6	4.27	16.2	4.37	16.5	4.42
	33	11.1	2.82	12.3	3.29	13.5	3.82	14.6	4.39	14.8	4.44	15.1	4.49	15.7	4.60	16.0	4.65
	35	11.2	3.03	12.3	3.54	13.5	4.12	14.3	4.53	14.5	4.59	14.8	4.64	15.4	4.75	15.7	4.81
	37	11.2	3.26	12.3	3.82	13.5	4.45	14.0	4.68	14.2	4.74	14.5	4.79	15.1	4.91	15.4	4.97
	40	11.2	3.65	12.3	4.29	13.2	4.85	13.5	4.91	13.8	4.97	14.0	4.98	14.4	4.98	14.6	4.98
	43	11.2	4.09	12.3	4.83	12.7	4.98	12.9	4.98	13.1	4.98	13.2	4.98	13.6	4.98	13.8	4.98
	46	11.2	4.60	11.8	4.98	12.0	4.98	12.2	4.98	12.3	4.98	12.5	4.98	12.9	4.98	13.0	4.98
14.5 (120%)	10	10.3	1.42	11.4	1.55	12.4	1.68	13.5	1.82	14.5	1.95	15.6	2.09	17.7	2.62	18.7	2.93
	15	10.3	1.42	11.4	1.55	12.4	1.74	13.5	1.98	14.5	2.24	15.6	2.53	17.7	3.18	18.2	3.32
	21	10.3	1.64	11.4	1.90	12.4	2.17	13.5	2.47	14.5	2.80	15.6	3.16	17.1	3.69	17.4	3.72
	23	10.3	1.77	11.4	2.04	12.4	2.33	13.5	2.66	14.5	3.01	15.6	3.40	16.8	3.82	17.2	3.86
	25	10.3	1.90	11.4	2.19	12.4	2.51	13.5	2.86	14.5	3.24	15.6	3.66	16.6	3.96	16.9	4.00
	27	10.3	2.03	11.4	2.35	12.4	2.69	13.5	3.07	14.5	3.48	15.6	3.94	16.3	4.10	16.6	4.14
	30	10.3	2.26	11.4	2.61	12.4	2.99	13.5	3.41	14.5	3.89	15.3	4.23	15.9	4.32	16.1	4.37
	33	10.3	2.50	11.4	2.89	12.4	3.33	13.5	3.82	14.5	4.37	14.8	4.45	15.4	4.55	15.7	4.60
	35	10.3	2.68	11.4	3.11	12.4	3.59	13.5	4.13	14.3	4.55	14.5	4.60	15.1	4.70	15.4	4.76
	37	10.3	2.88	11.4	3.35	12.4	3.87	13.5	4.46	14.0	4.70	14.3	4.75	14.8	4.86	15.1	4.92
	40	10.3	3.21	11.4	3.75	12.4	4.35	13.3	4.86	13.5	4.92	13.7	4.94	14.1	4.94	14.3	4.94
	43	10.3	3.59	11.4	4.20	12.4	4.90	12.7	4.94	12.8	4.94	13.0	4.94	13.4	4.94	13.6	4.94
	46	10.3	4.02	11.4	4.73	11.8	4.94	12.0	4.94	12.1	4.94	12.3	4.94	12.7	4.94	12.8	4.94
13.3 (110%)	10	9.5	1.31	10.4	1.43	11.4	1.55	12.3	1.67	13.3	1.80	14.3	1.92	16.2	2.23	17.2	2.48
	15	9.5	1.31	10.4	1.43	11.4	1.52	12.3	1.72	13.3	1.94	14.3	2.18	16.2	2.71	17.1	2.97
	21	9.5	1.45	10.4	1.67	11.4	1.90	12.3	2.15	13.3	2.43	14.3	2.72	16.0	3.30	16.3	3.34
	23	9.5	1.56	10.4	1.79	11.4	2.04	12.3	2.31	13.3	2.61	14.3	2.93	15.8	3.43	16.1	3.46
	25	9.5	1.68	10.4	1.92	11.4	2.19	12.3	2.48	13.3	2.80	14.3	3.15	15.5	3.55	15.8	3.59
	27	9.5	1.80	10.4	2.06	11.4	2.35	12.3	2.67	13.3	3.01	14.3	3.38	15.3	3.68	15.6	3.72
	30	9.5	1.99	10.4	2.29	11.4	2.61	12.3	2.96	13.3	3.35	14.3	3.77	14.9	3.88	15.1	3.92
	33	9.5	2.21	10.4	2.54	11.4	2.90	12.3	3.30	13.3	3.74	13.9	4.00	14.5	4.09	14.7	4.14
	35	9.5	2.36	10.4	2.72	11.4	3.12	12.4	3.56	13.3	4.04	13.7	4.14	14.2	4.23	14.5	4.28
	37	9.5	2.53	10.4	2.92	11.4	3.36	12.3	3.84	13.1	4.24	13.4	4.28	13.9	4.38	14.2	4.43
	40	9.5	2.82	10.4	3.26	11.4	3.76	12.3	4.30	12.7	4.45	13.0	4.50	13.4	4.54	13.6	4.54
	43	9.5	3.14	10.4	3.65	11.4	4.21	12.0	4.54	12.2	4.54	12.3	4.54	12.7	4.54	12.9	4.54
	46	9.5	3.51	10.4	4.09	11.1	4.54	11.3	4.54	11.5	4.54	11.6	4.54	12.0	4.54	12.2	4.54
12.1 (100%)	10	8.6	1.20	9.5	1.31	10.3	1.42	11.2	1.53	12.1	1.64	13.0	1.75	14.7	1.98	15.6	2.09
	15	8.6	1.20	9.5	1.31	10.3	1.42	11.2	1.53	12.1	1.67	13.0	1.86	14.7	2.30	15.6	2.54
	21	8.6	1.28	9.5	1.46	10.3	1.65	11.2	1.86	12.1	2.09	13.0	2.33	14.7	2.87	15.6	3.17
	23	8.6	1.37	9.5	1.57	10.3	1.78	11.2	2.00	12.1	2.24	13.0	2.50	14.7	3.09	15.6	3.41
	25	8.6	1.47	9.5	1.68	10.3	1.91	11.2	2.15	12.1	2.41	13.0	2.69	14.7	3.32	15.3	3.53
	27	8.6	1.58	9.5	1.80	10.3	2.04	11.2	2.30	12.1	2.58	13.0	2.89	14.7	3.57	15.1	3.66
	30	8.6	1.75	9.5	2.00	10.3	2.27	11.2	2.56	12.1	2.87	13.0	3.21	14.5	3.82	14.7	3.86
	33	8.6	1.93	9.5	2.21	10.3	2.51	11.2	2.84	12.1	3.19	13.0	3.59	14.1	4.03	14.3	4.07
	35	8.6	2.07	9.5	2.37	10.3	2.69	11.2	3.05	12.1	3.44	13.0	3.87	13.8	4.13	13.9	4.13
	37	8.6	2.21	9.5	2.54	10.3	2.89	11.2	3.28	12.1	3.71	12.9	4.13	13.3	4.13	13.5	4.13
	40	8.6	2.46	9.5	2.82	10.3	3.23	11.2	3.67	12.1	4.13	12.2	4.13	12.6	4.13	12.8	4.13
	43	8.6	2.73	9.5	3.15	10.3	3.61	11.2	4.12	11.4	4.13	11.6	4.13	11.9	4.13	12.1	4.13
	46	8.6	3.04	9.5	3.52	10.3	4.04	10.6	4.13	10.8	4.13	10.9	4.13	11.3	4.13	11.4	4.13
10.8 (90%)	10	7.7	1.09	8.5	1.19	9.3	1.29	10.1	1.39	10.8	1.49	11.7	1.59	13.3	1.79	14.0	1.89
	15	7.7	1.09	8.5	1.19	9.3	1.29	10.1	1.39	10.8	1.49	11.7	1.59	13.3	1.93	14.0	2.12
	21	7.7	1.11	8.5	1.26	9.3	1.42	10.1	1.60	10.8	1.78	11.7	1.98	13.3	2.41	14.0	2.65
	23	7.7	1.20	8.5	1.36	9.3	1.53	10.1	1.71	10.8	1.91	11.7	2.12	13.3	2.59	14.0	2.85
	25	7.7	1.28	8.5	1.46	9.3	1.64	10.1	1.84	10.8	2.05	11.7	2.28	13.3	2.78	14.0	3.06
	27	7.7	1.37	8.5	1.56	9.3	1.76	10.1	1.97	10.8	2.20	11.7	2.45	13.3	2.99	14.0	3.29
	30	7.7	1.52	8.5	1.73	9.3	1.95	10.1	2.19	10.8	2.44	11.7	2.72	13.3	3.32	14.0	3.67
	33	7.7	1.68	8.5	1.91	9.3	2.16	10.1	2.42	10.8	2.71	11.7	3.01	13.3	3.72	13.5	4.00
	35	7.7	1.80	8.5	2.04	9.3	2.31	10.1	2.60	10.8	2.91	11.7	3.25	12.8	4.01	13.0	4.07
	37	7.7	1.92	8.5	2.19	9.3	2.47	10.1	2.79	10.8	3.13	11.7	3.50	12.4	4.10	12.6	4.10
	40	7.7	2.12	8.5	2.43	9.3	2.75	10.1	3.11	10.8	3.50	11.4	3.73	11.7	3.73	11.9	3.73
	43	7.7	2.36	8.5	2.70	9.3	3.07	10.1	3.47	10.6	3.73	10.8	3.73	11.1	3.73	11.3	3.73
	46	7.7	2.62	8.5	3.01	9.3	3.43	9.9	3.73	10.0	3.73	10.2	3.73	10.5	3.73	10.7	3.73

Cooling capacity at rated condition: 12.1 kW (4 HP)																	
Total rated capacity of indoor unit	Outdoor temperature	Indoor temperature															
		20°CDB/15°CWB		23°CDB/16°CWB		24°CDB/17°CWB		26°CDB/18°CWB		27°CDB/19°CWB		28°CDB/20°CWB		30°CDB/22°CWB		32°CDB/23°CWB	
	°CDB	TC	IP	TC	IP	TC	IP	TC	IP	TC	IP	TC	IP	TC	IP	TC	IP
9.6 (80%)	10	6.9	0.98	7.6	1.07	8.3	1.16	9.0	1.24	9.6	1.33	10.4	1.42	11.8	1.60	12.5	1.69
	15	6.9	0.98	7.6	1.07	8.3	1.16	9.0	1.24	9.6	1.33	10.4	1.42	11.8	1.60	12.5	1.75
	21	6.9	1.00	7.6	1.09	8.3	1.21	9.0	1.35	9.6	1.50	10.4	1.66	11.8	2.00	12.5	2.19
	23	6.9	1.05	7.6	1.16	8.3	1.31	9.0	1.45	9.6	1.61	10.4	1.78	11.8	2.15	12.5	2.35
	25	6.9	1.11	7.6	1.25	8.3	1.40	9.0	1.56	9.6	1.73	10.4	1.91	11.8	2.31	12.5	2.53
	27	6.9	1.18	7.6	1.34	8.3	1.50	9.0	1.67	9.6	1.86	10.4	2.05	11.8	2.48	12.5	2.71
	30	6.9	1.31	7.6	1.48	8.3	1.66	9.0	1.85	9.6	2.06	10.4	2.28	11.8	2.75	12.5	3.02
	33	6.9	1.45	7.6	1.64	8.3	1.84	9.0	2.05	9.6	2.28	10.4	2.52	11.8	3.06	12.5	3.36
	35	6.9	1.55	7.6	1.75	8.3	1.96	9.0	2.19	9.6	2.44	10.4	2.70	11.8	3.29	12.5	3.62
	37	6.9	1.65	7.6	1.87	8.3	2.10	9.0	2.35	9.6	2.62	10.4	2.91	11.8	3.55	12.2	3.91
	40	6.9	1.82	7.6	2.06	8.3	2.33	9.0	2.61	9.6	2.92	10.4	3.24	11.0	3.42	11.1	3.42
	43	6.9	2.01	7.6	2.29	8.3	2.59	9.0	2.91	9.6	3.25	10.1	3.46	10.4	3.45	10.6	3.45
	46	6.9	2.24	7.6	2.55	8.3	2.88	9.0	3.25	9.5	3.50	9.6	3.49	9.9	3.48	10.0	3.47
8.4 (70%)	10	6.0	0.87	6.6	0.95	7.2	1.02	7.9	1.10	8.4	1.18	9.1	1.26	10.3	1.41	10.9	1.49
	15	6.0	0.87	6.6	0.95	7.2	1.02	7.9	1.10	8.4	1.18	9.1	1.26	10.3	1.41	10.9	1.49
	21	6.0	0.89	6.6	0.97	7.2	1.05	7.9	1.13	8.4	1.25	9.1	1.38	10.3	1.64	10.9	1.79
	23	6.0	0.93	6.6	1.01	7.2	1.10	7.9	1.22	8.4	1.35	9.1	1.48	10.3	1.76	10.9	1.92
	25	6.0	0.97	6.6	1.06	7.2	1.18	7.9	1.31	8.4	1.44	9.1	1.59	10.3	1.89	10.9	2.06
	27	6.0	1.01	6.6	1.13	7.2	1.26	7.9	1.40	8.4	1.55	9.1	1.70	10.3	2.03	10.9	2.21
	30	6.0	1.12	6.6	1.25	7.2	1.40	7.9	1.55	8.4	1.71	9.1	1.88	10.3	2.25	10.9	2.45
	33	6.0	1.23	6.6	1.38	7.2	1.54	7.9	1.72	8.4	1.90	9.1	2.09	10.3	2.50	10.9	2.72
	35	6.0	1.31	6.6	1.48	7.2	1.65	7.9	1.83	8.4	2.03	9.1	2.23	10.3	2.67	10.9	2.92
	37	6.0	1.40	6.6	1.58	7.2	1.76	7.9	1.96	8.4	2.17	9.1	2.39	10.3	2.88	10.9	3.14
	40	6.0	1.54	6.6	1.74	7.2	1.94	7.9	2.17	8.4	2.40	9.1	2.66	10.3	3.21	10.8	3.42
	43	6.0	1.70	6.6	1.92	7.2	2.16	7.9	2.41	8.4	2.67	9.1	2.96	10.1	3.45	10.3	3.45
	46	6.0	1.88	6.6	2.13	7.2	2.40	7.9	2.68	8.4	2.98	9.1	3.30	9.6	3.48	9.7	3.47
7.2 (60%)	10	5.2	0.76	5.7	0.82	6.2	0.89	6.7	0.96	7.2	1.03	7.8	1.09	8.8	1.23	9.4	1.29
	15	5.2	0.68	5.7	0.74	6.2	0.89	6.7	0.96	7.2	1.03	7.8	1.09	8.8	1.23	9.4	1.29
	21	5.2	0.77	5.7	0.84	6.2	0.91	6.7	0.98	7.2	1.05	7.8	1.12	8.8	1.32	9.4	1.43
	23	5.2	0.81	5.7	0.88	6.2	0.95	6.7	1.03	7.2	1.10	7.8	1.20	8.8	1.42	9.4	1.54
	25	5.2	0.84	5.7	0.92	6.2	1.00	6.7	1.08	7.2	1.18	7.8	1.29	8.8	1.53	9.4	1.65
	27	5.2	0.88	5.7	0.96	6.2	1.05	6.7	1.15	7.2	1.27	7.8	1.39	8.8	1.64	9.4	1.77
	30	5.2	0.94	5.7	1.04	6.2	1.16	6.7	1.28	7.2	1.40	7.8	1.53	8.8	1.81	9.4	1.96
	33	5.2	1.03	5.7	1.15	6.2	1.28	6.7	1.41	7.2	1.55	7.8	1.70	8.8	2.01	9.4	2.17
	35	5.2	1.10	5.7	1.23	6.2	1.36	6.7	1.51	7.2	1.65	7.8	1.81	8.8	2.15	9.4	2.33
	37	5.2	1.17	5.7	1.31	6.2	1.45	6.7	1.61	7.2	1.77	7.8	1.93	8.8	2.29	9.4	2.49
	40	5.2	1.28	5.7	1.44	6.2	1.60	6.7	1.77	7.2	1.95	7.8	2.14	8.8	2.55	9.4	2.78
	43	5.2	1.41	5.7	1.59	6.2	1.77	6.7	1.96	7.2	2.16	7.8	2.38	8.8	2.84	9.4	3.09
	46	5.2	1.56	5.7	1.75	6.2	1.96	6.7	2.17	7.2	2.40	7.8	2.64	8.8	3.17	9.4	3.46
6.1 (50%)	10	4.3	0.65	4.7	0.70	5.2	0.76	5.6	0.82	6.1	0.87	6.5	0.93	7.4	1.04	7.8	1.09
	15	4.3	0.65	4.7	0.70	5.2	0.76	5.6	0.82	6.1	0.87	6.5	0.93	7.4	1.04	7.8	1.09
	21	4.3	0.66	4.7	0.72	5.2	0.78	5.6	0.83	6.1	0.89	6.5	0.95	7.4	1.06	7.8	1.12
	23	4.3	0.69	4.7	0.75	5.2	0.81	5.6	0.87	6.1	0.93	6.5	0.99	7.4	1.12	7.8	1.21
	25	4.3	0.72	4.7	0.78	5.2	0.85	5.6	0.91	6.1	0.97	6.5	1.04	7.4	1.20	7.8	1.30
	27	4.3	0.75	4.7	0.82	5.2	0.88	5.6	0.95	6.1	1.02	6.5	1.10	7.4	1.29	7.8	1.39
	30	4.3	0.80	4.7	0.87	5.2	0.94	5.6	1.03	6.1	1.12	6.5	1.22	7.4	1.43	7.8	1.54
	33	4.3	0.85	4.7	0.94	5.2	1.03	5.6	1.13	6.1	1.24	6.5	1.35	7.4	1.58	7.8	1.70
	35	4.3	0.90	4.7	1.00	5.2	1.10	5.6	1.21	6.1	1.32	6.5	1.44	7.4	1.68	7.8	1.82
	37	4.3	0.95	4.7	1.06	5.2	1.17	5.6	1.29	6.1	1.41	6.5	1.53	7.4	1.80	7.8	1.94
	40	4.3	1.05	4.7	1.16	5.2	1.29	5.6	1.42	6.1	1.55	6.5	1.69	7.4	1.99	7.8	2.15
	43	4.3	1.15	4.7	1.28	5.2	1.42	5.6	1.56	6.1	1.71	6.5	1.87	7.4	2.21	7.8	2.38
	46	4.3	1.26	4.7	1.41	5.2	1.56	5.6	1.73	6.1	1.89	6.5	2.07	7.4	2.45	7.8	2.65

■ Model: AJ∗045LCLDH

Cooling capacity at rated condition: 14.0 kW (5 HP)																	
Total rated capacity of indoor unit	Outdoor temperature	Indoor temperature															
		20°CDB/15°CWB		23°CDB/16°CWB		24°CDB/17°CWB		26°CDB/18°CWB		27°CDB/19°CWB		28°CDB/20°CWB		30°CDB/22°CWB		32°CDB/23°CWB	
	°CDB	TC	IP	TC	IP	TC	IP	TC	IP	TC	IP	TC	IP	TC	IP	TC	IP
18.2 (130%)	10	12.9	1.95	14.2	2.14	15.6	2.33	16.9	2.52	18.2	2.70	18.7	3.06	19.5	3.47	19.9	3.50
	15	12.9	1.95	14.2	2.18	15.6	2.52	16.9	2.88	17.7	3.29	18.0	3.73	18.8	3.87	19.1	3.91
	21	12.9	2.36	14.2	2.74	15.6	3.16	16.5	3.62	16.9	4.13	17.2	4.27	17.9	4.36	18.3	4.40
	23	12.9	2.54	14.2	2.95	15.6	3.40	16.2	3.90	16.6	4.39	16.9	4.43	17.6	4.52	18.0	4.57
	25	12.9	2.73	14.2	3.17	15.6	3.66	16.0	4.19	16.3	4.55	16.6	4.59	17.3	4.69	17.7	4.74
	27	12.9	2.93	14.2	3.41	15.4	3.93	15.7	4.51	16.0	4.71	16.4	4.76	17.0	4.86	17.4	4.91
	30	12.9	3.26	14.2	3.79	15.0	4.38	15.3	4.91	15.6	4.96	15.9	5.02	16.6	5.13	16.9	5.19
	33	12.9	3.62	14.2	4.23	14.5	4.92	14.8	5.17	15.1	5.23	15.5	5.29	16.1	5.41	16.4	5.47
	35	12.9	3.89	13.9	4.56	14.2	5.29	14.5	5.35	14.8	5.41	15.1	5.48	15.8	5.60	16.1	5.67
	37	12.9	4.20	13.6	4.93	13.9	5.47	14.2	5.53	14.5	5.60	14.8	5.66	15.4	5.79	15.7	5.86
	40	12.9	4.71	13.2	4.92	13.5	4.92	13.8	4.92	14.1	4.92	14.3	4.92	14.7	4.91	14.9	4.91
	43	12.5	4.92	12.7	4.92	12.9	4.92	13.1	4.92	13.3	4.92	13.5	4.92	13.9	4.92	14.1	4.92
	46	11.7	4.92	11.9	4.92	12.1	4.92	12.3	4.92	12.5	4.92	12.7	4.92	13.1	4.92	13.3	4.92
16.8 (120%)	10	11.9	1.81	13.2	1.98	14.4	2.16	15.6	2.33	16.8	2.50	18.0	2.68	19.2	3.34	19.6	3.46
	15	11.9	1.81	13.2	1.98	14.4	2.21	15.6	2.52	16.8	2.86	17.8	3.23	18.6	3.82	18.9	3.86
	21	11.9	2.10	13.2	2.42	14.4	2.78	15.6	3.16	16.7	3.59	17.0	4.05	17.7	4.30	18.1	4.35
	23	11.9	2.26	13.2	2.60	14.4	2.99	15.6	3.40	16.4	3.86	16.8	4.36	17.4	4.47	17.8	4.51
	25	11.9	2.42	13.2	2.80	14.4	3.21	15.6	3.66	16.2	4.16	16.5	4.54	17.1	4.63	17.5	4.68
	27	11.9	2.60	13.2	3.01	14.4	3.45	15.6	3.94	15.9	4.47	16.2	4.70	16.9	4.80	17.2	4.85
	30	11.9	2.89	13.2	3.34	14.4	3.84	15.1	4.39	15.5	4.91	15.8	4.96	16.4	5.07	16.7	5.12
	33	11.9	3.21	13.2	3.72	14.4	4.29	14.7	4.93	15.0	5.17	15.3	5.23	15.9	5.35	16.3	5.41
	35	11.9	3.44	13.2	4.00	14.1	4.63	14.4	5.29	14.7	5.35	15.0	5.41	15.6	5.54	15.9	5.60
	37	11.9	3.70	13.2	4.31	13.8	5.00	14.1	5.47	14.4	5.54	14.7	5.60	15.3	5.71	15.6	5.71
	40	11.9	4.14	13.1	4.84	13.4	4.95	13.7	4.95	13.9	4.95	14.2	4.95	14.6	4.95	14.8	4.95
	43	11.9	4.64	12.6	4.96	12.8	4.96	13.0	4.95	13.2	4.95	13.4	4.95	13.8	4.95	14.0	4.95
	46	11.6	4.96	11.8	4.96	12.0	4.96	12.2	4.96	12.4	4.96	12.6	4.96	13.0	4.95	13.2	4.95
15.4 (110%)	10	10.9	1.67	12.1	1.83	13.2	1.99	14.3	2.15	15.4	2.30	16.5	2.46	18.7	2.84	19.3	3.16
	15	10.9	1.67	12.1	1.83	13.2	1.99	14.3	2.19	15.4	2.47	16.5	2.78	18.3	3.46	18.7	3.80
	21	10.9	1.85	12.1	2.13	13.2	2.43	14.3	2.75	15.4	3.10	16.5	3.48	17.5	4.25	17.8	4.29
	23	10.9	1.99	12.1	2.29	13.2	2.61	14.3	2.96	15.4	3.34	16.5	3.75	17.2	4.41	17.6	4.45
	25	10.9	2.14	12.1	2.46	13.2	2.81	14.3	3.18	15.4	3.59	16.3	4.04	17.0	4.57	17.3	4.61
	27	10.9	2.30	12.1	2.64	13.2	3.01	14.3	3.42	15.4	3.86	16.0	4.34	16.7	4.73	17.0	4.78
	30	10.9	2.55	12.1	2.93	13.2	3.35	14.3	3.80	15.3	4.30	15.6	4.86	16.2	5.00	16.6	5.05
	33	10.9	2.83	12.1	3.26	13.2	3.72	14.3	4.24	14.9	4.82	15.2	5.16	15.8	5.24	16.1	5.24
	35	10.9	3.03	12.1	3.49	13.2	4.01	14.3	4.58	14.6	5.22	14.9	5.24	15.5	5.24	15.8	5.24
	37	10.9	3.25	12.1	3.76	13.2	4.32	14.0	4.95	14.3	5.24	14.6	5.24	15.2	5.24	15.5	5.24
	40	10.9	3.63	12.1	4.21	13.2	4.85	13.6	4.99	13.8	4.99	14.0	4.99	14.4	4.99	14.6	4.99
	43	10.9	4.05	12.1	4.71	12.6	4.99	12.8	4.99	13.0	4.99	13.2	4.99	13.6	4.99	13.8	4.99
	46	10.9	4.54	11.7	4.99	11.9	4.99	12.1	4.99	12.3	4.99	12.5	4.99	12.8	4.99	13.0	4.99
14.0 (100%)	10	9.9	1.53	11.0	1.67	12.0	1.82	13.0	1.96	14.0	2.10	15.0	2.25	17.0	2.54	18.1	2.68
	15	9.9	1.53	11.0	1.67	12.0	1.82	13.0	1.96	14.0	2.12	15.0	2.37	17.0	2.93	17.8	3.13
	21	9.9	1.62	11.0	1.86	12.0	2.11	13.0	2.38	14.0	2.67	15.0	2.98	16.7	3.52	17.1	3.55
	23	9.9	1.75	11.0	2.00	12.0	2.27	13.0	2.56	14.0	2.87	15.0	3.20	16.5	3.67	16.8	3.70
	25	9.9	1.88	11.0	2.15	12.0	2.44	13.0	2.75	14.0	3.08	15.0	3.45	16.2	3.81	16.5	3.84
	27	9.9	2.02	11.0	2.30	12.0	2.61	13.0	2.95	14.0	3.31	15.0	3.70	16.0	3.95	16.3	3.99
	30	9.9	2.24	11.0	2.56	12.0	2.90	13.0	3.28	14.0	3.69	15.0	4.09	15.6	4.17	15.9	4.21
	33	9.9	2.48	11.0	2.84	12.0	3.22	13.0	3.64	14.0	4.11	14.6	4.32	15.1	4.40	15.4	4.45
	35	9.9	2.65	11.0	3.04	12.0	3.46	13.0	3.92	14.0	4.43	14.3	4.47	14.9	4.57	15.1	4.61
	37	9.9	2.84	11.0	3.26	12.0	3.72	13.0	4.23	13.7	4.59	14.0	4.63	14.6	4.73	14.8	4.78
	40	9.9	3.16	11.0	3.64	12.0	4.16	13.0	4.74	13.2	4.78	13.4	4.78	13.8	4.78	14.1	4.78
	43	9.9	3.52	11.0	4.06	12.0	4.66	12.3	4.78	12.5	4.78	12.7	4.78	13.1	4.78	13.3	4.78
	46	9.9	3.93	11.0	4.55	11.4	4.78	11.6	4.78	11.8	4.78	12.0	4.78	12.3	4.78	12.5	4.78
12.6 (90%)	10	9.0	1.39	9.9	1.52	10.8	1.65	11.7	1.78	12.6	1.91	13.5	2.04	15.3	2.30	16.2	2.42
	15	9.0	1.39	9.9	1.52	10.8	1.65	11.7	1.78	12.6	1.91	13.5	2.04	15.3	2.45	16.2	2.70
	21	9.0	1.42	9.9	1.61	10.8	1.81	11.7	2.03	12.6	2.27	13.5	2.52	15.3	3.08	16.2	3.39
	23	9.0	1.52	9.9	1.73	10.8	1.95	11.7	2.19	12.6	2.44	13.5	2.71	15.3	3.32	16.2	3.64
	25	9.0	1.63	9.9	1.86	10.8	2.10	11.7	2.35	12.6	2.63	13.5	2.92	15.3	3.57	16.0	3.78
	27	9.0	1.75	9.9	1.99	10.8	2.25	11.7	2.52	12.6	2.82	13.5	3.13	15.3	3.83	15.7	3.93
	30	9.0	1.94	9.9	2.21	10.8	2.50	11.7	2.80	12.6	3.13	13.5	3.49	15.1	4.11	15.3	4.14
	33	9.0	2.15	9.9	2.45	10.8	2.77	11.7	3.11	12.6	3.48	13.5	3.88	14.6	4.31	14.8	4.31
	35	9.0	2.30	9.9	2.62	10.8	2.96	11.7	3.33	12.6	3.74	13.5	4.18	14.1	4.31	14.3	4.31
	37	9.0	2.46	9.9	2.80	10.8	3.18	11.7	3.59	12.6	4.03	13.2	4.31	13.6	4.31	13.8	4.31
	40	9.0	2.73	9.9	3.12	10.8	3.55	11.7	4.01	12.3	4.31	12.5	4.31	12.9	4.31	13.1	4.31
	43	9.0	3.03	9.9	3.48	10.8	3.96	11.5	4.31	11.6	4.31	11.8	4.31	12.2	4.31	12.4	4.31
	46	9.0	3.38	9.9	3.88	10.6	4.31	10.8	4.31	11.0	4.31	11.1	4.31	11.5	4.31	11.7	4.31
11.2 (80%)	10	8.0	1.24	8.8	1.36	9.6	1.47	10.4	1.59	11.2	1.71	12.0	1.82	13.6	2.05	14.4	2.17
	15	8.0	1.24	8.8	1.36	9.6	1.47	10.4	1.59	11.2	1.71	12.0	1.82	13.6	2.05	14.4	2.23
	21	8.0	1.27	8.8	1.39	9.6	1.54	10.4	1.72	11.2	1.91	12.0	2.12	13.6	2.56	14.4	2.80
	23	8.0	1.33	8.8	1.48	9.6	1.66	10.4	1.85	11.2	2.06	12.0	2.28	13.6	2.75	14.4	3.01
	25	8.0	1.41	8.8	1.59	9.6	1.79	10.4	1.99	11.2	2.21	12.0	2.45	13.6	2.96	14.4	3.24
	27	8.0	1.51	8.8	1.71	9.6	1.92	10.4	2.14	11.2	2.37	12.0	2.63	13.6	3.18	14.4	3.48
	30	8.0	1.67	8.8	1.89	9.6	2.13	10.4	2.37	11.2	2.64	12.0	2.92	13.6	3.53	14.4	3.87
	33	8.0	1.85	8.8	2.09	9.6	2.35	10.4	2.63	11.2	2.92	12.0	3.24	13.5	3.93	13.7	4.21
	35	8.0	1.98	8.8	2.24	9.6	2.52	10.4	2.82	11.2	3.13	12.0	3.47	13.1	4.24	13.2	4.23
	37	8.0	2.11	8.8	2.39	9.6	2.69	10.4	3.01	11.2	3.36	12.0	3.74	12.6	4.26	12.8	4.25
	40	8.0	2.33	8.8	2.65	9.6	2.99	10.4	3.36	11.2	3.75	11.5	3.84	11.9	3.84	12.1	3.84
	43	8.0	2.59	8.8	2.95	9.6	3.33	10.4	3.75	10.7	3.84	10.9	3.84	11.2	3.84	11.4	3.84
	46	8.0	2.87	8.8	3.28	9.6	3.72	9.9	3.84	10.1	3.84	10.2	3.84	10.6	3.84	10.7	3.84

Cooling capacity at rated condition: 14.0 kW (5 HP)																	
Total rated capacity of indoor unit	Outdoor temperature	Indoor temperature															
		20°CDB/15°CWB		23°CDB/16°CWB		24°CDB/17°CWB		26°CDB/18°CWB		27°CDB/19°CWB		28°CDB/20°CWB		30°CDB/22°CWB		32°CDB/23°CWB	
	°CDB	TC	IP	TC	IP	TC	IP	TC	IP	TC	IP	TC	IP	TC	IP	TC	IP
9.8 (70%)	10	7.0	1.10	7.7	1.20	8.4	1.30	9.1	1.41	9.8	1.51	10.5	1.61	11.9	1.81	12.6	1.91
	15	7.0	1.10	7.7	1.20	8.4	1.30	9.1	1.41	9.8	1.51	10.5	1.61	11.9	1.81	12.6	1.91
	21	7.0	1.13	7.7	1.23	8.4	1.34	9.1	1.44	9.8	1.59	10.5	1.75	11.9	2.09	12.6	2.28
	23	7.0	1.18	7.7	1.29	8.4	1.40	9.1	1.55	9.8	1.71	10.5	1.88	11.9	2.25	12.6	2.45
	25	7.0	1.23	7.7	1.35	8.4	1.50	9.1	1.67	9.8	1.84	10.5	2.02	11.9	2.42	12.6	2.64
	27	7.0	1.29	7.7	1.44	8.4	1.61	9.1	1.79	9.8	1.97	10.5	2.17	11.9	2.60	12.6	2.83
	30	7.0	1.42	7.7	1.60	8.4	1.78	9.1	1.98	9.8	2.19	10.5	2.41	11.9	2.89	12.6	3.15
	33	7.0	1.57	7.7	1.77	8.4	1.98	9.1	2.20	9.8	2.43	10.5	2.67	11.9	3.20	12.6	3.49
	35	7.0	1.68	7.7	1.89	8.4	2.11	9.1	2.35	9.8	2.60	10.5	2.86	11.9	3.44	12.6	3.75
	37	7.0	1.79	7.7	2.02	8.4	2.26	9.1	2.51	9.8	2.78	10.5	3.06	11.9	3.70	12.4	4.05
	40	7.0	1.97	7.7	2.22	8.4	2.49	9.1	2.78	9.8	3.09	10.5	3.42	11.1	3.57	11.2	3.56
	43	7.0	2.18	7.7	2.47	8.4	2.77	9.1	3.10	9.8	3.44	10.2	3.61	10.5	3.59	10.7	3.59
	46	7.0	2.42	7.7	2.74	8.4	3.08	9.1	3.45	9.5	3.64	9.7	3.64	10.0	3.62	10.1	3.62
8.4 (60%)	10	6.0	0.96	6.6	1.05	7.2	1.13	7.8	1.22	8.4	1.31	9.0	1.39	10.2	1.57	10.8	1.65
	15	6.0	0.96	6.6	1.05	7.2	1.13	7.8	1.22	8.4	1.31	9.0	1.39	10.2	1.57	10.8	1.65
	21	6.0	0.98	6.6	1.07	7.2	1.16	7.8	1.25	8.4	1.34	9.0	1.43	10.2	1.69	10.8	1.83
	23	6.0	1.03	6.6	1.12	7.2	1.21	7.8	1.31	8.4	1.40	9.0	1.53	10.2	1.81	10.8	1.96
	25	6.0	1.07	6.6	1.17	7.2	1.27	7.8	1.37	8.4	1.51	9.0	1.65	10.2	1.95	10.8	2.11
	27	6.0	1.12	6.6	1.22	7.2	1.33	7.8	1.47	8.4	1.61	9.0	1.77	10.2	2.09	10.8	2.27
	30	6.0	1.19	6.6	1.33	7.2	1.47	7.8	1.63	8.4	1.79	9.0	1.96	10.2	2.32	10.8	2.52
	33	6.0	1.31	6.6	1.47	7.2	1.63	7.8	1.80	8.4	1.98	9.0	2.17	10.2	2.57	10.8	2.79
	35	6.0	1.40	6.6	1.57	7.2	1.74	7.8	1.92	8.4	2.12	9.0	2.32	10.2	2.75	10.8	2.99
	37	6.0	1.49	6.6	1.67	7.2	1.86	7.8	2.06	8.4	2.26	9.0	2.48	10.2	2.95	10.8	3.20
	40	6.0	1.64	6.6	1.84	7.2	2.05	7.8	2.27	8.4	2.50	9.0	2.75	10.2	3.28	10.8	3.57
	43	6.0	1.81	6.6	2.03	7.2	2.27	7.8	2.52	8.4	2.78	9.0	3.06	10.1	3.60	10.3	3.60
	46	6.0	2.00	6.6	2.25	7.2	2.51	7.8	2.80	8.4	3.09	9.0	3.41	9.6	3.63	9.8	3.62
7.0 (50%)	10	5.0	0.82	5.5	0.89	6.0	0.96	6.5	1.04	7.0	1.11	7.5	1.18	8.5	1.32	9.0	1.40
	15	5.0	0.82	5.5	0.89	6.0	0.96	6.5	1.04	7.0	1.11	7.5	1.18	8.5	1.32	9.0	1.40
	21	5.0	0.84	5.5	0.91	6.0	0.99	6.5	1.06	7.0	1.13	7.5	1.21	8.5	1.36	9.0	1.43
	23	5.0	0.87	5.5	0.95	6.0	1.03	6.5	1.11	7.0	1.19	7.5	1.26	8.5	1.43	9.0	1.54
	25	5.0	0.91	5.5	0.99	6.0	1.08	6.5	1.16	7.0	1.24	7.5	1.32	8.5	1.53	9.0	1.65
	27	5.0	0.95	5.5	1.04	6.0	1.12	6.5	1.21	7.0	1.29	7.5	1.40	8.5	1.64	9.0	1.77
	30	5.0	1.01	5.5	1.11	6.0	1.20	6.5	1.31	7.0	1.43	7.5	1.56	8.5	1.82	9.0	1.96
	33	5.0	1.08	5.5	1.19	6.0	1.31	6.5	1.44	7.0	1.58	7.5	1.72	8.5	2.02	9.0	2.17
	35	5.0	1.14	5.5	1.27	6.0	1.40	6.5	1.54	7.0	1.69	7.5	1.84	8.5	2.16	9.0	2.33
	37	5.0	1.21	5.5	1.35	6.0	1.50	6.5	1.64	7.0	1.80	7.5	1.96	8.5	2.30	9.0	2.49
	40	5.0	1.33	5.5	1.49	6.0	1.65	6.5	1.81	7.0	1.98	7.5	2.16	8.5	2.55	9.0	2.76
	43	5.0	1.46	5.5	1.63	6.0	1.81	6.5	2.00	7.0	2.19	7.5	2.40	8.5	2.83	9.0	3.07
	46	5.0	1.61	5.5	1.80	6.0	2.00	6.5	2.21	7.0	2.43	7.5	2.66	8.5	3.15	9.0	3.41

MODEL SELECTION

■ Model: AJ∗054LCLDH

Cooling capacity at rated condition: 15.1 kW (6 HP)																	
Total rated capacity of indoor unit	Outdoor temperature	Indoor temperature															
		20°CDB/15°CWB		23°CDB/16°CWB		24°CDB/17°CWB		26°CDB/18°CWB		27°CDB/19°CWB		28°CDB/20°CWB		30°CDB/22°CWB		32°CDB/23°CWB	
	°CDB	TC	IP	TC	IP	TC	IP	TC	IP	TC	IP	TC	IP	TC	IP	TC	IP
19.6 (130%)	10	13.9	2.21	15.4	2.42	16.8	2.64	18.2	2.85	19.0	3.06	19.4	3.45	20.3	3.92	20.7	3.96
	15	13.9	2.21	15.4	2.46	16.8	2.84	18.0	3.25	18.4	3.71	18.8	4.22	19.6	4.38	20.0	4.42
	21	13.9	2.67	15.4	3.10	16.8	3.57	17.2	4.09	17.6	4.67	17.9	4.84	18.7	4.94	19.0	4.99
	23	13.9	2.87	15.4	3.33	16.5	3.85	16.9	4.41	17.3	4.97	17.6	5.02	18.3	5.13	18.7	5.18
	25	13.9	3.09	15.4	3.59	16.3	4.14	16.6	4.75	17.0	5.16	17.3	5.21	18.0	5.32	18.4	5.37
	27	13.9	3.32	15.4	3.86	16.0	4.45	16.3	5.12	16.7	5.34	17.0	5.40	17.7	5.51	18.1	5.57
	30	13.9	3.69	15.2	4.30	15.5	4.97	15.9	5.57	16.2	5.64	16.6	5.70	17.2	5.83	17.6	5.85
	33	13.9	4.10	14.8	4.80	15.1	5.58	15.4	5.85	15.8	5.85	16.1	5.85	16.7	5.85	17.1	5.85
	35	13.9	4.42	14.5	5.18	14.8	5.85	15.1	5.85	15.4	5.85	15.8	5.85	16.4	5.85	16.7	5.85
	37	13.9	4.77	14.2	5.60	14.5	5.86	14.8	5.85	15.1	5.85	15.4	5.85	16.1	5.85	16.4	5.85
	40	13.3	4.89	13.5	4.89	13.8	4.89	14.0	4.89	14.2	4.89	14.4	4.88	14.9	4.88	15.1	4.88
	43	12.5	4.89	12.7	4.89	12.9	4.89	13.2	4.89	13.4	4.89	13.6	4.89	14.0	4.89	14.2	4.89
	46	11.8	4.89	12.0	4.89	12.2	4.89	12.4	4.89	12.6	4.89	12.8	4.89	13.2	4.89	13.4	4.89
18.1 (120%)	10	12.9	2.05	14.2	2.24	15.5	2.44	16.8	2.64	18.1	2.84	19.2	3.03	20.1	3.77	20.5	3.91
	15	12.9	2.05	14.2	2.24	15.5	2.49	16.8	2.84	18.1	3.23	18.6	3.65	19.4	4.33	19.7	4.37
	21	12.9	2.37	14.2	2.73	15.5	3.14	16.8	3.58	17.4	4.06	17.8	4.59	18.5	4.88	18.8	4.93
	23	12.9	2.55	14.2	2.94	15.5	3.38	16.8	3.85	17.1	4.37	17.5	4.95	18.2	5.07	18.5	5.12
	25	12.9	2.74	14.2	3.17	15.5	3.64	16.5	4.15	16.8	4.71	17.2	5.15	17.9	5.26	18.2	5.31
	27	12.9	2.94	14.2	3.40	15.5	3.91	16.2	4.46	16.5	5.07	16.9	5.34	17.6	5.45	17.9	5.50
	30	12.9	3.27	14.2	3.79	15.4	4.35	15.8	4.98	16.1	5.57	16.4	5.63	17.1	5.76	17.4	5.82
	33	12.9	3.64	14.2	4.21	15.0	4.86	15.3	5.59	15.6	5.88	16.0	5.90	16.6	5.90	17.0	5.90
	35	12.9	3.90	14.2	4.54	14.7	5.26	15.0	5.90	15.3	5.90	15.7	5.90	16.3	5.90	16.6	5.90
	37	12.9	4.20	14.1	4.90	14.4	5.68	14.7	5.90	15.0	5.90	15.3	5.90	16.0	5.90	16.3	5.90
	40	12.9	4.70	13.4	4.92	13.6	4.92	13.9	4.92	14.1	4.92	14.3	4.92	14.7	4.92	15.0	4.92
	43	12.4	4.93	12.6	4.93	12.8	4.93	13.0	4.93	13.3	4.93	13.5	4.92	13.9	4.92	14.1	4.92
	46	11.7	4.93	11.9	4.93	12.1	4.93	12.3	4.93	12.5	4.93	12.7	4.93	13.1	4.93	13.3	4.93
16.6 (110%)	10	11.8	1.89	13.0	2.07	14.2	2.25	15.4	2.43	16.6	2.61	17.8	2.79	19.8	3.20	20.2	3.57
	15	11.8	1.89	13.0	2.07	14.2	2.25	15.4	2.47	16.6	2.79	17.8	3.13	19.1	3.91	19.5	4.31
	21	11.8	2.09	13.0	2.40	14.2	2.74	15.4	3.11	16.6	3.51	17.6	3.94	18.3	4.81	18.6	4.86
	23	11.8	2.25	13.0	2.59	14.2	2.95	15.4	3.35	16.6	3.78	17.3	4.25	18.0	5.00	18.4	5.05
	25	11.8	2.42	13.0	2.78	14.2	3.17	15.4	3.60	16.6	4.07	17.0	4.57	17.7	5.19	18.1	5.24
	27	11.8	2.60	13.0	2.99	14.2	3.41	15.4	3.87	16.4	4.38	16.7	4.92	17.4	5.37	17.8	5.43
	30	11.8	2.89	13.0	3.32	14.2	3.80	15.4	4.31	16.0	4.88	16.3	5.51	17.0	5.65	17.3	5.65
	33	11.8	3.20	13.0	3.69	14.2	4.22	15.2	4.82	15.5	5.48	15.9	5.65	16.5	5.65	16.8	5.65
	35	11.8	3.43	13.0	3.96	14.2	4.55	14.9	5.20	15.2	5.65	15.5	5.65	16.2	5.65	16.5	5.65
	37	11.8	3.68	13.0	4.27	14.2	4.91	14.6	5.63	14.9	5.65	15.2	5.65	15.8	5.65	16.2	5.65
	40	11.8	4.12	13.0	4.78	13.5	4.96	13.7	4.96	13.9	4.96	14.1	4.96	14.6	4.96	14.8	4.96
	43	11.8	4.60	12.5	4.96	12.7	4.96	12.9	4.96	13.1	4.96	13.3	4.96	13.7	4.96	13.9	4.96
	46	11.6	4.96	11.8	4.96	11.9	4.96	12.1	4.96	12.3	4.96	12.5	4.96	12.9	4.96	13.1	4.96
15.1 (100%)	10	10.7	1.72	11.8	1.89	12.9	2.05	14.0	2.22	15.1	2.38	16.2	2.55	18.4	2.88	19.5	3.04
	15	10.7	1.72	11.8	1.89	12.9	2.05	14.0	2.22	15.1	2.39	16.2	2.67	18.4	3.31	19.2	3.55
	21	10.7	1.83	11.8	2.09	12.9	2.38	14.0	2.68	15.1	3.01	16.2	3.37	18.1	3.99	18.4	4.03
	23	10.7	1.97	11.8	2.25	12.9	2.56	14.0	2.89	15.1	3.24	16.2	3.63	17.8	4.15	18.1	4.19
	25	10.7	2.12	11.8	2.42	12.9	2.75	14.0	3.11	15.1	3.49	16.2	3.90	17.5	4.32	17.8	4.35
	27	10.7	2.28	11.8	2.60	12.9	2.96	14.0	3.34	15.1	3.75	16.2	4.20	17.2	4.48	17.5	4.52
	30	10.7	2.53	11.8	2.89	12.9	3.29	14.0	3.72	15.1	4.18	16.1	4.64	16.8	4.73	17.1	4.77
	33	10.7	2.80	11.8	3.21	12.9	3.65	14.0	4.13	15.1	4.66	15.7	4.90	16.3	5.00	16.6	5.05
	35	10.7	3.00	11.8	3.44	12.9	3.92	14.0	4.45	15.1	5.03	15.4	5.08	16.0	5.14	16.2	5.14
	37	10.7	3.21	11.8	3.69	12.9	4.22	14.0	4.80	14.7	5.14	14.9	5.14	15.4	5.14	15.6	5.14
	40	10.7	3.58	11.8	4.13	12.9	4.73	13.5	5.00	13.7	5.00	13.9	5.00	14.4	5.00	14.6	5.00
	43	10.7	3.99	11.8	4.61	12.5	5.00	12.7	5.00	12.9	5.00	13.1	5.00	13.6	5.00	13.8	5.00
	46	10.7	4.46	11.6	5.00	11.8	5.00	12.0	5.00	12.2	5.00	12.4	5.00	12.8	5.00	13.0	5.00
13.5 (90%)	10	9.7	1.56	10.6	1.71	11.6	1.86	12.6	2.01	13.5	2.15	14.6	2.30	16.5	2.60	17.5	2.75
	15	9.7	1.56	10.6	1.71	11.6	1.86	12.6	2.01	13.5	2.15	14.6	2.30	16.5	2.77	17.5	3.05
	21	9.7	1.60	10.6	1.81	11.6	2.04	12.6	2.30	13.5	2.56	14.6	2.85	16.5	3.48	17.5	3.84
	23	9.7	1.71	10.6	1.95	11.6	2.20	12.6	2.47	13.5	2.76	14.6	3.07	16.5	3.75	17.5	4.13
	25	9.7	1.84	10.6	2.10	11.6	2.37	12.6	2.66	13.5	2.97	14.6	3.30	16.5	4.04	17.2	4.29
	27	9.7	1.98	10.6	2.25	11.6	2.54	12.6	2.85	13.5	3.19	14.6	3.55	16.5	4.34	17.0	4.45
	30	9.7	2.20	10.6	2.50	11.6	2.83	12.6	3.17	13.5	3.55	14.6	3.95	16.2	4.64	16.5	4.64
	33	9.7	2.43	10.6	2.77	11.6	3.13	12.6	3.52	13.5	3.94	14.6	4.39	15.4	4.64	15.6	4.64
	35	9.7	2.60	10.6	2.97	11.6	3.36	12.6	3.78	13.5	4.24	14.4	4.64	14.9	4.64	15.1	4.64
	37	9.7	2.78	10.6	3.18	11.6	3.60	12.6	4.07	13.5	4.57	13.9	4.64	14.3	4.64	14.6	4.64
	40	9.7	3.09	10.6	3.54	11.6	4.02	12.6	4.55	12.9	4.64	13.1	4.64	13.6	4.64	13.8	4.64
	43	9.7	3.44	10.6	3.95	11.6	4.50	12.0	4.64	12.2	4.64	12.4	4.64	12.8	4.64	13.0	4.64
	46	9.7	3.83	10.6	4.41	11.1	4.64	11.3	4.64	11.5	4.64	11.7	4.64	12.0	4.64	12.2	4.64
12.0 (80%)	10	8.6	1.40	9.5	1.53	10.3	1.66	11.2	1.80	12.0	1.93	13.0	2.06	14.7	2.32	15.6	2.45
	15	8.6	1.40	9.5	1.53	10.3	1.66	11.2	1.80	12.0	1.93	13.0	2.06	14.7	2.32	15.6	2.51
	21	8.6	1.43	9.5	1.57	10.3	1.74	11.2	1.94	12.0	2.16	13.0	2.39	14.7	2.89	15.6	3.16
	23	8.6	1.50	9.5	1.67	10.3	1.87	11.2	2.09	12.0	2.32	13.0	2.57	14.7	3.11	15.6	3.41
	25	8.6	1.58	9.5	1.79	10.3	2.01	11.2	2.25	12.0	2.50	13.0	2.76	14.7	3.35	15.6	3.66
	27	8.6	1.70	9.5	1.92	10.3	2.16	11.2	2.42	12.0	2.68	13.0	2.97	14.7	3.60	15.6	3.94
	30	8.6	1.89	9.5	2.14	10.3	2.40	11.2	2.68	12.0	2.98	13.0	3.30	14.7	4.00	15.4	4.26
	33	8.6	2.09	9.5	2.37	10.3	2.66	11.2	2.98	12.0	3.31	13.0	3.67	14.4	4.29	14.6	4.28
	35	8.6	2.23	9.5	2.53	10.3	2.85	11.2	3.19	12.0	3.55	13.0	3.94	14.0	4.31	14.2	4.30
	37	8.6	2.39	9.5	2.71	10.3	3.05	11.2	3.42	12.0	3.81	13.0	4.24	13.5	4.33	13.7	4.32
	40	8.6	2.64	9.5	3.00	10.3	3.39	11.2	3.81	11.9	4.14	12.1	4.14	12.5	4.14	12.7	4.14
	43	8.6	2.93	9.5	3.34	10.3	3.78	11.0	4.14	11.2	4.14	11.4	4.14	11.8	4.14	12.0	4.14
	46	8.6	3.26	9.5	3.72	10.2	4.14	10.4	4.14	10.6	4.14	10.7	4.14	11.1	4.14	11.3	4.14

Cooling capacity at rated condition: 15.1 kW (6 HP)																	
Total rated capacity of indoor unit	Outdoor temperature	Indoor temperature															
		20°CDB/15°CWB		23°CDB/16°CWB		24°CDB/17°CWB		26°CDB/18°CWB		27°CDB/19°CWB		28°CDB/20°CWB		30°CDB/22°CWB		32°CDB/23°CWB	
	°CDB	TC	IP	TC	IP	TC	IP	TC	IP	TC	IP	TC	IP	TC	IP	TC	IP
10.5 (70%)	10	7.5	1.24	8.3	1.36	9.0	1.47	9.8	1.59	10.5	1.70	11.3	1.82	12.9	2.05	13.6	2.16
	15	7.5	1.24	8.3	1.36	9.0	1.47	9.8	1.59	10.5	1.70	11.3	1.82	12.9	2.05	13.6	2.16
	21	7.5	1.27	8.3	1.39	9.0	1.51	9.8	1.62	10.5	1.79	11.3	1.97	12.9	2.36	13.6	2.57
	23	7.5	1.33	8.3	1.45	9.0	1.58	9.8	1.75	10.5	1.93	11.3	2.13	12.9	2.55	13.6	2.77
	25	7.5	1.39	8.3	1.52	9.0	1.69	9.8	1.88	10.5	2.08	11.3	2.29	12.9	2.74	13.6	2.98
	27	7.5	1.45	8.3	1.62	9.0	1.82	9.8	2.02	10.5	2.23	11.3	2.45	12.9	2.94	13.6	3.20
	30	7.5	1.60	8.3	1.80	9.0	2.02	9.8	2.24	10.5	2.48	11.3	2.73	12.9	3.27	13.6	3.56
	33	7.5	1.77	8.3	1.99	9.0	2.23	9.8	2.48	10.5	2.75	11.3	3.03	12.9	3.63	13.6	3.96
	35	7.5	1.89	8.3	2.13	9.0	2.39	9.8	2.66	10.5	2.94	11.3	3.24	12.9	3.89	13.6	4.26
	37	7.5	2.02	8.3	2.28	9.0	2.55	9.8	2.84	10.5	3.15	11.3	3.47	12.9	4.20	13.3	4.34
	40	7.5	2.23	8.3	2.52	9.0	2.82	9.8	3.15	10.5	3.50	11.0	3.65	11.3	3.63	11.5	3.63
	43	7.5	2.47	8.3	2.79	9.0	3.14	9.8	3.51	10.2	3.68	10.4	3.68	10.7	3.66	10.9	3.65
	46	7.5	2.74	8.3	3.11	9.0	3.50	9.5	3.72	9.7	3.71	9.8	3.70	10.1	3.69	10.3	3.68
9.0 (60%)	10	6.4	1.08	7.1	1.18	7.7	1.28	8.4	1.37	9.0	1.47	9.7	1.57	11.0	1.77	11.7	1.87
	15	6.4	1.08	7.1	1.18	7.7	1.28	8.4	1.37	9.0	1.47	9.7	1.57	11.0	1.77	11.7	1.87
	21	6.4	1.10	7.1	1.20	7.7	1.31	8.4	1.41	9.0	1.51	9.7	1.61	11.0	1.90	11.7	2.06
	23	6.4	1.15	7.1	1.26	7.7	1.37	8.4	1.47	9.0	1.58	9.7	1.73	11.0	2.05	11.7	2.22
	25	6.4	1.21	7.1	1.32	7.7	1.43	8.4	1.54	9.0	1.70	9.7	1.86	11.0	2.20	11.7	2.38
	27	6.4	1.26	7.1	1.38	7.7	1.50	8.4	1.66	9.0	1.82	9.7	1.99	11.0	2.36	11.7	2.56
	30	6.4	1.34	7.1	1.49	7.7	1.66	8.4	1.84	9.0	2.02	9.7	2.21	11.0	2.62	11.7	2.85
	33	6.4	1.48	7.1	1.65	7.7	1.84	8.4	2.03	9.0	2.24	9.7	2.45	11.0	2.91	11.7	3.16
	35	6.4	1.58	7.1	1.77	7.7	1.97	8.4	2.18	9.0	2.39	9.7	2.62	11.0	3.12	11.7	3.38
	37	6.4	1.68	7.1	1.89	7.7	2.10	8.4	2.32	9.0	2.56	9.7	2.81	11.0	3.34	11.7	3.63
	40	6.4	1.85	7.1	2.08	7.7	2.32	8.4	2.57	9.0	2.83	9.7	3.11	10.9	3.64	11.1	3.64
	43	6.4	2.04	7.1	2.30	7.7	2.57	8.4	2.85	9.0	3.15	9.7	3.47	10.3	3.67	10.5	3.66
	46	6.4	2.26	7.1	2.55	7.7	2.85	8.4	3.17	9.0	3.51	9.5	3.71	9.8	3.70	9.9	3.69
7.6 (50%)	10	5.4	0.92	5.9	1.00	6.5	1.08	7.0	1.16	7.6	1.25	8.1	1.33	9.2	1.49	9.7	1.57
	15	5.4	0.92	5.9	1.00	6.5	1.08	7.0	1.16	7.6	1.25	8.1	1.33	9.2	1.49	9.7	1.57
	21	5.4	0.94	5.9	1.02	6.5	1.11	7.0	1.19	7.5	1.28	8.1	1.36	9.2	1.53	9.7	1.61
	23	5.4	0.98	5.9	1.07	6.5	1.16	7.0	1.25	7.6	1.33	8.1	1.42	9.2	1.61	9.7	1.73
	25	5.4	1.02	5.9	1.12	6.5	1.21	7.0	1.30	7.6	1.40	8.1	1.49	9.2	1.73	9.7	1.86
	27	5.4	1.07	5.9	1.17	6.5	1.26	7.0	1.36	7.6	1.46	8.1	1.58	9.2	1.85	9.7	2.00
	30	5.4	1.14	5.9	1.24	6.5	1.35	7.0	1.47	7.6	1.61	8.1	1.75	9.2	2.06	9.7	2.22
	33	5.4	1.21	5.9	1.34	6.5	1.48	7.0	1.63	7.6	1.78	8.1	1.94	9.2	2.28	9.7	2.46
	35	5.4	1.28	5.9	1.43	6.5	1.58	7.0	1.74	7.6	1.90	8.1	2.08	9.2	2.44	9.7	2.63
	37	5.4	1.37	5.9	1.52	6.5	1.69	7.0	1.86	7.6	2.03	8.1	2.22	9.2	2.61	9.7	2.81
	40	5.4	1.50	5.9	1.68	6.5	1.86	7.0	2.05	7.6	2.24	8.1	2.45	9.2	2.89	9.7	3.12
	43	5.4	1.65	5.9	1.84	6.5	2.05	7.0	2.26	7.6	2.48	8.1	2.72	9.2	3.21	9.7	3.48
	46	5.4	1.82	5.9	2.04	6.5	2.27	7.0	2.51	7.6	2.76	8.1	3.02	9.2	3.58	9.5	3.70

5. Heating capacity table (Outdoor unit)

- TC: Total capacity (kW)
- IP: Input power of compressor and outdoor fan motor (kW)
- The data is based on the following conditions:
  - Pipe length: 7.5 m
  - Height difference: 0 m

5-1. Stand-alone

■ Model: AJ∗040LCLDH

Heating capacity at rated condition: 12.1 kW (4 HP)																
Total rated capacity of indoor unit	Outdoor temperature		Indoor temperature													
			16°CDB		18°CDB		20°CDB		21°CDB		22°CDB		24°CDB		26°CDB	
	°CDB	°CWB	TC	IP	TC	IP	TC	IP	TC	IP	TC	IP	TC	IP	TC	IP
15.7 (130%)	-20.0	-20.7	9.0	2.18	8.9	2.25	8.8	2.32	8.7	2.35	8.7	2.39	8.5	2.46	8.4	2.53
	-15.0	-16.0	9.9	2.41	9.8	2.49	9.7	2.56	9.7	2.60	9.6	2.64	9.5	2.71	9.4	2.79
	-12.0	-13.0	10.6	2.56	10.5	2.64	10.4	2.72	10.4	2.76	10.3	2.80	10.2	2.87	10.1	2.95
	-9.0	-10.0	11.4	2.71	11.3	2.79	11.2	2.87	11.1	2.91	11.1	2.95	11.0	3.04	10.8	3.12
	-7.0	-8.0	11.9	2.81	11.8	2.89	11.7	2.98	11.7	3.02	11.6	3.06	11.5	3.15	11.4	3.23
	-5.0	-6.0	12.5	2.91	12.4	3.00	12.3	3.08	12.2	3.13	12.2	3.17	12.1	3.26	11.9	3.35
	-3.0	-4.0	13.1	3.01	13.0	3.10	12.9	3.19	12.8	3.24	12.8	3.28	12.6	3.37	12.1	3.30
	-1.0	-2.0	13.7	3.12	13.6	3.21	13.5	3.30	13.4	3.35	13.4	3.39	13.2	3.45	12.1	3.16
	0.0	-1.0	14.1	3.17	13.9	3.27	13.8	3.36	13.7	3.40	13.7	3.45	13.2	3.38	12.1	3.10
	2.0	1.0	14.7	3.28	14.6	3.38	14.4	3.47	14.4	3.52	14.2	3.51	13.2	3.23	12.1	2.97
	5.0	4.0	15.7	3.45	15.6	3.55	15.2	3.55	14.7	3.42	14.2	3.29	13.2	3.03	12.1	2.78
	7.0	6.0	16.4	3.57	16.2	3.65	15.2	3.40	14.7	3.27	14.2	3.15	13.2	2.90	12.1	2.66
	9.0	7.8	17.0	3.67	16.2	3.51	15.2	3.26	14.7	3.14	14.2	3.02	13.2	2.79	12.1	2.56
	12.0	10.6	17.2	3.53	16.2	3.30	15.2	3.07	14.7	2.95	14.2	2.84	13.2	2.62	12.1	2.40
	15.0	13.5	17.2	3.31	16.2	3.09	15.2	2.88	14.7	2.77	14.2	2.66	13.2	2.46	12.1	2.25
14.5 (120%)	-20.0	-20.7	8.9	2.23	8.8	2.30	8.7	2.37	8.6	2.40	8.6	2.44	8.5	2.51	8.3	2.58
	-15.0	-16.0	9.8	2.47	9.7	2.55	9.6	2.62	9.6	2.66	9.5	2.70	9.4	2.77	9.3	2.85
	-12.0	-13.0	10.5	2.63	10.4	2.71	10.3	2.78	10.3	2.82	10.2	2.86	10.1	2.94	10.0	3.02
	-9.0	-10.0	11.3	2.79	11.2	2.87	11.1	2.95	11.0	2.99	11.0	3.03	10.9	3.11	10.7	3.19
	-7.0	-8.0	11.8	2.89	11.7	2.97	11.6	3.06	11.6	3.10	11.5	3.14	11.4	3.23	11.2	3.28
	-5.0	-6.0	12.4	3.00	12.3	3.09	12.2	3.17	12.1	3.21	12.1	3.26	11.9	3.34	11.2	3.15
	-3.0	-4.0	13.0	3.11	12.9	3.20	12.8	3.29	12.7	3.33	12.6	3.37	12.1	3.30	11.2	3.03
	-1.0	-2.0	13.6	3.22	13.5	3.31	13.4	3.40	13.3	3.45	13.1	3.43	12.1	3.16	11.2	2.90
	0.0	-1.0	13.9	3.28	13.8	3.37	13.7	3.46	13.5	3.48	13.1	3.35	12.1	3.10	11.2	2.84
	2.0	1.0	14.6	3.40	14.4	3.49	14.0	3.46	13.5	3.34	13.1	3.21	12.1	2.97	11.2	2.72
	5.0	4.0	15.5	3.58	14.9	3.49	14.0	3.25	13.5	3.13	13.1	3.01	12.1	2.78	11.2	2.55
	7.0	6.0	15.9	3.57	14.9	3.34	14.0	3.11	13.5	2.99	13.1	2.88	12.1	2.66	11.2	2.44
	9.0	7.8	15.9	3.43	14.9	3.21	14.0	2.99	13.5	2.88	13.1	2.77	12.1	2.56	11.2	2.35
	12.0	10.6	15.9	3.23	14.9	3.01	14.0	2.81	13.5	2.70	13.1	2.60	12.1	2.40	11.2	2.20
	15.0	13.5	15.9	3.02	14.9	2.83	14.0	2.63	13.5	2.54	13.1	2.44	12.1	2.25	11.2	2.07
13.3 (110%)	-20.0	-20.7	8.8	2.29	8.7	2.36	8.6	2.43	8.5	2.46	8.5	2.50	8.4	2.57	8.3	2.64
	-15.0	-16.0	9.7	2.54	9.6	2.62	9.5	2.69	9.5	2.73	9.4	2.77	9.3	2.84	9.2	2.92
	-12.0	-13.0	10.4	2.71	10.3	2.78	10.2	2.86	10.1	2.90	10.1	2.94	10.0	3.02	9.9	3.10
	-9.0	-10.0	11.2	2.87	11.1	2.95	11.0	3.03	10.9	3.07	10.8	3.12	10.7	3.20	10.3	3.11
	-7.0	-8.0	11.7	2.99	11.6	3.07	11.5	3.15	11.4	3.19	11.4	3.24	11.1	3.26	10.3	3.00
	-5.0	-6.0	12.3	3.10	12.2	3.19	12.0	3.27	12.0	3.31	11.9	3.36	11.1	3.13	10.3	2.88
	-3.0	-4.0	12.8	3.22	12.7	3.31	12.6	3.39	12.4	3.38	12.0	3.25	11.1	3.01	10.3	2.76
	-1.0	-2.0	13.4	3.34	13.3	3.43	12.8	3.36	12.4	3.24	12.0	3.12	11.1	2.88	10.3	2.65
	0.0	-1.0	13.7	3.40	13.6	3.49	12.8	3.29	12.4	3.17	12.0	3.05	11.1	2.82	10.3	2.59
	2.0	1.0	14.4	3.53	13.7	3.38	12.8	3.15	12.4	3.04	12.0	2.93	11.1	2.70	10.3	2.48
	5.0	4.0	14.6	3.39	13.7	3.17	12.8	2.95	12.4	2.85	12.0	2.74	11.1	2.53	10.3	2.33
	7.0	6.0	14.6	3.24	13.7	3.03	12.8	2.83	12.4	2.72	12.0	2.62	11.1	2.42	10.3	2.23
	9.0	7.8	14.6	3.12	13.7	2.91	12.8	2.72	12.4	2.62	12.0	2.52	11.1	2.33	10.3	2.14
	12.0	10.6	14.6	2.93	13.7	2.74	12.8	2.55	12.4	2.46	12.0	2.37	11.1	2.19	10.3	2.01
	15.0	13.5	14.6	2.74	13.7	2.57	12.8	2.39	12.4	2.31	12.0	2.22	11.1	2.05	10.3	1.89
12.1 (100%)	-20.0	-20.7	9.0	2.36	8.9	2.43	8.8	2.50	8.7	2.53	8.7	2.57	8.6	2.64	8.4	2.71
	-15.0	-16.0	10.0	2.63	9.9	2.70	9.7	2.77	9.7	2.81	9.6	2.85	9.5	2.92	9.4	3.00
	-12.0	-13.0	10.7	2.80	10.6	2.88	10.4	2.95	10.4	2.99	10.3	3.03	10.2	3.11	9.7	2.98
	-9.0	-10.0	11.4	2.98	11.3	3.06	11.2	3.14	11.2	3.18	11.1	3.22	10.5	3.06	9.7	2.82
	-7.0	-8.0	12.0	3.10	11.9	3.18	11.7	3.26	11.7	3.30	11.3	3.19	10.5	2.95	9.7	2.71
	-5.0	-6.0	12.5	3.22	12.4	3.31	12.1	3.29	11.7	3.18	11.3	3.06	10.5	2.83	9.7	2.61
	-3.0	-4.0	13.1	3.35	12.9	3.39	12.1	3.16	11.7	3.05	11.3	2.94	10.5	2.72	9.7	2.50
	-1.0	-2.0	13.7	3.47	12.9	3.25	12.1	3.03	11.7	2.93	11.3	2.82	10.5	2.61	9.7	2.40
	0.0	-1.0	13.7	3.40	12.9	3.18	12.1	2.97	11.7	2.86	11.3	2.76	10.5	2.55	9.7	2.35
	2.0	1.0	13.7	3.26	12.9	3.05	12.1	2.84	11.7	2.74	11.3	2.64	10.5	2.44	9.7	2.25
	5.0	4.0	13.7	3.05	12.9	2.86	12.1	2.66	11.7	2.57	11.3	2.48	10.5	2.29	9.7	2.11
	7.0	6.0	13.7	2.92	12.9	2.73	12.1	2.55	11.7	2.46	11.3	2.37	10.5	2.19	9.7	2.02
	9.0	7.8	13.7	2.81	12.9	2.63	12.1	2.45	11.7	2.36	11.3	2.28	10.5	2.11	9.7	1.94
	12.0	10.6	13.7	2.64	12.9	2.47	12.1	2.30	11.7	2.22	11.3	2.14	10.5	1.98	9.7	1.82
	15.0	13.5	13.7	2.47	12.9	2.31	12.1	2.16	11.7	2.08	11.3	2.01	10.5	1.86	9.7	1.71

Heating capacity at rated condition: 12.1 kW (4 HP)																
Total rated capacity of indoor unit	Outdoor temperature		Indoor temperature													
			16°CDB		18°CDB		20°CDB		21°CDB		22°CDB		24°CDB		26°CDB	
	°CDB	°CWB	TC	IP	TC	IP	TC	IP	TC	IP	TC	IP	TC	IP	TC	IP
10.8 (90%)	-20.0	-20.7	8.9	2.44	8.8	2.51	8.6	2.58	8.6	2.62	8.5	2.65	8.4	2.72	8.3	2.79
	-15.0	-16.0	9.8	2.73	9.7	2.80	9.6	2.87	9.5	2.91	9.5	2.94	9.4	3.02	8.7	2.81
	-12.0	-13.0	10.5	2.91	10.4	2.99	10.3	3.06	10.2	3.10	10.2	3.13	9.4	2.90	8.7	2.68
	-9.0	-10.0	11.3	3.10	11.1	3.18	10.8	3.19	10.5	3.08	10.2	2.97	9.4	2.75	8.7	2.53
	-7.0	-8.0	11.8	3.23	11.6	3.28	10.8	3.07	10.5	2.96	10.2	2.85	9.4	2.64	8.7	2.43
	-5.0	-6.0	12.3	3.36	11.6	3.15	10.8	2.95	10.5	2.84	10.2	2.74	9.4	2.54	8.7	2.34
	-3.0	-4.0	12.3	3.23	11.6	3.03	10.8	2.83	10.5	2.73	10.2	2.63	9.4	2.44	8.7	2.24
	-1.0	-2.0	12.3	3.10	11.6	2.90	10.8	2.71	10.5	2.62	10.2	2.52	9.4	2.34	8.7	2.15
	0.0	-1.0	12.3	3.03	11.6	2.84	10.8	2.66	10.5	2.56	10.2	2.47	9.4	2.29	8.7	2.10
	2.0	1.0	12.3	2.91	11.6	2.72	10.8	2.54	10.5	2.45	10.2	2.37	9.4	2.19	8.7	2.02
	5.0	4.0	12.3	2.72	11.6	2.55	10.8	2.38	10.5	2.30	10.2	2.22	9.4	2.05	8.7	1.89
	7.0	6.0	12.3	2.60	11.6	2.44	10.8	2.28	10.5	2.20	10.2	2.12	9.4	1.96	8.7	1.81
	9.0	7.8	12.3	2.50	11.6	2.35	10.8	2.19	10.5	2.11	10.2	2.04	9.4	1.89	8.7	1.74
	12.0	10.6	12.3	2.35	11.6	2.20	10.8	2.06	10.5	1.99	10.2	1.92	9.4	1.77	8.7	1.63
	15.0	13.5	12.3	2.21	11.6	2.07	10.8	1.93	10.5	1.86	10.2	1.80	9.4	1.66	8.7	1.53
9.6 (80%)	-20.0	-20.7	8.7	2.55	8.6	2.61	8.5	2.68	8.4	2.71	8.4	2.75	8.3	2.82	7.7	2.67
	-15.0	-16.0	9.6	2.85	9.5	2.92	9.4	2.99	9.4	3.03	9.0	2.92	8.4	2.71	7.7	2.50
	-12.0	-13.0	10.3	3.05	10.2	3.12	9.6	2.98	9.4	2.88	9.0	2.78	8.4	2.57	7.7	2.37
	-9.0	-10.0	11.0	3.21	10.3	3.02	9.6	2.82	9.4	2.72	9.0	2.63	8.4	2.44	7.7	2.25
	-7.0	-8.0	11.0	3.09	10.3	2.90	9.6	2.71	9.4	2.62	9.0	2.53	8.4	2.34	7.7	2.16
	-5.0	-6.0	11.0	2.97	10.3	2.79	9.6	2.61	9.4	2.52	9.0	2.43	8.4	2.25	7.7	2.07
	-3.0	-4.0	11.0	2.85	10.3	2.67	9.6	2.50	9.4	2.41	9.0	2.33	8.4	2.16	7.7	1.99
	-1.0	-2.0	11.0	2.73	10.3	2.56	9.6	2.40	9.4	2.31	9.0	2.23	8.4	2.07	7.7	1.91
	0.0	-1.0	11.0	2.68	10.3	2.51	9.6	2.35	9.4	2.27	9.0	2.19	8.4	2.03	7.7	1.87
	2.0	1.0	11.0	2.56	10.3	2.41	9.6	2.25	9.4	2.17	9.0	2.09	8.4	1.94	7.7	1.79
	5.0	4.0	11.0	2.40	10.3	2.25	9.6	2.11	9.4	2.03	9.0	1.96	8.4	1.82	7.7	1.68
	7.0	6.0	11.0	2.30	10.3	2.16	9.6	2.02	9.4	1.95	9.0	1.88	8.4	1.74	7.7	1.60
	9.0	7.8	11.0	2.21	10.3	2.07	9.6	1.94	9.4	1.87	9.0	1.80	8.4	1.67	7.7	1.54
	12.0	10.6	11.0	2.08	10.3	1.95	9.6	1.82	9.4	1.76	9.0	1.70	8.4	1.57	7.7	1.45
	15.0	13.5	11.0	1.95	10.3	1.83	9.6	1.71	9.4	1.65	9.0	1.59	8.4	1.47	7.7	1.36
8.4 (70%)	-20.0	-20.7	8.5	2.67	8.4	2.74	8.3	2.80	8.2	2.82	7.9	2.72	7.3	2.53	6.8	2.34
	-15.0	-16.0	9.4	3.00	9.0	2.92	8.4	2.73	8.2	2.64	7.9	2.55	7.3	2.37	6.8	2.19
	-12.0	-13.0	9.6	2.95	9.0	2.78	8.4	2.60	8.2	2.51	7.9	2.42	7.3	2.25	6.8	2.08
	-9.0	-10.0	9.6	2.80	9.0	2.63	8.4	2.46	8.2	2.38	7.9	2.29	7.3	2.13	6.8	1.96
	-7.0	-8.0	9.6	2.69	9.0	2.53	8.4	2.36	8.2	2.28	7.9	2.20	7.3	2.05	6.8	1.89
	-5.0	-6.0	9.6	2.58	9.0	2.43	8.4	2.27	8.2	2.19	7.9	2.12	7.3	1.96	6.8	1.81
	-3.0	-4.0	9.6	2.48	9.0	2.33	8.4	2.18	8.2	2.10	7.9	2.03	7.3	1.88	6.8	1.74
	-1.0	-2.0	9.6	2.38	9.0	2.23	8.4	2.09	8.2	2.02	7.9	1.95	7.3	1.81	6.8	1.67
	0.0	-1.0	9.6	2.33	9.0	2.19	8.4	2.04	8.2	1.98	7.9	1.91	7.3	1.77	6.8	1.63
	2.0	1.0	9.6	2.23	9.0	2.09	8.4	1.96	8.2	1.89	7.9	1.83	7.3	1.69	6.8	1.56
	5.0	4.0	9.6	2.09	9.0	1.96	8.4	1.84	8.2	1.77	7.9	1.71	7.3	1.59	6.8	1.47
	7.0	6.0	9.6	2.00	9.0	1.88	8.4	1.76	8.2	1.70	7.9	1.64	7.3	1.52	6.8	1.40
	9.0	7.8	9.6	1.92	9.0	1.80	8.4	1.69	8.2	1.63	7.9	1.57	7.3	1.46	6.8	1.35
	12.0	10.6	9.6	1.80	9.0	1.70	8.4	1.59	8.2	1.53	7.9	1.48	7.3	1.37	6.8	1.27
	15.0	13.5	9.6	1.69	9.0	1.59	8.4	1.49	8.2	1.44	7.9	1.39	7.3	1.29	6.8	1.19
7.2 (60%)	-20.0	-20.7	8.2	2.83	7.7	2.67	7.2	2.50	7.0	2.42	6.8	2.34	6.3	2.17	5.8	2.01
	-15.0	-16.0	8.2	2.66	7.7	2.50	7.2	2.34	7.0	2.26	6.8	2.19	6.3	2.03	5.8	1.88
	-12.0	-13.0	8.2	2.52	7.7	2.37	7.2	2.23	7.0	2.15	6.8	2.08	6.3	1.93	5.8	1.78
	-9.0	-10.0	8.2	2.39	7.7	2.25	7.2	2.10	7.0	2.03	6.8	1.96	6.3	1.82	5.8	1.69
	-7.0	-8.0	8.2	2.30	7.7	2.16	7.2	2.02	7.0	1.96	6.8	1.89	6.3	1.75	5.8	1.62
	-5.0	-6.0	8.2	2.21	7.7	2.07	7.2	1.94	7.0	1.88	6.8	1.81	6.3	1.68	5.8	1.56
	-3.0	-4.0	8.2	2.12	7.7	1.99	7.2	1.86	7.0	1.80	6.8	1.74	6.3	1.62	5.8	1.49
	-1.0	-2.0	8.2	2.03	7.7	1.91	7.2	1.79	7.0	1.73	6.8	1.67	6.3	1.55	5.8	1.43
	0.0	-1.0	8.2	1.99	7.7	1.87	7.2	1.75	7.0	1.69	6.8	1.63	6.3	1.52	5.8	1.40
	2.0	1.0	8.2	1.90	7.7	1.79	7.2	1.68	7.0	1.62	6.8	1.56	6.3	1.45	5.8	1.34
	5.0	4.0	8.2	1.78	7.7	1.68	7.2	1.57	7.0	1.52	6.8	1.47	6.3	1.36	5.8	1.26
	7.0	6.0	8.2	1.71	7.7	1.60	7.2	1.50	7.0	1.45	6.8	1.40	6.3	1.30	5.8	1.21
	9.0	7.8	8.2	1.64	7.7	1.54	7.2	1.45	7.0	1.40	6.8	1.35	6.3	1.25	5.8	1.16
	12.0	10.6	8.2	1.54	7.7	1.45	7.2	1.36	7.0	1.31	6.8	1.27	6.3	1.18	5.8	1.09
	15.0	13.5	8.2	1.45	7.7	1.36	7.2	1.28	7.0	1.23	6.8	1.19	6.3	1.11	5.8	1.03
6.1 (50%)	-20.0	-20.7	6.9	2.37	6.5	2.23	6.1	2.09	5.8	2.02	5.6	1.96	5.2	1.82	4.8	1.68
	-15.0	-16.0	6.9	2.21	6.5	2.08	6.1	1.95	5.8	1.89	5.6	1.83	5.2	1.70	4.8	1.57
	-12.0	-13.0	6.9	2.10	6.5	1.98	6.1	1.86	5.8	1.80	5.6	1.73	5.2	1.61	4.8	1.49
	-9.0	-10.0	6.9	1.99	6.5	1.87	6.1	1.75	5.8	1.70	5.6	1.64	5.2	1.53	4.8	1.41
	-7.0	-8.0	6.9	1.91	6.5	1.80	6.1	1.69	5.8	1.63	5.6	1.58	5.2	1.47	4.8	1.36
	-5.0	-6.0	6.9	1.83	6.5	1.73	6.1	1.62	5.8	1.57	5.6	1.51	5.2	1.41	4.8	1.30
	-3.0	-4.0	6.9	1.76	6.5	1.66	6.1	1.55	5.8	1.50	5.6	1.45	5.2	1.35	4.8	1.25
	-1.0	-2.0	6.9	1.69	6.5	1.59	6.1	1.49	5.8	1.44	5.6	1.39	5.2	1.30	4.8	1.20
	0.0	-1.0	6.9	1.65	6.5	1.56	6.1	1.46	5.8	1.41	5.6	1.36	5.2	1.27	4.8	1.18
	2.0	1.0	6.9	1.58	6.5	1.49	6.1	1.40	5.8	1.35	5.6	1.31	5.2	1.22	4.8	1.13
	5.0	4.0	6.9	1.48	6.5	1.40	6.1	1.31	5.8	1.27	5.6	1.23	5.2	1.14	4.8	1.06
	7.0	6.0	6.9	1.42	6.5	1.34	6.1	1.26	5.8	1.21	5.6	1.17	5.2	1.09	4.8	1.01
	9.0	7.8	6.9	1.37	6.5	1.29	6.1	1.21	5.8	1.17	5.6	1.13	5.2	1.05	4.8	0.98
	12.0	10.6	6.9	1.28	6.5	1.21	6.1	1.14	5.8	1.10	5.6	1.06	5.2	0.99	4.8	0.92
	15.0	13.5	6.9	1.21	6.5	1.14	6.1	1.07	5.8	1.03	5.6	1.00	5.2	0.93	4.8	0.86

MODEL SELECTION

■ Model: AJ∗045LCLDH

Heating capacity at rated condition: 14.0 kW (5 HP)																
Total rated capacity of indoor unit	Outdoor temperature		Indoor temperature													
			16°CDB		18°CDB		20°CDB		21°CDB		22°CDB		24°CDB		26°CDB	
	°CDB	°CWB	TC	IP	TC	IP	TC	IP	TC	IP	TC	IP	TC	IP	TC	IP
18.2 (130%)	-20.0	-20.7	10.7	2.83	10.5	2.92	10.4	3.01	10.3	3.05	10.2	3.09	10.1	3.18	9.9	3.27
	-15.0	-16.0	11.7	3.12	11.6	3.21	11.5	3.30	11.4	3.35	11.3	3.40	11.2	3.49	11.1	3.58
	-12.0	-13.0	12.6	3.30	12.4	3.40	12.3	3.49	12.2	3.54	12.2	3.59	12.0	3.68	11.9	3.78
	-9.0	-10.0	13.5	3.49	13.4	3.59	13.2	3.68	13.2	3.73	13.1	3.78	13.0	3.88	12.8	3.98
	-7.0	-8.0	14.1	3.61	14.0	3.71	13.9	3.81	13.8	3.86	13.7	3.92	13.6	4.02	13.5	4.12
	-5.0	-6.0	14.8	3.74	14.7	3.84	14.5	3.94	14.5	4.00	14.4	4.05	14.3	4.15	14.1	4.22
	-3.0	-4.0	15.5	3.86	15.4	3.97	15.2	4.08	15.2	4.13	15.1	4.19	15.0	4.29	14.1	4.05
	-1.0	-2.0	16.3	3.99	16.1	4.10	16.0	4.21	15.9	4.27	15.8	4.32	15.2	4.23	14.1	3.88
	0.0	-1.0	16.6	4.06	16.5	4.17	16.3	4.28	16.3	4.34	16.2	4.39	15.2	4.14	14.1	3.79
	2.0	1.0	17.4	4.19	17.2	4.31	17.1	4.42	17.0	4.46	16.4	4.29	15.2	3.96	14.1	3.63
	5.0	4.0	18.6	4.40	18.4	4.52	17.6	4.34	17.0	4.18	16.4	4.02	15.2	3.70	14.1	3.39
	7.0	6.0	19.4	4.55	18.7	4.46	17.6	4.15	17.0	3.99	16.4	3.84	15.2	3.54	14.1	3.24
	9.0	7.8	19.9	4.59	18.7	4.28	17.6	3.98	17.0	3.84	16.4	3.69	15.2	3.40	14.1	3.12
	12.0	10.6	19.9	4.31	18.7	4.02	17.6	3.74	17.0	3.60	16.4	3.46	15.2	3.19	14.1	2.92
	15.0	13.5	19.9	4.03	18.7	3.76	17.6	3.50	17.0	3.37	16.4	3.24	15.2	2.99	14.1	2.74
16.8 (120%)	-20.0	-20.7	10.5	2.90	10.4	2.98	10.3	3.07	10.2	3.11	10.1	3.15	10.0	3.24	9.8	3.33
	-15.0	-16.0	11.6	3.20	11.5	3.29	11.4	3.38	11.3	3.42	11.2	3.47	11.1	3.56	11.0	3.65
	-12.0	-13.0	12.5	3.39	12.3	3.48	12.2	3.58	12.1	3.62	12.1	3.67	11.9	3.77	11.8	3.86
	-9.0	-10.0	13.4	3.58	13.2	3.68	13.1	3.78	13.0	3.83	13.0	3.88	12.8	3.97	12.7	4.07
	-7.0	-8.0	14.0	3.71	13.9	3.81	13.7	3.91	13.7	3.96	13.6	4.01	13.5	4.12	13.0	4.04
	-5.0	-6.0	14.7	3.84	14.5	3.95	14.4	4.05	14.3	4.10	14.3	4.16	14.1	4.22	13.0	3.88
	-3.0	-4.0	15.4	3.98	15.2	4.09	15.1	4.19	15.0	4.25	15.0	4.30	14.1	4.05	13.0	3.72
	-1.0	-2.0	16.1	4.12	16.0	4.23	15.8	4.34	15.7	4.37	15.1	4.20	14.1	3.88	13.0	3.56
	0.0	-1.0	16.5	4.19	16.3	4.30	16.2	4.41	15.7	4.27	15.1	4.11	14.1	3.79	13.0	3.48
	2.0	1.0	17.2	4.33	17.1	4.45	16.2	4.24	15.7	4.09	15.1	3.93	14.1	3.63	13.0	3.33
	5.0	4.0	18.4	4.56	17.3	4.26	16.2	3.97	15.7	3.82	15.1	3.68	14.1	3.39	13.0	3.11
	7.0	6.0	18.4	4.36	17.3	4.08	16.2	3.79	15.7	3.66	15.1	3.52	14.1	3.24	13.0	2.98
	9.0	7.8	18.4	4.19	17.3	3.91	16.2	3.64	15.7	3.51	15.1	3.38	14.1	3.12	13.0	2.86
	12.0	10.6	18.4	3.93	17.3	3.67	16.2	3.42	15.7	3.29	15.1	3.17	14.1	2.92	13.0	2.68
	15.0	13.5	18.4	3.68	17.3	3.44	16.2	3.20	15.7	3.08	15.1	2.97	14.1	2.74	13.0	2.51
15.4 (110%)	-20.0	-20.7	10.4	2.97	10.3	3.06	10.1	3.14	10.1	3.18	10.0	3.23	9.9	3.31	9.7	3.40
	-15.0	-16.0	11.5	3.29	11.4	3.37	11.2	3.46	11.2	3.51	11.1	3.55	11.0	3.64	10.9	3.74
	-12.0	-13.0	12.3	3.49	12.2	3.58	12.1	3.67	12.0	3.72	11.9	3.77	11.8	3.86	11.7	3.95
	-9.0	-10.0	13.2	3.69	13.1	3.79	13.0	3.88	12.9	3.93	12.8	3.98	12.7	4.08	11.9	3.84
	-7.0	-8.0	13.8	3.83	13.7	3.93	13.6	4.03	13.5	4.08	13.4	4.13	12.9	4.01	11.9	3.69
	-5.0	-6.0	14.5	3.97	14.4	4.07	14.2	4.18	14.2	4.23	13.9	4.17	12.9	3.85	11.9	3.54
	-3.0	-4.0	15.2	4.12	15.1	4.22	14.9	4.30	14.4	4.15	13.9	3.99	12.9	3.69	11.9	3.39
	-1.0	-2.0	15.9	4.27	15.8	4.37	14.9	4.12	14.4	3.97	13.9	3.82	12.9	3.53	11.9	3.24
	0.0	-1.0	16.3	4.34	15.9	4.33	14.9	4.03	14.4	3.89	13.9	3.74	12.9	3.46	11.9	3.17
	2.0	1.0	16.8	4.43	15.9	4.14	14.9	3.86	14.4	3.72	13.9	3.58	12.9	3.31	11.9	3.04
	5.0	4.0	16.8	4.14	15.9	3.87	14.9	3.61	14.4	3.48	13.9	3.35	12.9	3.09	11.9	2.84
	7.0	6.0	16.8	3.96	15.9	3.70	14.9	3.45	14.4	3.32	13.9	3.20	12.9	2.95	11.9	2.71
	9.0	7.8	16.8	3.80	15.9	3.55	14.9	3.31	14.4	3.19	13.9	3.07	12.9	2.84	11.9	2.61
	12.0	10.6	16.8	3.57	15.9	3.34	14.9	3.11	14.4	3.00	13.9	2.88	12.9	2.66	11.9	2.45
	15.0	13.5	16.8	3.34	15.9	3.12	14.9	2.91	14.4	2.80	13.9	2.70	12.9	2.49	11.9	2.29
14.0 (100%)	-20.0	-20.7	10.7	3.06	10.5	3.14	10.4	3.23	10.3	3.27	10.2	3.31	10.1	3.40	9.9	3.48
	-15.0	-16.0	11.8	3.39	11.6	3.48	11.5	3.57	11.4	3.61	11.4	3.65	11.2	3.74	11.1	3.83
	-12.0	-13.0	12.6	3.60	12.5	3.69	12.3	3.79	12.3	3.83	12.2	3.88	12.1	3.97	11.2	3.68
	-9.0	-10.0	13.5	3.82	13.4	3.91	13.2	4.01	13.2	4.06	13.1	4.08	12.1	3.78	11.2	3.48
	-7.0	-8.0	14.2	3.97	14.0	4.07	13.9	4.16	13.5	4.07	13.1	3.92	12.1	3.63	11.2	3.34
	-5.0	-6.0	14.8	4.12	14.7	4.22	14.0	4.05	13.5	3.91	13.1	3.76	12.1	3.48	11.2	3.20
	-3.0	-4.0	15.5	4.28	14.9	4.16	14.0	3.88	13.5	3.74	13.1	3.61	12.1	3.33	11.2	3.07
	-1.0	-2.0	15.9	4.26	14.9	3.99	14.0	3.72	13.5	3.58	13.1	3.45	12.1	3.19	11.2	2.93
	0.0	-1.0	15.9	4.16	14.9	3.90	14.0	3.64	13.5	3.51	13.1	3.38	12.1	3.12	11.2	2.87
	2.0	1.0	15.9	3.99	14.9	3.73	14.0	3.48	13.5	3.35	13.1	3.23	12.1	2.99	11.2	2.75
	5.0	4.0	15.9	3.73	14.9	3.49	14.0	3.25	13.5	3.14	13.1	3.02	12.1	2.79	11.2	2.57
	7.0	6.0	15.9	3.56	14.9	3.34	14.0	3.11	13.5	3.00	13.1	2.89	12.1	2.67	11.2	2.45
	9.0	7.8	15.9	3.42	14.9	3.20	14.0	2.99	13.5	2.88	13.1	2.77	12.1	2.56	11.2	2.36
	12.0	10.6	15.9	3.21	14.9	3.01	14.0	2.80	13.5	2.70	13.1	2.60	12.1	2.41	11.2	2.21
	15.0	13.5	15.9	3.01	14.9	2.81	14.0	2.62	13.5	2.53	13.1	2.44	12.1	2.25	11.2	2.07
12.6 (90%)	-20.0	-20.7	10.5	3.16	10.3	3.25	10.2	3.33	10.1	3.37	10.1	3.41	9.9	3.50	9.8	3.58
	-15.0	-16.0	11.6	3.51	11.5	3.60	11.3	3.69	11.3	3.73	11.2	3.77	10.9	3.79	10.1	3.49
	-12.0	-13.0	12.4	3.74	12.3	3.83	12.1	3.92	12.1	3.97	11.8	3.87	10.9	3.59	10.1	3.30
	-9.0	-10.0	13.3	3.97	13.2	4.07	12.6	3.93	12.2	3.79	11.8	3.66	10.9	3.39	10.1	3.12
	-7.0	-8.0	13.9	4.13	13.4	4.04	12.6	3.77	12.2	3.64	11.8	3.51	10.9	3.25	10.1	2.99
	-5.0	-6.0	14.3	4.14	13.4	3.88	12.6	3.62	12.2	3.49	11.8	3.37	10.9	3.12	10.1	2.87
	-3.0	-4.0	14.3	3.96	13.4	3.72	12.6	3.47	12.2	3.35	11.8	3.23	10.9	2.99	10.1	2.75
	-1.0	-2.0	14.3	3.80	13.4	3.56	12.6	3.32	12.2	3.20	11.8	3.09	10.9	2.86	10.1	2.63
	0.0	-1.0	14.3	3.71	13.4	3.48	12.6	3.25	12.2	3.13	11.8	3.02	10.9	2.80	10.1	2.57
	2.0	1.0	14.3	3.55	13.4	3.33	12.6	3.11	12.2	3.00	11.8	2.89	10.9	2.67	10.1	2.46
	5.0	4.0	14.3	3.32	13.4	3.11	12.6	2.91	12.2	2.80	11.8	2.70	10.9	2.50	10.1	2.30
	7.0	6.0	14.3	3.18	13.4	2.98	12.6	2.78	12.2	2.68	11.8	2.58	10.9	2.39	10.1	2.20
	9.0	7.8	14.3	3.05	13.4	2.86	12.6	2.67	12.2	2.57	11.8	2.48	10.9	2.30	10.1	2.11
	12.0	10.6	14.3	2.86	13.4	2.68	12.6	2.50	12.2	2.42	11.8	2.33	10.9	2.15	10.1	1.98
	15.0	13.5	14.3	2.68	13.4	2.51	12.6	2.34	12.2	2.26	11.8	2.18	10.9	2.02	10.1	1.86

Heating capacity at rated condition: 14.0 kW (5 HP)																
Total rated capacity of indoor unit	Outdoor temperature		Indoor temperature													
			16°CDB		18°CDB		20°CDB		21°CDB		22°CDB		24°CDB		26°CDB	
	°CDB	°CWB	TC	IP	TC	IP	TC	IP	TC	IP	TC	IP	TC	IP	TC	IP
11.2 (80%)	-20.0	-20.7	10.3	3.29	10.1	3.37	10.0	3.45	9.9	3.49	9.9	3.53	9.7	3.61	9.0	3.33
	-15.0	-16.0	11.4	3.66	11.2	3.74	11.1	3.83	10.8	3.75	10.5	3.62	9.7	3.36	9.0	3.09
	-12.0	-13.0	12.2	3.90	11.9	3.94	11.2	3.68	10.8	3.56	10.5	3.43	9.7	3.18	9.0	2.93
	-9.0	-10.0	12.7	3.96	11.9	3.72	11.2	3.48	10.8	3.36	10.5	3.24	9.7	3.00	9.0	2.76
	-7.0	-8.0	12.7	3.80	11.9	3.57	11.2	3.34	10.8	3.22	10.5	3.11	9.7	2.88	9.0	2.65
	-5.0	-6.0	12.7	3.65	11.9	3.42	11.2	3.20	10.8	3.09	10.5	2.98	9.7	2.76	9.0	2.54
	-3.0	-4.0	12.7	3.50	11.9	3.28	11.2	3.07	10.8	2.96	10.5	2.85	9.7	2.64	9.0	2.43
	-1.0	-2.0	12.7	3.35	11.9	3.14	11.2	2.93	10.8	2.83	10.5	2.73	9.7	2.53	9.0	2.33
	0.0	-1.0	12.7	3.28	11.9	3.07	11.2	2.87	10.8	2.77	10.5	2.67	9.7	2.47	9.0	2.28
	2.0	1.0	12.7	3.13	11.9	2.94	11.2	2.75	10.8	2.65	10.5	2.56	9.7	2.37	9.0	2.18
	5.0	4.0	12.7	2.93	11.9	2.75	11.2	2.57	10.8	2.48	10.5	2.39	9.7	2.21	9.0	2.04
	7.0	6.0	12.7	2.80	11.9	2.63	11.2	2.45	10.8	2.37	10.5	2.28	9.7	2.12	9.0	1.95
	9.0	7.8	12.7	2.69	11.9	2.52	11.2	2.36	10.8	2.27	10.5	2.19	9.7	2.03	9.0	1.87
	12.0	10.6	12.7	2.52	11.9	2.37	11.2	2.21	10.8	2.14	10.5	2.06	9.7	1.91	9.0	1.76
	15.0	13.5	12.7	2.36	11.9	2.22	11.2	2.07	10.8	2.00	10.5	1.93	9.7	1.79	9.0	1.65
9.8 (70%)	-20.0	-20.7	10.0	3.45	9.9	3.53	9.7	3.60	9.5	3.52	9.1	3.40	8.5	3.15	7.8	2.91
	-15.0	-16.0	11.1	3.84	10.5	3.62	9.8	3.39	9.5	3.27	9.1	3.16	8.5	2.93	7.8	2.71
	-12.0	-13.0	11.1	3.65	10.5	3.43	9.8	3.21	9.5	3.10	9.1	2.99	8.5	2.78	7.8	2.56
	-9.0	-10.0	11.1	3.45	10.5	3.24	9.8	3.03	9.5	2.92	9.1	2.82	8.5	2.62	7.8	2.41
	-7.0	-8.0	11.1	3.31	10.5	3.11	9.8	2.91	9.5	2.81	9.1	2.71	8.5	2.51	7.8	2.32
	-5.0	-6.0	11.1	3.17	10.5	2.98	9.8	2.79	9.5	2.69	9.1	2.60	8.5	2.41	7.8	2.22
	-3.0	-4.0	11.1	3.04	10.5	2.85	9.8	2.67	9.5	2.58	9.1	2.49	8.5	2.31	7.8	2.13
	-1.0	-2.0	11.1	2.91	10.5	2.73	9.8	2.55	9.5	2.47	9.1	2.38	8.5	2.21	7.8	2.04
	0.0	-1.0	11.1	2.85	10.5	2.67	9.8	2.50	9.5	2.41	9.1	2.33	8.5	2.16	7.8	1.99
	2.0	1.0	11.1	2.72	10.5	2.56	9.8	2.39	9.5	2.31	9.1	2.23	8.5	2.07	7.8	1.91
	5.0	4.0	11.1	2.54	10.5	2.39	9.8	2.24	9.5	2.16	9.1	2.08	8.5	1.93	7.8	1.78
	7.0	6.0	11.1	2.43	10.5	2.28	9.8	2.14	9.5	2.06	9.1	1.99	8.5	1.85	7.8	1.70
	9.0	7.8	11.1	2.34	10.5	2.19	9.8	2.05	9.5	1.98	9.1	1.91	8.5	1.77	7.8	1.64
	12.0	10.6	11.1	2.19	10.5	2.06	9.8	1.93	9.5	1.86	9.1	1.80	8.5	1.67	7.8	1.54
	15.0	13.5	11.1	2.05	10.5	1.93	9.8	1.81	9.5	1.74	9.1	1.68	8.5	1.56	7.8	1.44
8.4 (60%)	-20.0	-20.7	9.5	3.54	9.0	3.33	8.4	3.12	8.1	3.02	7.8	2.91	7.3	2.71	6.7	2.50
	-15.0	-16.0	9.5	3.29	9.0	3.09	8.4	2.90	8.1	2.80	7.8	2.71	7.3	2.51	6.7	2.32
	-12.0	-13.0	9.5	3.12	9.0	2.93	8.4	2.74	8.1	2.65	7.8	2.56	7.3	2.38	6.7	2.20
	-9.0	-10.0	9.5	2.94	9.0	2.76	8.4	2.59	8.1	2.50	7.8	2.41	7.3	2.24	6.7	2.07
	-7.0	-8.0	9.5	2.82	9.0	2.65	8.4	2.48	8.1	2.40	7.8	2.32	7.3	2.15	6.7	1.99
	-5.0	-6.0	9.5	2.70	9.0	2.54	8.4	2.38	8.1	2.30	7.8	2.22	7.3	2.06	6.7	1.90
	-3.0	-4.0	9.5	2.59	9.0	2.43	8.4	2.28	8.1	2.20	7.8	2.13	7.3	1.97	6.7	1.82
	-1.0	-2.0	9.5	2.48	9.0	2.33	8.4	2.18	8.1	2.11	7.8	2.04	7.3	1.89	6.7	1.75
	0.0	-1.0	9.5	2.43	9.0	2.28	8.4	2.13	8.1	2.06	7.8	1.99	7.3	1.85	6.7	1.71
	2.0	1.0	9.5	2.32	9.0	2.18	8.4	2.04	8.1	1.97	7.8	1.91	7.3	1.77	6.7	1.63
	5.0	4.0	9.5	2.17	9.0	2.04	8.4	1.91	8.1	1.85	7.8	1.78	7.3	1.66	6.7	1.53
	7.0	6.0	9.5	2.07	9.0	1.95	8.4	1.83	8.1	1.77	7.8	1.70	7.3	1.58	6.7	1.46
	9.0	7.8	9.5	1.99	9.0	1.87	8.4	1.75	8.1	1.70	7.8	1.64	7.3	1.52	6.7	1.41
	12.0	10.6	9.5	1.87	9.0	1.76	8.4	1.65	8.1	1.59	7.8	1.54	7.3	1.43	6.7	1.32
	15.0	13.5	9.5	1.75	9.0	1.65	8.4	1.54	8.1	1.49	7.8	1.44	7.3	1.34	6.7	1.24
7.0 (50%)	-20.0	-20.7	7.9	2.95	7.5	2.77	7.0	2.60	6.8	2.52	6.5	2.43	6.1	2.26	5.6	2.09
	-15.0	-16.0	7.9	2.74	7.5	2.58	7.0	2.42	6.8	2.34	6.5	2.26	6.1	2.10	5.6	1.94
	-12.0	-13.0	7.9	2.59	7.5	2.44	7.0	2.29	6.8	2.21	6.5	2.14	6.1	1.99	5.6	1.84
	-9.0	-10.0	7.9	2.44	7.5	2.30	7.0	2.15	6.8	2.08	6.5	2.01	6.1	1.87	5.6	1.73
	-7.0	-8.0	7.9	2.34	7.5	2.20	7.0	2.07	6.8	2.00	6.5	1.93	6.1	1.80	5.6	1.66
	-5.0	-6.0	7.9	2.25	7.5	2.11	7.0	1.98	6.8	1.92	6.5	1.85	6.1	1.72	5.6	1.59
	-3.0	-4.0	7.9	2.15	7.5	2.02	7.0	1.90	6.8	1.84	6.5	1.77	6.1	1.65	5.6	1.53
	-1.0	-2.0	7.9	2.06	7.5	1.94	7.0	1.82	6.8	1.76	6.5	1.70	6.1	1.58	5.6	1.46
	0.0	-1.0	7.9	2.02	7.5	1.90	7.0	1.78	6.8	1.72	6.5	1.66	6.1	1.55	5.6	1.43
	2.0	1.0	7.9	1.93	7.5	1.81	7.0	1.70	6.8	1.65	6.5	1.59	6.1	1.48	5.6	1.37
	5.0	4.0	7.9	1.80	7.5	1.70	7.0	1.59	6.8	1.54	6.5	1.49	6.1	1.38	5.6	1.28
	7.0	6.0	7.9	1.72	7.5	1.62	7.0	1.52	6.8	1.47	6.5	1.42	6.1	1.32	5.6	1.23
	9.0	7.8	7.9	1.66	7.5	1.56	7.0	1.46	6.8	1.42	6.5	1.37	6.1	1.27	5.6	1.18
	12.0	10.6	7.9	1.56	7.5	1.47	7.0	1.38	6.8	1.33	6.5	1.29	6.1	1.20	5.6	1.11
	15.0	13.5	7.9	1.46	7.5	1.37	7.0	1.29	6.8	1.25	6.5	1.21	6.1	1.12	5.6	1.04

■ Model: AJ∗054LCLDH

Heating capacity at rated condition: 15.1 kW (6 HP)																
Total rated capacity of indoor unit	Outdoor temperature		Indoor temperature													
			16°CDB		18°CDB		20°CDB		21°CDB		22°CDB		24°CDB		26°CDB	
	°CDB	°CWB	TC	IP	TC	IP	TC	IP	TC	IP	TC	IP	TC	IP	TC	IP
19.6 (130%)	-20.0	-20.7	10.9	3.10	10.8	3.19	10.6	3.29	10.5	3.33	10.5	3.38	10.3	3.48	10.2	3.57
	-15.0	-16.0	12.1	3.41	12.0	3.51	11.8	3.61	11.8	3.66	11.7	3.71	11.5	3.81	11.4	3.91
	-12.0	-13.0	13.0	3.61	12.9	3.71	12.7	3.81	12.7	3.87	12.6	3.92	12.5	4.02	12.3	4.13
	-9.0	-10.0	14.0	3.80	13.9	3.91	13.7	4.02	13.7	4.07	13.6	4.13	13.4	4.24	13.3	4.35
	-7.0	-8.0	14.7	3.94	14.6	4.05	14.4	4.16	14.4	4.21	14.3	4.27	14.1	4.38	14.0	4.49
	-5.0	-6.0	15.5	4.07	15.3	4.18	15.2	4.30	15.1	4.36	15.0	4.41	14.9	4.53	14.7	4.64
	-3.0	-4.0	16.2	4.21	16.1	4.32	15.9	4.44	15.9	4.50	15.8	4.56	15.6	4.68	15.2	4.64
	-1.0	-2.0	17.0	4.35	16.9	4.47	16.7	4.59	16.6	4.65	16.6	4.71	16.4	4.83	15.2	4.43
	0.0	-1.0	17.4	4.42	17.3	4.54	17.1	4.66	17.0	4.72	17.0	4.79	16.4	4.73	15.2	4.33
	2.0	1.0	18.3	4.56	18.1	4.69	17.9	4.81	17.9	4.88	17.7	4.90	16.4	4.51	15.2	4.13
	5.0	4.0	19.6	4.79	19.4	4.92	18.9	4.93	18.3	4.75	17.7	4.57	16.4	4.21	15.2	3.85
	7.0	6.0	20.4	4.94	20.2	5.06	18.9	4.71	18.3	4.53	17.7	4.36	16.4	4.01	15.2	3.67
	9.0	7.8	21.2	5.09	20.2	4.85	18.9	4.51	18.3	4.34	17.7	4.18	16.4	3.84	15.2	3.52
	12.0	10.6	21.5	4.87	20.2	4.54	18.9	4.22	18.3	4.07	17.7	3.91	16.4	3.60	15.2	3.30
	15.0	13.5	21.5	4.55	20.2	4.25	18.9	3.94	18.3	3.80	17.7	3.65	16.4	3.36	15.2	3.08
18.1 (120%)	-20.0	-20.7	10.8	3.17	10.7	3.26	10.5	3.35	10.4	3.40	10.4	3.45	10.2	3.54	10.1	3.63
	-15.0	-16.0	12.0	3.49	11.9	3.59	11.7	3.69	11.6	3.74	11.6	3.79	11.4	3.89	11.3	3.99
	-12.0	-13.0	12.9	3.69	12.8	3.80	12.6	3.90	12.5	3.95	12.5	4.00	12.3	4.11	12.2	4.21
	-9.0	-10.0	13.9	3.90	13.7	4.01	13.6	4.12	13.5	4.17	13.5	4.22	13.3	4.33	13.2	4.44
	-7.0	-8.0	14.6	4.04	14.4	4.15	14.3	4.26	14.2	4.32	14.2	4.37	14.0	4.48	13.9	4.60
	-5.0	-6.0	15.3	4.19	15.2	4.30	15.0	4.41	14.9	4.47	14.9	4.53	14.7	4.64	14.0	4.46
	-3.0	-4.0	16.1	4.33	15.9	4.45	15.8	4.56	15.7	4.62	15.6	4.68	15.2	4.64	14.0	4.26
	-1.0	-2.0	16.9	4.48	16.7	4.60	16.5	4.72	16.5	4.78	16.3	4.81	15.2	4.43	14.0	4.06
	0.0	-1.0	17.3	4.56	17.1	4.68	16.9	4.80	16.9	4.86	16.3	4.70	15.2	4.33	14.0	3.97
	2.0	1.0	18.1	4.71	17.9	4.84	17.5	4.84	16.9	4.66	16.3	4.48	15.2	4.13	14.0	3.79
	5.0	4.0	19.3	4.95	18.7	4.85	17.5	4.51	16.9	4.34	16.3	4.18	15.2	3.85	14.0	3.53
	7.0	6.0	19.8	4.95	18.7	4.63	17.5	4.30	16.9	4.14	16.3	3.99	15.2	3.67	14.0	3.37
	9.0	7.8	19.8	4.75	18.7	4.43	17.5	4.12	16.9	3.97	16.3	3.82	15.2	3.52	14.0	3.23
	12.0	10.6	19.8	4.44	18.7	4.15	17.5	3.86	16.9	3.72	16.3	3.58	15.2	3.30	14.0	3.02
	15.0	13.5	19.8	4.15	18.7	3.88	17.5	3.61	16.9	3.47	16.3	3.34	15.2	3.08	14.0	2.82
16.6 (110%)	-20.0	-20.7	10.7	3.24	10.5	3.34	10.4	3.43	10.3	3.48	10.2	3.52	10.1	3.61	10.0	3.71
	-15.0	-16.0	11.9	3.58	11.7	3.68	11.6	3.78	11.5	3.83	11.5	3.87	11.3	3.97	11.2	4.07
	-12.0	-13.0	12.8	3.80	12.6	3.90	12.5	4.00	12.4	4.05	12.3	4.10	12.2	4.21	12.1	4.31
	-9.0	-10.0	13.7	4.02	13.6	4.12	13.5	4.23	13.4	4.28	13.3	4.34	13.2	4.44	12.8	4.44
	-7.0	-8.0	14.4	4.17	14.3	4.28	14.1	4.38	14.1	4.44	14.0	4.49	13.9	4.60	12.8	4.25
	-5.0	-6.0	15.1	4.32	15.0	4.43	14.9	4.54	14.8	4.60	14.7	4.66	13.9	4.42	12.8	4.06
	-3.0	-4.0	15.9	4.48	15.7	4.59	15.6	4.71	15.5	4.76	15.0	4.58	13.9	4.23	12.8	3.88
	-1.0	-2.0	16.7	4.64	16.5	4.76	16.0	4.71	15.5	4.54	15.0	4.37	13.9	4.03	12.8	3.70
	0.0	-1.0	17.0	4.72	16.9	4.84	16.0	4.60	15.5	4.44	15.0	4.27	13.9	3.94	12.8	3.62
	2.0	1.0	17.8	4.89	17.1	4.72	16.0	4.40	15.5	4.23	15.0	4.08	13.9	3.76	12.8	3.45
	5.0	4.0	18.2	4.71	17.1	4.40	16.0	4.10	15.5	3.95	15.0	3.80	13.9	3.50	12.8	3.22
	7.0	6.0	18.2	4.49	17.1	4.20	16.0	3.91	15.5	3.76	15.0	3.62	13.9	3.34	12.8	3.07
	9.0	7.8	18.2	4.30	17.1	4.02	16.0	3.74	15.5	3.61	15.0	3.47	13.9	3.20	12.8	2.94
	12.0	10.6	18.2	4.03	17.1	3.76	16.0	3.51	15.5	3.38	15.0	3.25	13.9	3.00	12.8	2.75
	15.0	13.5	18.2	3.76	17.1	3.52	16.0	3.27	15.5	3.15	15.0	3.03	13.9	2.80	12.8	2.57
15.1 (100%)	-20.0	-20.7	10.9	3.34	10.8	3.43	10.6	3.52	10.5	3.56	10.5	3.61	10.3	3.70	10.2	3.79
	-15.0	-16.0	12.1	3.69	12.0	3.78	11.9	3.88	11.8	3.93	11.7	3.98	11.6	4.08	11.4	4.17
	-12.0	-13.0	13.0	3.92	12.9	4.02	12.8	4.12	12.7	4.17	12.6	4.22	12.5	4.32	12.1	4.28
	-9.0	-10.0	14.0	4.15	13.9	4.26	13.8	4.36	13.7	4.41	13.6	4.47	13.1	4.37	12.1	4.01
	-7.0	-8.0	14.7	4.31	14.6	4.42	14.5	4.53	14.4	4.58	14.1	4.52	13.1	4.18	12.1	3.84
	-5.0	-6.0	15.5	4.48	15.3	4.59	15.1	4.66	14.6	4.49	14.1	4.32	13.1	4.00	12.1	3.67
	-3.0	-4.0	16.2	4.65	16.1	4.76	15.1	4.45	14.6	4.29	14.1	4.13	13.1	3.82	12.1	3.51
	-1.0	-2.0	17.0	4.82	16.1	4.56	15.1	4.25	14.6	4.10	14.1	3.94	13.1	3.64	12.1	3.35
	0.0	-1.0	17.1	4.76	16.1	4.45	15.1	4.15	14.6	4.00	14.1	3.85	13.1	3.56	12.1	3.27
	2.0	1.0	17.1	4.54	16.1	4.25	15.1	3.96	14.6	3.82	14.1	3.68	13.1	3.40	12.1	3.12
	5.0	4.0	17.1	4.23	16.1	3.96	15.1	3.69	14.6	3.56	14.1	3.43	13.1	3.16	12.1	2.91
	7.0	6.0	17.1	4.04	16.1	3.78	15.1	3.52	14.6	3.39	14.1	3.27	13.1	3.02	12.1	2.77
	9.0	7.8	17.1	3.87	16.1	3.62	15.1	3.37	14.6	3.25	14.1	3.13	13.1	2.89	12.1	2.66
	12.0	10.6	17.1	3.62	16.1	3.39	15.1	3.16	14.6	3.04	14.1	2.93	13.1	2.71	12.1	2.49
	15.0	13.5	17.1	3.38	16.1	3.16	15.1	2.95	14.6	2.84	14.1	2.74	13.1	2.53	12.1	2.32
13.5 (90%)	-20.0	-20.7	10.7	3.44	10.6	3.53	10.4	3.62	10.4	3.67	10.3	3.71	10.2	3.80	10.0	3.90
	-15.0	-16.0	12.0	3.82	11.8	3.91	11.7	4.01	11.6	4.06	11.5	4.10	11.4	4.20	10.9	4.07
	-12.0	-13.0	12.8	4.06	12.7	4.16	12.6	4.26	12.5	4.31	12.4	4.36	11.8	4.17	10.9	3.84
	-9.0	-10.0	13.8	4.31	13.7	4.42	13.5	4.52	13.1	4.39	12.7	4.23	11.8	3.91	10.9	3.60
	-7.0	-8.0	14.5	4.49	14.4	4.59	13.5	4.35	13.1	4.20	12.7	4.04	11.8	3.74	10.9	3.44
	-5.0	-6.0	15.2	4.66	14.5	4.46	13.5	4.16	13.1	4.01	12.7	3.86	11.8	3.57	10.9	3.29
	-3.0	-4.0	15.4	4.55	14.5	4.26	13.5	3.97	13.1	3.83	12.7	3.69	11.8	3.41	10.9	3.14
	-1.0	-2.0	15.4	4.34	14.5	4.06	13.5	3.79	13.1	3.66	12.7	3.52	11.8	3.26	10.9	3.00
	0.0	-1.0	15.4	4.24	14.5	3.97	13.5	3.71	13.1	3.57	12.7	3.44	11.8	3.18	10.9	2.93
	2.0	1.0	15.4	4.05	14.5	3.79	13.5	3.54	13.1	3.41	12.7	3.28	11.8	3.04	10.9	2.79
	5.0	4.0	15.4	3.77	14.5	3.53	13.5	3.29	13.1	3.18	12.7	3.06	11.8	2.83	10.9	2.60
	7.0	6.0	15.4	3.60	14.5	3.37	13.5	3.14	13.1	3.03	12.7	2.92	11.8	2.70	10.9	2.48
	9.0	7.8	15.4	3.45	14.5	3.23	13.5	3.01	13.1	2.90	12.7	2.80	11.8	2.59	10.9	2.38
	12.0	10.6	15.4	3.23	14.5	3.02	13.5	2.82	13.1	2.72	12.7	2.62	11.8	2.42	10.9	2.23
	15.0	13.5	15.4	3.01	14.5	2.82	13.5	2.63	13.1	2.54	12.7	2.45	11.8	2.26	10.9	2.08

Heating capacity at rated condition: 15.1 kW (6 HP)																
Total rated capacity of indoor unit	Outdoor temperature		Indoor temperature													
			16°CDB		18°CDB		20°CDB		21°CDB		22°CDB		24°CDB		26°CDB	
	°CDB	°CWB	TC	IP	TC	IP	TC	IP	TC	IP	TC	IP	TC	IP	TC	IP
12.0 (80%)	-20.0	-20.7	10.5	3.57	10.4	3.66	10.2	3.75	10.2	3.80	10.1	3.84	10.0	3.93	9.7	3.93
	-15.0	-16.0	11.7	3.97	11.6	4.06	11.5	4.16	11.4	4.21	11.3	4.23	10.5	3.92	9.7	3.61
	-12.0	-13.0	12.6	4.23	12.5	4.33	12.0	4.28	11.7	4.13	11.3	3.98	10.5	3.69	9.7	3.40
	-9.0	-10.0	13.6	4.51	12.9	4.30	12.0	4.01	11.7	3.87	11.3	3.73	10.5	3.46	9.7	3.18
	-7.0	-8.0	13.7	4.38	12.9	4.11	12.0	3.84	11.7	3.71	11.3	3.57	10.5	3.31	9.7	3.05
	-5.0	-6.0	13.7	4.19	12.9	3.93	12.0	3.67	11.7	3.54	11.3	3.41	10.5	3.16	9.7	2.91
	-3.0	-4.0	13.7	4.00	12.9	3.75	12.0	3.51	11.7	3.38	11.3	3.26	10.5	3.02	9.7	2.78
	-1.0	-2.0	13.7	3.82	12.9	3.58	12.0	3.35	11.7	3.23	11.3	3.11	10.5	2.88	9.7	2.65
	0.0	-1.0	13.7	3.73	12.9	3.50	12.0	3.27	11.7	3.15	11.3	3.04	10.5	2.81	9.7	2.59
	2.0	1.0	13.7	3.56	12.9	3.34	12.0	3.12	11.7	3.01	11.3	2.90	10.5	2.68	9.7	2.47
	5.0	4.0	13.7	3.32	12.9	3.11	12.0	2.91	11.7	2.80	11.3	2.70	10.5	2.50	9.7	2.30
	7.0	6.0	13.7	3.17	12.9	2.97	12.0	2.77	11.7	2.67	11.3	2.58	10.5	2.39	9.7	2.20
	9.0	7.8	13.7	3.04	12.9	2.84	12.0	2.66	11.7	2.56	11.3	2.47	10.5	2.29	9.7	2.11
	12.0	10.6	13.7	2.84	12.9	2.66	12.0	2.49	11.7	2.40	11.3	2.31	10.5	2.14	9.7	1.97
	15.0	13.5	13.7	2.65	12.9	2.49	12.0	2.32	11.7	2.24	11.3	2.16	10.5	2.00	9.7	1.84
10.5 (70%)	-20.0	-20.7	10.3	3.74	10.1	3.82	10.0	3.91	9.9	3.95	9.8	4.00	9.2	3.72	8.5	3.43
	-15.0	-16.0	11.4	4.16	11.3	4.23	10.5	3.96	10.2	3.82	9.9	3.69	9.2	3.42	8.5	3.15
	-12.0	-13.0	12.0	4.24	11.3	3.98	10.5	3.73	10.2	3.60	9.9	3.47	9.2	3.22	8.5	2.96
	-9.0	-10.0	12.0	3.98	11.3	3.73	10.5	3.49	10.2	3.37	9.9	3.25	9.2	3.01	8.5	2.78
	-7.0	-8.0	12.0	3.81	11.3	3.57	10.5	3.34	10.2	3.23	9.9	3.11	9.2	2.88	8.5	2.66
	-5.0	-6.0	12.0	3.64	11.3	3.41	10.5	3.19	10.2	3.08	9.9	2.97	9.2	2.75	8.5	2.54
	-3.0	-4.0	12.0	3.47	11.3	3.26	10.5	3.05	10.2	2.94	9.9	2.84	9.2	2.63	8.5	2.42
	-1.0	-2.0	12.0	3.32	11.3	3.11	10.5	2.91	10.2	2.81	9.9	2.71	9.2	2.51	8.5	2.31
	0.0	-1.0	12.0	3.24	11.3	3.04	10.5	2.84	10.2	2.74	9.9	2.65	9.2	2.45	8.5	2.26
	2.0	1.0	12.0	3.09	11.3	2.90	10.5	2.71	10.2	2.62	9.9	2.52	9.2	2.34	8.5	2.16
	5.0	4.0	12.0	2.88	11.3	2.70	10.5	2.53	10.2	2.44	9.9	2.35	9.2	2.18	8.5	2.01
	7.0	6.0	12.0	2.75	11.3	2.58	10.5	2.41	10.2	2.33	9.9	2.24	9.2	2.08	8.5	1.92
	9.0	7.8	12.0	2.63	11.3	2.47	10.5	2.31	10.2	2.23	9.9	2.15	9.2	1.99	8.5	1.84
	12.0	10.6	12.0	2.47	11.3	2.31	10.5	2.16	10.2	2.09	9.9	2.02	9.2	1.87	8.5	1.72
	15.0	13.5	12.0	2.30	11.3	2.16	10.5	2.02	10.2	1.95	9.9	1.88	9.2	1.75	8.5	1.61
9.0 (60%)	-20.0	-20.7	9.9	3.94	9.7	3.93	9.0	3.68	8.8	3.56	8.5	3.43	7.9	3.19	7.2	2.94
	-15.0	-16.0	10.3	3.84	9.7	3.61	9.0	3.38	8.8	3.27	8.5	3.15	7.9	2.93	7.2	2.70
	-12.0	-13.0	10.3	3.62	9.7	3.40	9.0	3.18	8.8	3.07	8.5	2.96	7.9	2.75	7.2	2.54
	-9.0	-10.0	10.3	3.39	9.7	3.18	9.0	2.98	8.8	2.88	8.5	2.78	7.9	2.58	7.2	2.38
	-7.0	-8.0	10.3	3.24	9.7	3.04	9.0	2.85	8.8	2.75	8.5	2.66	7.9	2.46	7.2	2.27
	-5.0	-6.0	10.3	3.10	9.7	2.91	9.0	2.72	8.8	2.63	8.5	2.54	7.9	2.35	7.2	2.17
	-3.0	-4.0	10.3	2.96	9.7	2.78	9.0	2.60	8.8	2.51	8.5	2.42	7.9	2.25	7.2	2.08
	-1.0	-2.0	10.3	2.82	9.7	2.65	9.0	2.48	8.8	2.40	8.5	2.31	7.9	2.15	7.2	1.98
	0.0	-1.0	10.3	2.76	9.7	2.59	9.0	2.42	8.8	2.34	8.5	2.26	7.9	2.10	7.2	1.94
	2.0	1.0	10.3	2.63	9.7	2.47	9.0	2.31	8.8	2.23	8.5	2.16	7.9	2.00	7.2	1.85
	5.0	4.0	10.3	2.45	9.7	2.30	9.0	2.16	8.8	2.08	8.5	2.01	7.9	1.87	7.2	1.72
	7.0	6.0	10.3	2.34	9.7	2.20	9.0	2.06	8.8	1.99	8.5	1.92	7.9	1.78	7.2	1.64
	9.0	7.8	10.3	2.24	9.7	2.11	9.0	1.97	8.8	1.91	8.5	1.84	7.9	1.71	7.2	1.58
	12.0	10.6	10.3	2.10	9.7	1.97	9.0	1.85	8.8	1.79	8.5	1.72	7.9	1.60	7.2	1.48
	15.0	13.5	10.3	1.96	9.7	1.84	9.0	1.73	8.8	1.67	8.5	1.61	7.9	1.50	7.2	1.38
7.6 (50%)	-20.0	-20.7	8.6	3.47	8.1	3.27	7.6	3.06	7.3	2.96	7.0	2.86	6.5	2.66	6.0	2.46
	-15.0	-16.0	8.6	3.19	8.1	3.00	7.6	2.81	7.3	2.72	7.0	2.63	6.5	2.44	6.0	2.25
	-12.0	-13.0	8.6	3.00	8.1	2.82	7.6	2.64	7.3	2.56	7.0	2.47	6.5	2.29	6.0	2.12
	-9.0	-10.0	8.6	2.81	8.1	2.64	7.6	2.48	7.3	2.39	7.0	2.31	6.5	2.15	6.0	1.98
	-7.0	-8.0	8.6	2.69	8.1	2.53	7.6	2.37	7.3	2.29	7.0	2.21	6.5	2.05	6.0	1.90
	-5.0	-6.0	8.6	2.57	8.1	2.42	7.6	2.26	7.3	2.19	7.0	2.11	6.5	1.96	6.0	1.81
	-3.0	-4.0	8.6	2.45	8.1	2.31	7.6	2.16	7.3	2.09	7.0	2.02	6.5	1.87	6.0	1.73
	-1.0	-2.0	8.6	2.34	8.1	2.20	7.6	2.06	7.3	1.99	7.0	1.93	6.5	1.79	6.0	1.65
	0.0	-1.0	8.6	2.29	8.1	2.15	7.6	2.02	7.3	1.95	7.0	1.88	6.5	1.75	6.0	1.62
	2.0	1.0	8.6	2.18	8.1	2.05	7.6	1.92	7.3	1.86	7.0	1.80	6.5	1.67	6.0	1.54
	5.0	4.0	8.6	2.03	8.1	1.91	7.6	1.79	7.3	1.73	7.0	1.68	6.5	1.56	6.0	1.44
	7.0	6.0	8.6	1.94	8.1	1.83	7.6	1.71	7.3	1.66	7.0	1.60	6.5	1.49	6.0	1.38
	9.0	7.8	8.6	1.86	8.1	1.75	7.6	1.64	7.3	1.59	7.0	1.53	6.5	1.43	6.0	1.32
	12.0	10.6	8.6	1.74	8.1	1.64	7.6	1.54	7.3	1.49	7.0	1.44	6.5	1.34	6.0	1.24
	15.0	13.5	8.6	1.63	8.1	1.54	7.6	1.44	7.3	1.39	7.0	1.35	6.5	1.25	6.0	1.16

Refrigerant R410A

INVERTER

AIRSTAGE™

Variable Refrigerant Flow System

3. OUTDOOR UNITS

2021.01.29
DV_CH03_J4SE067EF_03

CONTENTS

3. OUTDOOR UNITS

1. Model lineup 03-1

1-1. Stand-alone 03-1

2. Specifications 03-2

2-1. Stand-alone 03-2

3. Dimensions 03-3

3-1. Stand-alone 03-3

4. Installation space 03-4

4-1. Space requirement 03-5

4-2. Duct installation 03-8

5. Refrigerant circuit 03-10

5-1. Models: AJ∗040LCLDH, AJ∗045LCLDH, and AJ∗054LCLDH 03-10

5-2. Symbol description 03-11

6. Wiring diagrams 03-12

6-1. Models: AJ∗040LCLDH and AJ∗045LCLDH 03-12

6-2. Model: AJ∗054LCLDH 03-13

7. Operation range 03-14

7-1. Outdoor unit 03-14

7-2. Indoor unit 03-14

8. Operation noise (sound pressure) 03-15

8-1. Noise level curve 03-15

8-2. Sound level check point 03-16

9. Electrical characteristics 03-17

9-1. Stand-alone 03-17

10. Safety devices 03-18

11. Accessories 03-19

11-1.Stand-alone 03-19

1. Model lineup

1-1. Stand-alone

Lineup from 4 HP to 6 HP in 1 HP increments.

HP	Cooling capacity (kW)	Model name	Connectable indoor unit
4	12.1	AJ∗040LCLDH	1 to 11
5	14.0	AJ∗045LCLDH	1 to 12
6	15.1	AJ∗054LCLDH	1 to 13

OUTDOOR UNITS

2. Specifications

2-1. Stand-alone

Nominal system capacity				HP	4	5	6
Model name					**AJ∗040LCLDH**	**AJ∗045LCLDH**	**AJ∗054LCLDH**
Power supply					230 V ~ 50 Hz		
Available voltage range					198—264 V		
Capacity		Cooling	Rated	kW	12.1	14.0	15.1
				Btu/h	41,200	47,700	51,500
		Heating	Rated (Nominal)	kW	12.1	14.0	15.1
				Btu/h	41,200	47,700	51,500
			Maximum	kW	13.6	16.0	16.5
				Btu/h	46,400	54,500	56,200
Input power		Cooling	Rated	kW	3.75	4.71	5.55
		Heating	Rated (Nominal)		3.22	3.77	4.33
			Maximum		3.99	5.04	5.32
Current		Cooling	Rated	A	16.5	20.7	24.4
		Heating	Rated (Nominal)		14.1	16.6	19.0
Power factor		Cooling		%	99		
		Heating			99		
EER		Cooling		W/W	3.22	2.97	2.72
COP		Heating	Rated (Nominal)		3.75	3.71	3.48
			Maximum		3.40	3.17	3.10
Fan	Airflow rate	Cooling / Heating	HIGH	m^3/h (l/s)	4,240 (1,178)	4,400 (1,222)	
	External static pressure (Max.)			Pa	25		
	Type × Q'ty				Propeller fan × 1		
	Motor	Type × Q'ty			DC motor × 1		
		Motor output		W	111		
Sound pressure level*		Cooling		dB (A)	53		54
		Heating			54	56	
Sound power level		Cooling		dB (A)	67	69	70
		Heating			68	69	70
Heat exchanger type		Length		mm	922		
		Fin pitch			1.45		
		Rows × Stages			3 × 46		
		Face area		m^2	0.9		
		Pipe type (Material)			Grooved H-pin (Copper)		
		Fin	Type		Corrugate (Aluminum)		
			Surface treatment		Corrosion resistance (Blue fin)		
Compressor		Type × Q'ty			Rotary (inv) × 1		
		Displacement		cm^3	29.8		
		Motor output		kW	2.1		
		Crankcase heater		W	21		
Refrigerant		Type (Global Warming Potential)			R410A (2088)		
		Charge		kg	4.0		
Refrigerant oil		Type			POE		
		Amount		cm^3	1,150		
Enclosure		Material			Painted galvanized steel		
		Color			Beige Approximate color of Munsell 10YR 7.5/1.0NN		
Dimensions (H × W × D)		Net		mm	998 × 970 × 370		
		Gross			1,162 × 1,064 × 478		
Weight		Net		kg	88		
		Gross			97		98
Connection pipe		Pipe diameter	Liquid	mm (in)	Ø 9.52 (Ø 3/8)		
			Suction gas		Ø 15.88 (Ø 5/8)		
		Method	Liquid		Flare		
			Suction gas		Flare		
		Between outdoor unit and the farthest indoor unit		m	50		
		Total pipe length			80		
		Max. height difference			30/30 (Outdoor unit: Higher/Lower)		
Operation temperature range		Cooling		°CDB	-5 to 46		
		Heating			-20 to 21		
Defrost method					Reversed cycle		
Compressor capacity control (Steps/Range)					81 steps/20 to 100 rps	91 steps/20 to 110 rps	
Connectable indoor units number			Maximum		11	12	13
			Minimum		1		

NOTES:

- Specifications are based on the following conditions:
  - Cooling: Indoor temperature of 27 °CDB/19 °CWB, and outdoor temperature of 35 °CDB/24 °CWB.
  - Heating: Indoor temperature of 20 °CDB/15 °CWB, and outdoor temperature of 7 °CDB/6 °CWB.
  - Pipe length: 7.5 m, Height difference: 0 m. (Between outdoor unit and indoor unit.)
- This data is based on following standard: EN14511, EN12102.
- Protective function might work when using it outside the operation range.
- *: Sound pressure level:
  - Measured values in manufacturer's anechoic chamber.
  - Because of the surrounding sound environment, the sound levels measured in actual installation conditions might be higher than the specified values here.

OUTDOOR UNITS

OUTDOOR UNITS

3. Dimensions

3-1. Stand-alone

■ Models: AJ∗040LCLDH, AJ∗045LCLDH, and AJ∗054LCLDH

Unit: mm

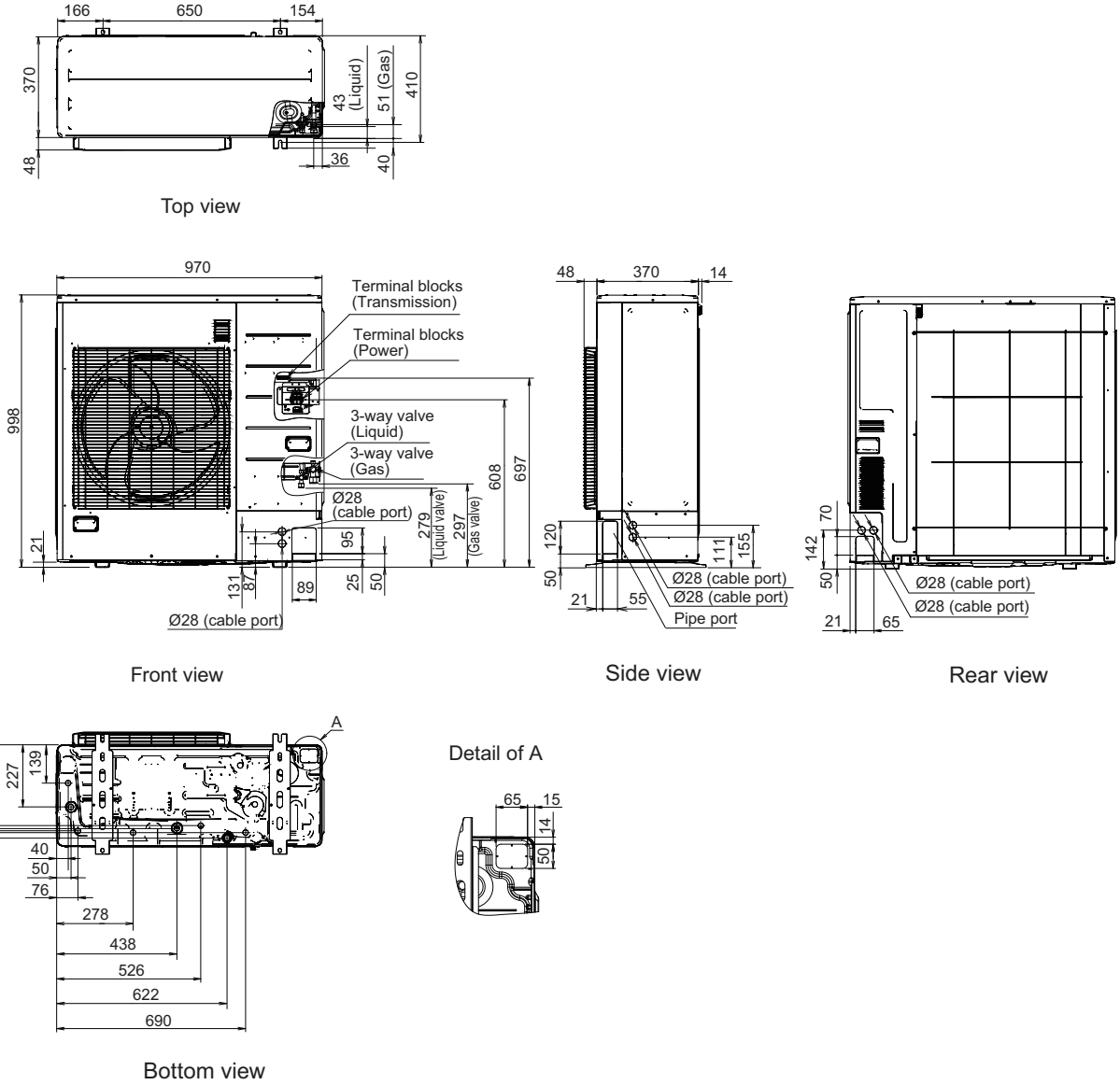

4. Installation space

⚠ CAUTION

- The installation space shown in the following examples is based on an ambient temperature under cooling operation of 35°CDB at the air intake of the outdoor unit.
  Provide more space around the air intake than shown in the examples if the ambient temperature exceeds 35°CDB or if the thermal load of all of the outdoor units exceeds the capacity.
- Consider the transportation route, installation space, maintenance space, and access, and install the unit in a location with sufficient space for the refrigerant piping.
- Observe the installation space specifications that are shown in the figures.
  Provide the same space for the air intake at the rear of the outdoor unit.
  If the installation is not performed according to the specifications, it could cause a short circuit and result in a lack of operating performance. As a result, the outdoor unit might easily be stopped by high-pressure protection.
- Installation methods not shown in the following examples are not recommended. Performance may drop significantly.

OUTDOOR UNITS

4-1. Space requirement

Provide sufficient installation space for product safety.

● Single outdoor unit installation

- **When the upper space is open:**

Unit: mm

When there are obstacles at the rear only.

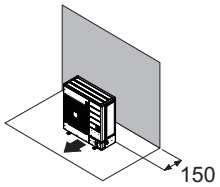

When there are obstacles at the rear and sides.

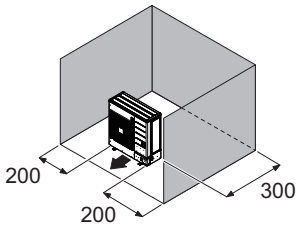

When there are obstacles at the front only.

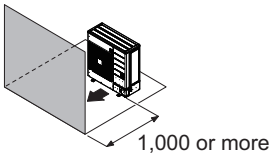

When there are obstacles at the front and rear.

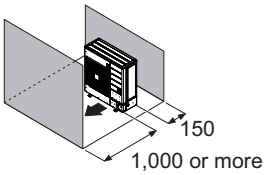

- **When there is an obstruction in the upper space:**

Unit: mm

When there are obstacles at the rear and above.

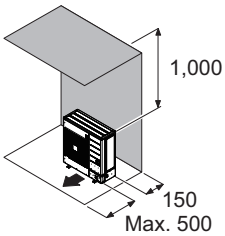

When there are obstacles at the rear, sides, and above.

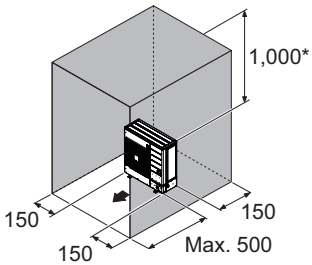

NOTES:

- *: When the upward area is 1000 mm or less, refer to "Duct installation" on page 03-8

● Multiple outdoor unit installation

NOTES:

- Provide at least 100 mm of space between the outdoor units if multiple units are installed.
- When routing the piping from the side of an outdoor unit, provide space for the piping.
- No more than 3 units must be installed side by side.
  When 3 units or more are arranged in a line, provide the space as shown in the following example when an obstruction is present also in the upward area.

- **When the upper space is open:**

Unit: mm

When there are obstacles at the rear only.

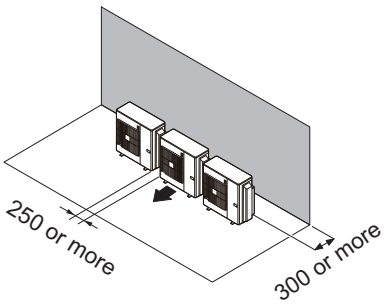

When there are obstacles at the front only.

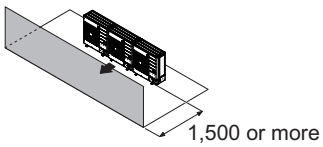

When there are obstacles at the front and rear.

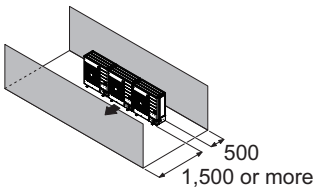

- **When there is an obstruction in the upper space:**

Unit: mm

When there are obstacles at the rear and above.

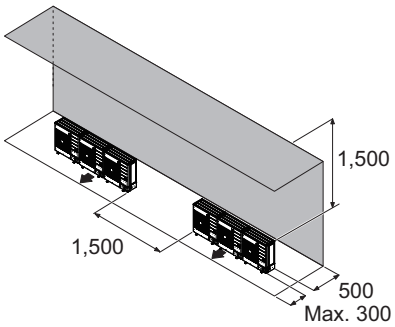

● Outdoor unit installation in multi-row

NOTE: Following settings are not recommended in case of cooling by a low outside temperature.

Unit: mm

Single parallel unit arrangement

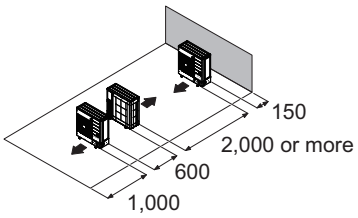

Multiple parallel unit arrangement

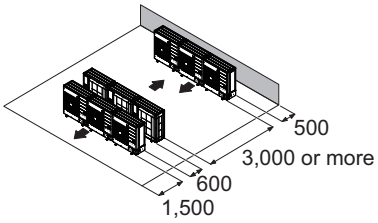

OUTDOOR UNITS

4-2. Duct installation

When the upward area is 1,000 mm or less, it may be necessary to install a duct.

- A: Keep the upward area over 100 mm, even if a duct is installed.
- B: 19 in (500 mm) or less

Unit: mm

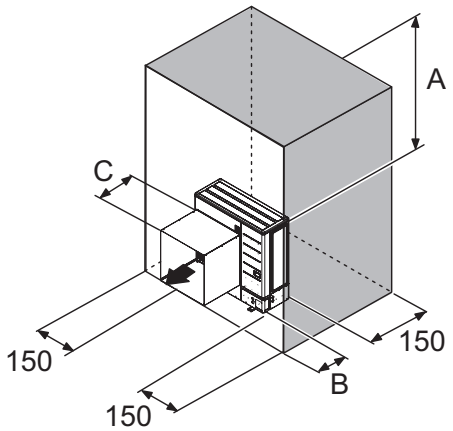

A	B	Duct installation	C (Duct length)
A ≥ 1,000	B ≤ 500	Unnecessary	—
100 ≤ A < 1,000	0 < B ≤ 500	Necessary	B
	B = 0	Unnecessary	—

■ About the duct

The duct is field supplied. When installing the duct, be careful of the followings:

- Do not block the vent hole. It may cause malfunction.
- Do not cover the service panel. If covered, the panel cannot be opened for servicing.
- Screw holes for installing the duct are placed on the front panel. Fix the duct by using a Ø4 tapping screw. (See the following diagram for the location.)
- The weight of the duct should not exceed 11 kg significantly. The front panel may become deformed due to the weight of the duct.

● Models: AJ∗040LCLDH, AJ∗045LCLDH, and AJ∗054LCLDH

Unit: mm

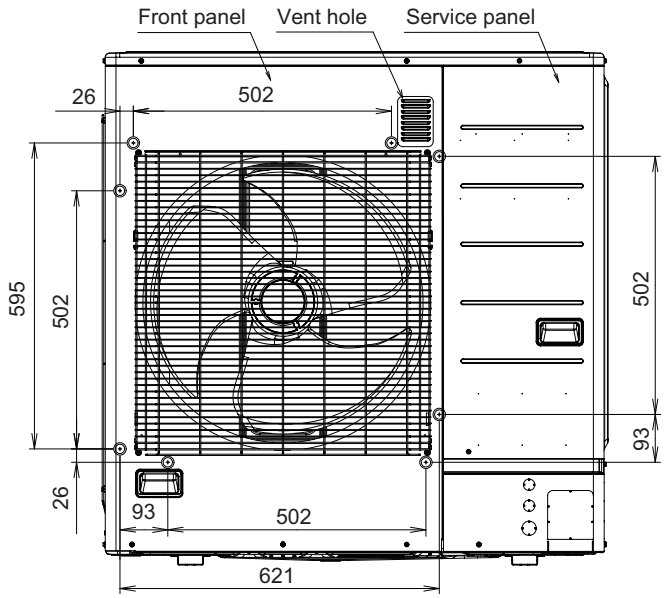

■ Duct installation example

● Models: AJ∗040LCLDH, AJ∗045LCLDH, and AJ∗054LCLDH

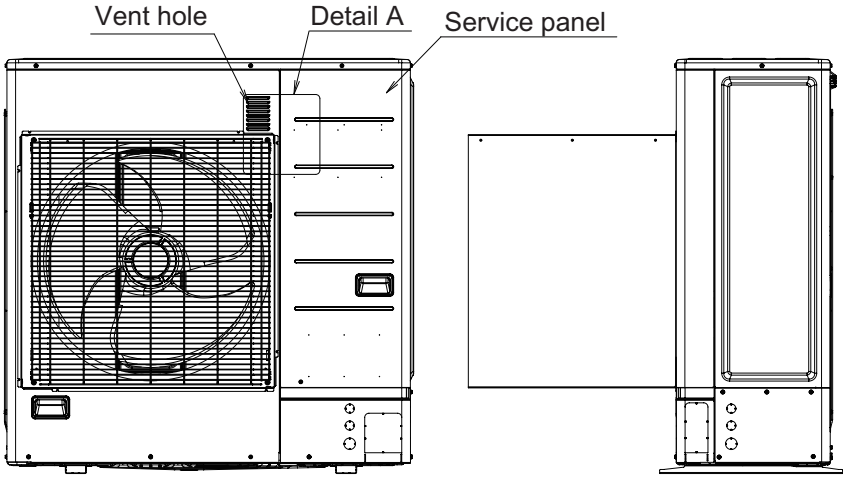

Detail A

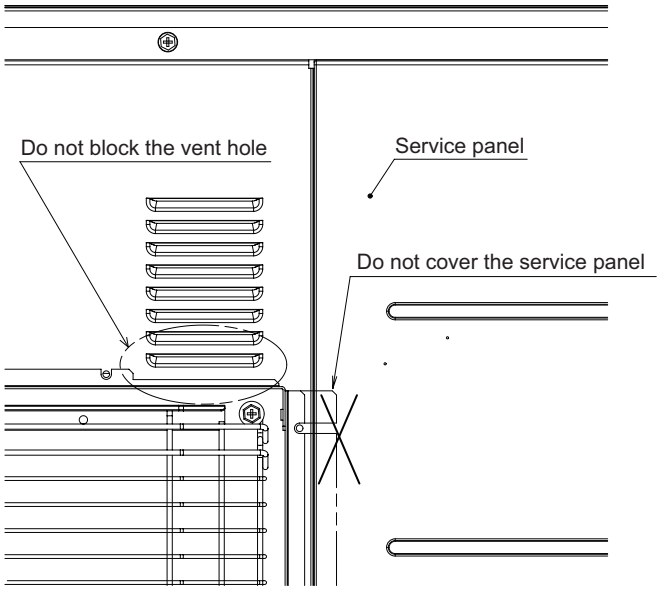

OUTDOOR UNITS

5. Refrigerant circuit

5-1. Models: AJ∗040LCLDH, AJ∗045LCLDH, and AJ∗054LCLDH

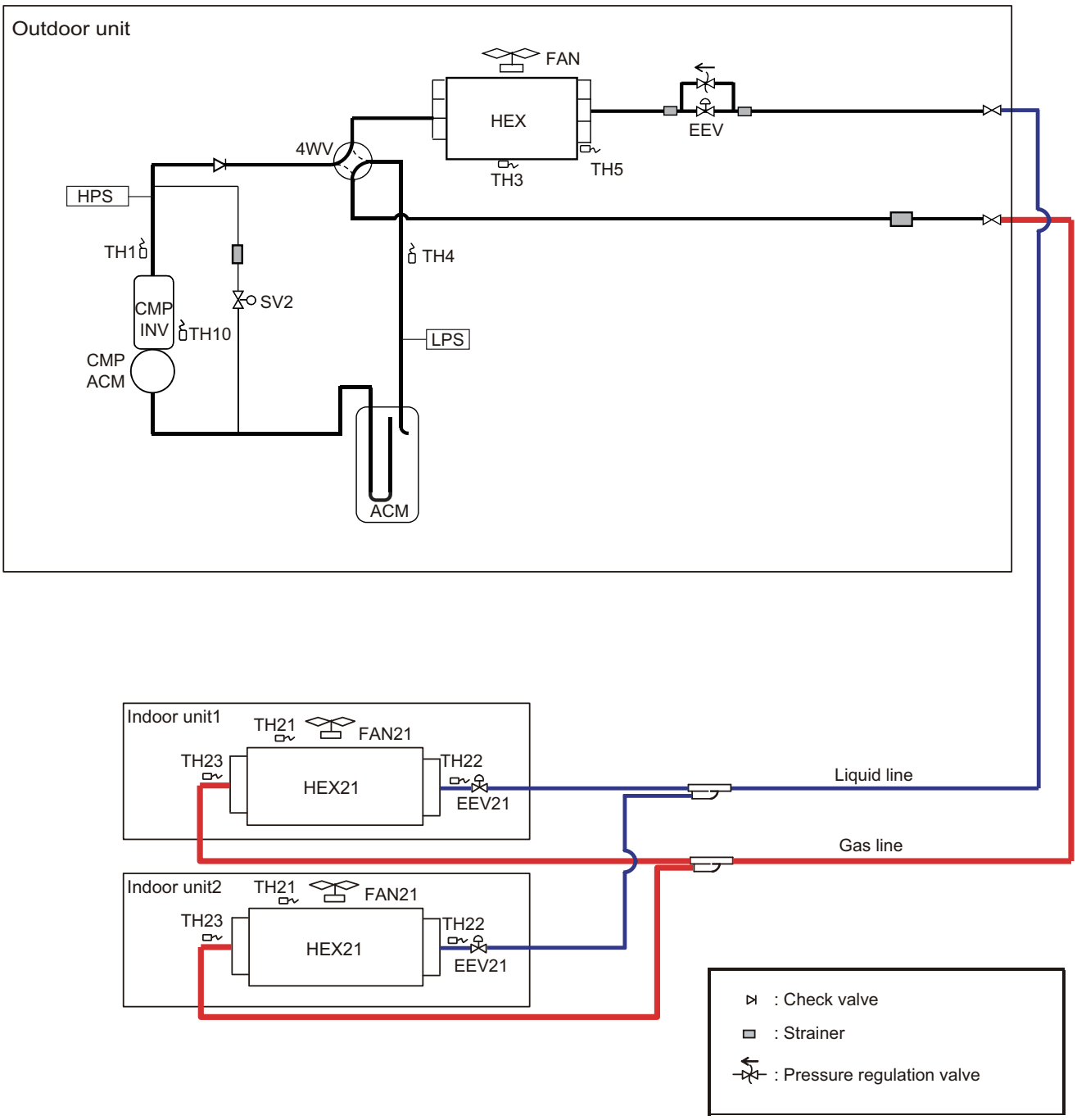

5-2. Symbol description

- **Outdoor unit**

Symbol	Description	Marking color
CMP	Compressor (Inverter type)	—
HEX	Heat exchanger	—
FAN	Fan	—
ACM	Accumulator	—
HPS	High pressure sensor	—
LPS	Low pressure sensor	—
4WV	4-way valve	—
EEV	Electric expansion valve	—
SV2	Solenoid valve	—
TH1	Discharge temperature thermistor	Blue
TH3	Outdoor temperature thermistor	—
TH4	Suction temperature thermistor	Red
TH5	Heat exchanger (outlet) thermistor	Pink
TH10	Compressor temperature thermistor	—

- **Indoor unit**

Symbol	Description
HEX21	Heat exchanger
FAN21	Fan
EEV21	Electric expansion valve
TH21	Room temperature thermistor
TH22	Heat exchanger (inlet) thermistor
TH23	Heat exchanger (outlet) thermistor

OUTDOOR UNITS

6. Wiring diagrams

6-1. Models: AJ∗040LCLDH and AJ∗045LCLDH

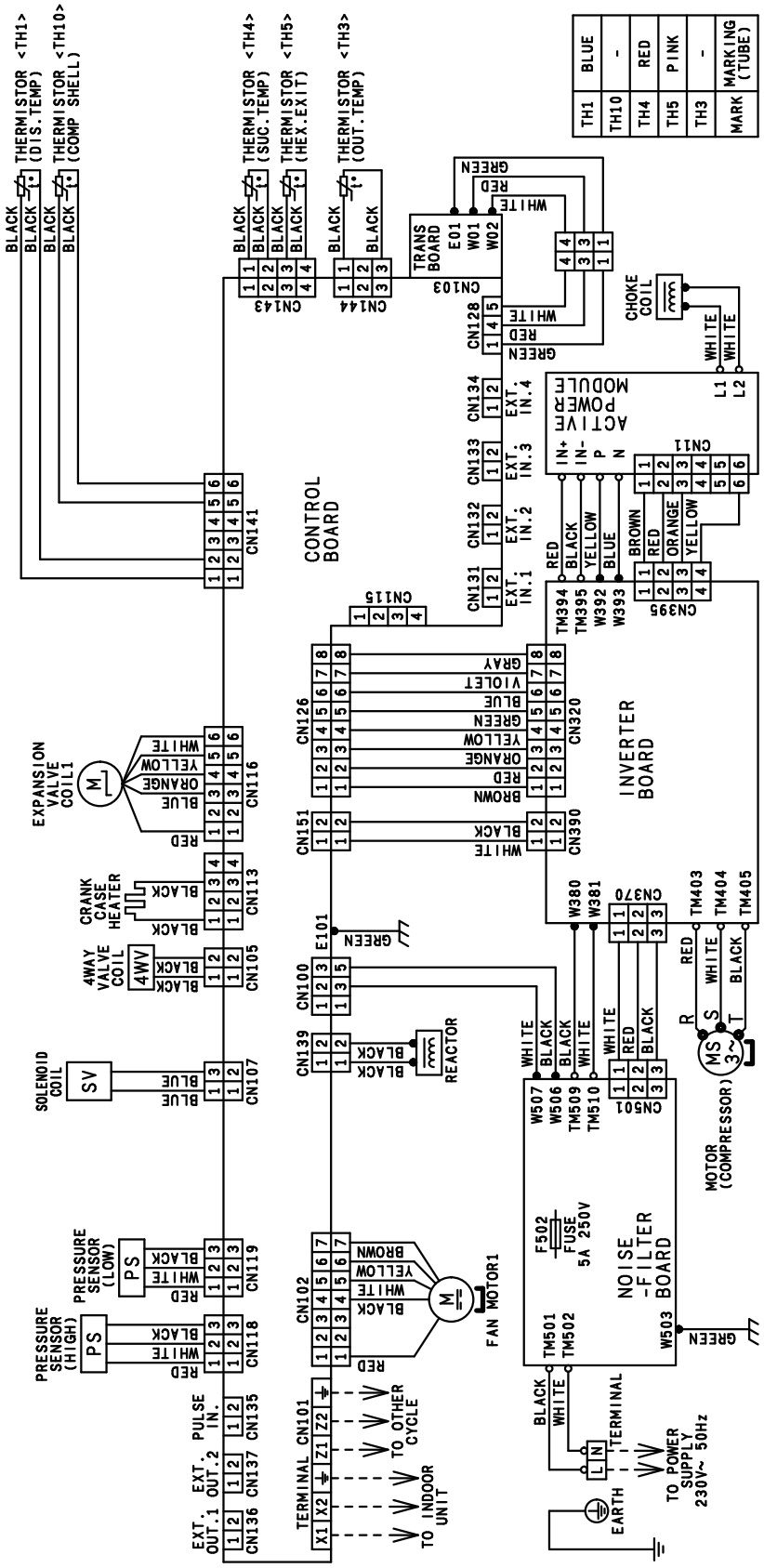

6-2. Model: AJ∗054LCLDH

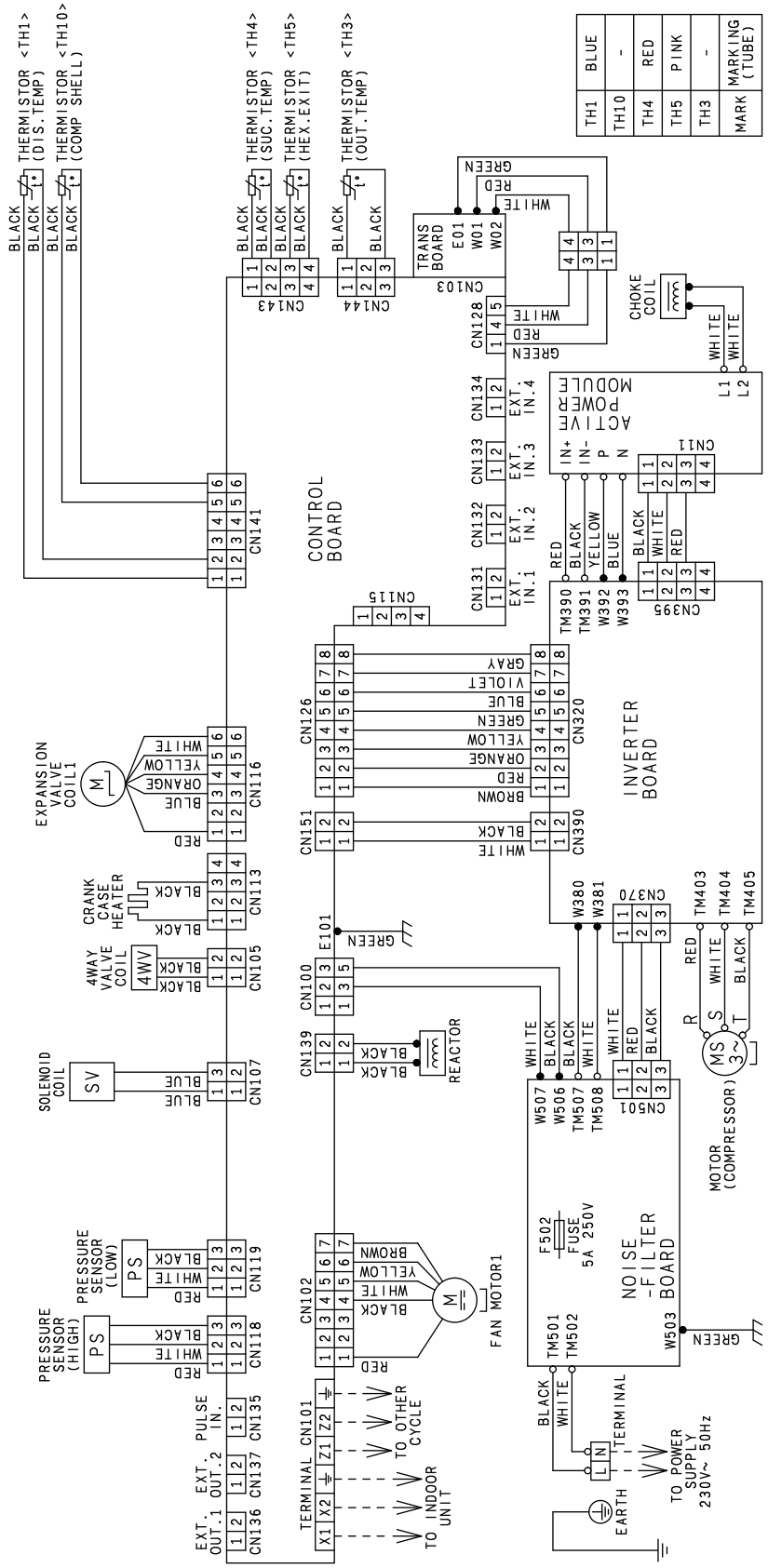

7. Operation range

7-1. Outdoor unit

Operation mode	AJ∗040LCLDH	AJ∗045LCLDH	AJ∗054LCLDH
Cooling/Dry	-5 to 46 °CDB		
Heating	-20 to 21 °CDB		

7-2. Indoor unit

Operation mode	Operation range
Cooling/Dry	18 to 32 °CDB R.H. 80% or less
Heating	10 to 30 °CDB

R.H.: Relative humidity

OUTDOOR UNITS

8. Operation noise (sound pressure)

8-1. Noise level curve

■ Model: AJ∗040LCLDH

● Cooling

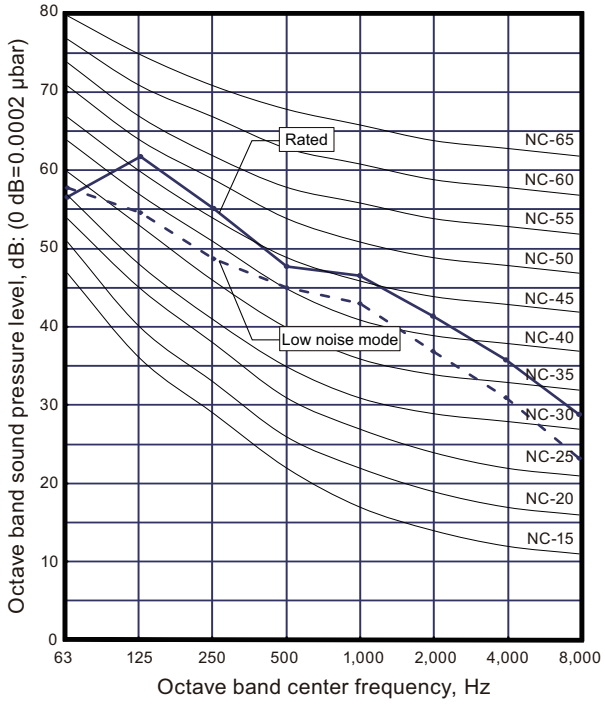

● Heating

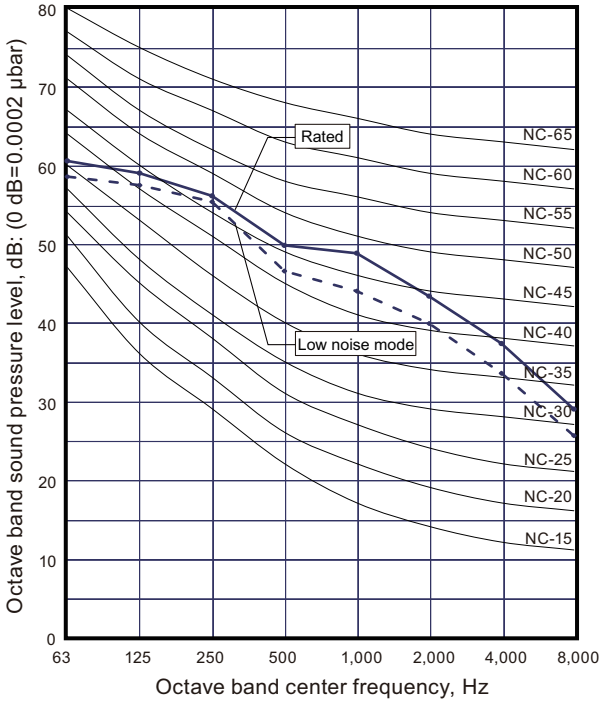

■ Model: AJ∗045LCLDH

● Cooling

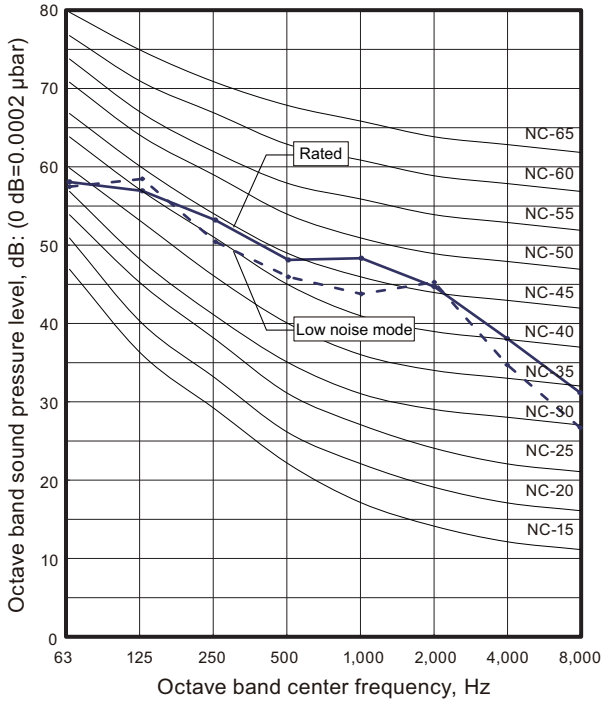

● Heating

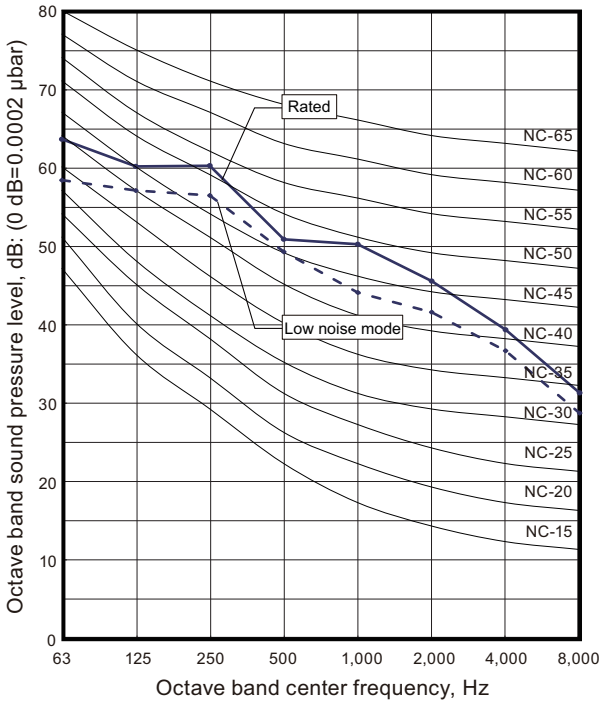

OUTDOOR UNITS

■ Model: AJ∗054LCLDH

● Cooling

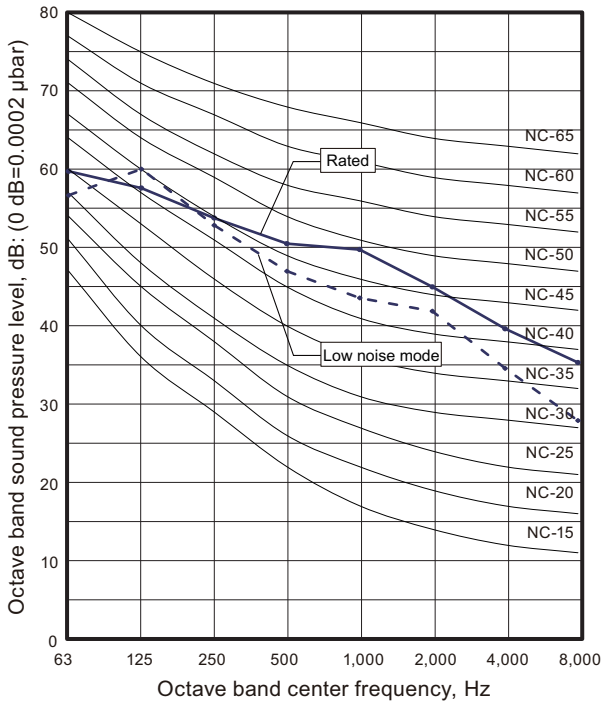

● Heating

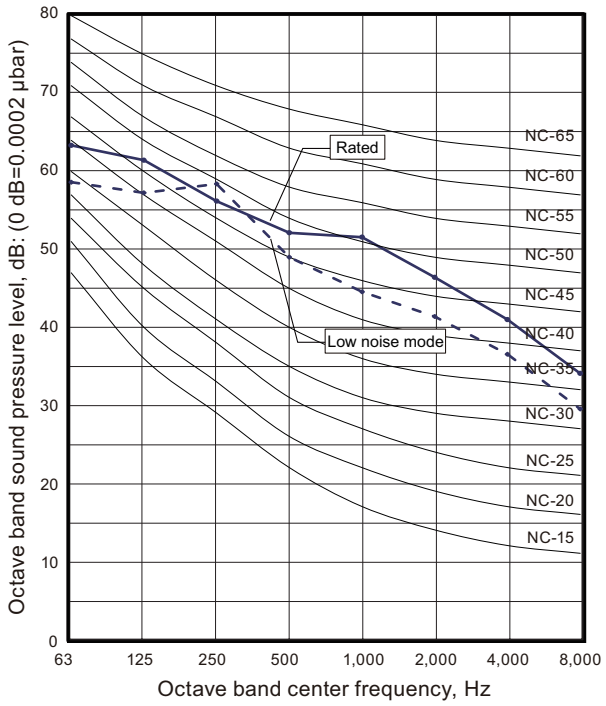

8-2. Sound level check point

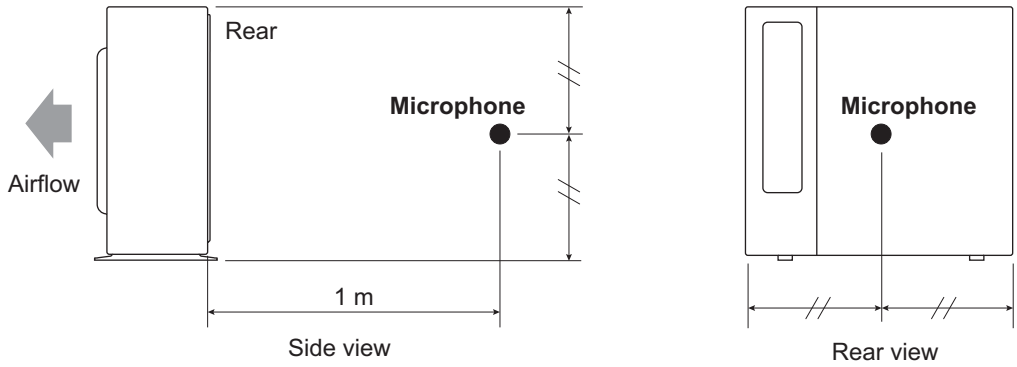

NOTE: Detailed shape of the actual outdoor unit might be slightly different from the one illustrated above.

OUTDOOR UNITS

9. Electrical characteristics

Select the breaker based on MCA of the following tables.
Select the wire diameter based on the larger value of MCA or TOCA of the following tables.
Select a wire diameter which withstands the breaker capacity.
Select the correct cable type and size according to the country or region's regulations.
Limited wiring length is in case voltage drop less than 2%. When wiring length extend longer, select the wiring size of larger diameter.

- RLA: Rated Load Amp of compressor under the standard condition
- MCA: Minimum Circuit Ampacity = Maximum operating current (Full load)
- MSC: Starting current (The maximum current during startup of the compressor)
- TOCA: Total Over-Current Ampacity
- MFA: Main Fuse (circuit breaker) Ampacity

OUTDOOR UNITS

9-1. Stand-alone

HP	Model name	Power supply	Full load characteristics		
			MCA (A)	TOCA (A)	MSC (A)
4	AJ∗040LCLDH	50 Hz, 230 V	27.7	29.5	28.4
5	AJ∗045LCLDH		27.7	29.5	28.4
6	AJ∗054LCLDH		29.7	31.5	30.4

HP	Model name	Wiring specifications			
		MFA (A)	Power cable (mm^2)	Earth cable (mm^2)	Limited wiring length (m)
4	AJ∗040LCLDH	32	6	4	18
5	AJ∗045LCLDH	32	6	4	18
6	AJ∗054LCLDH	32	6	4	18

HP	Model name	Compressor	Outdoor fan motor	
		RLA (A)	Output (W)	FLA (A)
4	AJ∗040LCLDH	24	111	0.51
5	AJ∗045LCLDH	24	111	0,51
6	AJ∗054LCLDH	26	111	0.51

10. Safety devices

Type of protection	Protection form		Model		
			AJ∗040LCLDH	AJ∗045LCLDH	AJ∗054LCLDH
Circuit protection	Fuse (Filter PCB)		AC 250 V, 5 A		
	Protector (Filter PCB)		AC 500 V, 45 A		
Compressor protector	Over current protection		—		
	Temperature protection	Activate	115 °C Compressor stop		
		Reset	80 °C Compressor restart		
High pressure protection		Activate	4.0 MPa Compressor stop		
		Reset	3.5 MPa Compressor restart		
Low pressure protection		Activate	0.05 MPa Compressor stop		
		Reset	—		
Fan motor thermal protector		Activate	115±15°C Fan motor stop		
		Reset	70 °C Fan motor restart		

OUTDOOR UNITS

11. Accessories

The following installation parts are supplied. Use them as required. Do not discard any accessories until the installation work has been completed.

11-1. Stand-alone

Name and shape	Q'ty	Application
Specifications manual	1	
Installation manual	1	
Drain cap	3	For outdoor unit drain piping work
Drain pipe	1	For outdoor unit drain piping work
Cable tie	2	For binding power cable and transmission cable

OUTDOOR UNITS

OUTDOOR UNITS

Refrigerant R410A

INVERTER

AIRSTAGE™

Variable Refrigerant Flow System

4. INDOOR UNITS

2022.04.22
DV_CH04_VR2E018EF_16

CONTENTS

4. INDOOR UNITS

1. Model lineup 04-1

2. Specifications 04-4

2-1. Compact cassette type 04-4
2-2. 4-way flow cassette type 04-6
2-3. Circular flow cassette type 04-9
2-4. 3D flow cassette type 04-13
2-5. One way flow cassette type 04-14
2-6. Low static pressure duct (Mini duct) type 04-16
2-7. Low static pressure duct (Slim duct)/Slim concealed floor type 04-18
2-8. Low static pressure duct type (High efficiency) 04-20
2-9. Medium static pressure duct type 04-21
2-10. High static pressure duct type 04-22
2-11. Compact floor type 04-23
2-12. Compact floor type (EEV external model) 04-25
2-13. Floor/Ceiling type 04-27
2-14. Ceiling type 04-28
2-15. Wall mounted type 04-29
2-16. Wall mounted type (EEV external model) 04-32

3. Electrical characteristics 04-34

4. Dimensions 04-36

4-1. Compact cassette type 04-36
4-2. 4-way flow cassette type 04-38
4-3. Circular flow cassette type 04-41
4-4. 3D flow cassette type 04-44
4-5. One way flow cassette type 04-46
4-6. Low static pressure duct (Mini duct) type 04-49
4-7. Low static pressure duct (Slim duct)/Slim concealed floor type 04-53
4-8. Low static pressure duct type (High efficiency) 04-58
4-9. Medium static pressure duct type 04-60
4-10. High static pressure duct type 04-62
4-11. Compact floor type 04-64
4-12. Floor/Ceiling type 04-66
4-13. Ceiling type 04-68
4-14. Wall mounted type 04-70

5. Wiring diagrams 04-76

5-1. Compact cassette type 04-76
5-2. 4-way flow cassette type 04-77
5-3. Circular flow cassette type 04-78
5-4. 3D flow cassette type 04-79
5-5. One way flow cassette type 04-80
5-6. Low static pressure duct (Mini duct) type 04-81

CONTENTS (continued)

5-7. Low static pressure duct (Slim duct)/Slim concealed floor type 04-82
5-8. Low static pressure duct type (High efficiency).....04-83
5-9. Medium static pressure duct type 04-84
5-10. High static pressure duct type 04-85
5-11. Compact floor type 04-87
5-12. Compact floor type (EEV external model).....04-88
5-13. Floor/Ceiling type.....04-89
5-14. Ceiling type.....04-90
5-15. Wall mounted type.....04-91
5-16. Wall mounted type (EEV external model).....04-94

6. Air velocity and temperature distributions 04-95

6-1. Compact cassette type 04-95
6-2. 4-way flow cassette type 04-109
6-3. Circular flow cassette type.....04-116
6-4. 3D flow cassette type 04-124
6-5. One way flow cassette type.....04-136
6-6. Low static pressure duct (Mini duct) type.....04-148
6-7. Low static pressure duct (Slim duct)/Slim concealed floor type 04-158
6-8. Compact floor type 04-170
6-9. Floor/Ceiling type.....04-174
6-10. Ceiling type.....04-180
6-11. Wall mounted type.....04-184

7. Fan performance curve.....04-193

7-1. Low static pressure duct (Mini duct) type.....04-193
7-2. Low static pressure duct (Slim duct)/Slim concealed floor type 04-207
7-3. Low static pressure duct type (High efficiency).....04-219
7-4. Medium static pressure duct type 04-223
7-5. High static pressure duct type 04-231
7-6. Fresh air characteristics.....04-234

8. Airflow 04-238

8-1. Compact cassette type 04-238
8-2. 4-way flow cassette type 04-239
8-3. Circular flow cassette type.....04-240
8-4. 3D flow cassette type 04-241
8-5. One way flow cassette type.....04-242
8-6. Low static pressure duct (Mini duct) type.....04-243
8-7. Low static pressure duct (Slim duct)/Slim concealed floor type 04-244
8-8. Low static pressure duct type (High efficiency).....04-245
8-9. Medium static pressure duct type 04-246
8-10. High static pressure duct type 04-247
8-11. Compact floor type 04-248
8-12. Compact floor type (EEV external model).....04-249
8-13. Floor/Ceiling type.....04-250
8-14. Ceiling type.....04-251

CONTENTS (continued)

8-15. Wall mounted type 04-252
8-16. Wall mounted type (EEV external model) 04-253

9. Noise level curve 04-254

9-1. Compact cassette type 04-254
9-2. 4-way flow cassette type 04-256
9-3. Circular flow cassette type 04-258
9-4. 3D flow cassette type 04-260
9-5. One way flow cassette type 04-261
9-6. Low static pressure duct (Mini duct) type 04-263
9-7. Low static pressure duct (Slim duct)/Slim concealed floor type 04-265
9-8. Low static pressure duct type (High efficiency) 04-267
9-9. Medium static pressure duct type 04-268
9-10. High static pressure duct type 04-269
9-11. Compact floor type 04-270
9-12. Compact floor type (EEV external model) 04-272
9-13. Floor/Ceiling type 04-274
9-14. Ceiling type 04-275
9-15. Wall mounted type 04-276
9-16. Wall mounted type (EEV external model) 04-279
9-17. Sound level check point 04-281

10. Safety devices 04-283

10-1.Compact cassette type 04-283
10-2.4-way flow cassette type 04-283
10-3.Circular flow cassette type 04-283
10-4.3D flow cassette type 04-284
10-5.One way flow cassette type 04-284
10-6.Low static pressure duct (Mini duct) type 04-284
10-7.Low static pressure duct (Slim duct)/Slim concealed floor type 04-284
10-8.Low static pressure duct type (High efficiency) 04-285
10-9.Medium static pressure duct type 04-285
10-10.High static pressure duct type 04-285
10-11.Compact floor type 04-285
10-12.Compact floor type (EEV external model) 04-286
10-13.Floor/Ceiling type 04-286
10-14.Ceiling type 04-286
10-15.Wall mounted type 04-286
10-16.Wall mounted type (EEV external model) 04-287

11. Standard accessories 04-288

11-1.Compact cassette type 04-288
11-2.4-way flow cassette type 04-289
11-3.Circular flow cassette type 04-290
11-4.3D flow cassette type 04-291
11-5.One way flow cassette type 04-292
11-6.Low static pressure duct (Mini duct) type 04-293

CONTENTS (continued)

11-7.Low static pressure duct (Slim duct)/Slim concealed floor type 04-294
11-8.Low static pressure duct type (High efficiency).....04-295
11-9.Medium static pressure duct type 04-296
11-10.High static pressure duct type 04-297
11-11.Compact floor type 04-298
11-12.Floor/Ceiling type.....04-299
11-13.Ceiling type.....04-301
11-14.Wall mounted type.....04-302

1. Model lineup

Type	Capacity															
kW	1.1	2.2	2.8	3.6	4.0/4.5	5.6	7.1	9.0	10.0	11.2	12.5	14.0	18.0	22.4	25.0	28.0
Model code	04	07	09	12	14	18	24	30	34	36	45	54	60	72	90	96
Compact cassette	•	•	•	•	•	•	•									
4-way flow cassette						•	•	•	•	•	•	•				
Circular flow cassette			•	•	•	•	•	•	•	•	•	•				
3D flow cassette						•	•									
One way flow cassette	•	•	•	•	•	•	•									
Low static pressure duct (Mini duct)	•	•	•	•	•	•	•									
Low static pressure duct (Slim duct) /Slim concealed floor		•	•	•	•	•	•									
Low static pressure duct (High efficiency)						•		•								
Medium static pressure duct							•	•		•	•					
High static pressure duct										•	•					
Compact floor	•	•	•	•	•											
Compact floor (EEV external) EV kit	•	•	•	•	•											
Floor/Ceiling				•	•	•	•									
Ceiling								•		•	•	•				
Wall mounted	•	•	•	•	•	•	•	•	•							
Wall mounted (EEV external) EV kit	•	•	•	•	•											

INDOOR UNITS

INDOOR UNITS

Type	Rated capacity (kW)		Model name	Dimensions	Remarks
	Cooling	Heating		H × W × D	
Compact cassette	1.1	1.3	AUXB004GLEH	245 × 570 × 570	Cassette grille: UTG-UF∗E-W UTG-UF∗C-W
	2.2	2.8	AUXB007GLEH		
	2.8	3.2	AUXB009GLEH		
	3.6	4.1	AUXB012GLEH		
	4.5	5.0	AUXB014GLEH		
	5.6	6.3	AUXB018GLEH		
	7.1	8.0	AUXB024GLEH		
4-way flow cassette	5.6	6.3	AUXD18GALH	246 × 840 × 840	Cassette grille: UTG-UG∗A-W
	7.1	8.0	AUXD24GALH		
	9.0	10.0	AUXA30GALH	288 × 840 × 840	
	10.0	11.2	AUXA34GALH		
	11.2	12.5	AUXA36GALH		
	12.5	14.0	AUXA45GALH		
	14.0	16.0	AUXA54GALH		
Circular flow cassette	2.8	3.2	AUXN009GLAH	246 × 840 × 840	Cassette grille: UTG-UK∗C-W UTG-UK∗A-B
	3.6	4.0	AUXN012GLAH		
	4.5	5.0	AUXN014GLAH		
	5.6	6.3	AUXM018GLEH		
	7.1	8.0	AUXM024GLEH		
	9.0	10.0	AUXM030GLEH		
	5.6	6.3	AUXK018GLEH	288 × 840 × 840	
	7.1	8.0	AUXK024GLEH		
	9.0	10.0	AUXK030GLEH		
	10.0	11.2	AUXK034GLEH		
	11.2	12.5	AUXK036GLEH		
	12.5	14.0	AUXK045GLEH		
	14.0	16.0	AUXK054GLEH		
3D flow cassette	5.6	6.3	AUXS018GLEH	200 × 1,240 × 500	Cassette grille: UTG-US∗A-W
	7.1	8.0	AUXS024GLEH		
One way flow cassette	1.1	1.3	AUXV004GLEH	198 × 785 × 570	Cassette grille: UTG-UN∗A-W
	2.2	2.8	AUXV007GLEH		
	2.8	3.2	AUXV009GLEH		
	3.6	4.0	AUXV012GLEH		
	4.5	5.0	AUXV014GLEH	198 × 1,190 × 570	Cassette grille: UTG-UN∗B-W
	5.6	6.3	AUXV018GLEH		
	7.1	8.0	AUXV024GLEH		
Low static pressure duct (Mini duct)	1.1	1.3	ARXK004GLGH	198 × 700 × 450	
	2.2	2.8	ARXK007GLGH		
	2.8	3.2	ARXK009GLGH		
	3.6	4.0	ARXK012GLGH		
	4.5	5.0	ARXK014GLGH		
	5.6	6.3	ARXK018GLGH	198 × 900 × 450	
	7.1	8.0	ARXK024GLGH	198 × 1,100 × 450	
Low static pressure duct (Slim duct) /Slim concealed floor	2.2	2.8	ARXD007GLEH	198 × 700 × 620	
	2.8	3.2	ARXD009GLEH		
	3.6	4.0	ARXD012GLEH		
	4.5	5.0	ARXD014GLEH		
	5.6	6.3	ARXD018GLEH	198 × 900 × 620	
	7.1	8.0	ARXD024GLEH	198 × 1,100 × 620	
Low static pressure duct (High efficiency)	5.6	6.3	ARXP018GLFH	270 × 1,135 × 700	
	9.0	10.0	ARXP030GLFH		

INDOOR UNITS

Type	Rated capacity (kW)		Model name	Dimensions	Remarks
	Cooling	Heating		H × W × D	
Medium static pressure duct	7.1	8.0	ARXA024GLEH	270 × 1,135 × 700	
	9.0	10.0	ARXA030GLEH		
	11.2	12.5	ARXA036GLEH		
	12.5	14.0	ARXA045GLEH		
High static pressure duct	11.2	12.5	ARXC036GTEH	400 × 1,050 × 500	
	12.5	14.0	ARXC045GTEH		
Compact floor	1.1	1.3	AG∗A004GCGH	600 × 740 × 200	
	2.2	2.8	AG∗A007GCGH		
	2.8	3.2	AG∗A009GCGH		
	3.6	4.0	AG∗A012GCGH		
	4.0	4.5	AG∗A014GCGH		
Compact floor (EEV external)	1.1	1.3	AG∗E004GCEH	600 × 740 × 200	EV kit: UTR-EV09XB
	2.2	2.8	AG∗E007GCEH		
	2.8	3.2	AG∗E009GCEH		
	3.6	4.0	AG∗E012GCEH		EV kit: UTR-EV14XB
	4.0	4.5	AG∗E014GCEH		
Floor/Ceiling	3.6	4.0	AB∗A012GTEH	199 × 990 × 655	
	4.5	5.0	AB∗A014GTEH		
	5.6	6.3	AB∗A018GTEH		
	7.1	8.0	AB∗A024GTEH		
Ceiling	9.0	10.0	AB∗A030GTEH	240 × 1,660 × 700	
	11.2	12.5	AB∗A036GTEH		
	12.5	14.0	AB∗A045GTEH		
	14.0	16.0	AB∗A054GTEH		
Wall mounted	1.1	1.3	AS∗A004GCGH	268 × 840 × 203	
	2.2	2.8	AS∗A007GCGH		
	2.8	3.2	AS∗A009GCGH		
	3.6	4.0	AS∗A012GCGH		
	4.0	4.5	AS∗A014GCGH		
	5.6	6.3	AS∗A18GBCH	320 × 998 × 238	
	7.1	8.0	AS∗A24GBCH		
	9.0	10.0	AS∗A030GTEH	340 × 1,150 × 280	
	10.0	11.2	AS∗A034GTEH		
Wall mounted (EEV external)	1.1	1.3	AS∗E004GCEH	268 × 840 × 203	EV kit: UTR-EV09XB
	2.2	2.8	AS∗E007GCEH		
	2.8	3.2	AS∗E009GCEH		
	3.6	4.0	AS∗E012GCEH		EV kit: UTR-EV14XB
	4.0	4.5	AS∗E014GCEH		

NOTES:

- For old models information, refer to the back number of this manual released before 2018 on our Pocket or Pocket Portal.
- Refer to the *DESIGN AND TECHNICAL MANUAL* for Air Handling Unit (AHU) regarding the contents of the AHU (e.g. AH∗A096GWAA).

INDOOR UNITS

2. Specifications

2-1. Compact cassette type

Model name				AUXB004GLEH	AUXB007GLEH	AUXB009GLEH
Power supply				230 V ~ 50 Hz		
Available voltage range				198—264 V		
Capacity	Cooling		kW	1.1	2.2	2.8
			Btu/h	3,800	7,500	9,600
	Heating		kW	1.3	2.8	3.2
			Btu/h	4,400	9,600	10,900
Input power			W	23	25	
Fan	Airflow rate	HIGH	m^3/h (l/s)	530/530*1 (147/147)	540 (150)	550 (153)
		MED—HIGH		490/480*1 (136/133)	500 (139)	520 (144)
		MED		450/430*1 (125/119)	460 (128)	480 (133)
		MED—LOW		420/380*1 (117/106)	420 (117)	440 (122)
		LOW		390/340*1 (108/94)	390 (108)	400 (111)
		QUIET		350/300*1 (97/83)	350 (97)	
	Type × Q'ty			Turbo × 1		
	Motor output		W	54		
Sound pressure level*2		HIGH	dB (A)	34/34*1	34	35
		MED—HIGH		32/31*1	32	33
		MED		30/29*1	30	31
		MED—LOW		28/26*1	28	29
		LOW		27/24*1	27	
		QUIET		25/21*1	25	
Heat exchanger type	Dimensions (H × W × D)		mm	210 × 1,310 × 13.3 210 × 1,250 × 13.3		
	Length			1,280		
	Fin pitch			1.2		
	Rows × Stages			2 × 10		
	Face area		m^2	0.27		
	Pipe type (Material)			Grooved H-pin (Copper)		
	Fin	Type (Material)		Slit (Aluminum)		
		Surface treatment		Hydrophilic coating		
Air filter	Net material			PP honeycomb		
Enclosure	Material			Galvanized sheet iron		
	Color			—		
Dimensions (H × W × D)	Net	Main body	mm	245 × 570 × 570		
	Gross			265 × 730 × 625		
Weight	Net		kg	14.5	15	
	Gross			18		
Connection pipe diameter	Liquid (Flare)		mm (in)	Ø 6.35 (Ø 1/4)		
	Gas (Flare)			Ø 9.52 (Ø 3/8)		
	Drain hose			VP25 I.D.: Ø 25 (1); O.D.: Ø 32 (1-1/4)		
Cassette grille (Grid type: Option)	Model name			UTG-UF∗E-W		
	Color			White Approximate color of Munsell 9PB 9.1/0.2		
	Dimensions (H × W × D)	Net	mm	50 × 620 × 620		
		Gross		120 × 765 × 755		
	Weight	Net	kg	2.3		
		Gross		4.5		
Cassette grille (Standard type: Option)	Model name			UTG-UF∗C-W		
	Color			White Approximate color of Munsell N9.25/		
	Dimensions (H × W × D)	Net	mm	50 × 700 × 700		
		Gross		120 × 765 × 755		
	Weight	Net	kg	2.6		
		Gross		4.5		

NOTES:

- Specifications are based on the following conditions:
  - Cooling: Indoor temperature of 27 °CDB/19 °CWB, and outdoor temperature of 35 °CDB/24 °CWB.
  - Heating: Indoor temperature of 20 °CDB/15 °CWB, and outdoor temperature of 7 °CDB/6 °CWB.
  - Pipe length: 7.5 m, Height difference: 0 m. (Between outdoor unit and indoor unit.)
- Protective function might work when using it outside the operation range.
- *1: This value is “Cooling operation/Heating operation”.
- *2: Sound pressure level:
  - Measured values in manufacturer’s anechoic chamber.
  - Because of the surrounding sound environment, the sound levels measured in actual installation conditions might be higher than the specified values here.

INDOOR UNITS

Model name				AUXB012GLEH	AUXB014GLEH	AUXB018GLEH	AUXB024GLEH
Power supply				230 V ~ 50 Hz			
Available voltage range				198—264 V			
Capacity	Cooling		kW	3.6	4.5	5.6	7.1
			Btu/h	12,300	15,400	19,100	24,200
	Heating		kW	4.1	5.0	6.3	8.0
			Btu/h	14,000	17,100	21,500	27,300
Input power			W	29	35	36	84
Fan	Airflow rate	HIGH	m^3/h (l/s)	600 (167)	680 (189)	710 (197)	1,030 (286)
		MED—HIGH		560 (156)	620 (172)	660 (183)	910 (253)
		MED		520 (144)	560 (156)	590 (164)	790 (219)
		MED—LOW		480 (133)	500 (139)	520 (144)	680 (189)
		LOW		430 (119)	440 (122)	460 (128)	560 (156)
		QUIET		390 (108)		400 (111)	450 (125)
	Type × Q'ty			Turbo × 1			
	Motor output		W	54			
Sound pressure level*		HIGH	dB (A)	37	38	41	50
		MED—HIGH		34	37	39	46
		MED		33	34	36	43
		MED—LOW		31	32	33	39
		LOW		29	30		35
		QUIET		27			30
Heat exchanger type	Dimensions (H × W × D)		mm	210 × 1,310 × 13.3 210 × 1,250 × 13.3		210 × 1,360 × 13.3 210 × 1,295 × 13.3 210 × 1,235 × 13.3	
	Length			1,280		1,295	
	Fin pitch			1.2		1.3	
	Rows × Stages			2 × 10		3 × 10	
	Face area		m^2	0.27		0.28	
	Pipe type (Material)			Grooved H-pin (Copper)			
	Fin	Type		Slit (Aluminum)			
		Surface treatment		Hydrophilic coating			
Air filter	Net material			PP honeycomb			
Enclosure	Material			Galvanized sheet iron			
	Color			—			
Dimensions (H × W × D)	Net	Main body	mm	245 × 570 × 570			
	Gross			265 × 730 × 625			
Weight	Net		kg	15		17	
	Gross			19		20	
Connection pipe diameter	Liquid (Flare)		mm (in)	Ø 6.35 (Ø 1/4)			Ø 9.52 (Ø 3/8)
	Gas (Flare)			Ø 12.70 (Ø 1/2)			Ø 15.88 (Ø 5/8)
	Drain hose			VP25 I.D.: Ø 25 (1); O.D.: Ø 32 (1-1/4)			
Cassette grille (Grid type: Option)	Model name			UTG-UF∗E-W			
	Color			White Approximate color of Munsell 9PB 9.1/0.2			
	Dimensions (H × W × D)	Net	mm	50 × 620 × 620			
		Gross		120 × 765 × 755			
	Weight	Net	kg	2.3			
		Gross		4.5			
Cassette grille (Standard type: Option)	Model name			UTG-UF∗C-W			
	Color			White Approximate color of Munsell N9.25/			
	Dimensions (H × W × D)	Net	mm	50 × 700 × 700			
		Gross		120 × 765 × 755			
	Weight	Net	kg	2.6			
		Gross		4.5			

NOTES:

- Specifications are based on the following conditions:
  - Cooling: Indoor temperature of 27 °CDB/19 °CWB, and outdoor temperature of 35 °CDB/24 °CWB.
  - Heating: Indoor temperature of 20 °CDB/15 °CWB, and outdoor temperature of 7 °CDB/6 °CWB.
  - Pipe length: 7.5 m, Height difference: 0 m. (Between outdoor unit and indoor unit.)
- Protective function might work when using it outside the operation range.
- *: Sound pressure level:
  - Measured values in manufacturer's anechoic chamber.
  - Because of the surrounding sound environment, the sound levels measured in actual installation conditions might be higher than the specified values here.

INDOOR UNITS

2-2. 4-way flow cassette type

Model name				AUXD18GALH	AUXD24GALH
Power supply				230 V ~ 50 Hz	
Available voltage range				198—264 V	
Capacity	Cooling		kW	5.6	7.1
			Btu/h	19,100	24,200
	Heating		kW	6.3	8.0
			Btu/h	21,500	27,300
Input power			W	39	46
Fan	Airflow rate	HIGH	m^3/h (l/s)	1,150 (319)	1,280 (356)
		MED		940 (261)	1,040 (289)
		LOW		870 (242)	
	Type × Q'ty			Turbo × 1	
	Motor output		W	80	
Sound pressure level*		HIGH	dB (A)	36	38
		MED		30	33
		LOW		29	
Heat exchanger type	Dimensions (H × W × D)		mm	210 × 2,087 × 13.3 210 × 2,021 × 13.3	
	Length			2,054	
	Fin pitch			1.2	
	Rows × Stages			2 × 10	
	Face area		m^2	0.42	
	Pipe type (Material)			Grooved H-pin (Copper)	
	Fin	Type		Slit (Aluminum)	
		Surface treatment		Hydrophilic coating	
Air filter	Type			Anti-mold	
	Net material			PP honeycomb	
Enclosure	Material			Galvanized sheet iron	
	Color			—	
Dimensions (H × W × D)	Net	Main body	mm	246 × 840 × 840	
	Gross			318 × 960 × 980	
Weight	Net		kg	22	
	Gross			27	
Connection pipe diameter	Liquid (Flare)		mm (in)	Ø 9.52 (Ø 3/8)	
	Gas (Flare)			Ø 15.88 (Ø 5/8)	
	Drain hose			VP25 I.D.: Ø 25 (1); O.D.: Ø 32 (1-1/4)	
Cassette grille (Option)	Model name			UTG-UG∗A-W	
	Color			White Approximate color of Munsell N9.25/	
	Dimensions (H × W × D)	Net	mm	50 × 950 × 950	
		Gross		115 × 1,020 × 1,000	
	Weight	Net	kg	5.5	
		Gross		8.5	

NOTES:

- Specifications are based on the following conditions:
  - Cooling: Indoor temperature of 27 °CDB/19 °CWB, and outdoor temperature of 35 °CDB/24 °CWB.
  - Heating: Indoor temperature of 20 °CDB/15 °CWB, and outdoor temperature of 7 °CDB/6 °CWB.
  - Pipe length: 7.5 m, Height difference: 0 m. (Between outdoor unit and indoor unit.)
- Protective function might work when using it outside the operation range.
- *: Sound pressure level:
  - Measured values in manufacturer's anechoic chamber.
  - Because of the surrounding sound environment, the sound levels measured in actual installation conditions might be higher than the specified values here.

INDOOR UNITS

Model name				AUXA30GALH	AUXA34GALH
Power supply				230 V ~ 50 Hz	
Available voltage range				198—264 V	
Capacity	Cooling		kW	9.0	10.0
			Btu/h	30,700	34,100
	Heating		kW	10.0	11.2
			Btu/h	34,100	38,200
Input power			W	59	77
Fan	Airflow rate	HIGH	m^3/h (l/s)	1,600 (444)	1,750 (486)
		MED		1,300 (361)	
		LOW		1,100 (306)	
	Type × Q'ty			Turbo × 1	
	Motor output		W	80	
Sound pressure level*		HIGH	dB (A)	40	43
		MED		38	
		LOW		33	
Heat exchanger type	Dimensions (H × W × D)		mm	252 × 2,153 × 13.3 252 × 2,087 × 13.3 252 × 2,021 × 13.3	
	Length			2,087	
	Fin pitch			1.3	
	Rows × Stages			3 × 12	
	Face area		m^2	0.52	
	Pipe type (Material)			Grooved H-pin (Copper)	
	Fin	Type		Slit (Aluminum)	
		Surface treatment		Hydrophilic coating	
Air filter	Type			Anti-mold	
	Net material			PP honeycomb	
Enclosure	Material			Galvanized sheet iron	
	Color			—	
Dimensions (H × W × D)	Net	Main body	mm	288 × 840 × 840	
	Gross			360 × 960 × 985	
Weight	Net		kg	27	
	Gross			33	
Connection pipe diameter	Liquid (Flare)		mm (in)	Ø 9.52 (Ø 3/8)	
	Gas (Flare)			Ø 15.88 (Ø 5/8)	
	Drain hose			VP25 I.D.: Ø 25 (1); O.D.: Ø 32 (1-1/4)	
Cassette grille (Option)	Model name			UTG-UG∗A-W	
	Color			White Approximate color of Munsell N9.25/	
	Dimensions (H × W × D)	Net	mm	50 × 950 × 950	
		Gross		115 × 1,020 × 1,000	
	Weight	Net	kg	5.5	
		Gross		8.5	

NOTES:

- Specifications are based on the following conditions:
  - Cooling: Indoor temperature of 27 °CDB/19 °CWB, and outdoor temperature of 35 °CDB/24 °CWB.
  - Heating: Indoor temperature of 20 °CDB/15 °CWB, and outdoor temperature of 7 °CDB/6 °CWB.
  - Pipe length: 7.5 m, Height difference: 0 m. (Between outdoor unit and indoor unit.)
- Protective function might work when using it outside the operation range.
- *: Sound pressure level:
  - Measured values in manufacturer's anechoic chamber.
  - Because of the surrounding sound environment, the sound levels measured in actual installation conditions might be higher than the specified values here.

INDOOR UNITS

Model name				AUXA36GALH	AUXA45GALH	AUXA54GALH
Power supply				230 V ~ 50 Hz		
Available voltage range				198—264 V		
Capacity	Cooling		kW	11.2	12.5	14.0
			Btu/h	38,200	42,600	47,700
	Heating		kW	12.5	14.0	16.0
			Btu/h	42,700	47,800	54,600
Input power			W	80	99	119
Fan	Airflow rate	HIGH	m^3/h (l/s)	1,800 (500)	1,900 (528)	2,000 (556)
		MED		1,300 (361)	1,370 (381)	
		LOW		1,100 (306)		
	Type × Q'ty			Turbo × 1		
	Motor output		W	80		
Sound pressure level*		HIGH	dB (A)	44	46	47
		MED		38	39	
		LOW		33		
Heat exchanger type	Length		mm	2,087		
	Fin pitch			1.3		
	Rows × Stages			3 × 12		
	Face area		m^2	0.52		
	Pipe type (Material)			Grooved H-pin (Copper)		
	Fin	Type		Slit (Aluminum)		
		Surface treatment		Hydrophilic coating		
Air filter	Type			Anti-mold		
	Net material			PP honeycomb		
Enclosure	Material			Galvanized sheet iron		
	Color			—		
Dimensions (H × W × D)	Net	Main body	mm	288 × 840 × 840		
	Gross			360 × 960 × 985		
Weight	Net		kg	27		
	Gross			33		
Connection pipe diameter	Liquid (Flare)		mm (in)	Ø 9.52 (Ø 3/8)		
	Gas (Flare)			Ø 19.05 (Ø 3/4)		
	Drain hose			VP25 I.D.: Ø 25 (1); O.D.: Ø 32 (1-1/4)		
Cassette grille (Option)	Model name			UTG-UG∗A-W		
	Color			White Approximate color of Munsell N9.25/		
	Dimensions (H × W × D)	Net	mm	50 × 950 × 950		
		Gross		115 × 1,020 × 1,000		
	Weight	Net	kg	5.5		
		Gross		8.5		

NOTES:

- Specifications are based on the following conditions:
  - Cooling: Indoor temperature of 27 °CDB/19 °CWB, and outdoor temperature of 35 °CDB/24 °CWB.
  - Heating: Indoor temperature of 20 °CDB/15 °CWB, and outdoor temperature of 7 °CDB/6 °CWB.
  - Pipe length: 7.5 m, Height difference: 0 m. (Between outdoor unit and indoor unit.)
- Protective function might work when using it outside the operation range.
- *: Sound pressure level:
  - Measured values in manufacturer's anechoic chamber.
  - Because of the surrounding sound environment, the sound levels measured in actual installation conditions might be higher than the specified values here.

INDOOR UNITS

2-3. Circular flow cassette type

Model name				AUXN009GLAH	AUXN012GLAH	AUXN014GLAH
Power supply				230 V ~ 50 Hz		
Available voltage range				198—264 V		
Capacity	Cooling		kW	2.8	3.6	4.5
			Btu/h	9,500	12,200	15,300
	Heating		kW	3.2	4.0	5.0
			Btu/h	10,900	13,600	17,000
Input power			W	20		
Fan	Airflow rate	HIGH	m^3/h (l/s)	1,050 (292)		
		MED—HIGH		930 (258)		
		MED		900 (250)		
		MED—LOW		870 (242)		
		LOW		810 (225)		
		QUIET		780 (217)		
	Type × Q'ty			Turbo × 1		
	Motor output		W	81		
Sound pressure level*		HIGH	dB (A)	33		
		MED—HIGH		32		
		MED		31		
		MED—LOW		30		
		LOW		29		
		QUIET		28		
Heat exchanger type	Dimensions (H × W × D)		mm	210 × 2,127 × 13.3 210 × 2,061 × 13.3		
	Length			2,094		
	Fin pitch			1.2		
	Rows × Stages			2 × 10		
	Pipe type (Material)			Grooved H-pin (Copper)		
	Fin	Type (Material)		Slit (Aluminum)		
		Surface treatment		Hydrophilic coating		
Air filter	Net material			PP honeycomb		
Enclosure	Material			Galvanized sheet iron		
	Color			—		
Dimensions (H × W × D)	Net	Main body	mm	246 × 840 × 840		
	Gross			298 × 960 × 950		
Weight	Net		kg	24.5		
	Gross			29.5		
Connection pipe diameter	Liquid (Flare)		mm (in)	Ø 6.35 (Ø 1/4)		
	Gas (Flare)			Ø 12.70 (Ø 1/2)		
	Drain hose			VP25 I.D.: Ø 25 (1); O.D.: Ø 32 (1-1/4)		
Cassette grille (Option)	Material			PS		
	Color			UTG-UK∗C-W: White Approximate color of Munsell N9.25/		
				UTG-UK∗A-B: Black Approximate color of Munsell N2/		
	Dimensions (H × W × D)	Net	mm	53 × 950 × 950		
		Gross		110 × 1,000 × 1,010		
	Weight	Net	kg	6.0		
		Gross		10.0		

NOTES:

- Specifications are based on the following conditions:
  - Cooling: Indoor temperature of 27 °CDB/19 °CWB, and outdoor temperature of 35 °CDB/24 °CWB.
  - Heating: Indoor temperature of 20 °CDB/15 °CWB, and outdoor temperature of 7 °CDB/6 °CWB.
  - Pipe length: 7.5 m, Height difference: 0 m. (Between outdoor unit and indoor unit.)
- Protective function might work when using it outside the operation range.
- *: Sound pressure level:
  - Measured values in manufacturer's anechoic chamber.
  - Because of the surrounding sound environment, the sound levels measured in actual installation conditions might be higher than the specified values here.

INDOOR UNITS

Model name				AUXM018GLEH	AUXM024GLEH	AUXM030GLEH
Power supply				230 V ~ 50 Hz		
Available voltage range				198—264 V		
Capacity	Cooling		kW	5.6	7.1	9.0
			Btu/h	19,100	24,200	30,700
	Heating		kW	6.3	8.0	10.0
			Btu/h	21,500	27,300	34,100
Input power			W	20	25	49
Fan	Airflow rate	HIGH	m^3/h (l/s)	1,050 (292)	1,120 (311)	1,470 (408)
		MED—HIGH		930 (258)	1,050 (292)	1,160 (322)
		MED		900 (250)	930 (258)	1,070 (297)
		MED—LOW		870 (242)	900 (250)	930 (258)
		LOW		810 (225)	870 (242)	900 (250)
		QUIET		780 (217)		
	Type × Q'ty			Turbo × 1		
	Motor output		W	81		
Sound pressure level*		HIGH	dB (A)	33	35	40
		MED—HIGH		32	33	36
		MED		31	32	34
		MED—LOW		30	31	32
		LOW		29	30	31
		QUIET		28	28	28
Heat exchanger type	Dimensions (H × W × D)		mm	210 × 2,127 × 13.3 210 × 2,061 × 13.3		
	Length			2,094		
	Fin pitch			1.2		
	Rows × Stages			2 × 10		
	Pipe type (Material)			Grooved H-pin (Copper)		
	Fin	Type		Slit (Aluminum)		
		Surface treatment		Hydrophilic coating		
Air filter	Net material			PP honeycomb		
Enclosure	Material			Galvanized sheet iron		
	Color			—		
Dimensions (H × W × D)	Net	Main body	mm	246 × 840 × 840		
	Gross			298 × 960 × 950		
Weight	Net		kg	24.0	24.5	
	Gross			29.0	29.5	
Connection pipe diameter	Liquid (Flare)		mm (in)	Ø 6.35 (Ø 1/4)	Ø 9.52 (Ø 3/8)	
	Gas (Flare)			Ø 12.70 (Ø 1/2)	Ø 15.88 (Ø 5/8)	
	Drain hose			VP25 I.D.: Ø 25 (1); O.D.: Ø 32 (1-1/4)		
Cassette grille (Option)	Material			PS		
	Color			UTG-UK∗C-W: White Approximate color of Munsell N9.25/		
				UTG-UK∗A-B: Black Approximate color of Munsell N2/		
	Dimensions (H × W × D)	Net	mm	53 × 950 × 950		
		Gross		110 × 1,000 × 1,010		
	Weight	Net	kg	6.0		
		Gross		10.0		

NOTES:

- Specifications are based on the following conditions:
  - Cooling: Indoor temperature of 27 °CDB/19 °CWB, and outdoor temperature of 35 °CDB/24 °CWB.
  - Heating: Indoor temperature of 20 °CDB/15 °CWB, and outdoor temperature of 7 °CDB/6 °CWB.
  - Pipe length: 7.5 m, Height difference: 0 m. (Between outdoor unit and indoor unit.)
- Protective function might work when using it outside the operation range.
- *: Sound pressure level:
  - Measured values in manufacturer's anechoic chamber.
  - Because of the surrounding sound environment, the sound levels measured in actual installation conditions might be higher than the specified values here.

INDOOR UNITS

Model name				AUXK018GLEH	AUXK024GLEH	AUXK030GLEH	AUXK034GLEH
Power supply				230 V ~ 50 Hz			
Available voltage range				198—264 V			
Capacity	Cooling		kW	5.6	7.1	9.0	10.0
			Btu/h	19,100	24,200	30,700	34,100
	Heating		kW	6.3	8.0	10.0	11.2
			Btu/h	21,500	27,300	34,100	38,200
Input power			W	40		47	
Fan	Airflow rate	HIGH	m^3/h (l/s)	1,420 (394)		1,440 (400)	
		MED—HIGH		1,360 (378)		1,400 (389)	
		MED		1,300 (361)		1,340 (372)	
		MED—LOW		1,270 (353)		1,300 (361)	
		LOW		1,200 (333)		1,280 (356)	
		QUIET		1,150 (319)			
	Type × Q'ty			Turbo × 1			
	Motor output		W	81			
Sound pressure level*		HIGH	dB (A)	38		39	
		MED—HIGH		37		38	
		MED		36		37	
		MED—LOW		35		36	
		LOW		34		35	
		QUIET		33			
Heat exchanger type	Dimensions (H × W × D)		mm	252 × 2,127 × 13.3 252 × 2,061 × 13.3		252 × 2,124 × 13.3 252 × 2,062 × 13.3 252 × 1,999 × 13.3	
	Length			2,094		2,062	
	Fin pitch			1.2		1.3	
	Rows × Stages			2 × 12		3 × 12	
	Pipe type (Material)			Grooved H-pin (Copper)			
	Fin	Type		Slit (Aluminum)			
		Surface treatment		Hydrophilic coating			
Air filter	Net material			PP honeycomb			
Enclosure	Material			Galvanized sheet iron			
	Color			—			
Dimensions (H × W × D)	Net	Main body	mm	288 × 840 × 840			
	Gross			340 × 960 × 950			
Weight	Net		kg	26.5		29.5	
	Gross			31.5		34.0	
Connection pipe diameter	Liquid (Flare)		mm (in)	Ø 6.35 (Ø 1/4)	Ø 9.52 (Ø 3/8)		
	Gas (Flare)			Ø 12.70 (Ø 1/2)	Ø 15.88 (Ø 5/8)		
	Drain hose			VP25 I.D.: Ø 25 (1); O.D.: Ø 32 (1-1/4)			
Cassette grille (Option)	Material			PS			
	Color			UTG-UK∗C-W: White Approximate color of Munsell N9.25/			
				UTG-UK∗A-B: Black Approximate color of Munsell N2/			
	Dimensions (H × W × D)	Net	mm	53 × 950 × 950			
		Gross		110 × 1,000 × 1,010			
	Weight	Net	kg	6.0			
		Gross		10.0			

NOTES:

- Specifications are based on the following conditions:
  - Cooling: Indoor temperature of 27 °CDB/19 °CWB, and outdoor temperature of 35 °CDB/24 °CWB.
  - Heating: Indoor temperature of 20 °CDB/15 °CWB, and outdoor temperature of 7 °CDB/6 °CWB.
  - Pipe length: 7.5 m, Height difference: 0 m. (Between outdoor unit and indoor unit.)
- Protective function might work when using it outside the operation range.
- *: Sound pressure level:
  - Measured values in manufacturer's anechoic chamber.
  - Because of the surrounding sound environment, the sound levels measured in actual installation conditions might be higher than the specified values here.

INDOOR UNITS

Model name				AUXK036GLEH	AUXK045GLEH	AUXK054GLEH
Power supply				230 V ~ 50 Hz		
Available voltage range				198—264 V		
Capacity	Cooling		kW	11.2	12.5	14.0
			Btu/h	38,200	42,700	47,800
	Heating		kW	12.5	14.0	16.0
			Btu/h	42,700	47,800	54,600
Input power			W	61	89	116
Fan	Airflow rate	HIGH	m^3/h (l/s)	1,620 (450)	1,820 (506)	2,040 (567)
		MED—HIGH		1,500 (417)	1,590 (442)	1,800 (500)
		MED		1,400 (389)	1,500 (417)	1,590 (442)
		MED—LOW		1,340 (372)	1,400 (389)	1,440 (400)
		LOW		1,280 (356)	1,300 (361)	
		QUIET		1,150 (319)		
	Type × Q'ty			Turbo × 1		
	Motor output		W	81		
Sound pressure level*		HIGH	dB (A)	41	44	47
		MED—HIGH		40	42	45
		MED		38	40	42
		MED—LOW		37	38	39
		LOW		35	36	
		QUIET		33		
Heat exchanger type	Dimensions (H × W × D)		mm	252 × 2,124 × 13.3 252 × 2,062 × 13.3 252 × 1,999 × 13.3		
	Length			2,062		
	Fin pitch			1.3		
	Rows × Stages			3 × 12		
	Pipe type (Material)			Grooved H-pin (Copper)		
	Fin	Type		Slit (Aluminum)		
		Surface treatment		Hydrophilic coating		
Air filter	Net material			PP honeycomb		
Enclosure	Material			Galvanized sheet iron		
	Color			—		
Dimensions (H × W × D)	Net	Main body	mm	288 × 840 × 840		
	Gross			340 × 960 × 950		
Weight	Net		kg	29.5		
	Gross			34		
Connection pipe diameter	Liquid (Flare)		mm (in)	Ø 9.52 (Ø 3/8)		
	Gas (Flare)			Ø 15.88 (Ø 5/8)		
	Drain hose			VP25 I.D.: Ø 25 (1); O.D.: Ø 32 (1-1/4)		
Cassette grille (Option)	Material			PS		
	Color			UTG-UK∗C-W: White Approximate color of Munsell N9.25/		
				UTG-UK∗A-B: Black Approximate color of Munsell N2/		
	Dimensions (H × W × D)	Net	mm	53 × 950 × 950		
		Gross		110 × 1,000 × 1,010		
	Weight	Net	kg	6.0		
		Gross		10.0		

NOTES:

- Specifications are based on the following conditions:
  - Cooling: Indoor temperature of 27 °CDB/19 °CWB, and outdoor temperature of 35 °CDB/24 °CWB.
  - Heating: Indoor temperature of 20 °CDB/15 °CWB, and outdoor temperature of 7 °CDB/6 °CWB.
  - Pipe length: 7.5 m, Height difference: 0 m. (Between outdoor unit and indoor unit.)
- Protective function might work when using it outside the operation range.
- *: Sound pressure level:
  - Measured values in manufacturer's anechoic chamber.
  - Because of the surrounding sound environment, the sound levels measured in actual installation conditions might be higher than the specified values here.

INDOOR UNITS

2-4. 3D flow cassette type

Model name				AUXS018GLEH	AUXS024GLEH
Power supply				230 V ~ 50 Hz	
Available voltage range				198—264 V	
Capacity	Cooling		kW	5.60	7.10
			Btu/h	19,100	24,200
	Heating		kW	6.30	8.00
			Btu/h	21,500	27,300
Input power*1			W	20/28	34/43
Fan	Airflow rate*1	HIGH	m^3/h (l/s)	750/870 (208/242)	950/1,040 (264/289)
		MED—HIGH		710/830 (197/231)	890/990 (247/275)
		MED		690/780 (192/217)	860/930 (239/258)
		MED—LOW		660/740 (183/206)	810/880 (225/244)
		LOW		630/700 (175/194)	770/840 (214/233)
		QUIET		540/540 (150/150)	540/540 (150/150)
	Type × Q'ty			Sirocco × 4	
	Motor output		W	80	
Sound pressure level*1*2		HIGH	dB (A)	38/41	43/46
		MED—HIGH		36/40	42/45
		MED		35/39	41/43
		MED—LOW		35/37	40/42
		LOW		33/36	38/40
		QUIET		29/29	29/29
Heat exchanger type	Dimensions (H × W × D)		mm	160 × 1,045 × 60	
	Length			1,045	
	Fin pitch			1.20	
	Rows × Stages			6 × 10	
	Face area		m^2	0.33	
	Pipe type (Material)			Grooved H-pin (Copper)	
	Fin	Type (Material)		Slit (Aluminum)	
		Surface treatment		Hydrophilic coating	
Air filter	Net material			PP honeycomb	
Enclosure	Material			Galvanized sheet iron	
	Color			—	
Dimensions (H × W × D)	Net	Main body	mm	200 × 1,240 × 500	
	Gross			305 × 1,530 × 695	
Weight	Net		kg	25.0	
	Gross			34.0	
Connection pipe diameter	Liquid (Flare)		mm (in)	Ø 6.35 (Ø 1/4)	Ø 9.52 (Ø 3/8)
	Gas (Flare)			Ø 12.70 (Ø 1/2)	Ø 15.88 (Ø 5/8)
	Drain hose			VP25 I.D.: Ø 25 (1); O.D.: Ø 32 (1-1/4)	
Cassette grille (Option)	Model name			UTG-US∗A-W	
	Color			White Approximate color of Munsell 10N08	
	Dimensions (H × W × D)	Net	mm	85 × 1,350 × 580	
		Gross		205 × 1,440 × 703	
	Weight	Net	kg	11.5	
		Gross		18.0	

NOTES:

- Specifications are based on the following conditions:
  - Cooling: Indoor temperature of 27 °CDB/19 °CWB, and outdoor temperature of 35 °CDB/24 °CWB.
  - Heating: Indoor temperature of 20 °CDB/15 °CWB, and outdoor temperature of 7 °CDB/6 °CWB.
  - Pipe length: 7.5 m, Height difference: 0 m. (Between outdoor unit and indoor unit.)
- Protective function might work when using it outside the operation range.
- *1: This value is “Cooling operation/Heating operation”.
- *2: Sound pressure level:
  - Measured values in manufacturer’s anechoic chamber.
  - Because of the surrounding sound environment, the sound levels measured in actual installation conditions might be higher than the specified values here.

INDOOR UNITS

INDOOR UNITS

2-5. One way flow cassette type

Model name				AUXV004GLEH	AUXV007GLEH	AUXV009GLEH	AUXV012GLEH
Power supply				230 V ~ 50 Hz			
Available voltage range				198—264 V			
Capacity	Cooling		kW	1.1	2.2	2.8	3.6
			Btu/h	3,800	7,500	9,600	12,300
	Heating		kW	1.3	2.8	3.2	4.0
			Btu/h	4,400	9,600	10,900	13,600
Input power			W	30	42		60
Fan	Airflow rate	HIGH	m^3/h (l/s)	460 (128)	550 (153)		670 (186)
		MED—HIGH		440 (122)	440 (122)		520 (144)
		MED		420 (117)	420 (117)		480 (133)
		MED—LOW		400 (111)	400 (111)		450 (125)
		LOW		380 (106)	380 (106)		410 (114)
		QUIET		360 (100)	360 (100)		360 (100)
	Type × Q'ty			Sirocco × 2			
	Motor output		W	80			
Sound pressure level*		HIGH	dB (A)	38	42		45
		MED—HIGH		37	37		41
		MED		36	36		39
		MED—LOW		35	35		38
		LOW		33	33		36
		QUIET		32	32		32
Heat exchanger type	Dimensions (H × W × D)		mm	336 × 490 × 13.3	336 × 490 × 26.6		
	Length			490			
	Fin pitch			1.3			
	Rows × Stages			1 × 16	2 × 16		
	Pipe type (Material)			Grooved H-pin (Copper)			
	Fin	Type		Slit (Aluminum)			
		Surface treatment		Hydrophilic coating			
Air filter	Net material			PP honeycomb			
Enclosure	Material			Galvanized sheet iron			
	Color			—			
Dimensions (H × W × D)	Net	Main body	mm	198 × 785 × 570			
	Gross			305 × 1,135 × 695			
Weight	Net		kg	18	19		
	Gross			26	27		
Connection pipe diameter	Liquid (Flare)		mm (in)	Ø 6.35 (Ø 1/4)			Ø 6.35 (Ø 1/4)
	Gas (Flare)			Ø 9.52 (Ø 3/8)			Ø 12.70 (Ø 1/2)
	Drain hose			VP25 I.D.: Ø 25 (1); O.D.: Ø 32 (1-1/4)			
Cassette grille (Option)	Model name			UTG-UN∗A-W			
	Color			White Approximate color of Munsell N9.25/			
	Dimensions (H × W × D)	Net	mm	43 × 950 × 620			
		Gross		150 × 1,090 × 735			
	Weight	Net	kg	6.5			
		Gross		11			

NOTES:

- Specifications are based on the following conditions:
  - Cooling: Indoor temperature of 27 °CDB/19 °CWB, and outdoor temperature of 35 °CDB/24 °CWB.
  - Heating: Indoor temperature of 20 °CDB/15 °CWB, and outdoor temperature of 7 °CDB/6 °CWB.
  - Pipe length: 7.5 m, Height difference: 0 m. (Between outdoor unit and indoor unit.)
- Protective function might work when using it outside the operation range.
- *: Sound pressure level:
  - Measured values in manufacturer's anechoic chamber.
  - Because of the surrounding sound environment, the sound levels measured in actual installation conditions might be higher than the specified values here.

INDOOR UNITS

Model name				AUXV014GLEH	AUXV018GLEH	AUXV024GLEH
Power supply				230 V ~ 50 Hz		
Available voltage range				198—264 V		
Capacity	Cooling		kW	4.5	5.6	7.1
			Btu/h	15,400	19,100	24,200
	Heating		kW	5.0	6.3	8.0
			Btu/h	17,100	21,500	27,300
Input power			W	38	56	99
Fan	Airflow rate	HIGH	m^3/h (l/s)	720 (200)	890 (247)	1,150 (319)
		MED—HIGH		660 (183)	840 (233)	1,020 (283)
		MED		630 (175)	770 (214)	940 (261)
		MED—LOW		600 (167)	710 (197)	790 (219)
		LOW		580 (161)	660 (183)	700 (194)
		QUIET		550 (153)	580 (161)	610 (169)
	Type × Q'ty			Sirocco × 4		
	Motor output		W	80		
Sound pressure level*		HIGH	dB (A)	37	44	49
		MED—HIGH		36	43	47
		MED		35	40	45
		MED—LOW		34	38	42
		LOW		33	36	39
		QUIET		32	34	36
Heat exchanger type	Dimensions (H × W × D)		mm	336 × 890 × 26.6		336 × 890 × 26.6 126 × 890 × 13.3
	Length			890		
	Fin pitch			1.3		1.3, 1.45
	Rows × Stages			2 × 16		2 × 16, 1 × 6
	Pipe type (Material)			Grooved H-pin (Copper)		
	Fin	Type		Slit (Aluminum)		
		Surface treatment		Hydrophilic coating		
Air filter	Net material			PP honeycomb		
Enclosure	Material			Galvanized sheet iron		
	Color			—		
Dimensions (H × W × D)	Net	Main body	mm	198 × 1,190 × 570		
	Gross			305 × 1,530 × 695		
Weight	Net		kg	26		27
	Gross			36		
Connection pipe diameter	Liquid (Flare)		mm (in)	Ø 6.35 (Ø 1/4)		Ø 9.52 (Ø 3/8)
	Gas (Flare)			Ø 12.70 (Ø 1/2)		Ø 15.88 (Ø 5/8)
	Drain hose			VP25 I.D.: Ø 25 (1); O.D.: Ø 32 (1-1/4)		
Cassette grille (Option)	Model name			UTG-UN∗B-W		
	Color			White Approximate color of Munsell N9.25/		
	Dimensions (H × W × D)	Net	mm	43 × 1,360 × 620		
		Gross		150 × 1,495 × 735		
	Weight	Net	kg	8.5		
		Gross		14		

NOTES:

- Specifications are based on the following conditions:
  - Cooling: Indoor temperature of 27 °CDB/19 °CWB, and outdoor temperature of 35 °CDB/24 °CWB.
  - Heating: Indoor temperature of 20 °CDB/15 °CWB, and outdoor temperature of 7 °CDB/6 °CWB.
  - Pipe length: 7.5 m, Height difference: 0 m. (Between outdoor unit and indoor unit.)
- Protective function might work when using it outside the operation range.
- *: Sound pressure level:
  - Measured values in manufacturer's anechoic chamber.
  - Because of the surrounding sound environment, the sound levels measured in actual installation conditions might be higher than the specified values here.

INDOOR UNITS

2-6. Low static pressure duct (Mini duct) type

Model name				ARXK004GLGH	ARXK007GLGH	ARXK009GLGH	ARXK012GLGH
Power supply				230 V ~ 50 Hz			
Available voltage range				198—264 V			
Capacity	Cooling		kW	1.1	2.2	2.8	3.6
			Btu/h	3,800	7,500	9,600	12,300
	Heating		kW	1.3	2.8	3.2	4.0
			Btu/h	4,400	9,600	11,000	13,600
Input power			W	26	28		35
Static pressure range			Pa	0 to 30			
Standard static pressure			Pa	10			
Fan	Airflow rate	HIGH	m^3/h (l/s)	460 (128)			550 (153)
		MED—HIGH		440 (122)			520 (144)
		MED		420 (117)			480 (133)
		MED—LOW		400 (111)			450 (125)
		LOW		370 (103)			410 (114)
		QUIET		340 (94)			
	Type × Q'ty			Sirocco × 2			
	Motor output		W	80			
Sound pressure level*		HIGH	dB (A)	25	26		29
		MED—HIGH		24	25		27
		MED		23	24		26
		MED—LOW		22	23		25
		LOW		21	22		24
		QUIET		20	21		22
Heat exchanger type	Dimensions (H × W × D)		mm	336 × 490 × 13.3	336 × 490 × 26.6		
	Length			490			
	Fin pitch			1.3			
	Rows × Stages			1 × 16	2 × 16		
	Face area		m^2	0.16			
	Pipe type (Material)			Grooved H-pin (Copper)			
	Fin	Type (Material)		Slit (Aluminum)			
		Surface treatment		Hydrophilic coating			
Air filter	Net material			PP honeycomb			
Enclosure	Material			Galvanized sheet iron			
	Color			—			
Dimensions (H × W × D)	Net		mm	198 × 700 × 450			
	Gross			250 × 930 × 580			
Weight	Net		kg	14.5	15.5		16
	Gross			18	19		19.5
Connection pipe diameter	Liquid (Flare)		mm (in)	Ø 6.35 (Ø 1/4)			
	Gas (Flare)			Ø 9.52 (Ø 3/8)			Ø 12.70 (Ø 1/2)
	Drain hose			VP25 I.D.: Ø 25 (1); O.D.: Ø 32 (1-1/4)			

NOTES:

- Specifications are based on the following conditions:
  - Cooling: Indoor temperature of 27 °CDB/19 °CWB, and outdoor temperature of 35 °CDB/24 °CWB.
  - Heating: Indoor temperature of 20 °CDB/15 °CWB, and outdoor temperature of 7 °CDB/6 °CWB.
  - Pipe length: 7.5 m, Height difference: 0 m. (Between outdoor unit and indoor unit.)
- Protective function might work when using it outside the operation range.
- *: Sound pressure level:
  - Measured values in manufacturer's anechoic chamber.
  - Because of the surrounding sound environment, the sound levels measured in actual installation conditions might be higher than the specified values here.

INDOOR UNITS

Model name				ARXK014GLGH	ARXK018GLGH	ARXK024GLGH
Power supply				230 V ~ 50 Hz		
Available voltage range				198—264 V		
Capacity	Cooling		kW	4.5	5.6	7.1
			Btu/h	15,400	19,100	24,200
	Heating		kW	5.0	6.3	8.0
			Btu/h	17,100	21,500	27,300
Input power			W	66	73	80
Static pressure range			Pa	0 to 50		
Standard static pressure			Pa	15		
Fan	Airflow rate	HIGH	m^3/h (l/s)	760 (211)	930 (258)	1,160 (322)
		MED—HIGH		660 (183)	840 (233)	1,060 (294)
		MED		560 (156)	740 (206)	960 (267)
		MED—LOW		490 (136)	640 (178)	860 (239)
		LOW		410 (114)	540 (150)	750 (208)
		QUIET		340 (94)	470 (131)	610 (169)
	Type × Q'ty			Sirocco × 2	Sirocco × 3	Sirocco × 4
	Motor output		W	80	81	
Sound pressure level*		HIGH	dB (A)	34	33	32
		MED—HIGH		31	30	
		MED		28		
		MED—LOW		26		27
		LOW		24		25
		QUIET		22		
Heat exchanger type	Dimensions (H × W × D)		mm	336 × 490 × 26.6	336 × 690 × 26.6	336 × 890 × 26.6
	Length			490	690	890
	Fin pitch			1.3		
	Rows × Stages			2 × 16		
	Face area		m^2	0.16	0.23	0.30
	Pipe type (Material)			Grooved H-pin (Copper)		
	Fin	Type		Slit (Aluminum)		
		Surface treatment		Hydrophilic coating		
Air filter	Net material			PP honeycomb		
Enclosure	Material			Galvanized sheet iron		
	Color			—		
Dimensions (H × W × D)	Net		mm	198 × 700 × 450	198 × 900 × 450	198 × 1,100 × 450
	Gross			250 × 930 × 580	250 × 1,130 × 580	250 × 1,330 × 580
Weight	Net		kg	16.0	19.0	22.5
	Gross			19.5	23.0	26.5
Connection pipe diameter	Liquid (Flare)		mm (in)	Ø 6.35 (Ø 1/4)		Ø 9.52 (Ø 3/8)
	Gas (Flare)			Ø 12.70 (Ø 1/2)		Ø 15.88 (Ø 5/8)
	Drain hose			VP25 I.D.: Ø 25 (1); O.D.: Ø 32 (1-1/4)		

NOTES:

- Specifications are based on the following conditions:
  - Cooling: Indoor temperature of 27 °CDB/19 °CWB, and outdoor temperature of 35 °CDB/24 °CWB.
  - Heating: Indoor temperature of 20 °CDB/15 °CWB, and outdoor temperature of 7 °CDB/6 °CWB.
  - Pipe length: 7.5 m, Height difference: 0 m. (Between outdoor unit and indoor unit.)
- Protective function might work when using it outside the operation range.
- *: Sound pressure level:
  - Measured values in manufacturer's anechoic chamber.
  - Because of the surrounding sound environment, the sound levels measured in actual installation conditions might be higher than the specified values here.

INDOOR UNITS

2-7. Low static pressure duct (Slim duct)/Slim concealed floor type

Model name				ARXD007GLEH	ARXD009GLEH	ARXD012GLEH
Power supply				230 V ~ 50 Hz		
Available voltage range				198—264 V		
Capacity	Cooling		kW	2.2	2.8	3.6
			Btu/h	7,500	9,600	12,300
	Heating		kW	2.8	3.2	4.0
			Btu/h	9,600	10,900	13,600
Input power			W	44	50	54
Static pressure range			Pa	0 to 90		
Standard static pressure			Pa	25		
Fan	Airflow rate	HIGH	m^3/h (l/s)	550 (153)	600 (167)	600 (167)
		MED—HIGH		480 (133)	510 (142)	530 (147)
		MED		440 (122)	460 (128)	490 (136)
		MED—LOW		410 (114)	420 (117)	450 (125)
		LOW		370 (103)	370 (103)	410 (114)
		QUIET		320 (89)	320 (89)	340 (94)
	Type × Q'ty			Sirocco × 2		
	Motor output		W	80		81
Sound pressure level*		HIGH	dB (A)	28	29	30
		MED—HIGH		26	27	28
		MED		25	25	27
		MED—LOW		24	24	26
		LOW		22	22	24
		QUIET		21	21	22
Heat exchanger type	Dimensions (H × W × D)		mm	294 × 500 ×26.6		294 × 500 ×39.9
	Length			500		
	Fin pitch			1.3		
	Rows × Stages			2 × 14		3 × 14
	Face area		m^2	0.15		
	Pipe type (Material)			Grooved H-pin (Copper)		
	Fin	Type (Material)		Slit (Aluminum)		
		Surface treatment		Hydrophilic coating		
Air filter	Net material			PP honeycomb		
Enclosure	Material			Galvanized sheet iron		
	Color			—		
Dimensions (H × W × D)	Net		mm	198 × 700 × 620		
	Gross			270 × 935 × 770		
Weight	Net		kg	17		18
	Gross			21		23
Connection pipe diameter	Liquid (Flare)		mm (in)	Ø 6.35 (Ø 1/4)		
	Gas (Flare)			Ø 9.52 (Ø 3/8)		Ø 12.70 (Ø 1/2)
	Drain hose			VP25 I.D.: Ø 25 (1); O.D.: Ø 32 (1-1/4)		

NOTES:

- Specifications are based on the following conditions:
  - Cooling: Indoor temperature of 27 °CDB/19 °CWB, and outdoor temperature of 35 °CDB/24 °CWB.
  - Heating: Indoor temperature of 20 °CDB/15 °CWB, and outdoor temperature of 7 °CDB/6 °CWB.
  - Pipe length: 7.5 m, Height difference: 0 m. (Between outdoor unit and indoor unit.)
- Protective function might work when using it outside the operation range.
- *: Sound pressure level:
  - Measured values in manufacturer's anechoic chamber.
  - Because of the surrounding sound environment, the sound levels measured in actual installation conditions might be higher than the specified values here.

INDOOR UNITS

Model name				ARXD014GLEH	ARXD018GLEH	ARXD024GLEH
Power supply				230 V ~ 50 Hz		
Available voltage range				198—264 V		
Capacity	Cooling		kW	4.5	5.6	7.1
			Btu/h	15,400	19,100	24,200
	Heating		kW	5.0	6.3	8.0
			Btu/h	17,100	21,500	27,300
Input power			W	92	83	122
Static pressure range			Pa	0 to 90		0 to 50
Standard static pressure			Pa	25		
Fan	Airflow rate	HIGH	m^3/h (l/s)	800 (222)	940 (261)	1,330 (369)
		MED—HIGH		680 (189)	820 (228)	1,140 (317)
		MED		600 (167)	730 (203)	1,020 (283)
		MED—LOW		520 (144)	630 (175)	900 (250)
		LOW		440 (122)	540 (150)	780 (217)
		QUIET		340 (94)	470 (131)	610 (169)
	Type × Q'ty			Sirocco × 2	Sirocco × 3	Sirocco × 4
	Motor output		W	81	96	
Sound pressure level*		HIGH	dB (A)	34		35
		MED—HIGH		32	31	
		MED		30	29	
		MED—LOW		28	27	
		LOW		25	25	24
		QUIET		22	23	21
Heat exchanger type	Dimensions (H × W × D)		mm	294 × 500 × 39.9	294 × 700 × 39.9	294 × 900 × 39.9
	Length			500	700	900
	Fin pitch			1.3		
	Rows × Stages			3 × 14		
	Face area		m^2	0.15	0.21	0.26
	Pipe type (Material)			Grooved H-pin (Copper)		
	Fin	Type		Slit (Aluminum)		
		Surface treatment		Hydrophilic coating		
Air filter	Net material			PP honeycomb		
Enclosure	Material			Galvanized sheet iron		
	Color			—		
Dimensions (H × W × D)	Net		mm	198 × 700 × 620	198 × 900 × 620	198 × 1,100 × 620
	Gross			270 × 935 × 770	270 × 1,135 × 770	270 × 1,335 × 770
Weight	Net		kg	18	22	26
	Gross			23	27	31
Connection pipe diameter	Liquid (Flare)		mm (in)	Ø 6.35 (Ø 1/4)		Ø 9.52 (Ø 3/8)
	Gas (Flare)			Ø 12.70 (Ø 1/2)		Ø 15.88 (Ø 5/8)
	Drain hose			VP25 I.D.: Ø 25 (1); O.D.: Ø 32 (1-1/4)		

NOTES:

- Specifications are based on the following conditions:
  - Cooling: Indoor temperature of 27 °CDB/19 °CWB, and outdoor temperature of 35 °CDB/24 °CWB.
  - Heating: Indoor temperature of 20 °CDB/15 °CWB, and outdoor temperature of 7 °CDB/6 °CWB.
  - Pipe length: 7.5 m, Height difference: 0 m. (Between outdoor unit and indoor unit.)
- Protective function might work when using it outside the operation range.
- *: Sound pressure level:
  - Measured values in manufacturer's anechoic chamber.
  - Because of the surrounding sound environment, the sound levels measured in actual installation conditions might be higher than the specified values here.

INDOOR UNITS

2-8. Low static pressure duct type (High efficiency)

Model name				ARXP018GLFH	ARXP030GLFH
Power supply				220—240 V ~ 50 Hz	
Available voltage range				198—264 V	
Capacity	Cooling		kW	5.6	9.0
			Btu/h	19,100	30,700
	Heating		kW	6.3	10.0
			Btu/h	21,500	34,100
Input power			W	128	228
Static pressure range			Pa	0 to 80	
Standard static pressure			Pa	40	50
Fan	Airflow rate	HIGH	m^3/h (l/s)	1,540/1,440*1 (428/400)	1,940/1,660*1 (539/461)
		MED—HIGH		1,460/1,380*1 (406/383)	1,810/1,580*1 (503/439)
		MED		1,380/1,320*1 (383/367)	1,680/1,510*1 (467/419)
		MED—LOW		1,300/1260*1 (361/350)	1,550/1,440*1 (431/400)
		LOW		1,220/1,200*1 (339/333)	1,420/1,370*1 (394/381)
		QUIET		1,150/1,150*1 (319/319)	1,300/1,300*1 (361/361)
	Type × Q'ty			Sirocco × 2	
	Motor output		W	197	
Sound pressure level*		HIGH	dB (A)	35/34*1	39/36*1
		MED—HIGH		34/32*1	38/35*1
		MED		32/31*1	36/34*1
		MED—LOW		31/30*1	34/33*1
		LOW		29/29*1	32/31*1
		QUIET		28/28*1	30/30*1
Heat exchanger type	Dimensions (H × W × D)		mm	294 × 1,000 × 53.2	
	Length		mm	1,000	
	Fin pitch			1.4	
	Rows × Stages			4 × 14	
	Face area		m^2	0.29	
	Pipe type (Material)			Grooved H-pin (Copper)	
	Fin	Type		Slit (Aluminum)	
		Surface treatment		Hydrophilic coating	
Air filter (Option)	Model name			UTD-LF25NA	
	Net material			PP honeycomb	
Enclosure	Material			Galvanized steel sheet	
	Color			—	
Dimensions (H × W × D)	Net		mm	270 × 1,135 × 700	
	Gross			300 × 1,320 × 790	
Weight	Net		kg	40	
	Gross			48	
Connection pipe diameter	Liquid (Flare)		mm (in)	Ø 6.35 (Ø 1/4)	Ø 9.52 (Ø 3/8)
	Gas (Flare)			Ø 12.70 (Ø 1/2)	Ø 15.88 (Ø 5/8)
	Drain hose			VP25 I.D.: Ø 25 (1); O.D.: Ø 32 (1-1/4)	

NOTES:

- Specifications are based on the following conditions:
  - Cooling: Indoor temperature of 27 °CDB/19 °CWB, and outdoor temperature of 35 °CDB/24 °CWB.
  - Heating: Indoor temperature of 20 °CDB/15 °CWB, and outdoor temperature of 7 °CDB/6 °CWB.
  - Pipe length: 7.5 m, Height difference: 0 m. (Between outdoor unit and indoor unit.)
- Protective function might work when using it outside the operation range.
- *1: This value is “Cooling operation/Heating operation”.
- *: Sound pressure level:
  - Measured values in manufacturer’s anechoic chamber.
  - Because of the surrounding sound environment, the sound levels measured in actual installation conditions might be higher than the specified values here.

INDOOR UNITS

2-9. Medium static pressure duct type

Model name				ARXA024GLEH	ARXA030GLEH	ARXA036GLEH	ARXA045GLEH
Power supply				230 V ~ 50 Hz			
Available voltage range				198—264 V			
Capacity	Cooling		kW	7.1	9.0	11.2	12.5
			Btu/h	24,200	30,700	38,200	42,700
	Heating		kW	8.0	10.0	12.5	14.0
			Btu/h	27,300	34,100	42,700	47,800
Input power			W	94	108	194	240
Static pressure range			Pa	0 to 150			
Standard static pressure			Pa	40	50		60
Fan	Airflow rate	HIGH	m^3/h (l/s)	1,280 (356)	1,410 (392)	1,840 (511)	1,970 (547)
		MED—HIGH		1,180 (328)	1,350 (375)	1,750 (486)	1,910 (531)
		MED		1,090 (303)	1,280 (356)	1,660 (461)	1,860 (517)
		MED—LOW		1,000 (278)	1,240 (344)	1,600 (444)	1,780 (494)
		LOW		920 (256)	1,190 (331)	1,530 (425)	1,710 (475)
		QUIET		840 (233)	1,150 (319)	1,470 (408)	1,640 (456)
	Type × Q'ty			Sirocco × 2			
	Motor output		W	106	197		
Sound pressure level*		HIGH	dB (A)	31	34	37	41
		MED—HIGH		29	33	36	40
		MED		27	32	35	38
		MED—LOW		26	31	35	38
		LOW		24	30	34	37
		QUIET		23	29	33	36
Heat exchanger type	Dimensions (H × W × D)		mm	294 × 1,000 × 39.9	294 × 1,000 × 53.2		
	Length			1,000			
	Fin pitch			1.4			
	Rows × Stages			3 × 14	4 × 14		
	Face area		m^2	0.29			
	Pipe type (Material)			Grooved H-pin (Copper)			
	Fin	Type (Material)		Slit (Aluminum)			
		Surface treatment		Hydrophilic coating			
Air filter (Option)	Model name			UTD-LF25NA			
	Net material			PP honeycomb			
Enclosure	Material			Galvanized sheet iron			
	Color			—			
Dimensions (H × W × D)	Net		mm	270 × 1,135 × 700			
	Gross			300 × 1,320 × 790			
Weight	Net		kg	36	40		
	Gross			44	48		
Connection pipe diameter	Liquid (Flare)		mm (in)	Ø 9.52 (Ø 3/8)			
	Gas (Flare)			Ø 15.88 (Ø 5/8)			
	Drain hose			VP25 I.D.: Ø 25 (1); O.D.: Ø 32 (1-1/4)			

NOTES:

- Specifications are based on the following conditions:
  - Cooling: Indoor temperature of 27 °CDB/19 °CWB, and outdoor temperature of 35 °CDB/24 °CWB.
  - Heating: Indoor temperature of 20 °CDB/15 °CWB, and outdoor temperature of 7 °CDB/6 °CWB.
  - Pipe length: 7.5 m, Height difference: 0 m. (Between outdoor unit and indoor unit.)
- Protective function might work when using it outside the operation range.
- *: Sound pressure level:
  - Measured values in manufacturer's anechoic chamber.
  - Because of the surrounding sound environment, the sound levels measured in actual installation conditions might be higher than the specified values here.

INDOOR UNITS

2-10. High static pressure duct type

Model name				ARXC036GTEH	ARXC045GTEH
Power supply				230 V ~ 50 Hz	
Available voltage range				198—264 V	
Capacity	Cooling		kW	11.2	12.5
			Btu/h	38,200	42,700
	Heating		kW	12.5	14.0
			Btu/h	42,700	47,800
Input power			W	207	715
Static pressure range			Pa	0 to 200	100 to 250
Standard static pressure			Pa	100	
Fan	Airflow rate	HIGH	m^3/h (l/s)	1,990 (553)	3,500 (972)
		MED		1,680 (467)	3,000 (833)
		LOW		1,330 (369)	2,460 (683)
	Type × Q'ty			Sirocco × 2	
	Motor output		W	197	540
Sound pressure level*		HIGH	dB (A)	42	49
		MED		36	45
		LOW		32	42
Heat exchanger type	Dimensions (H × W × D)		mm	336 × 890 × 53.2	
	Length			890	
	Fin pitch			1.3	
	Rows × Stages			4 × 16	
	Face area		m^2	0.30	
	Pipe type (Material)			Grooved H-pin (Copper)	
	Fin	Type (Material)		Slit (Aluminum)	
		Surface treatment		Hydrophilic coating	
Air filter	Model name			UTD-LF60KA	
	Net material			PP honeycomb	
Enclosure	Material			Galvanized sheet iron	
	Color			—	
Dimensions (H × W × D)	Net		mm	400 × 1,050 × 500	
	Gross			460 × 1,230 × 640	
Weight	Net		kg	40	46
	Gross			45	51
Connection pipe diameter	Liquid (Flare)		mm (in)	Ø 9.52 (Ø 3/8)	
	Gas (Flare)			Ø 15.88 (Ø 5/8)	
	Drain hose			VP25 I.D.: Ø 25 (1); O.D.: Ø 32 (1-1/4)	

NOTES:

- Specifications are based on the following conditions:
  - Cooling: Indoor temperature of 27 °CDB/19 °CWB, and outdoor temperature of 35 °CDB/24 °CWB.
  - Heating: Indoor temperature of 20 °CDB/15 °CWB, and outdoor temperature of 7 °CDB/6 °CWB.
  - Pipe length: 7.5 m, Height difference: 0 m. (Between outdoor unit and indoor unit.)
- Protective function might work when using it outside the operation range.
- *: Sound pressure level:
  - Measured values in manufacturer's anechoic chamber.
  - Because of the surrounding sound environment, the sound levels measured in actual installation conditions might be higher than the specified values here.

INDOOR UNITS

2-11. Compact floor type

Model name				AG✱A004GCGH	AG✱A007GCGH	AG✱A009GCGH
Power supply				230 V ~ 50 Hz		
Available voltage range				198—264 V		
Capacity	Cooling		kW	1.1	2.2	2.8
			Btu/h	3,800	7,500	9,600
	Heating		kW	1.3	2.8	3.2
			Btu/h	4,400	9,600	10,900
Input power			W	12/14*1	16	17
Fan	Airflow rate	HIGH	m^3/h (l/s)	380/430*1 (106/119)	470 (131)	500 (139)
		MED—HIGH		350 (97)	420 (117)	450 (125)
		MED		320 (89)	390 (108)	400 (111)
		MED—LOW		310 (86)	360 (100)	
		LOW		280 (78)	330 (92)	
		QUIET		210 (58)	270 (75)	
	Type × Q'ty			Cross flow × 2		
	Motor output		W	16 × 2		
Sound pressure level*2		HIGH	dB (A)	35/36*1	37	38
		MED—HIGH		33	35	36
		MED		31	33	34
		MED—LOW		30	31	
		LOW		28	29	
		QUIET		22		
Heat exchanger type	Dimensions (H × W × D)		mm	378 × 550 ×26.6		
	Length			550		
	Fin pitch			1.2		
	Rows × Stages			2 × 18		
	Pipe type (Material)			Grooved H-pin (Copper)		
	Fin	Type (Material)		Slit (Aluminum)		
		Surface treatment		Hydrophilic coating		
Air filter	Net material			PP plain weave		
Enclosure	Material			Plastic		
	Color			White Approximate color of Munsell 5Y 9/0.5NN		
Dimensions (H × W × D)	Net		mm	600 × 740 × 200		
	Gross			700 × 820 × 310		
Weight	Net		kg	14.5	15	
	Gross			18.5	19	
Connection pipe diameter	Liquid (Flare)		mm (in)	Ø 6.35 (Ø 1/4)		
	Gas (Flare)			Ø 9.52 (Ø 3/8)		
	Drain hose			I.D.: Ø 13.8 (9/16); O.D.: Ø 15.8 to Ø 16.7 (5/8 to 11/16)		

NOTES:

- Specifications are based on the following conditions:
  - Cooling: Indoor temperature of 27 °CDB/19 °CWB, and outdoor temperature of 35 °CDB/24 °CWB.
  - Heating: Indoor temperature of 20 °CDB/15 °CWB, and outdoor temperature of 7 °CDB/6 °CWB.
  - Pipe length: 7.5 m, Height difference: 0 m. (Between outdoor unit and indoor unit.)
- Protective function might work when using it outside the operation range.
- *1: This value is “Cooling operation/Heating operation”.
- *2: Sound pressure level:
  - Measured values in manufacturer’s anechoic chamber.
  - Because of the surrounding sound environment, the sound levels measured in actual installation conditions might be higher than the specified values here.

INDOOR UNITS

Model name				AG✱A012GCGH	AG✱A014GCGH
Power supply				230 V ~ 50 Hz	
Available voltage range				198—264 V	
Capacity	Cooling		kW	3.6	4.0
			Btu/h	12,300	13,600
	Heating		kW	4.0	4.5
			Btu/h	13,600	15,400
Input power			W	22	29
Fan	Airflow rate	HIGH	m^3/h (l/s)	590 (164)	670 (186)
		MED—HIGH		520 (144)	590 (164)
		MED		470 (131)	520 (144)
		MED—LOW		420 (117)	450 (125)
		LOW		390 (108)	
		QUIET		340 (94)	
	Type × Q'ty			Cross flow × 2	
	Motor output		W	16 × 2	
Sound pressure level*		HIGH	dB (A)	42	46
		MED—HIGH		39	42
		MED		37	39
		MED—LOW		35	36
		LOW		33	
		QUIET		30	
Heat exchanger type	Dimensions (H × W × D)		mm	378 × 550 ×26.6	
	Length			550	
	Fin pitch			1.2	
	Rows × Stages			2 × 18	
	Pipe type (Material)			Grooved H-pin (Copper)	
	Fin	Type		Slit (Aluminum)	
		Surface treatment		Hydrophilic coating	
Air filter	Net material			PP plain weave	
Enclosure	Material			Plastic	
	Color			White Approximate color of Munsell 5Y 9/0.5NN	
Dimensions (H × W × D)	Net		mm	600 × 740 × 200	
	Gross			700 × 820 × 310	
Weight	Net		kg	15	
	Gross			19	
Connection pipe diameter	Liquid (Flare)		mm (in)	Ø 6.35 (Ø 1/4)	
	Gas (Flare)			Ø 12.70 (Ø 1/2)	
	Drain hose			I.D.: Ø 13.8 (9/16); O.D.: Ø 15.8 to Ø 16.7 (5/8 to 11/16)	

NOTES:

- Specifications are based on the following conditions:
  - Cooling: Indoor temperature of 27 °CDB/19 °CWB, and outdoor temperature of 35 °CDB/24 °CWB.
  - Heating: Indoor temperature of 20 °CDB/15 °CWB, and outdoor temperature of 7 °CDB/6 °CWB.
  - Pipe length: 7.5 m, Height difference: 0 m. (Between outdoor unit and indoor unit.)
- Protective function might work when using it outside the operation range.
- *: Sound pressure level:
  - Measured values in manufacturer's anechoic chamber.
  - Because of the surrounding sound environment, the sound levels measured in actual installation conditions might be higher than the specified values here.

INDOOR UNITS

2-12. Compact floor type (EEV external model)

Model name				AG✱E004GCEH	AG✱E007GCEH	AG✱E009GCEH
Power supply				230 V ~ 50 Hz		
Available voltage range				198—264 V		
Capacity	Cooling		kW	1.1	2.2	2.8
			Btu/h	3,800	7,500	9,600
	Heating		kW	1.3	2.8	3.2
			Btu/h	4,400	9,600	10,900
Input power			W	12/14*1	16	17
Fan	Airflow rate	HIGH	m^3/h (l/s)	380/430*1 (106/119)	470 (131)	500 (139)
		MED—HIGH		350 (97)	420 (117)	450 (125)
		MED		320 (89)	390 (108)	400 (111)
		MED—LOW		310 (86)	360 (100)	
		LOW		280 (78)	330 (92)	
		QUIET		210 (58)	270 (75)	
	Type × Q'ty			Cross flow × 2		
	Motor output		W	16 × 2		
Sound pressure level*2		HIGH	dB (A)	35/36*1	37	38
		MED—HIGH		33	35	36
		MED		31	33	34
		MED—LOW		30	31	
		LOW		28	29	
		QUIET		22		
Heat exchanger type	Dimensions (H × W × D)		mm	378 × 550 ×26.6		
	Length			550		
	Fin pitch			1.2		
	Rows × Stages			2 × 18		
	Pipe type (Material)			Grooved H-pin (Copper)		
	Fin	Type (Material)		Slit (Aluminum)		
		Surface treatment		Hydrophilic coating		
Air filter	Net material			PP plain weave		
Enclosure	Material			Plastic		
	Color			White Approximate color of Munsell 5Y 9/0.5NN		
Dimensions (H × W × D)	Net		mm	600 × 740 × 200		
	Gross			700 × 820 × 310		
Weight	Net		kg	14.5		
	Gross			18	18.5	
Connection pipe diameter	Liquid (Flare)		mm (in)	Ø 6.35 (Ø 1/4)		
	Gas (Flare)			Ø 9.52 (Ø 3/8)		
	Drain hose			I.D.: Ø 13.8 (9/16); O.D.: Ø 15.8 to Ø 16.7 (5/8 to 11/16)		
EV kit (Option)				UTR-EV09XB		

NOTES:

- Specifications are based on the following conditions:
  - Cooling: Indoor temperature of 27 °CDB/19 °CWB, and outdoor temperature of 35 °CDB/24 °CWB.
  - Heating: Indoor temperature of 20 °CDB/15 °CWB, and outdoor temperature of 7 °CDB/6 °CWB.
  - Pipe length: 7.5 m, Height difference: 0 m. (Between outdoor unit and indoor unit.)
- Protective function might work when using it outside the operation range.
- *1: This value is “Cooling operation/Heating operation”.
- *2: Sound pressure level:
  - Measured values in manufacturer’s anechoic chamber.
  - Because of the surrounding sound environment, the sound levels measured in actual installation conditions might be higher than the specified values here.

INDOOR UNITS

Model name				AG✱E012GCEH	AG✱E014GCEH
Power supply				230 V ~ 50 Hz	
Available voltage range				198—264 V	
Capacity	Cooling		kW	3.6	4.0
			Btu/h	12,300	13,600
	Heating		kW	4.0	4.5
			Btu/h	13,600	15,400
Input power			W	22	29
Fan	Airflow rate	HIGH	m^3/h (l/s)	590 (164)	670 (186)
		MED—HIGH		520 (144)	590 (164)
		MED		470 (131)	520 (144)
		MED—LOW		420 (117)	450 (125)
		LOW		390 (108)	
		QUIET		340 (94)	
	Type × Q'ty			Cross flow × 2	
	Motor output		W	16 × 2	
Sound pressure level*		HIGH	dB (A)	42	46
		MED—HIGH		39	42
		MED		37	39
		MED—LOW		35	36
		LOW		33	
		QUIET		30	
Heat exchanger type	Dimensions (H × W × D)		mm	378 × 550 ×26.6	
	Length			550	
	Fin pitch			1.2	
	Rows × Stages			2 × 18	
	Pipe type (Material)			Grooved H-pin (Copper)	
	Fin	Type		Slit (Aluminum)	
		Surface treatment		Hydrophilic coating	
Air filter	Net material			PP plain weave	
Enclosure	Material			Plastic	
	Color			White Approximate color of Munsell 5Y 9/0.5NN	
Dimensions (H × W × D)	Net		mm	600 × 740 × 200	
	Gross			700 × 820 × 310	
Weight	Net		kg	14.5	
	Gross			18.5	
Connection pipe diameter	Liquid (Flare)		mm (in)	Ø 6.35 (Ø 1/4)	
	Gas (Flare)			Ø 12.70 (Ø 1/2)	
	Drain hose			I.D.: Ø 13.8 (9/16); O.D.: Ø 15.8 to Ø 16.7 (5/8 to 11/16)	
EV kit (Option)				UTR-EV14XB	

NOTES:

- Specifications are based on the following conditions:
  - Cooling: Indoor temperature of 27 °CDB/19 °CWB, and outdoor temperature of 35 °CDB/24 °CWB.
  - Heating: Indoor temperature of 20 °CDB/15 °CWB, and outdoor temperature of 7 °CDB/6 °CWB.
  - Pipe length: 7.5 m, Height difference: 0 m. (Between outdoor unit and indoor unit.)
- Protective function might work when using it outside the operation range.
- *: Sound pressure level:
  - Measured values in manufacturer's anechoic chamber.
  - Because of the surrounding sound environment, the sound levels measured in actual installation conditions might be higher than the specified values here.

INDOOR UNITS

2-13. Floor/Ceiling type

Model name				AB∗A012GTEH	AB∗A014GTEH	AB∗A018GTEH	AB∗A024GTEH
Power supply				230 V ~ 50 Hz			
Available voltage range				198—264 V			
Capacity	Cooling		kW	3.6	4.5	5.6	7.1
			Btu/h	12,300	15,400	19,100	24,200
	Heating		kW	4.0	5.0	6.3	8.0
			Btu/h	13,600	17,100	21,500	27,300
Input power			W	30	42	74	99
Fan	Airflow rate	HIGH	m^3/h (l/s)	660 (183)	780 (217)	1,000 (278)	
		MED—HIGH		620 (172)	740 (206)	910 (253)	930 (258)
		MED		580 (161)	690 (192)	830 (231)	870 (242)
		MED—LOW		550 (153)	640 (178)	750 (208)	800 (222)
		LOW		520(144)	600 (167)	660 (183)	740 (206)
		QUIET		490 (136)	550 (153)	580(161)	680(189)
	Type × Q'ty			Sirocco × 2			
	Motor output		W	80			
Sound pressure level*		HIGH	dB (A)	36	40	46	47
		MED—HIGH		34	39	44	45
		MED		33	38	42	43
		MED—LOW		31	36	40	41
		LOW		29	35	37	39
		QUIET		28	34	35	37
Heat exchanger type	Dimensions (H × W × D)		mm	252 × 800 ×26.6	252 × 800 ×39.9		252 × 800 ×53.2
	Length			800			
	Fin pitch			1.2	1.3		
	Rows × Stages			2 × 12	3 × 12		4 × 12
	Face area		m^2	0.2			
	Pipe type (Material)			Grooved H-pin (Copper)			
	Fin	Type (Material)		Slit (Aluminum)			
		Surface treatment		Hydrophilic coating			
Air filter	Net material			PP monofilament net			
Enclosure	Material			Plastic			
	Color			White Approximate color of Munsell N9.25/			
Dimensions (H × W × D)	Net		mm	199 × 990 × 655			
	Gross			320 × 1,150 × 790			
Weight	Net		kg	25	26		27
	Gross			35	36		38
Connection pipe diameter	Liquid (Flare)		mm (in)	Ø 6.35 (Ø 1/4)			Ø 9.52 (Ø 3/8)
	Gas (Flare)			Ø 12.70 (Ø 1/2)			Ø 15.88 (Ø 5/8)
	Drain hose			VP25 I.D.: Ø 25 (1); O.D.: Ø 32 (1-1/4)			

NOTES:

- Specifications are based on the following conditions:
  - Cooling: Indoor temperature of 27 °CDB/19 °CWB, and outdoor temperature of 35 °CDB/24 °CWB.
  - Heating: Indoor temperature of 20 °CDB/15 °CWB, and outdoor temperature of 7 °CDB/6 °CWB.
  - Pipe length: 7.5 m, Height difference: 0 m. (Between outdoor unit and indoor unit.)
- Protective function might work when using it outside the operation range.
- *: Sound pressure level:
  - Measured values in manufacturer's anechoic chamber.
  - Because of the surrounding sound environment, the sound levels measured in actual installation conditions might be higher than the specified values here.

INDOOR UNITS

2-14. Ceiling type

Model name				AB∗A030GTEH	AB∗A036GTEH	AB∗A045GTEH	AB∗A054GTEH
Power supply				230 V ~ 50 Hz			
Available voltage range				198—264 V			
Capacity	Cooling		kW	9.0	11.2	12.5	14.0
			Btu/h	30,700	38,200	42,700	47,800
	Heating		kW	10.0	12.5	14.0	16.0
			Btu/h	34,100	42,700	47,800	54,600
Input power			W	66	85	131	180
Fan	Airflow rate	HIGH	m^3/h (l/s)	1,630 (453)	1,690 (469)	2,010 (558)	2,270 (631)
		MED—HIGH		1,520 (422)	1,560 (433)	1,840 (511)	2,070 (575)
		MED		1,420 (394)	1,450 (403)	1,690 (469)	1,860 (517)
		MED—LOW		1,320 (367)	1,360 (378)	1,530 (425)	1,660 (461)
		LOW		1,220 (339)	1,270 (353)	1,380 (383)	1,470 (408)
		QUIET		1,140(317)	1,170(325)	1,230(342)	1,280(356)
	Type × Q'ty			Sirocco × 4			
	Motor output		W	130			
Sound pressure level*		HIGH	dB (A)	42	45	48	51
		MED—HIGH		40	41	46	49
		MED		39		45	46
		MED—LOW		37	38	41	43
		LOW		35	36	38	40
		QUIET		33	34	35	36
Heat exchanger type	Dimensions (H × W × D)		mm	252 × 1,350 ×39.9	Main: 252 × 1,350 ×39.9 Sub: 168 × 1,350 × 13.3		
	Length			1,350			
	Fin pitch			1.45			
	Rows × Stages			3 × 12	Main: 3 × 12 Sub: 1 × 8		
	Face area		m^2	0.34			
	Pipe type (Material)			Grooved H-pin (Copper)			
	Fin	Type (Material)		Slit (Aluminum)			
		Surface treatment		Hydrophilic coating			
Air filter	Net material			PP monofilament net			
Enclosure	Material			Plastic			
	Color			White Approximate color of Munsell N9.25/			
Dimensions (H × W × D)	Net		mm	240 × 1,660 × 700			
	Gross			318 × 1,800 × 790			
Weight	Net		kg	46	48		
	Gross			59	61		
Connection pipe diameter	Liquid (Flare)		mm (in)	Ø 9.52 (Ø 3/8)			
	Gas (Flare)			Ø 15.88 (Ø 5/8)			
	Drain hose			VP25 I.D.: Ø 25 (1); O.D.: Ø 32 (1-1/4)			

NOTES:

- Specifications are based on the following conditions:
  - Cooling: Indoor temperature of 27 °CDB/19 °CWB, and outdoor temperature of 35 °CDB/24 °CWB.
  - Heating: Indoor temperature of 20 °CDB/15 °CWB, and outdoor temperature of 7 °CDB/6 °CWB.
  - Pipe length: 7.5 m, Height difference: 0 m. (Between outdoor unit and indoor unit.)
- Protective function might work when using it outside the operation range.
- *: Sound pressure level:
  - Measured values in manufacturer's anechoic chamber.
  - Because of the surrounding sound environment, the sound levels measured in actual installation conditions might be higher than the specified values here.

INDOOR UNITS

2-15. Wall mounted type

Model name					AS∗A004GCGH	AS∗A007GCGH	AS∗A009GCGH
Power supply					230 V ~ 50 Hz		
Available voltage range					198—264 V		
Capacity	Cooling			kW	1.1	2.2	2.8
				Btu/h	3,800	7,500	9,600
	Heating			kW	1.3	2.8	3.2
				Btu/h	4,400	9,600	10,900
Input power				W	12	16	20
Fan	Airflow rate		HIGH	m^3/h (l/s)	450 (125)	550 (153)	610 (169)
			MED—HIGH		430 (119)	510 (142)	560 (156)
			MED		400 (111)	470 (131)	510 (142)
			MED—LOW		380 (106)	410 (114)	440 (122)
			LOW		360 (100)		
			QUIET		310 (86)		
	Type × Q'ty				Cross flow × 1		
	Motor output			W	30		
Sound pressure level*			HIGH	dB (A)	31	34	37
			MED—HIGH		30	32	35
			MED		28	30	32
			MED—LOW		27	28	29
			LOW		26	26	
			QUIET		22		
Heat exchanger type	Dimensions (H × W × D)			mm	320 × 630 × 20	Main: 320 × 630 × 20 Sub: 84 × 630 × 13.3	
	Length				630		
	Fin pitch				1.1	Main: 1.1 Sub: 1.4	
	Rows × Stages				2 × 20	Main: 2 × 20 Sub: 1 × 4	
	Pipe type (Material)				Grooved H-pin (Copper)		
	Fin	Type (Material)			Slit (Aluminum)		
		Surface treatment			Hydrophilic coating		
Air filter	Net material				PP honeycomb		
Enclosure	Material				Plastic		
	Color				White Approximate color of Munsell N9.25/		
Dimensions (H × W × D)	Net	Main body		mm	268 × 840 × 203		
	Gross				270 × 884 × 336		
Weight	Net			kg	8.0	8.5	
	Gross				10.5	11.0	
Connection pipe diameter	Liquid (Flare)			mm (in)	Ø 6.35 (Ø 1/4)		
	Gas (Flare)				Ø 9.52 (Ø 3/8)		
	Drain hose				I.D.: Ø 13.8 (9/16); O.D.: Ø 15.8 to Ø 16.7 (5/8 to 11/16)		

NOTES:

- Specifications are based on the following conditions:
  - Cooling: Indoor temperature of 27 °CDB/19 °CWB, and outdoor temperature of 35 °CDB/24 °CWB.
  - Heating: Indoor temperature of 20 °CDB/15 °CWB, and outdoor temperature of 7 °CDB/6 °CWB.
  - Pipe length: 7.5 m, Height difference: 0 m. (Between outdoor unit and indoor unit.)
- Protective function might work when using it outside the operation range.
- *: Sound pressure level:
  - Measured values in manufacturer's anechoic chamber.
  - Because of the surrounding sound environment, the sound levels measured in actual installation conditions might be higher than the specified values here.

INDOOR UNITS

Model name				AS∗A012GCGH	AS∗A014GCGH
Power supply				230 V ~ 50 Hz	
Available voltage range				198—264 V	
Capacity	Cooling		kW	3.6	4.0
			Btu/h	12,300	13,600
	Heating		kW	4.0	4.5
			Btu/h	13,600	15,400
Input power			W	25	36
Fan	Airflow rate	HIGH	m^3/h (l/s)	690 (192)	800 (222)
		MED—HIGH		610 (169)	740 (206)
		MED		560 (156)	680 (189)
		MED—LOW		530 (147)	610 (169)
		LOW		470 (131)	550 (153)
		QUIET		330 (92)	
	Type × Q'ty			Cross flow × 1	
	Motor output		W	30	
Sound pressure level*		HIGH	dB (A)	40	44
		MED—HIGH		37	42
		MED		35	40
		MED—LOW		33	37
		LOW		30	34
		QUIET		24	
Heat exchanger type	Dimensions (H × W × D)		mm	Main: 320 × 630 × 20 Sub: 84 × 630 × 13.3	
	Length			630	
	Fin pitch			Main: 1.1, Sub: 1.4	
	Rows × Stages			Main: 2 × 20 Sub: 1 × 4	
	Face area			—	
	Pipe type (Material)			Grooved H-pin (Copper)	
	Fin	Type		Slit (Aluminum)	
		Surface treatment		Hydrophilic coating	
Air filter	Net material			PP honeycomb	
Enclosure	Material			Plastic	
	Color			White Approximate color of Munsell N9.25/	
Dimensions (H × W × D)	Net	Main body	mm	268 × 840 × 203	
	Gross			270 × 884 × 336	
Weight	Net		kg	8.5	
	Gross			11	
Connection pipe diameter	Liquid (Flare)		mm (in)	Ø 6.35 (Ø 1/4)	
	Gas (Flare)			Ø 12.70 (Ø 1/2)	
	Drain hose			I.D.: Ø 13.8 (9/16); O.D.: Ø 15.8 to Ø 16.7 (5/8 to 11/16)	

NOTES:

- Specifications are based on the following conditions:
  - Cooling: Indoor temperature of 27 °CDB/19 °CWB, and outdoor temperature of 35 °CDB/24 °CWB.
  - Heating: Indoor temperature of 20 °CDB/15 °CWB, and outdoor temperature of 7 °CDB/6 °CWB.
  - Pipe length: 7.5 m, Height difference: 0 m. (Between outdoor unit and indoor unit.)
- Protective function might work when using it outside the operation range.
- *: Sound pressure level:
  - Measured values in manufacturer's anechoic chamber.
  - Because of the surrounding sound environment, the sound levels measured in actual installation conditions might be higher than the specified values here.

INDOOR UNITS

Model name					AS∗A18GBCH	AS∗A24GBCH	AS∗A030GTEH	AS∗A034GTEH
Power supply					230 V ~ 50 Hz			
Available voltage range					198—264 V			
Capacity	Cooling			kW	5.6	7.1	9.0	10.0
				Btu/h	19,100	24,200	30,700	34,100
	Heating			kW	6.3	8.0	10.0	11.2
				Btu/h	21,500	27,300	34,100	38,200
Input power				W	32	60	74	103
Fan	Airflow rate		HIGH	m^3/h (l/s)	840 (233)	1,100 (306)	1,440 (400)	1,620/1,520*1 (450/422)
			MED—HIGH		—		1,200 (333)	1,300 (361)
			MED		770 (214)	910 (253)	1,050 (292)	1,120 (311)
			MED—LOW		—		940 (261)	980 (272)
			LOW		690 (192)	730 (203)	890 (247)	
			QUIET		—		700 (194)	
	Type × Q'ty				Cross flow × 1			
	Motor output			W	42		61	
Sound pressure level*2			HIGH	dB (A)	41	48	53	55/54*1
			MED—HIGH		—		49	51
			MED		39	43	45	47
			MED—LOW		—		42	43
			LOW		35		39	
			QUIET		—		33	
Heat exchanger type	Dimensions (H × W × D)			mm	Main: 378 × 817 × 26.6 Sub1: 84 × 817 × 13.3 Sub2: 84 × 817 × 13.3		Main: 462 × 900 × 26.6 Sub1: 126 × 900 × 13.3 Sub2: 84 × 900 × 13.3	
	Length				817		900	
	Fin pitch				Main: 1.2 Sub: 1.4		Main: 1.2 Sub: 1.4	
	Rows × Stages				Main: 2 × 18 Sub1: 1 × 4 Sub2: 1 × 4		Main: 2 × 22 Sub1: 1 × 6 Sub2: 1 × 4	
	Pipe type (Material)				Grooved H-pin (Copper)			
	Fin	Type			Slit (Aluminum)			
		Surface treatment			Hydrophilic coating			
Air filter	Net material				PP monofilament net		PP plain weave	
Enclosure	Material				Plastic			
	Color				White Approximate color of Munsell N9.25/			
Dimensions (H × W × D)	Net	Main body		mm	320 × 998 × 238		340 × 1,150 × 280	
	Gross				329 × 1,090 × 429		405 × 1,270 × 450	
Weight	Net			kg	15		18	
	Gross				19		24	
Connection pipe diameter	Liquid (Flare)			mm (in)	Ø 6.35 (Ø 1/4)	Ø 9.52 (Ø 3/8)		
	Gas (Flare)				Ø 12.70 (Ø 1/2)	Ø 15.88 (Ø 5/8)		
	Drain hose				I.D.: Ø 12 (1/2); O.D.: Ø 16 (5/8)		I.D.: Ø 13.8 (9/16) O.D.: Ø 15.8 to Ø 16.7 (5/8 to 11/16)	

NOTES:

- Specifications are based on the following conditions:
  - Cooling: Indoor temperature of 27 °CDB/19 °CWB, and outdoor temperature of 35 °CDB/24 °CWB.
  - Heating: Indoor temperature of 20 °CDB/15 °CWB, and outdoor temperature of 7 °CDB/6 °CWB.
  - Pipe length: 7.5 m, Height difference: 0 m. (Between outdoor unit and indoor unit.)
- Protective function might work when using it outside the operation range.
- *1: This value is “Cooling operation/Heating operation”.
- *2: Sound pressure level:
  - Measured values in manufacturer’s anechoic chamber.
  - Because of the surrounding sound environment, the sound levels measured in actual installation conditions might be higher than the specified values here.

INDOOR UNITS

2-16. Wall mounted type (EEV external model)

Model name				AS∗E004GCEH	AS∗E007GCEH	AS∗E009GCEH
Power supply				230 V ~ 50 Hz		
Available voltage range				198—264 V		
Capacity	Cooling		kW	1.1	2.2	2.8
			Btu/h	3,800	7,500	9,600
	Heating		kW	1.3	2.8	3.2
			Btu/h	4,400	9,600	10,900
Input power			W	12	16	20
Fan	Airflow rate	HIGH	m^3/h (l/s)	450 (125)	550 (153)	610 (169)
		MED—HIGH		430 (119)	510 (142)	560 (156)
		MED		400 (111)	470 (131)	510 (142)
		MED—LOW		380 (106)	410 (114)	440 (122)
		LOW		360 (100)		
		QUIET		310 (86)		
	Type × Q'ty			Cross flow × 1		
	Motor output		W	30		
Sound pressure level*		HIGH	dB (A)	31	34	37
		MED—HIGH		30	32	35
		MED		28	30	32
		MED—LOW		27	28	29
		LOW		26		
		QUIET		22		
Heat exchanger type	Dimensions (H × W × D)		mm	320 × 630 × 20	Main: 320 × 630 × 20 Sub: 84 × 630 × 13.3	
	Length			630		
	Fin pitch			1.1	Main: 1.1 Sub: 1.4	
	Rows × Stages			2 × 20	Main: 2 × 20 Sub: 1 × 4	
	Pipe type (Material)			Grooved H-pin (Copper)		
	Fin	Type (Material)		Slit (Aluminum)		
		Surface treatment		Hydrophilic coating		
Air filter	Net material			PP honeycomb		
Enclosure	Material			Plastic		
	Color			White Approximate color of Munsell N9.25/		
Dimensions (H × W × D)	Net	Main body	mm	268 × 840 × 203		
	Gross			270 × 884 × 336		
Weight	Net		kg	8.0	8.5	
	Gross			10.5	11.0	
Connection pipe diameter	Liquid (Flare)		mm (in)	Ø 6.35 (Ø 1/4)		
	Gas (Flare)			Ø 9.52 (Ø 3/8)		
	Drain hose			I.D.: Ø 13.8 (9/16); O.D.: Ø 15.8 to Ø 16.7 (5/8 to 11/16)		
EV kit (Option)				UTR-EV09XB		

NOTES:

- Specifications are based on the following conditions:
  - Cooling: Indoor temperature of 27 °CDB/19 °CWB, and outdoor temperature of 35 °CDB/24 °CWB.
  - Heating: Indoor temperature of 20 °CDB/15 °CWB, and outdoor temperature of 7 °CDB/6 °CWB.
  - Pipe length: 7.5 m, Height difference: 0 m. (Between outdoor unit and indoor unit.)
- Protective function might work when using it outside the operation range.
- *: Sound pressure level:
  - Measured values in manufacturer's anechoic chamber.
  - Because of the surrounding sound environment, the sound levels measured in actual installation conditions might be higher than the specified values here.

INDOOR UNITS

Model name				AS✱E012GCEH	AS✱E014GCEH
Power supply				230 V ~ 50 Hz	
Available voltage range				198—264 V	
Capacity	Cooling		kW	3.6	4.0
			Btu/h	12,300	13,600
	Heating		kW	4.0	4.5
			Btu/h	13,600	15,400
Input power			W	25	36
Fan	Airflow rate	HIGH	m^3/h (l/s)	690 (192)	800 (222)
		MED—HIGH		610 (169)	740 (206)
		MED		560 (156)	680 (189)
		MED—LOW		530 (147)	610 (169)
		LOW		470 (131)	550 (153)
		QUIET		330 (92)	
	Type × Q'ty			Cross flow × 1	
	Motor output		W	30	
Sound pressure level*		HIGH	dB (A)	40	44
		MED—HIGH		37	42
		MED		35	40
		MED—LOW		33	37
		LOW		30	34
		QUIET		24	
Heat exchanger type	Dimensions (H × W × D)		mm	Main: 320 × 630 × 20 Sub: 84 × 630 × 13.3	
	Length			630	
	Fin pitch			Main: 1.1 Sub: 1.4	
	Rows × Stages			Main: 2 × 20 Sub: 1 × 4	
	Face area			—	
	Pipe type (Material)			Grooved H-pin (Copper)	
	Fin	Type		Slit (Aluminum)	
		Surface treatment		Hydrophilic coating	
Air filter	Net material			PP honeycomb	
Enclosure	Material			Plastic	
	Color			White Approximate color of Munsell N9.25/	
Dimensions (H × W × D)	Net	Main body	mm	268 × 840 × 203	
	Gross			270 × 884 × 336	
Weight	Net		kg	8.5	
	Gross			11	
Connection pipe diameter	Liquid (Flare)		mm (in)	Ø 6.35 (Ø 1/4)	
	Gas (Flare)			Ø 12.70 (Ø 1/2)	
	Drain hose			I.D.: Ø 13.8 (9/16); O.D.: Ø 15.8 to Ø 16.7 (5/8 to 11/16)	
EV kit (Option)				UTR-EV14XB	

NOTES:

- Specifications are based on the following conditions:
  - Cooling: Indoor temperature of 27 °CDB/19 °CWB, and outdoor temperature of 35 °CDB/24 °CWB.
  - Heating: Indoor temperature of 20 °CDB/15 °CWB, and outdoor temperature of 7 °CDB/6 °CWB.
  - Pipe length: 7.5 m, Height difference: 0 m. (Between outdoor unit and indoor unit.)
- Protective function might work when using it outside the operation range.
- *: Sound pressure level:
  - Measured values in manufacturer's anechoic chamber.
  - Because of the surrounding sound environment, the sound levels measured in actual installation conditions might be higher than the specified values here.

INDOOR UNITS

3. Electrical characteristics

Indoor unit		Power supply: 50 Hz, 230 V		Indoor rated	
Type	Model name	MCA	MFA	Input power	Current
		A	A	W	A
Compact cassette	AUXB004GLEH	0.20	20	23	0.17
	AUXB007GLEH	0.20		25	0.17
	AUXB009GLEH	0.20		25	0.17
	AUXB012GLEH	0.24		29	0.20
	AUXB014GLEH	0.29		35	0.24
	AUXB018GLEH	0.30		36	0.25
	AUXB024GLEH	0.75		84	0.62
4-way flow cassette	AUXD18GALH	0.32	20	39	0.27
	AUXD24GALH	0.38		46	0.32
	AUXA30GALH	0.51		59	0.42
	AUXA34GALH	0.61		77	0.51
	AUXA36GALH	0.64		80	0.53
	AUXA45GALH	0.83		99	0.69
	AUXA54GALH	0.94		119	0.78
Circular flow cassette	AUXN009GLAH	0.24	20	20	0.20
	AUXN012GLAH	0.24		20	0.20
	AUXN014GLAH	0.24		20	0.20
	AUXM018GLEH	0.24		20	0.20
	AUXM024GLEH	0.29		25	0.24
	AUXM030GLEH	0.50		49	0.41
	AUXK018GLEH	0.41		40	0.34
	AUXK024GLEH	0.41		40	0.34
	AUXK030GLEH	0.46		47	0.38
	AUXK034GLEH	0.46		47	0.38
	AUXK036GLEH	0.57		61	0.47
	AUXK045GLEH	0.81		89	0.67
	AUXK054GLEH	1.04		116	0.86
3D flow cassette	AUXS018GLEH	0.44	20	20/28*	0.22/0.27*
	AUXS024GLEH	0.65		34/43*	0.31/0.38*
One way flow cassette	AUXV004GLEH	0.34	20	30	0.23
	AUXV007GLEH	0.38		42	0.34
	AUXV009GLEH	0.38		42	0.34
	AUXV012GLEH	0.56		60	0.49
	AUXV014GLEH	0.36		38	0.30
	AUXV018GLEH	0.51		56	0.45
	AUXV024GLEH	0.93		99	0.82
Low static pressure duct (Mini duct)	ARXK004GLGH	0.32	20	26	0.21
	ARXK007GLGH	0.34		28	0.23
	ARXK009GLGH	0.34		28	0.23
	ARXK012GLGH	0.44		35	0.30
	ARXK014GLGH	0.81		66	0.54
	ARXK018GLGH	0.94		73	0.55
	ARXK024GLGH	1.04		80	0.61
Low static pressure duct (Slim duct)/Slim concealed floor	ARXD007GLEH	0.38	20	44	0.31
	ARXD009GLEH	0.42		50	0.35
	ARXD012GLEH	0.46		54	0.38
	ARXD014GLEH	0.74		92	0.61
	ARXD018GLEH	0.66		83	0.55
	ARXD024GLEH	0.94		122	0.78

INDOOR UNITS

Indoor unit		Power supply: 50 Hz, 230 V		Indoor rated	
Type	Model name	MCA	MFA	Input power	Current
		A	A	W	A
Low static pressure duct (High efficiency)	ARXP018GLFH	1.07	20	128	0.81
	ARXP030GLFH	1.49		228	1.31
Medium static pressure duct	ARXA024GLEH	1.00	20	94	0.60
	ARXA030GLEH	1.12		108	0.69
	ARXA036GLEH	1.68		194	1.18
	ARXA045GLEH	2.12		240	1.43
High static pressure duct	ARXC036GTEH	1.50	20	207	1.25
	ARXC045GTEH	3.77		715	3.14
Compact floor	AG∗A004GCGH	0.16	20	12/14*	0.13
	AG∗A007GCGH	0.17		16	0.14
	AG∗A009GCGH	0.18		17	0.15
	AG∗A012GCGH	0.22		22	0.18
	AG∗A014GCGH	0.28		29	0.23
Compact floor (EEV external)	AG∗E004GCEH	0.16	20	12/14*	0.13
	AG∗E007GCEH	0.17		16	0.14
	AG∗E009GCEH	0.18		17	0.15
	AG∗E012GCEH	0.22		22	0.18
	AG∗E014GCEH	0.28		29	0.23
Floor/Ceiling	AB∗A012GTEH	0.30	20	30	0.25
	AB∗A014GTEH	0.41		42	0.34
	AB∗A018GTEH	0.69		74	0.57
	AB∗A024GTEH	0.84		99	0.70
Ceiling	AB∗A030GTEH	0.52	20	66	0.43
	AB∗A036GTEH	0.66		85	0.55
	AB∗A045GTEH	0.98		131	0.81
	AB∗A054GTEH	1.32		180	1.10
Wall mounted	AS∗A004GCGH	0.15	20	12	0.12
	AS∗A007GCGH	0.20		16	0.16
	AS∗A009GCGH	0.22		20	0.18
	AS∗A012GCGH	0.30		25	0.25
	AS∗A014GCGH	0.36		36	0.30
	AS∗A18GBCH	0.40		32	0.33
	AS∗A24GBCH	0.63		60	0.52
	AS∗A030GTEH	0.66		74	0.55
	AS∗A034GTEH	0.87		103	0.72
Wall mounted (EEV external)	AS∗E004GCEH	0.15	20	12	0.12
	AS∗E007GCEH	0.20		16	0.16
	AS∗E009GCEH	0.22		20	0.18
	AS∗E012GCEH	0.30		25	0.25
	AS∗E014GCEH	0.36		36	0.30

MCA: Minimum Circuit Ampacity = Maximum operating current (Full load)
MFA: Main Fuse (circuit breaker) Ampacity
*: This value is “Cooling operation/Heating operation”.

INDOOR UNITS

4. Dimensions

4-1. Compact cassette type

■ Models: AUXB004GLEH, AUXB007GLEH, AUXB009GLEH, AUXB012GLEH, AUXB014GLEH, AUXB018GLEH, and AUXB024GLEH

Unit: mm

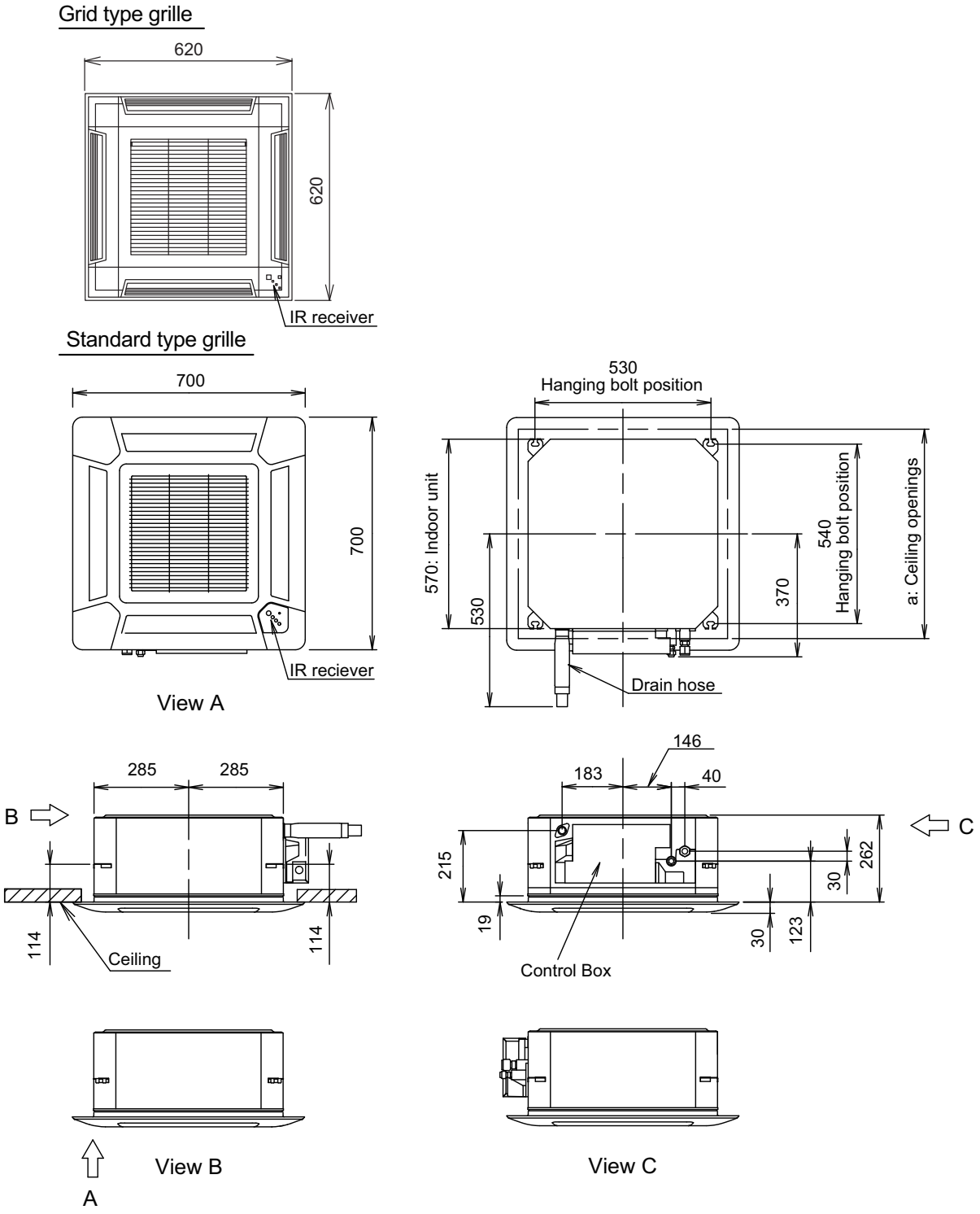

a: Ceiling openings			
Cassette grille	Standard type	mm	580 to 660
	Grid type		580 to 610

■ Installation space

Unit: mm

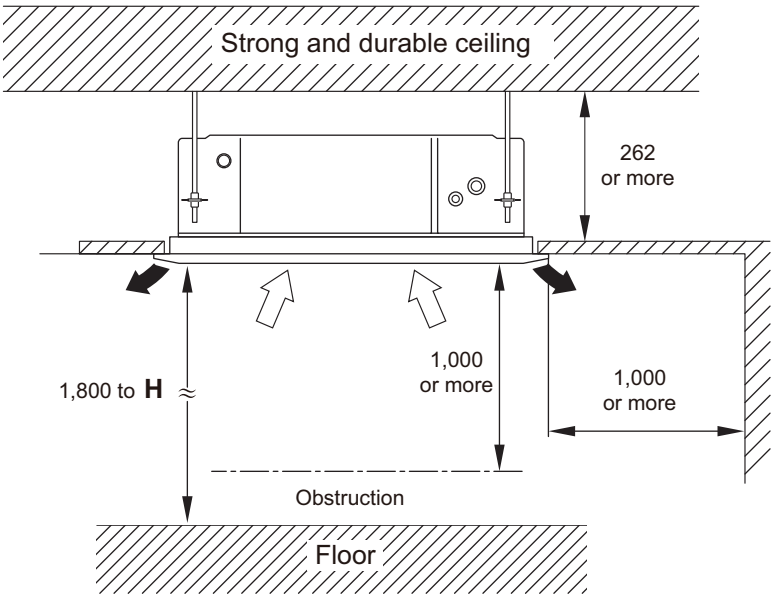

Be sure to make function setting with the remote controller according to the installed ceiling height.

H: The maximum height from floor to ceiling (mm)							
Ceiling height	Model code						
	04	07	09	12	14	18	24
Standard	2,700						
High ceiling	—			3,000			

● Installation notices

- When installing the indoor unit, be careful about the maintenance space.
- To set “3-direction”, Air outlet shutter plate (option) must be installed, and the “outlet-direction” need to be switched to “3-way” by the remote controller.

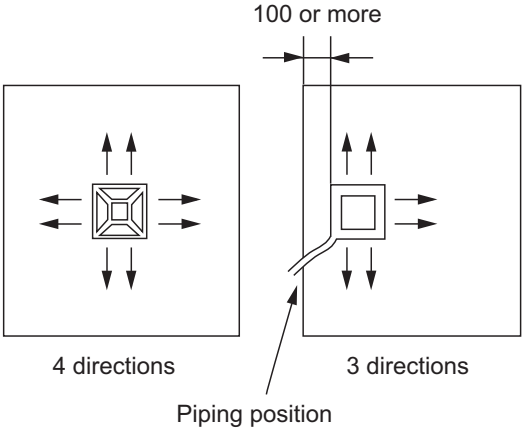

- In 3-way outlet mode, changing of ceiling height setting by function setting 20 is prohibited. (Ceiling height setting [function setting 20] is allowed to be changed only in 4-way outlet mode.)
- Use the Insulation kit for high humidity (option), when the condition under the roof is over 80% in humidity and over 30°C in temperature. Otherwise, there is a risk of condensation on the ceiling.

INDOOR UNITS

4-2. 4-way flow cassette type

■ Models: AUXD18GALH and AUXD24GALH

Unit: mm

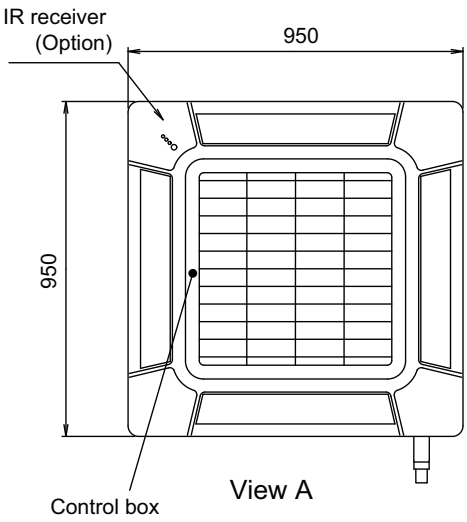

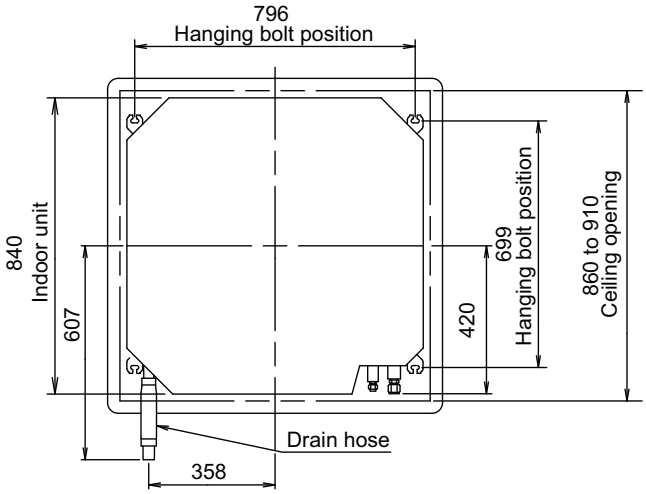

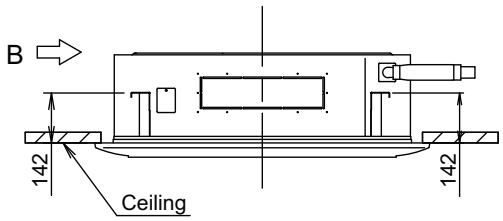

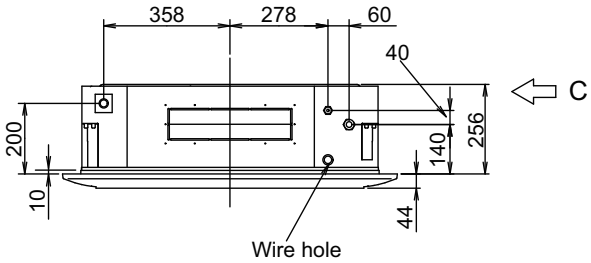

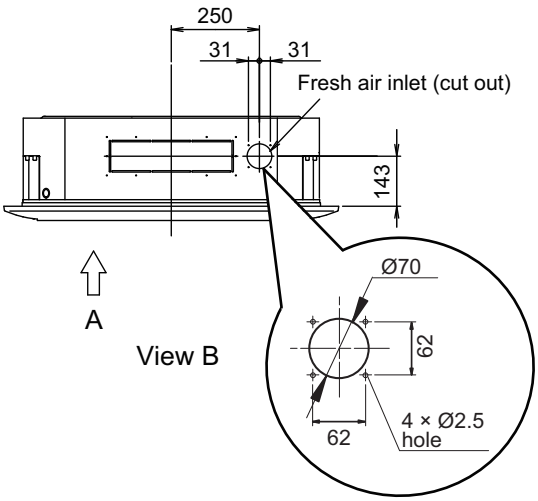

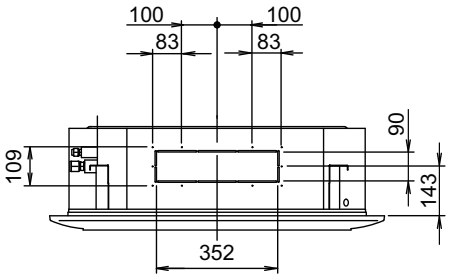

■ Models: AUXA30GALH, AUXA34GALH, AUXA36GALH, AUXA45GALH, and AUXA54GALH

Unit: mm

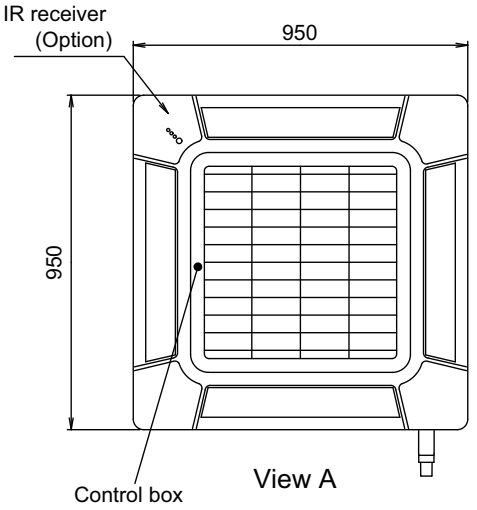

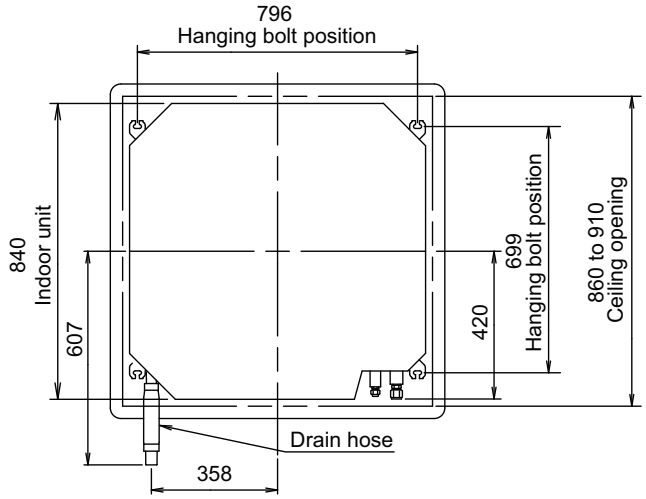

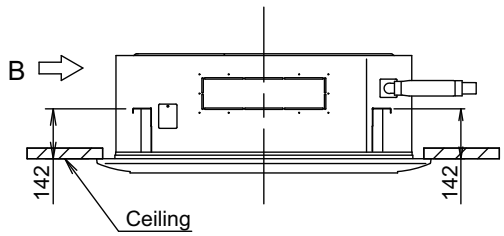

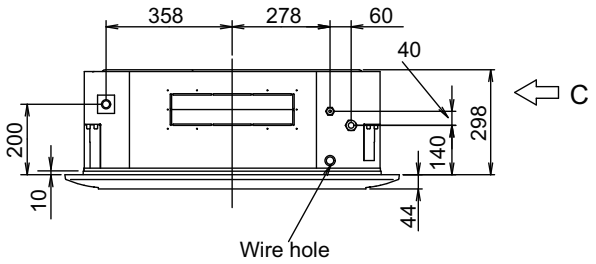

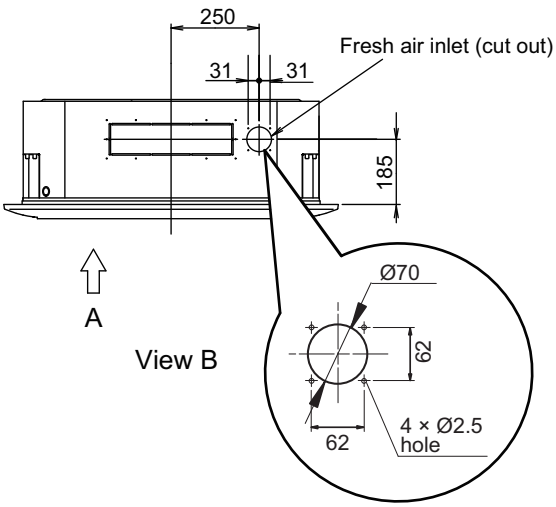

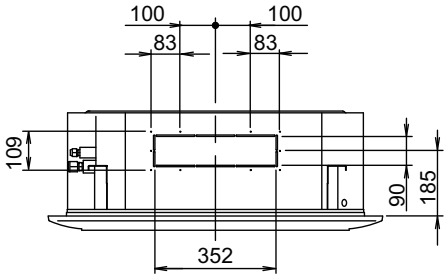

■ Installation space requirement

Unit: mm

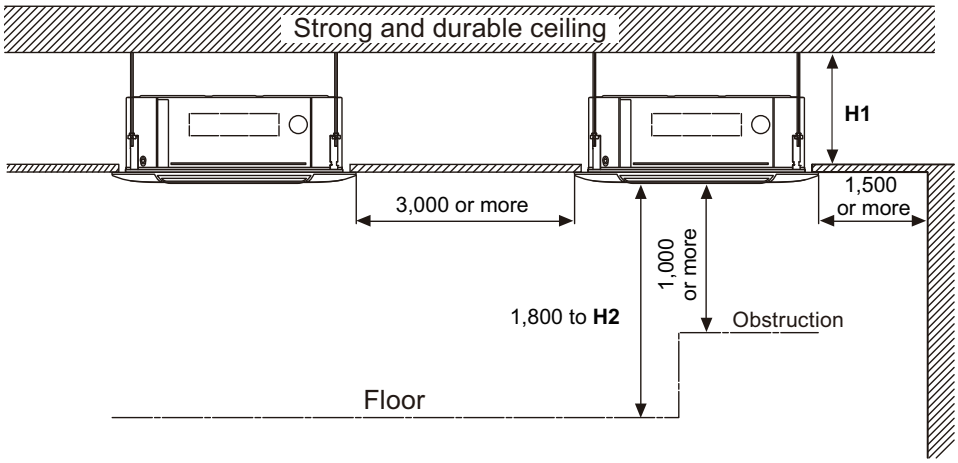

Model name	H1: Attic height (mm)
AUXD18GALH, AUXD24GALH	256 or more
AUXA30GALH, AUXA34GALH, AUXA36GALH, AUXA45GALH, AUXA54GALH	298 or more

Be sure to make function setting with the remote controller according to the installed ceiling height.

H2: The maximum height from floor to ceiling (mm)			
Ceiling height	Model name		
	AUXD18GALH, AUXD24GALH	AUXA30GALH, AUXA34GALH	AUXA36GALH, AUXA45GALH, AUXA54GALH
Standard	3,000	3,200	
High ceiling	3,500	3,600	4,200

● Installation notices

- When installing the indoor unit, be careful about the maintenance space.
- To set “3-direction”, Air outlet shutter plate (option) must be installed, and the “outlet-direction” need to be switched to “3-way” by the remote controller.

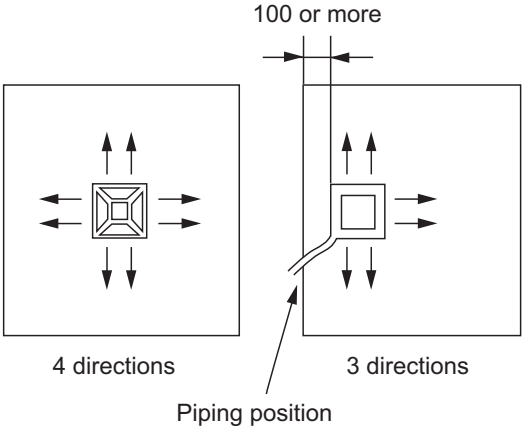

- In 3-way outlet mode, changing of ceiling height setting by function setting 20 is prohibited. (Ceiling height setting [function setting 20] is allowed to be changed only in 4-way outlet mode.)
- Use the Insulation kit for high humidity (option), when the condition under the roof is over 80% in humidity and over 30°C in temperature. Otherwise, there is a risk of condensation on the ceiling.

INDOOR UNITS

4-3. Circular flow cassette type

■ Models: AUXN009GLAH, AUXN012GLAH, AUXN014GLAH, AUXM018GLEH, AUXM024GLEH, and AUXM030GLEH

Unit: mm

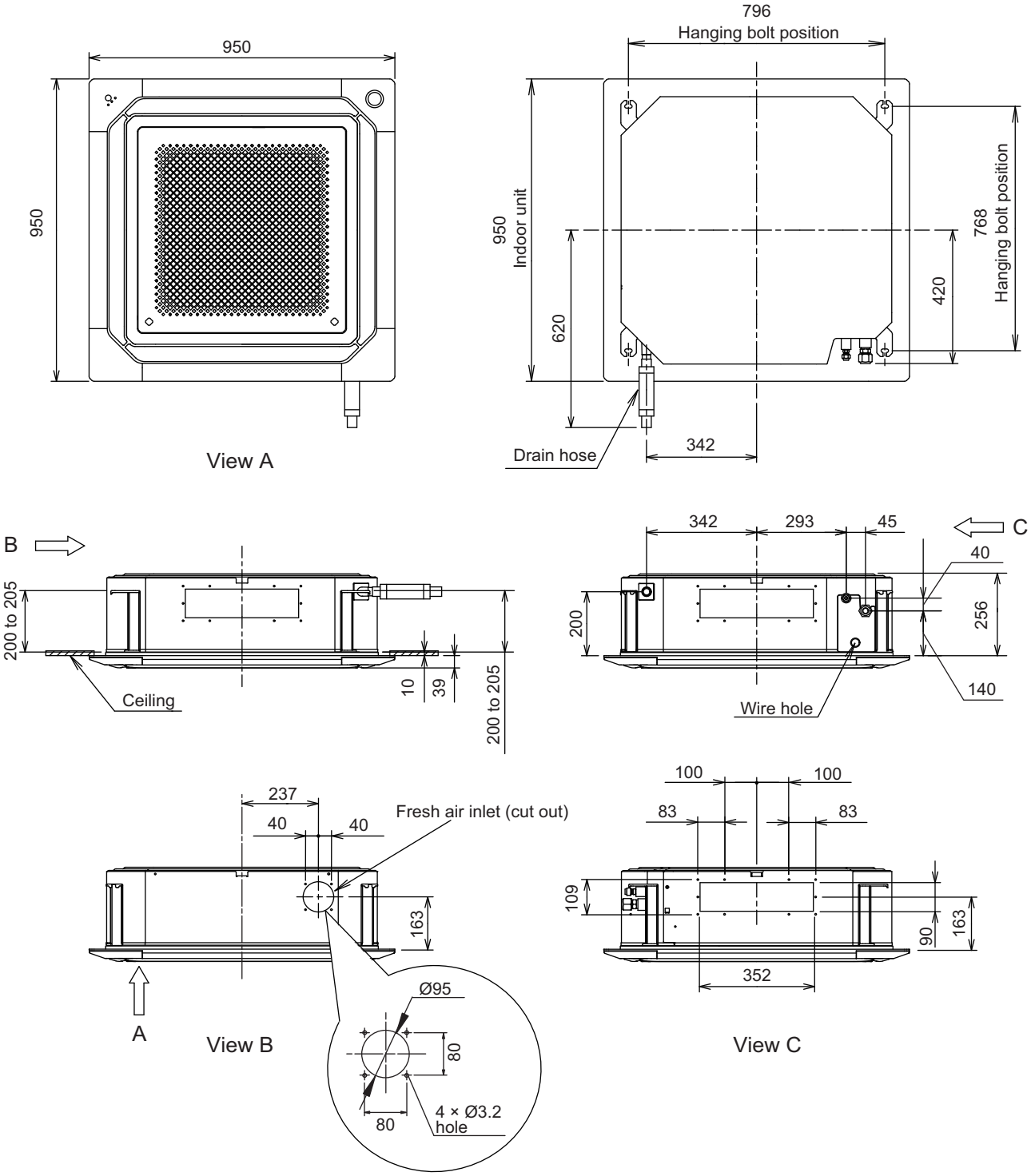

■ Models: AUXK018GLEH, AUXK024GLEH, AUXK030GLEH, AUXK034GLEH, AUXK036GLEH, AUXK045GLEH, and AUXK054GLEH

Unit: mm

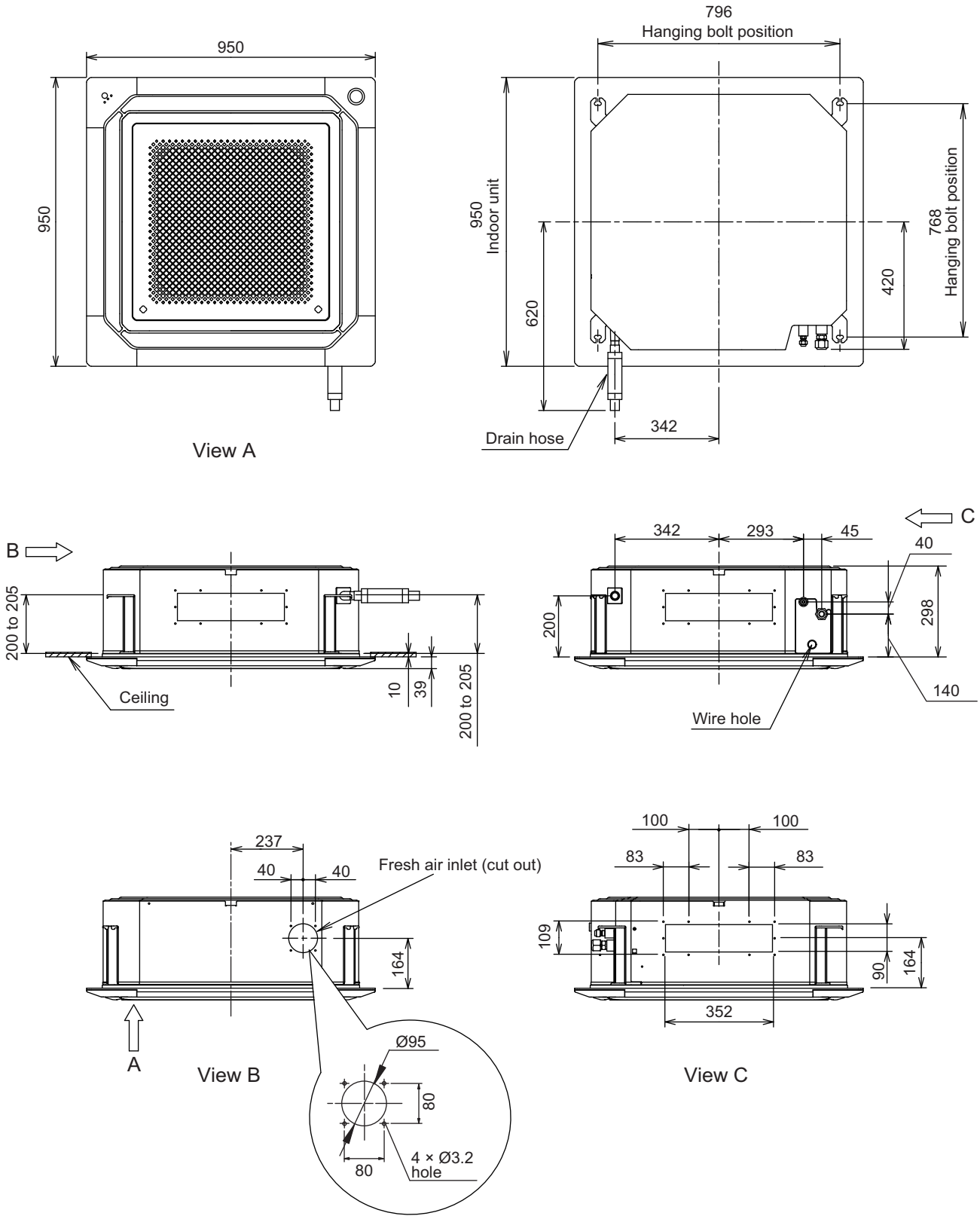

INDOOR UNITS

■ Installation space requirement

Unit: mm

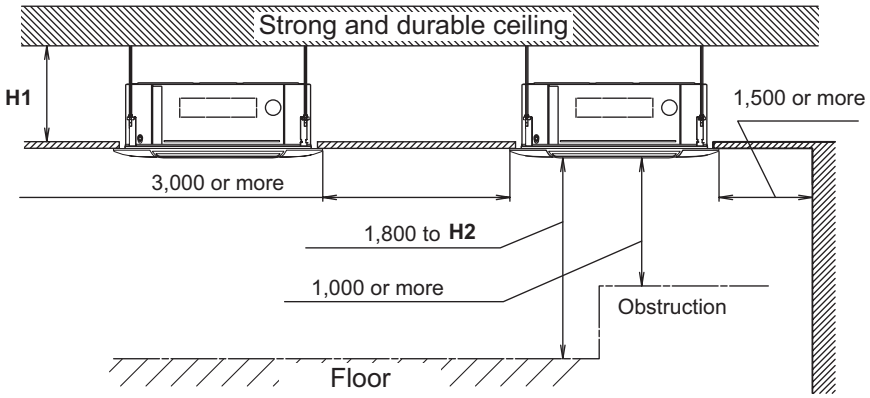

Model name	H1: Attic height (mm)
AUXN009-014GLEH and AUXM018-030GLEH	256 or more
AUXK018-054GLEH	298 or more

Be sure to make function setting with the remote controller according to the installed ceiling height.

H2: The maximum height from floor to ceiling (mm)			
Ceiling height	Model name		
	AUXN009-014GLEH and AUXM018-030GLEH	AUXK018-034GLEH	AUXK036-054GLEH
Standard	3,000	3,200	
High ceiling	3,500	3,600	4,200

● Installation notices

- When installing the indoor unit, be careful about the maintenance space.
- To set “3-direction”, Air outlet shutter plate (option) must be installed, and the “outlet-direction” need to be switched to “3-way” by the remote controller.

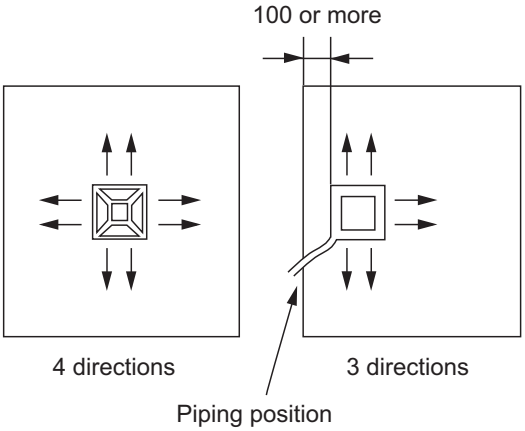

- In 3-way outlet mode, changing of ceiling height setting by function setting 20 is prohibited. (Ceiling height setting [function setting 20] is allowed to be changed only in 4-way outlet mode.)
- Use the Insulation kit for high humidity (option), when the condition under the roof is over 80% in humidity and over 30°C in temperature. Otherwise, there is a risk of condensation on the ceiling.

INDOOR UNITS

4-4. 3D flow cassette type

■ Models: AUXS018GLEH and AUXS024GLEH

Unit: mm

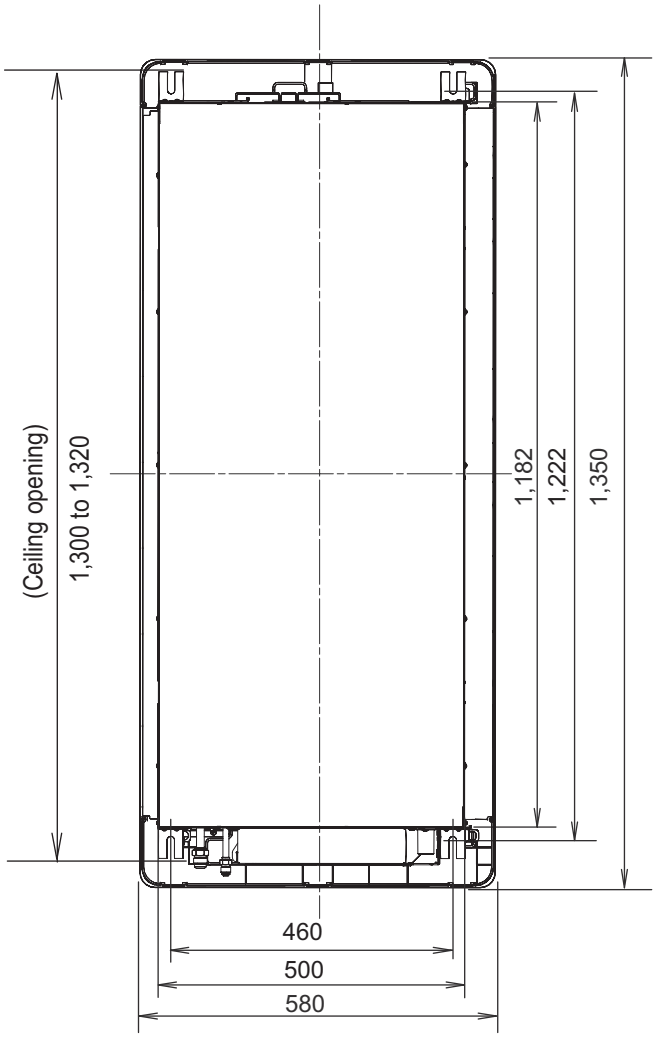

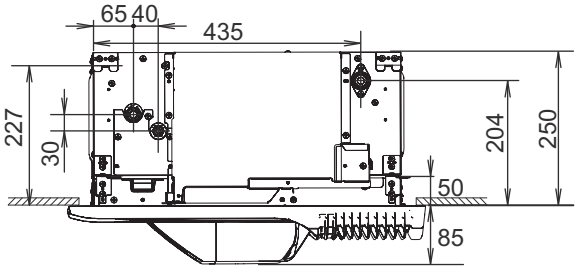

INDOOR UNITS

■ Installation space requirement

Provide sufficient installation space for product safety.

Unit: mm

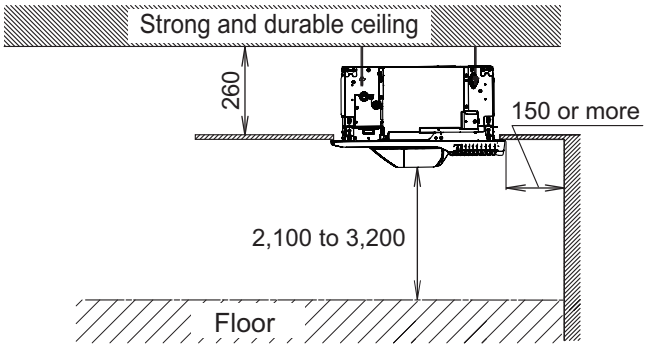

Side view

Be sure to make function setting with the remote controller according to the installed ceiling height.

H: The maximum height from floor to ceiling (mm)	
Ceiling height	Model name
	AUXS018GLEH and AUXS024GLEH
Standard	2,300
High ceiling	3,200

● Installation notices

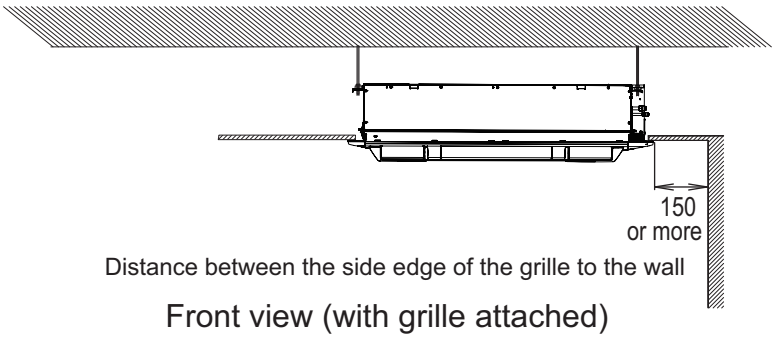

Distance between the side edge of the grille to the wall

Front view (with grille attached)

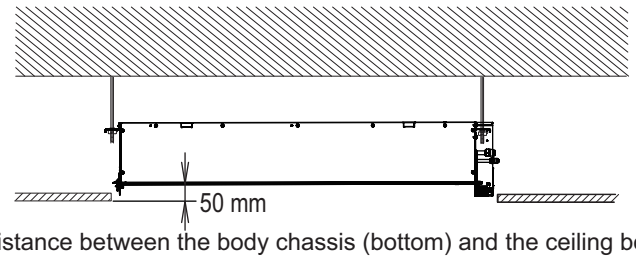

Distance between the body chassis (bottom) and the ceiling board

Front view

INDOOR UNITS

4-5. One way flow cassette type

■ Models: AUXV004GLEH, AUXV007GLEH, AUXV009GLEH, and AUXV012GLEH

Unit: mm

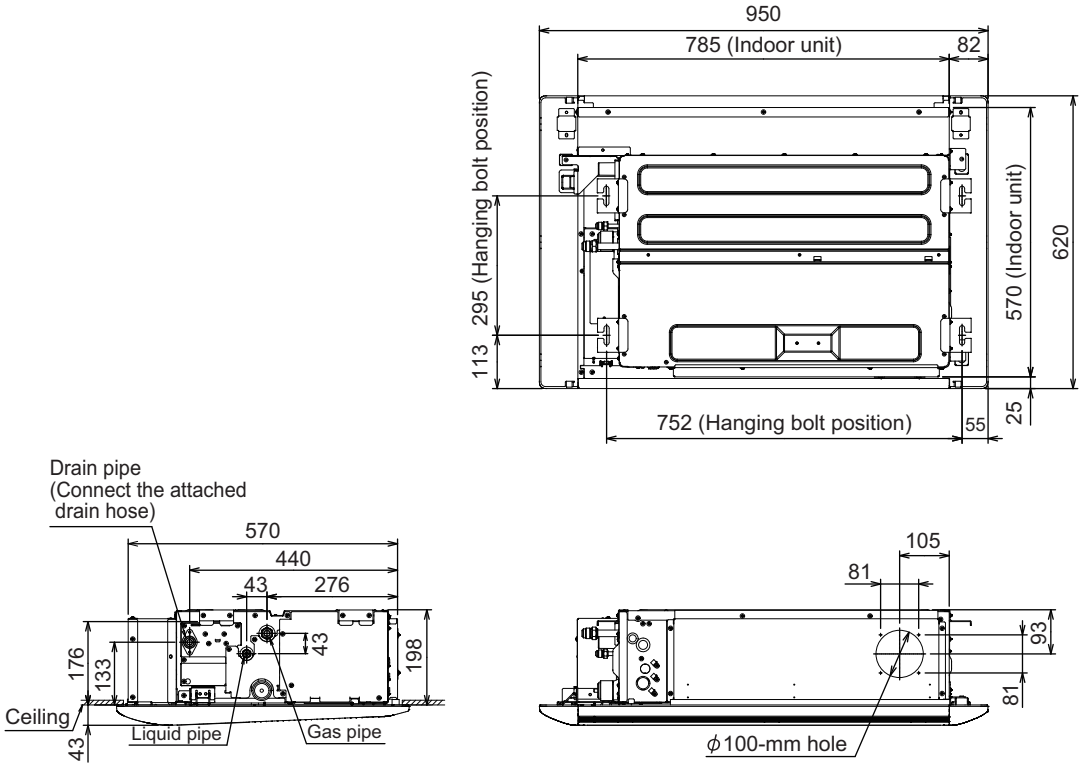

INDOOR UNITS

■ Models: AUXV014GLEH, AUXV018GLEH, and AUXV024GLEH

Unit: mm

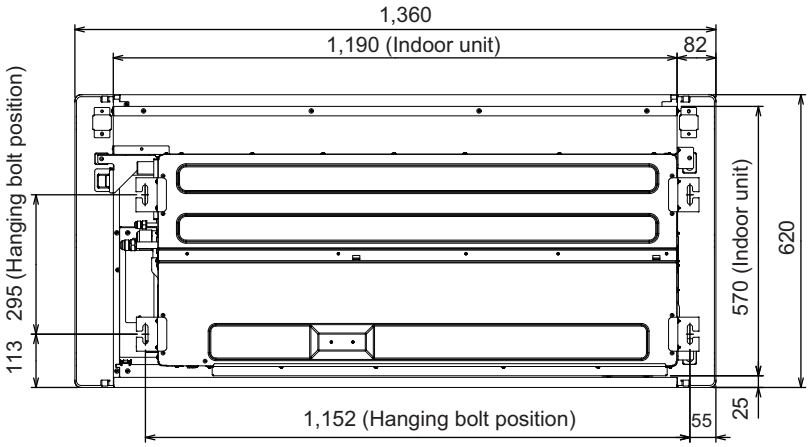

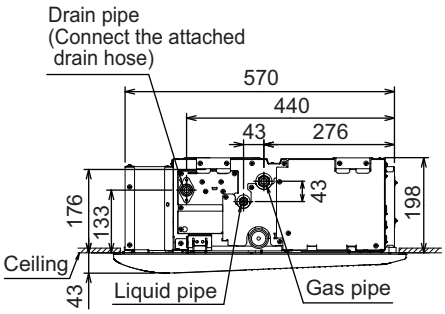

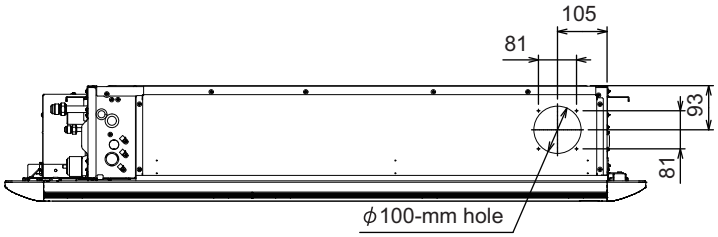

INDOOR UNITS

INDOOR UNITS

■ Installation space requirement

Provide sufficient installation space for product safety.

Unit: mm

Front view

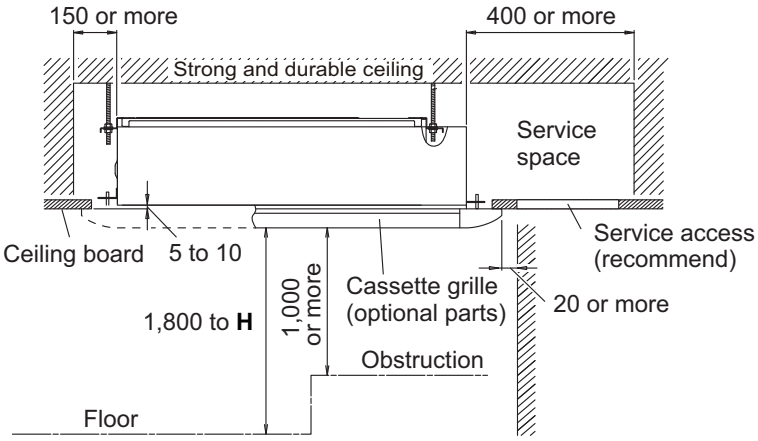

Be sure to make function setting with the remote controller according to the installed ceiling height.

Ceiling height	H: The maximum height from floor to ceiling (mm)
Standard	2,700
High ceiling	3,200

Right side view

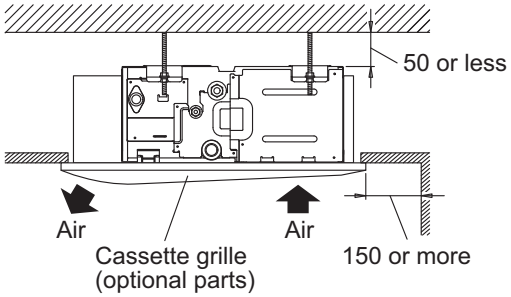

INDOOR UNITS

4-6. Low static pressure duct (Mini duct) type

■ Models: ARXK004GLGH, ARXK007GLGH, ARXK009GLGH, ARXK012GLGH, and ARXK014GLGH

Unit: mm

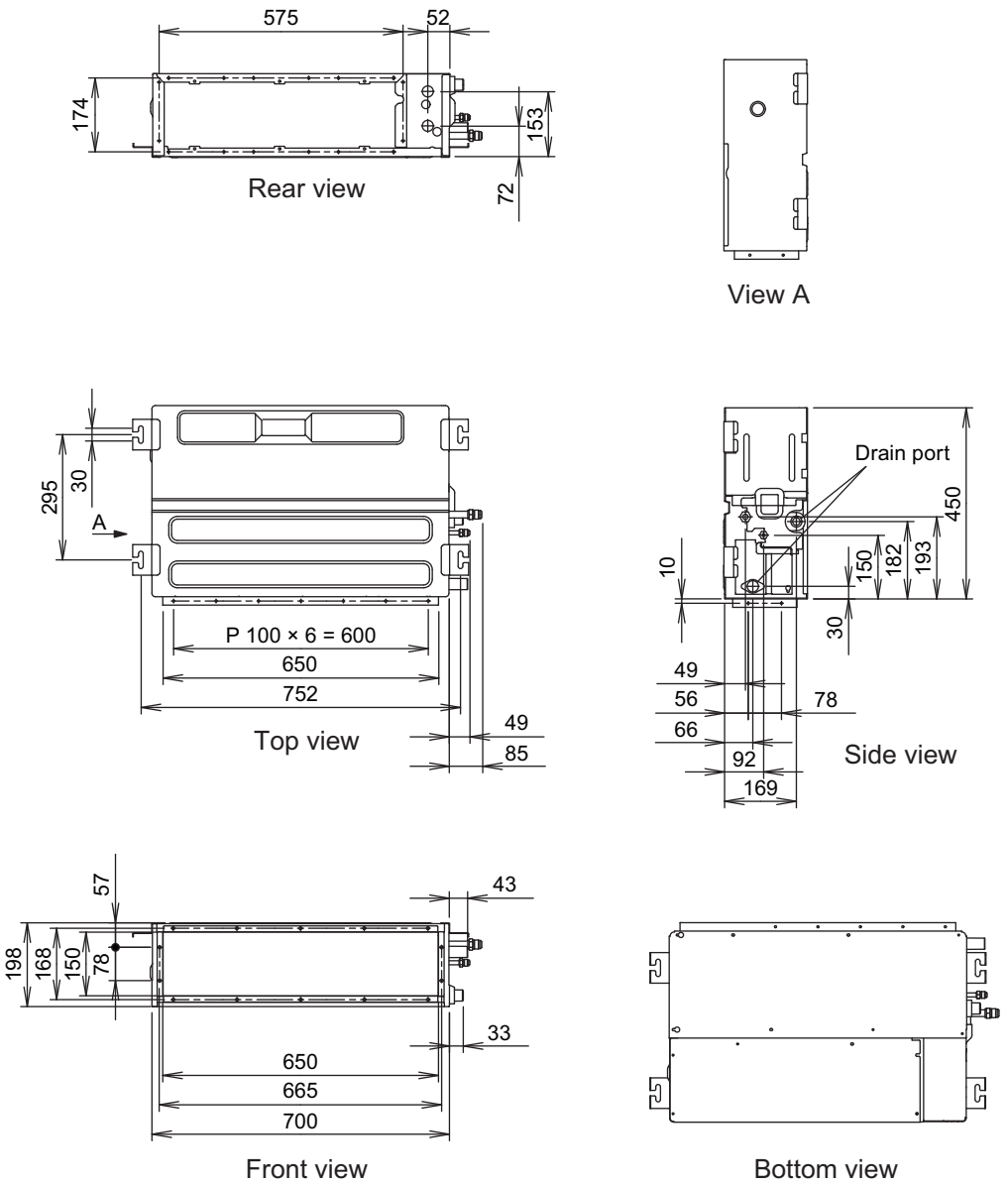

■ Model: ARXK018GLGH

Unit: mm

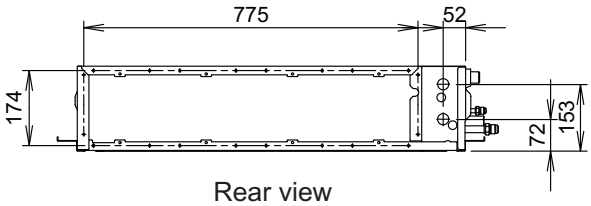

Rear view

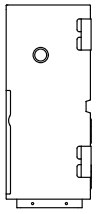

View A

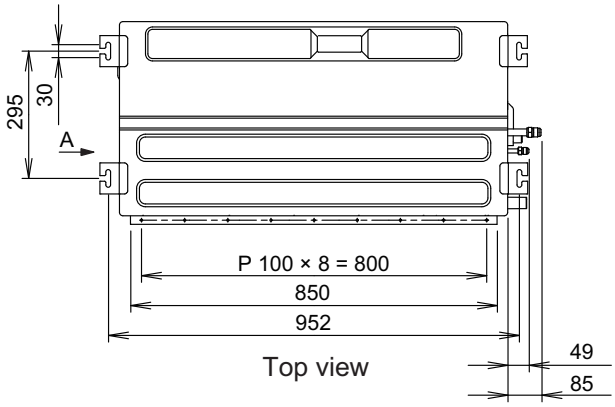

Top view

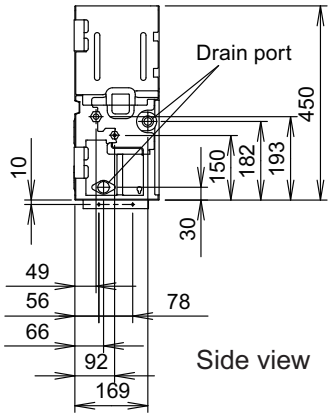

Side view

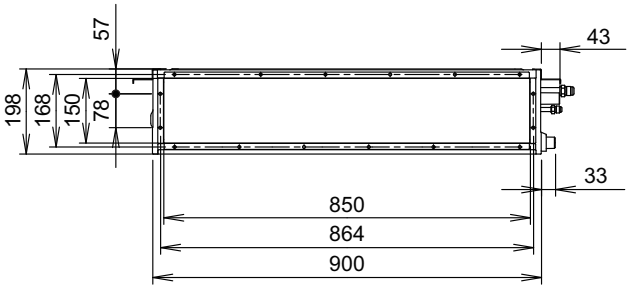

Front view

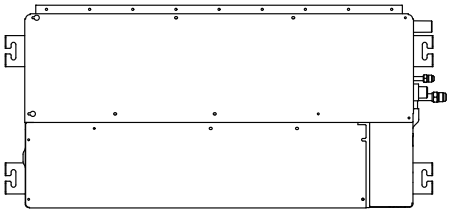

Bottom view

■ Model: ARXK024GLGH

Unit: mm

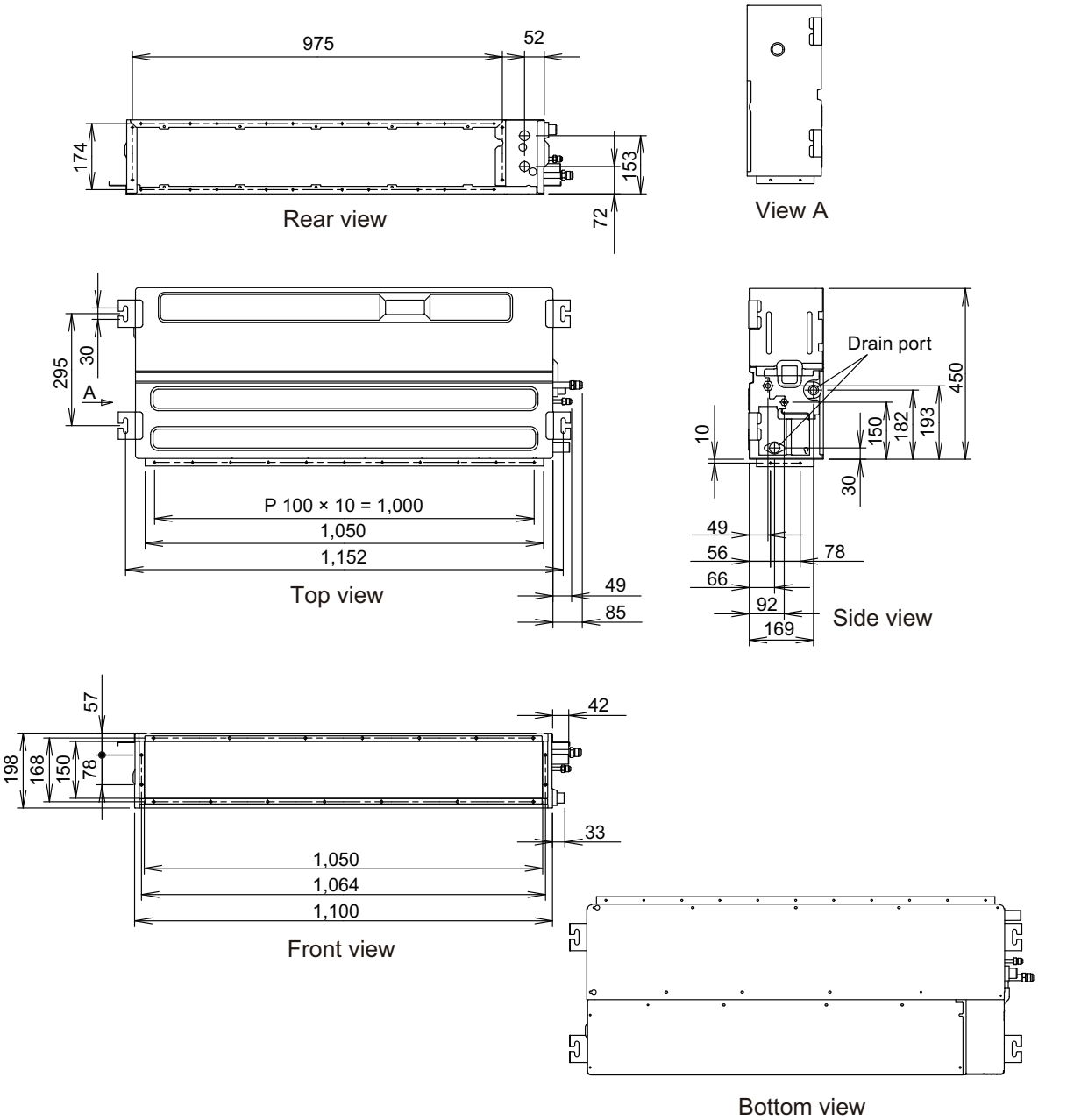

INDOOR UNITS

■ Installation space requirement

Provide sufficient installation space for product safety.

Unit: mm

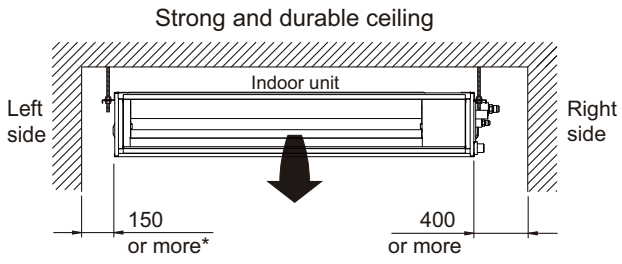

*: 400 or more when drain from drain pipe

- **When intaking air from back:**

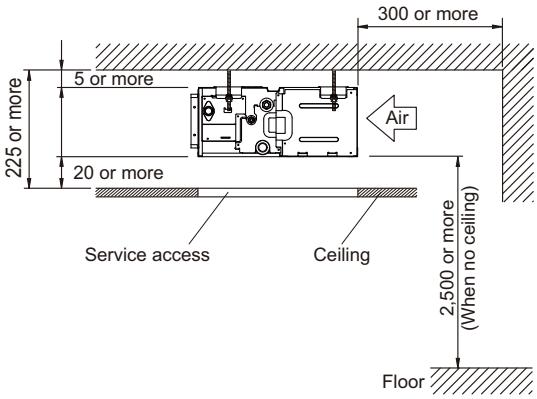

- **When intaking air from bottom:**

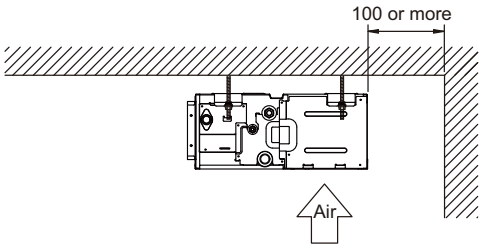

■ Maintenance space requirement

For future maintenance and service access, provide sufficient maintenance space.

NOTE: Do not place any wiring or illumination in the maintenance space, as they will impede service.

Unit: mm

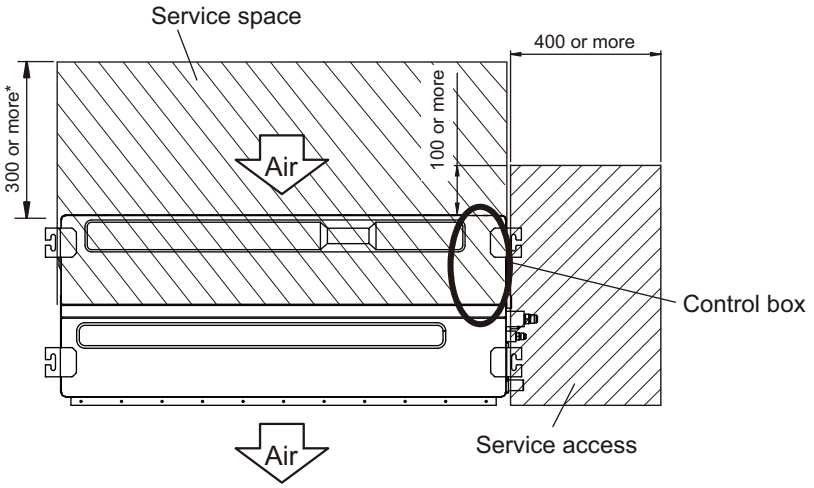

*: More than 100 when intaking air from bottom

Top view

INDOOR UNITS

4-7. Low static pressure duct (Slim duct)/Slim concealed floor type

■ Models: ARXD007GLEH, ARXD009GLEH, ARXD012GLEH, and ARXD014GLEH

Unit: mm

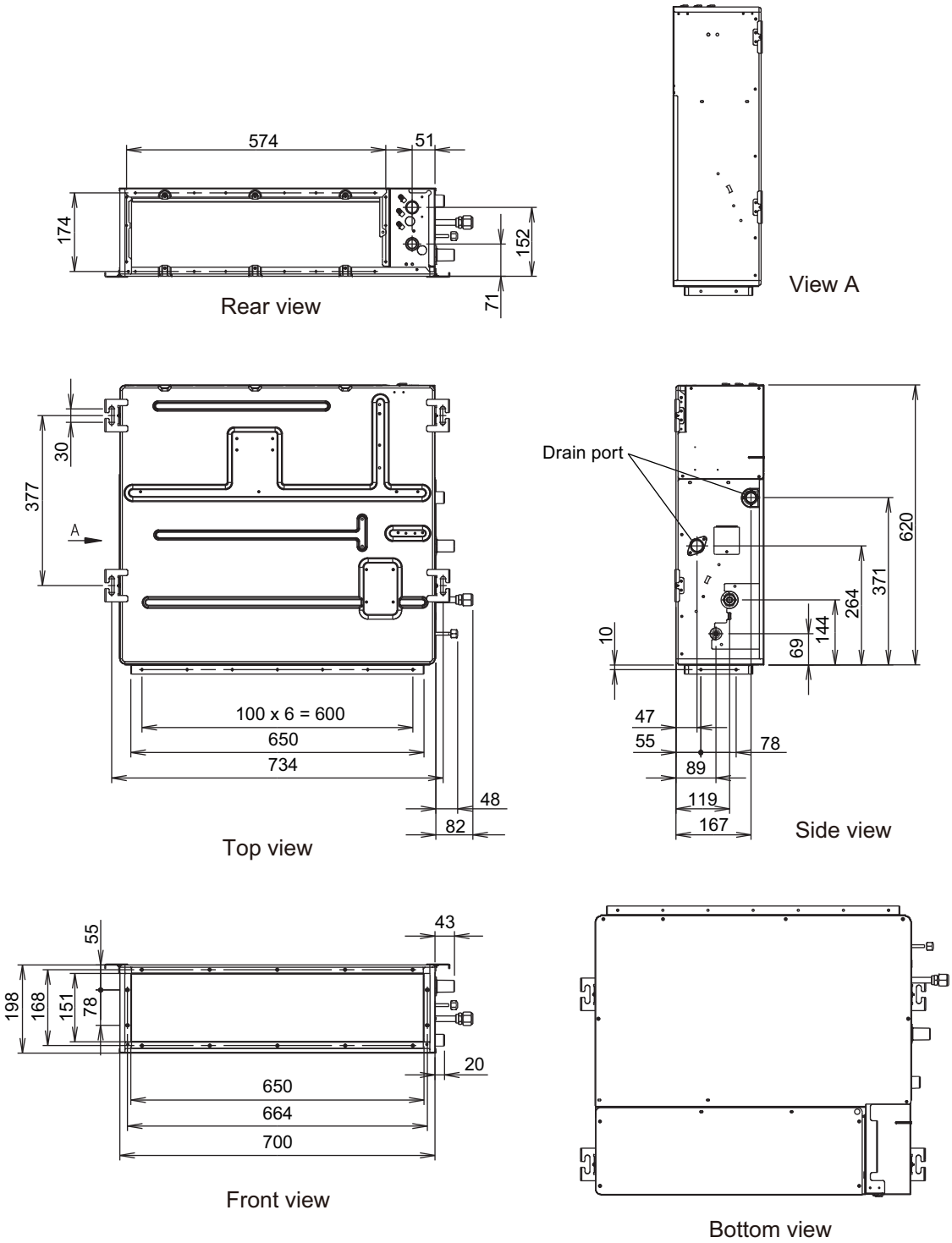

■ Model: ARXD018GLEH

Unit: mm

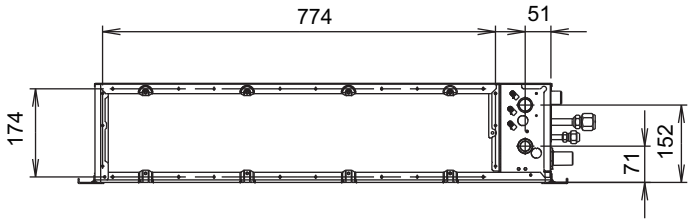

Rear view

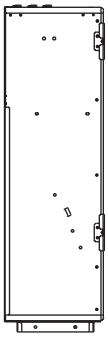

View A

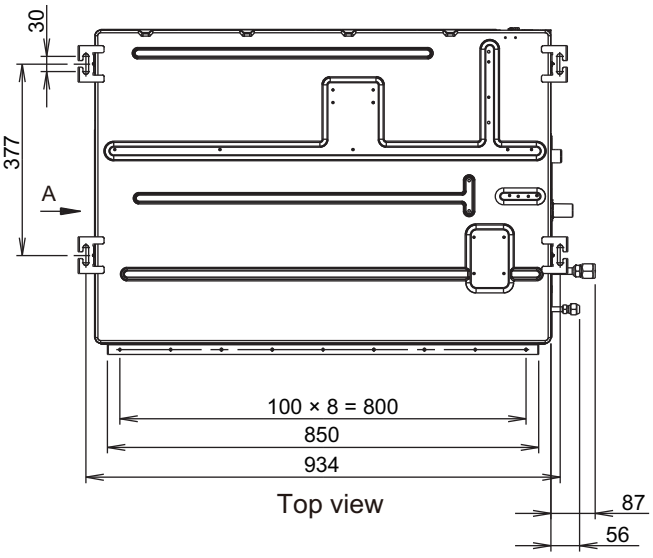

Top view

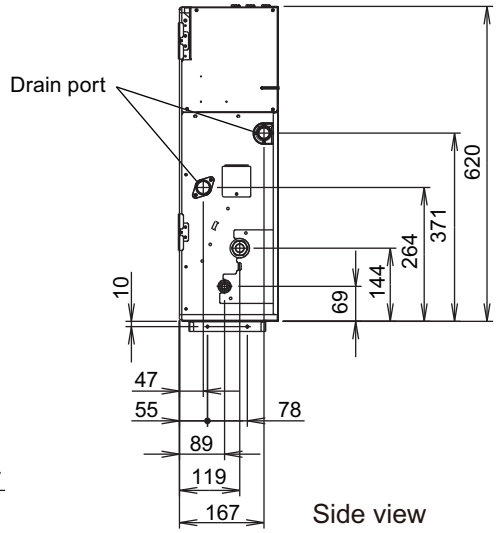

Side view

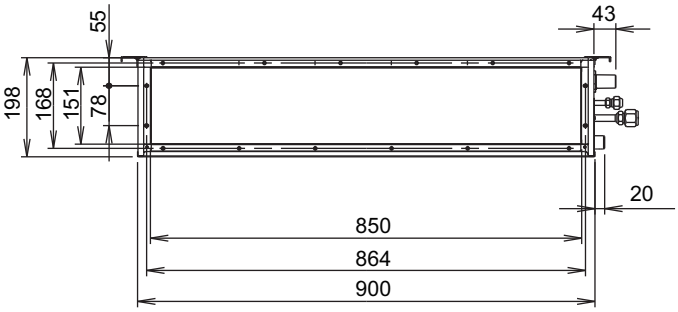

Front view

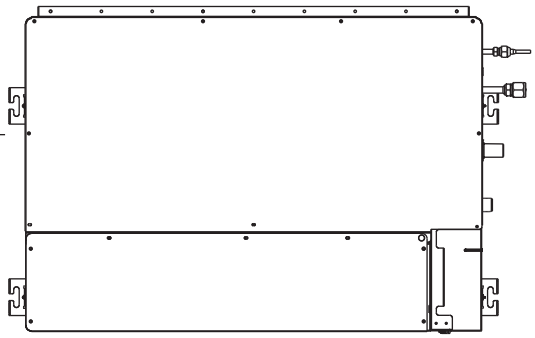

Bottom view

■ Model: ARXD024GLEH

Unit: mm

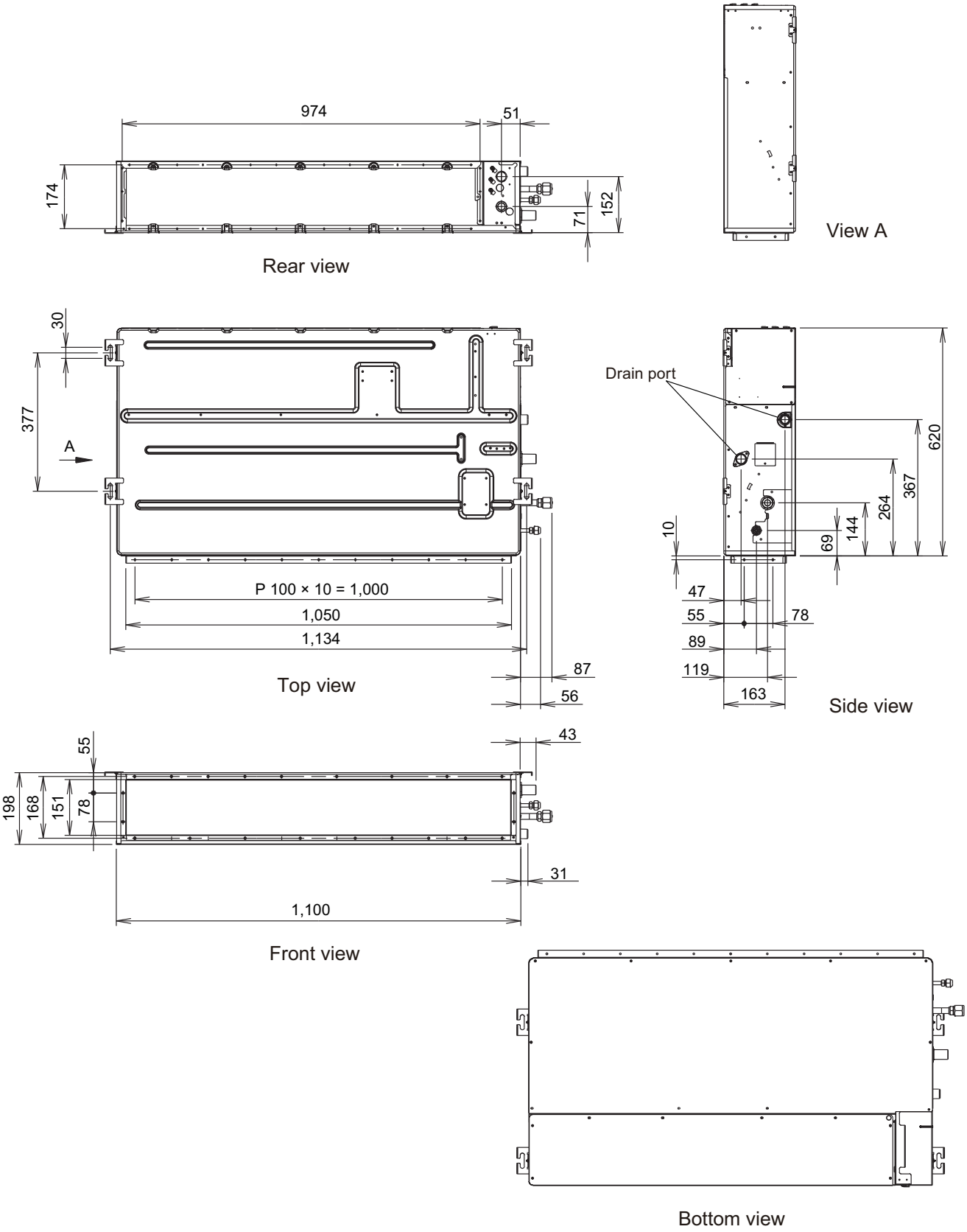

INDOOR UNITS

■ Installation space requirement

Unit: mm

In ceiling-concealed installations:

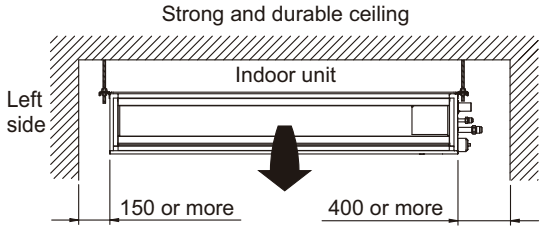

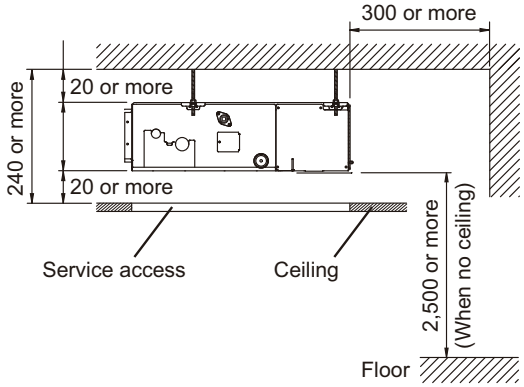

In wall-concealed installations:

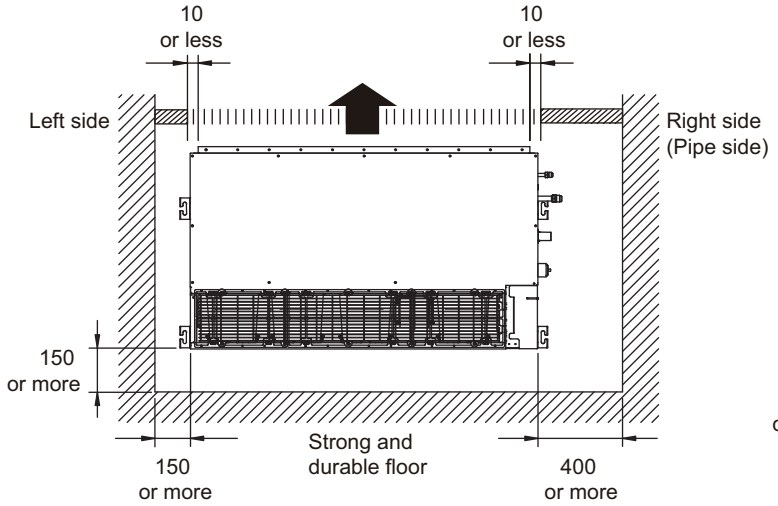

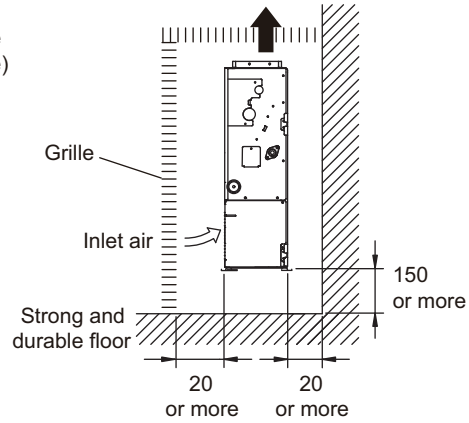

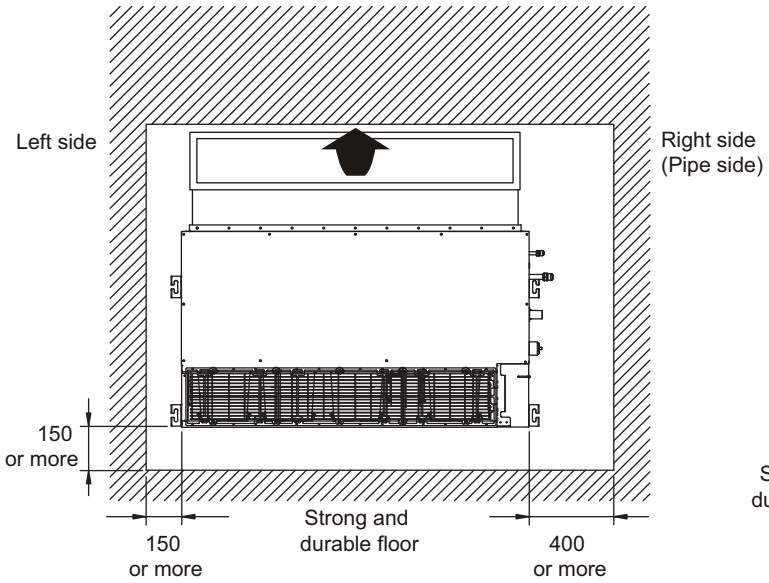

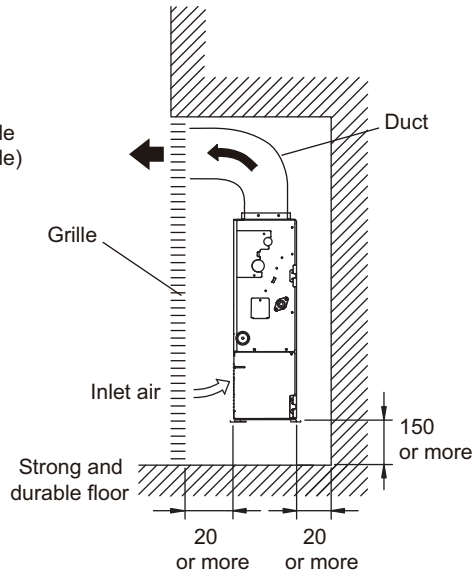

■ Maintenance space requirement

For future maintenance and service access, provide sufficient maintenance space.

NOTE: Do not place any wiring or illumination in the maintenance space, as they will impede service.

Unit: mm

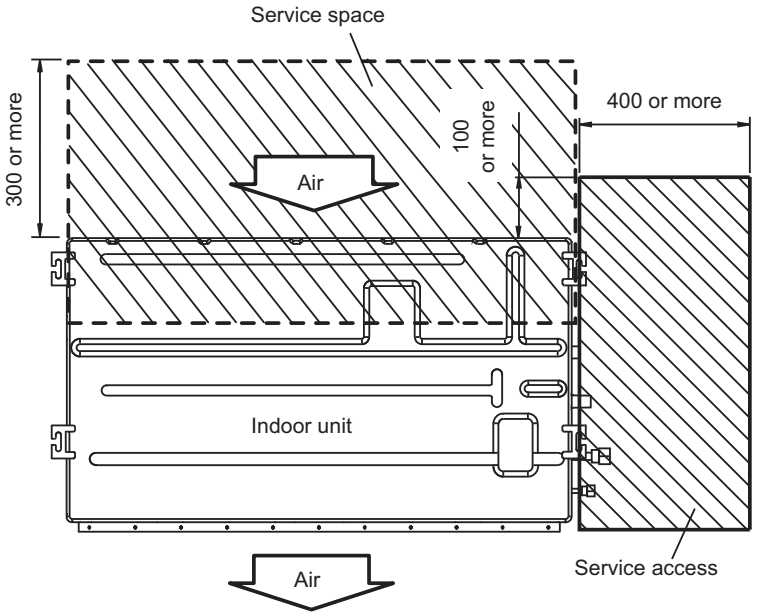

Top view

INDOOR UNITS

4-8. Low static pressure duct type (High efficiency)

■ Models: ARXP018GLFH and ARXP030GLFH

Unit: mm

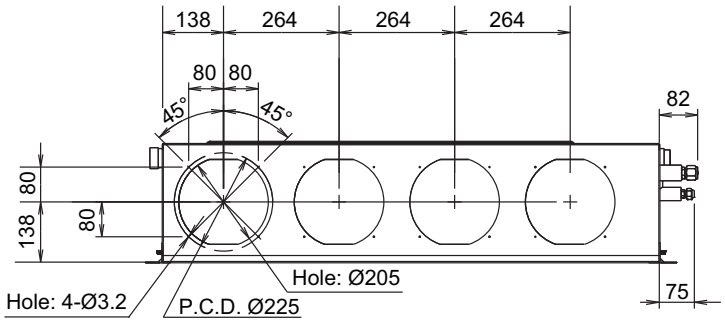

Front view

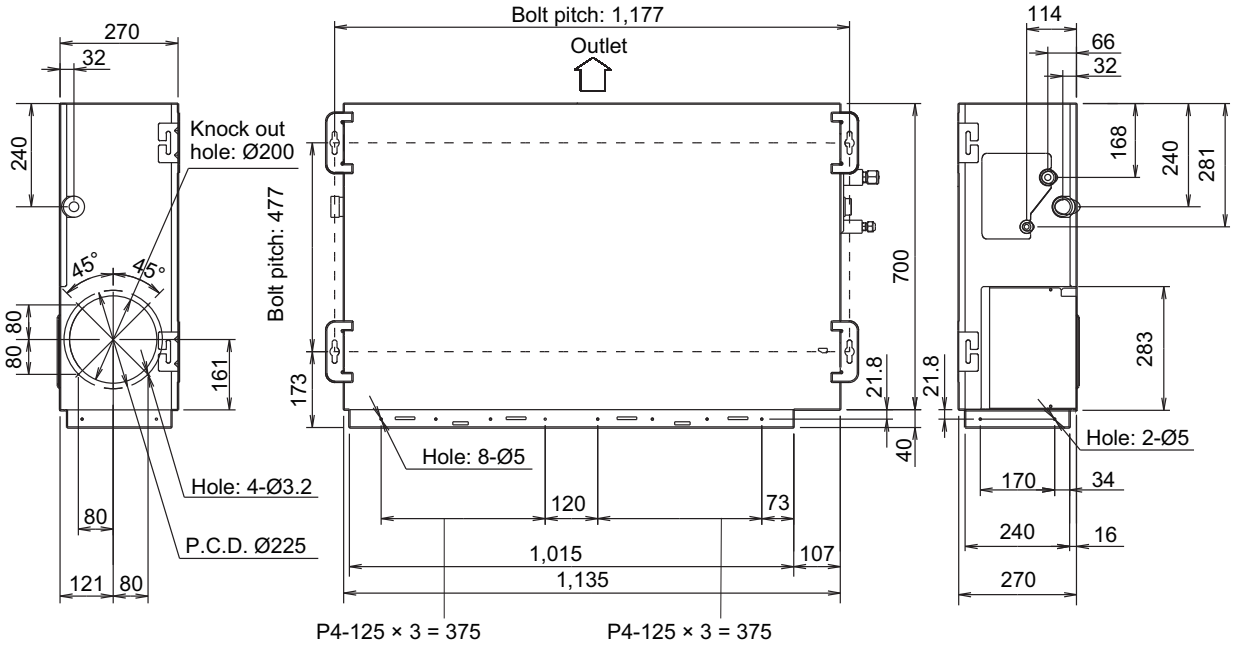

Side view (L) Top view Side view (R)

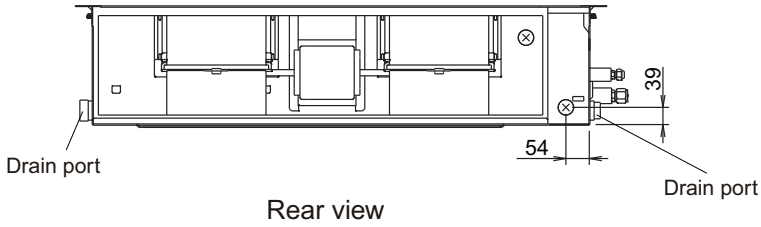

Rear view

■ Installation space requirement

Unit: mm

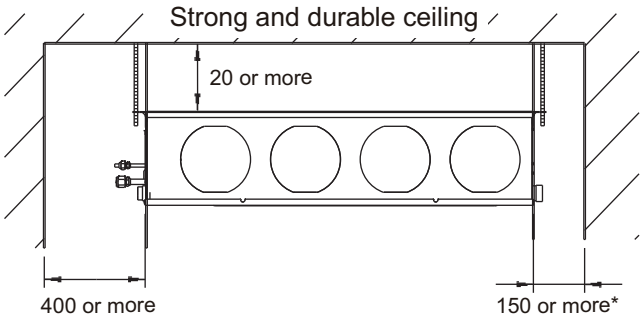

NOTES:

- When Drain pump unit is used, leave the space requirement for service and maintenance. For details of Drain pump unit, refer to "Drain pump unit for duct type" in Chapter 10. OPTIONAL PARTS on page 10-23.
- *: When drain hose is connected, the required dimension is 400 mm or more.

■ Maintenance space requirement

For future maintenance and service access, provide sufficient maintenance space.

NOTE: Do not place any wiring or illumination in the maintenance space, as they will impede service.

Unit: mm

It shall be possible to install and remove the control box.

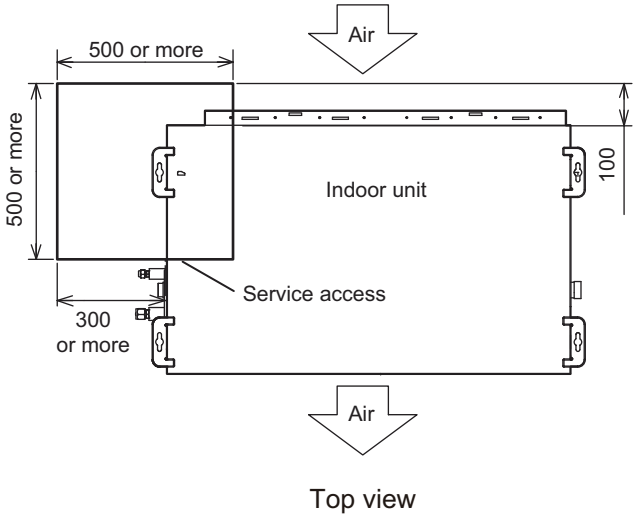

It shall be possible to install and remove the control box, fan units, and filter.

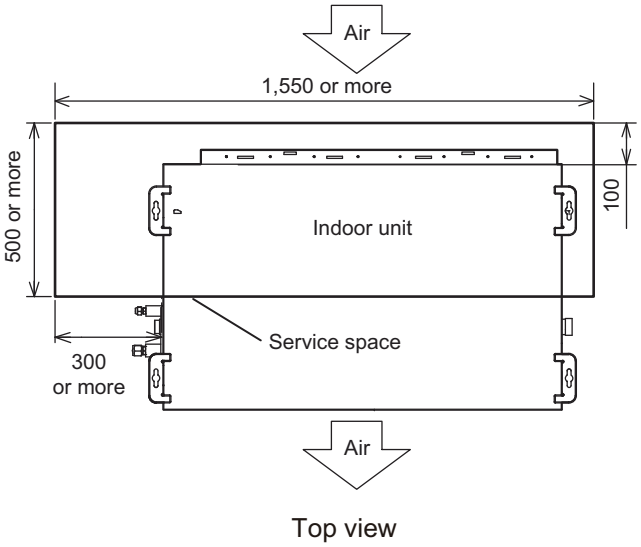

When using a square duct

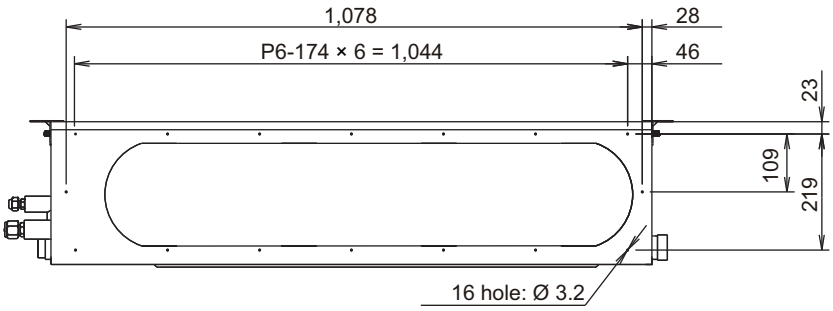

4-9. Medium static pressure duct type

■ Models: ARXA024GLEH, ARXA030GLEH, ARXA036GLEH, and ARXA045GLEH

Unit: mm

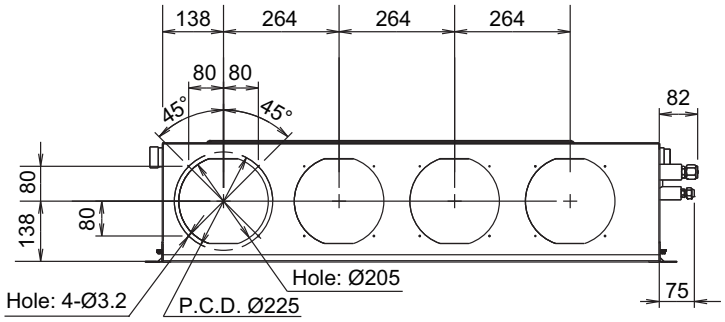

Front view

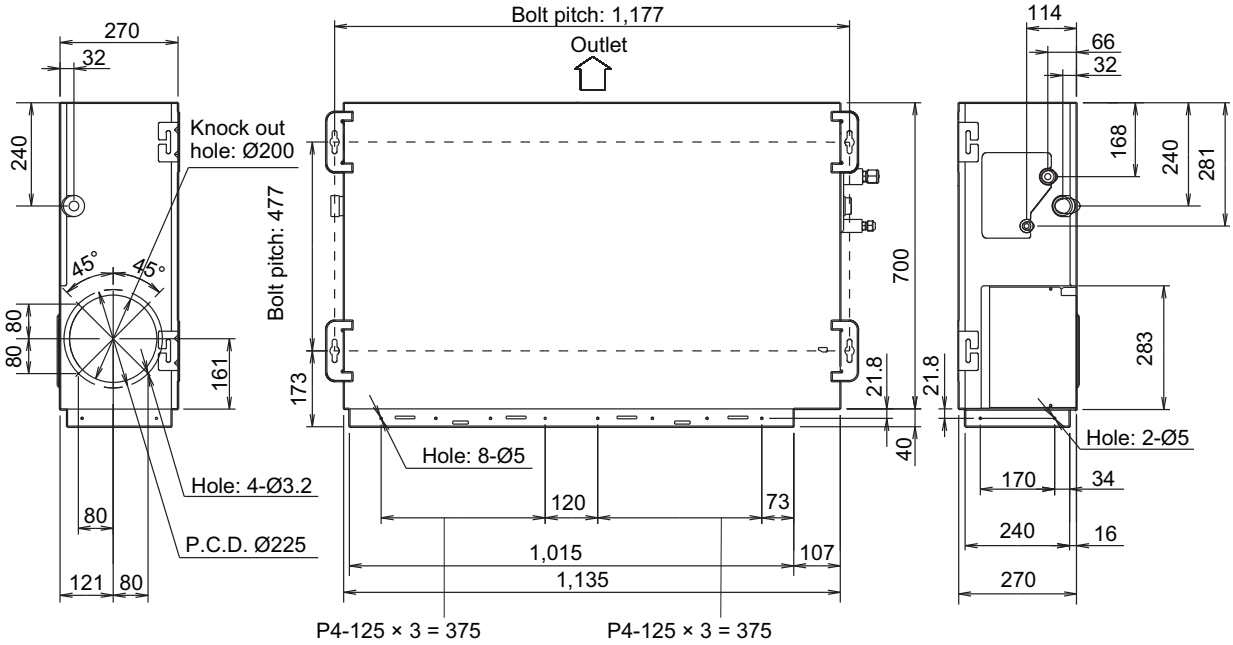

Side view (L) Top view Side view (R)

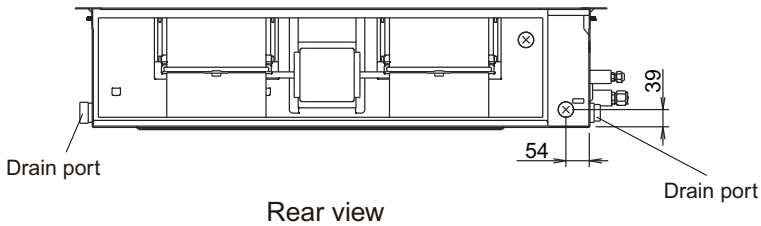

Rear view

■ Installation space requirement

Unit: mm

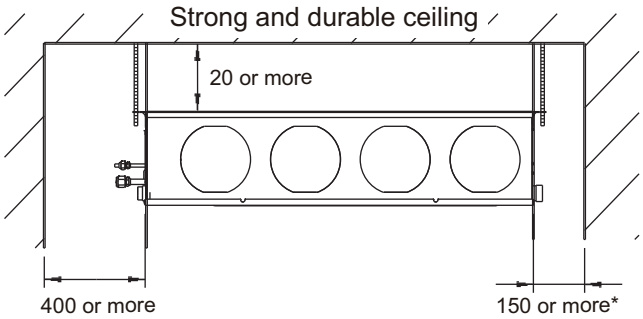

NOTES:

- When Drain pump unit is used, leave the space requirement for service and maintenance. For details of Drain pump unit, refer to "Drain pump unit for duct type" in Chapter 10. OPTIONAL PARTS on page 10-23.
- *: When drain hose is connected, the required dimension is 400 mm or more.

■ Maintenance space requirement

For future maintenance and service access, provide sufficient maintenance space.

NOTE: Do not place any wiring or illumination in the maintenance space, as they will impede service.

Unit: mm

It shall be possible to install and remove the control box.

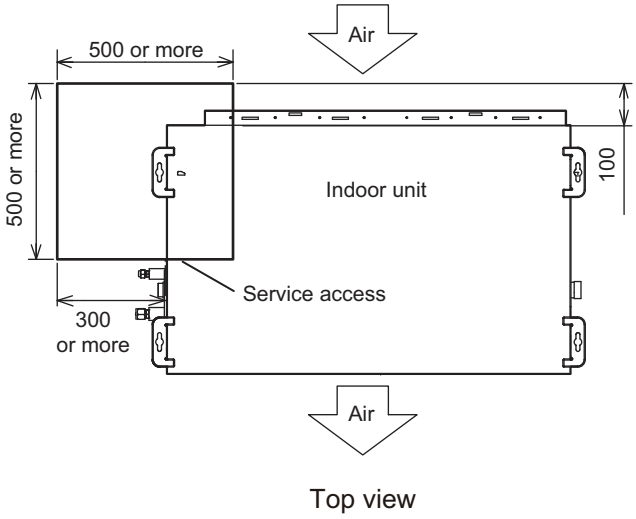

It shall be possible to install and remove the control box, fan units, and filter.

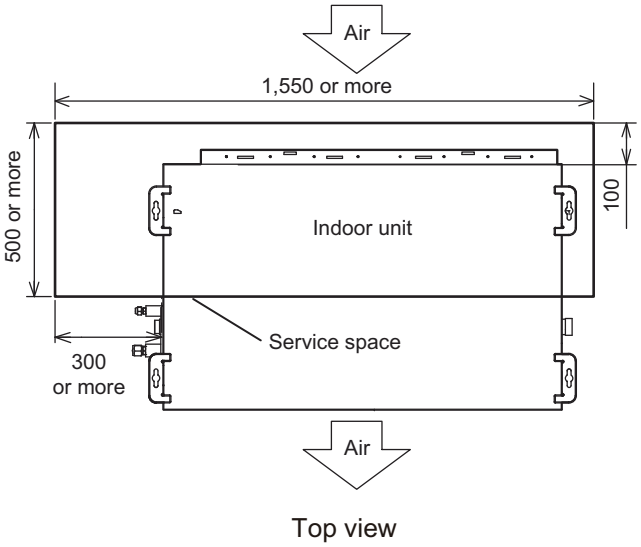

When using a square duct

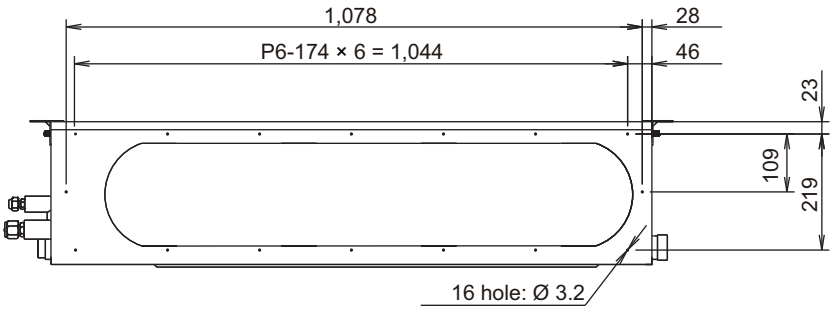

4-10. High static pressure duct type

■ ARXC036GTEH and ARXC045GTEH

Unit: mm

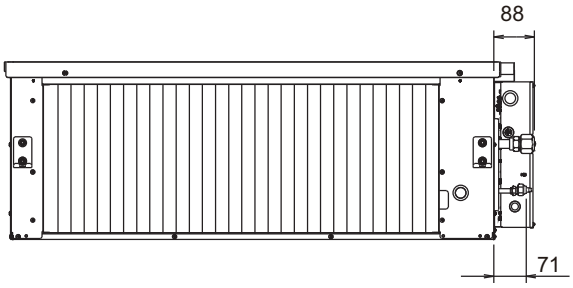

Rear view

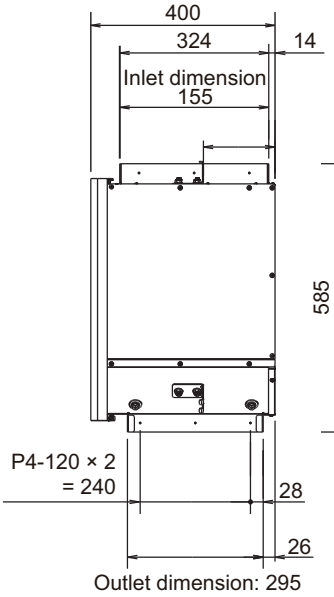

Side view (L)

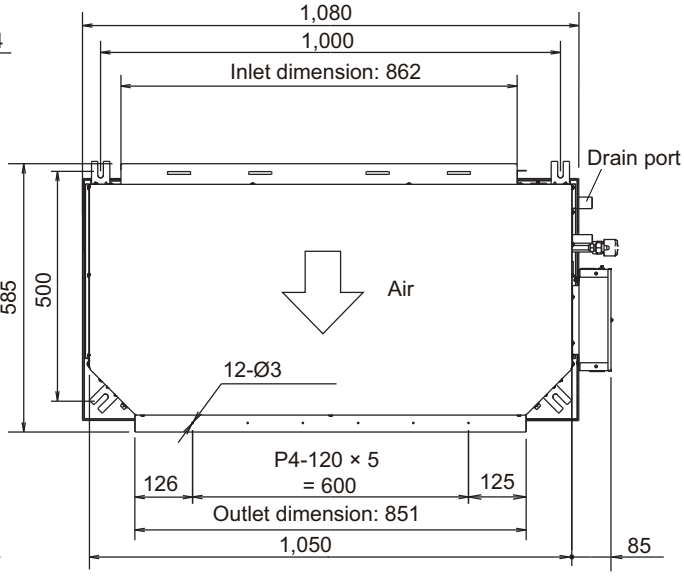

Top view

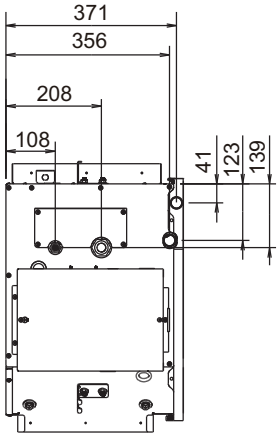

Side view (R)

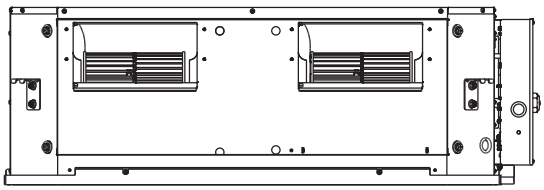

Front view

INDOOR UNITS

■ Installation space requirement

Unit: mm

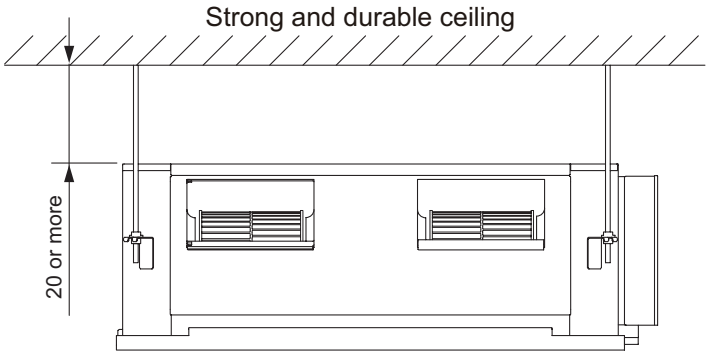

■ Maintenance space requirement

For future maintenance and service access, provide sufficient maintenance space.

NOTE: Do not place any wiring or illumination in the maintenance space, as they will impede service.

Unit: mm

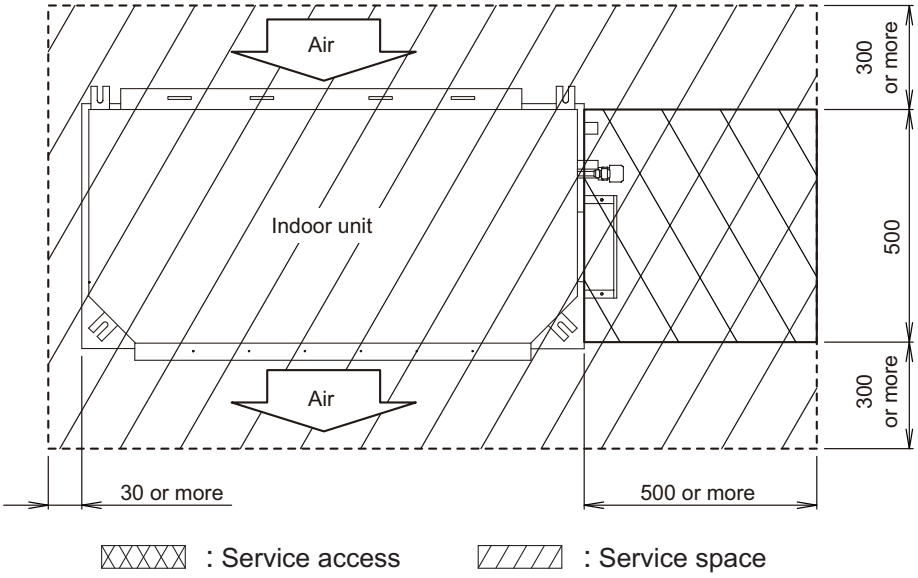

Top view

INDOOR UNITS

4-11. Compact floor type

■ Models: AG∗A004GCGH, AG∗A007GCGH, AG∗A009GCGH, AG∗A012GCGH, AG∗A014GCGH, AG∗E004GCEH, AG∗E007GCEH, AG∗E009GCEH, AG∗E012GCEH, and AG∗E014GCEH

Unit: mm

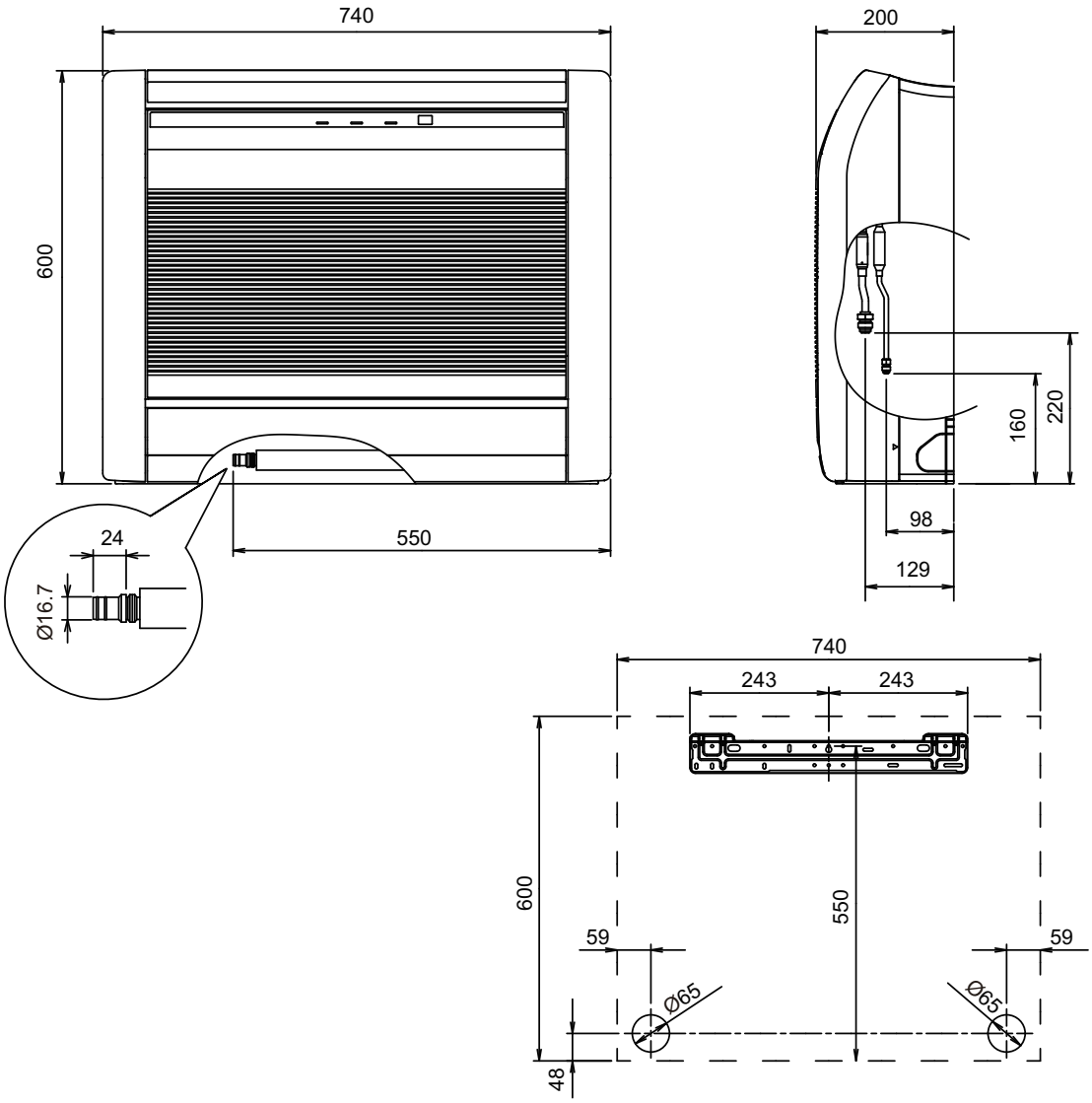

INDOOR UNITS

■ Installation space requirement

Unit: mm

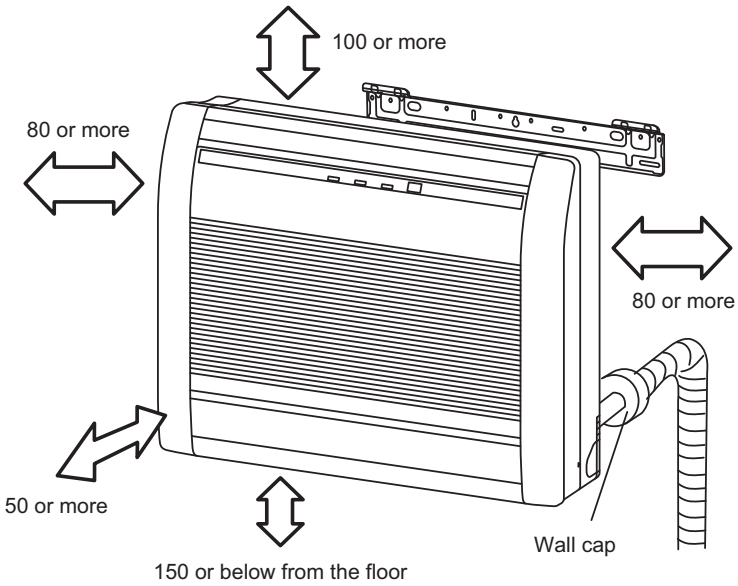

INDOOR UNITS

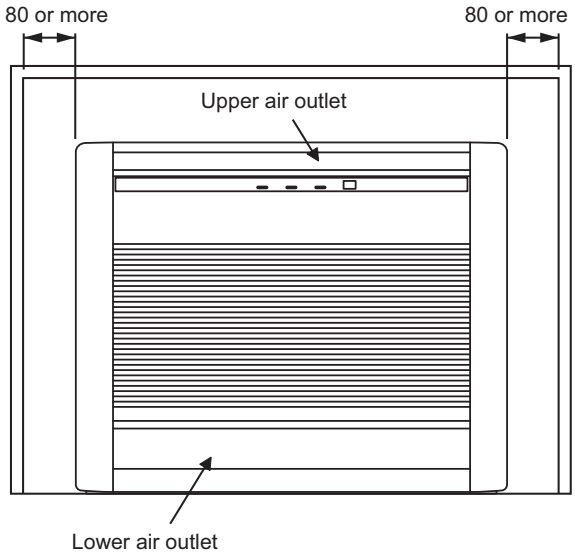

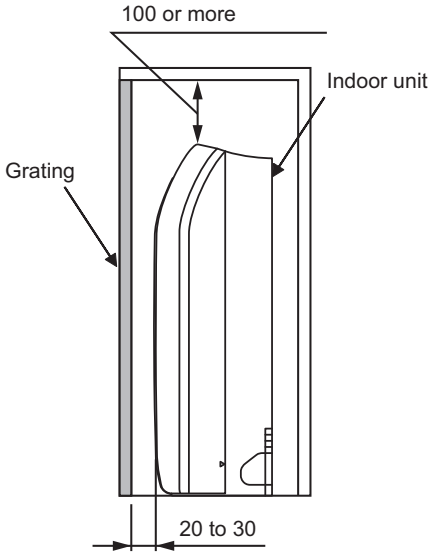

4-12. Floor/Ceiling type

■ Models: AB∗A012GTEH, AB∗A014GTEH, AB∗A018GTEH, and AB∗A024GTEH

Unit: mm

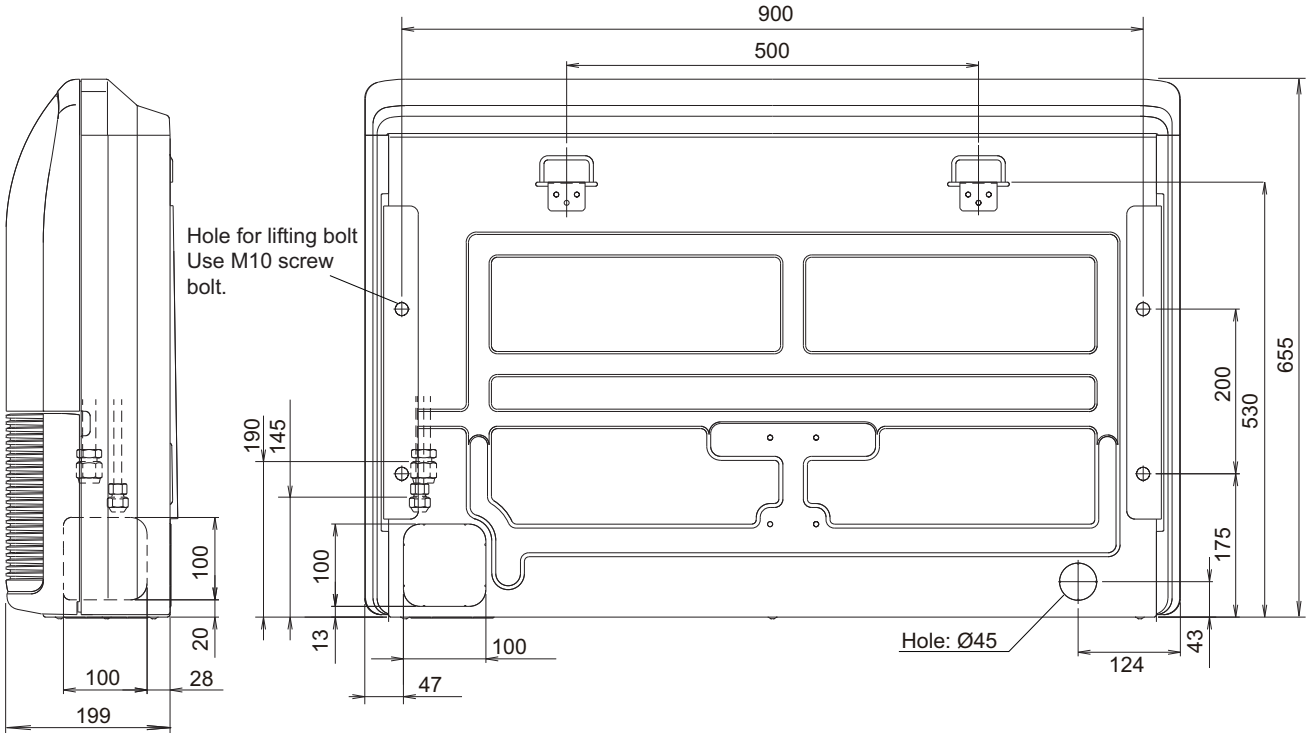

Side view

Rear view

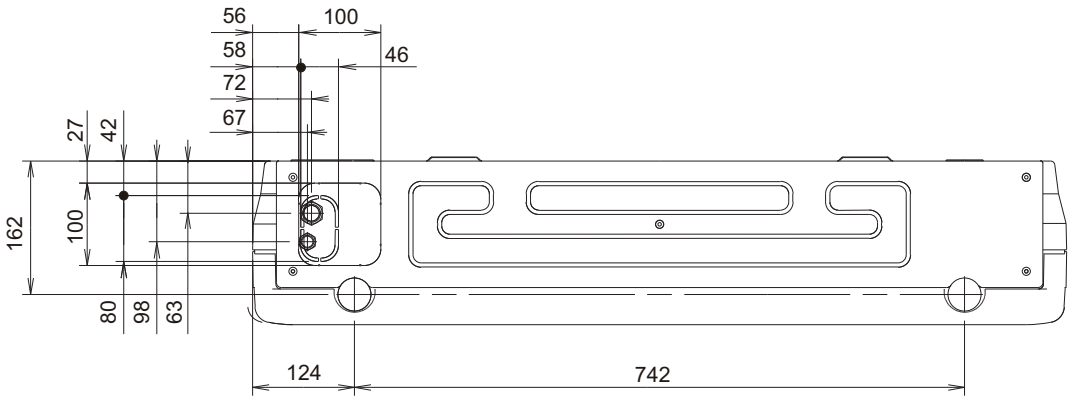

Bottom view

■ Installation space requirement

Unit: mm

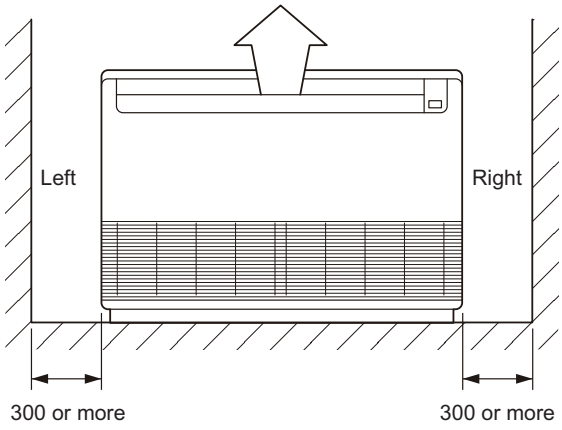

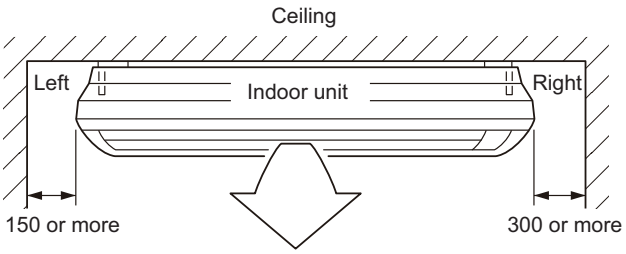

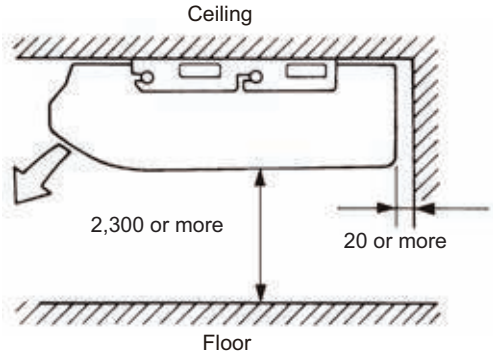

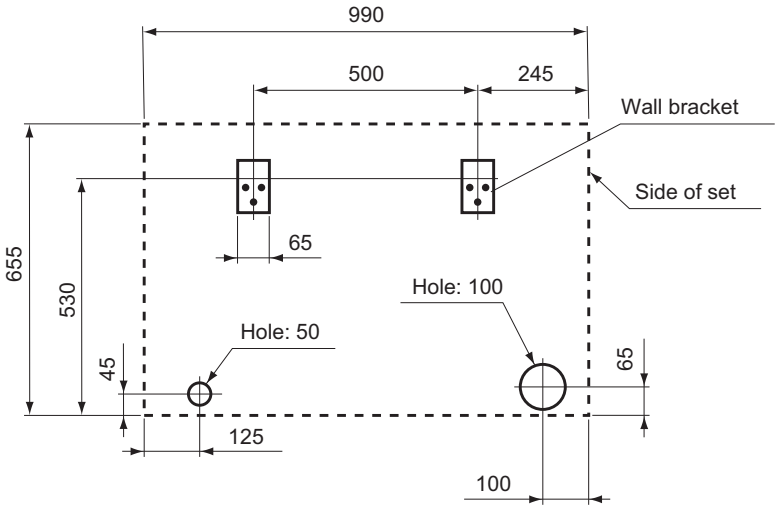

4-13. Ceiling type

■ Models: AB∗A030GTEH, AB∗A036GTEH, AB∗A045GTEH, and AB∗A054GTEH

Unit: mm

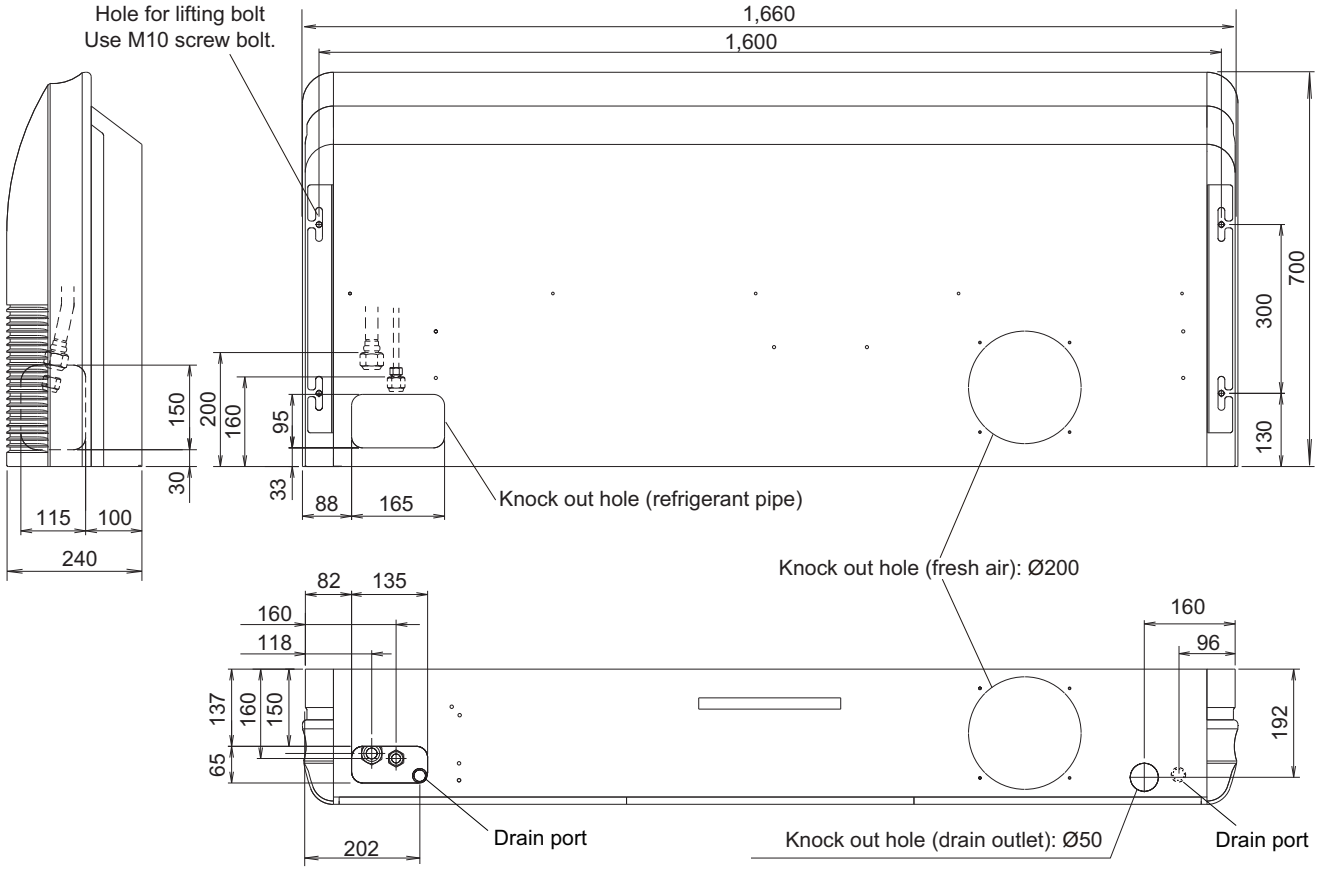

INDOOR UNITS

■ Installation space requirement

Unit: mm

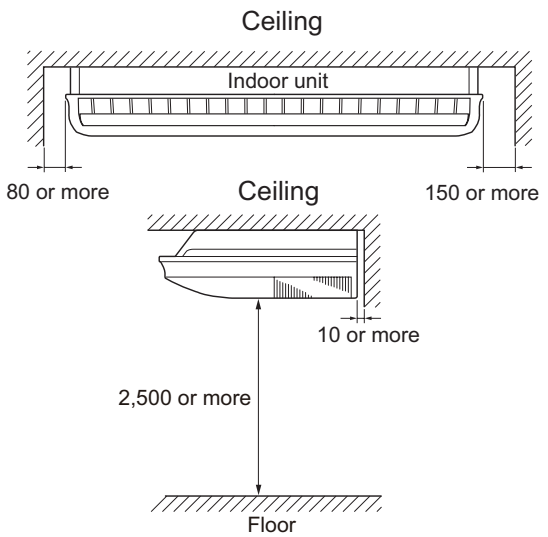

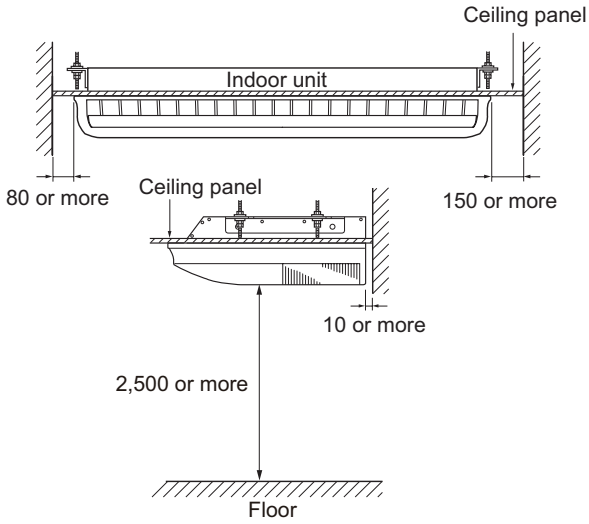

Dimensions (Space required for Installation)

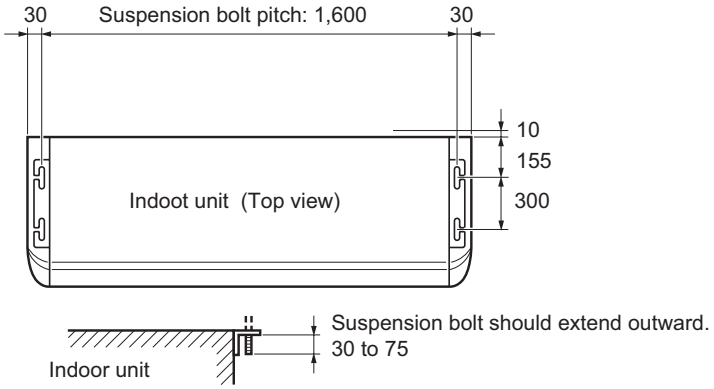

INDOOR UNITS

INDOOR UNITS

4-14. Wall mounted type

■ Models: AS∗A004GCGH, AS∗A007GCGH, AS∗A009GCGH, AS∗A012GCGH, AS∗A014GCGH, AS∗E004GCEH, AS∗E007GCEH, AS∗E009GCEH, AS∗E012GCEH, and AS∗E014GCEH

Unit: mm

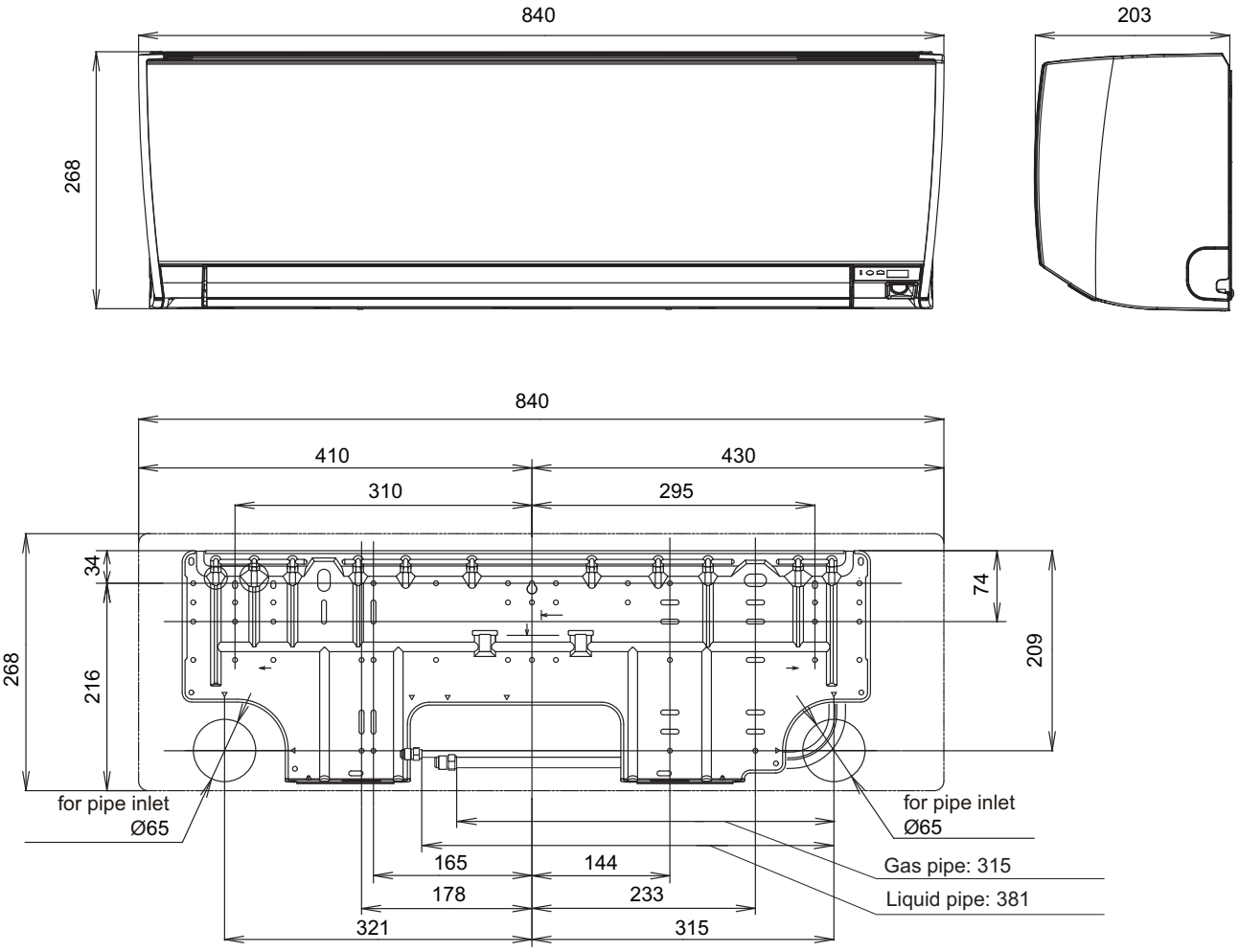

INDOOR UNITS

■ Installation space requirement

Unit: mm

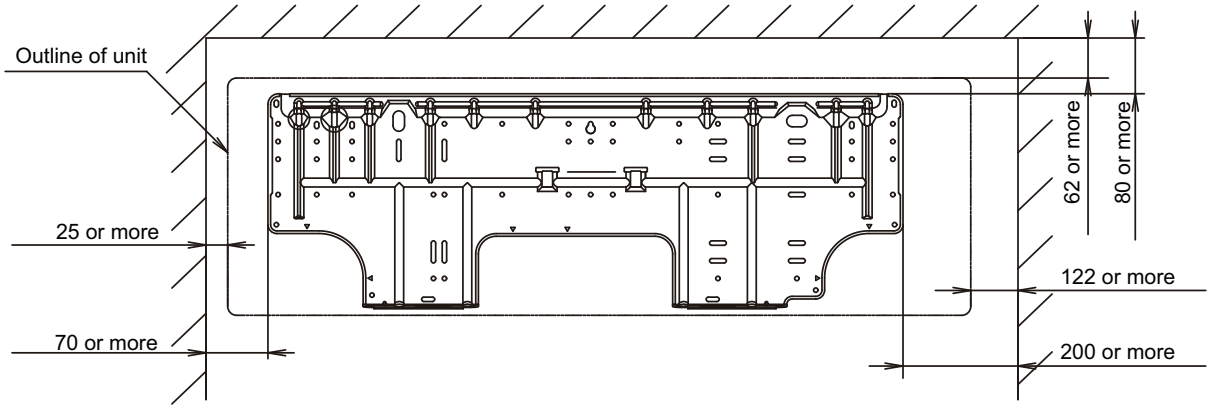

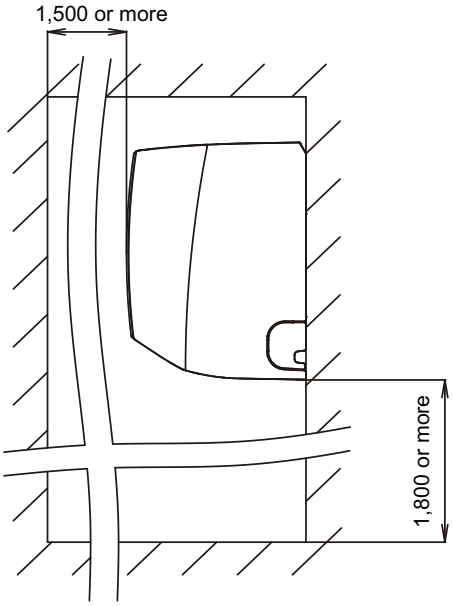

INDOOR UNITS

■ Models: AS∗A18GBCH and AS∗A24GBCH

Unit: mm

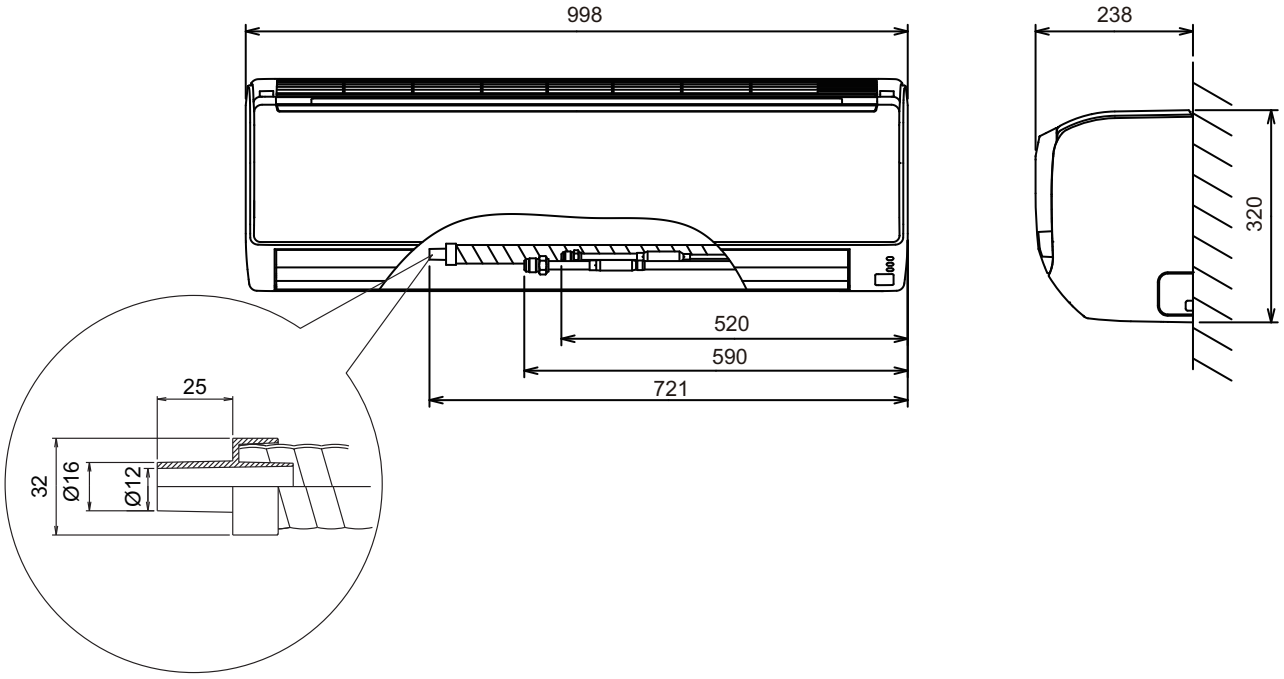

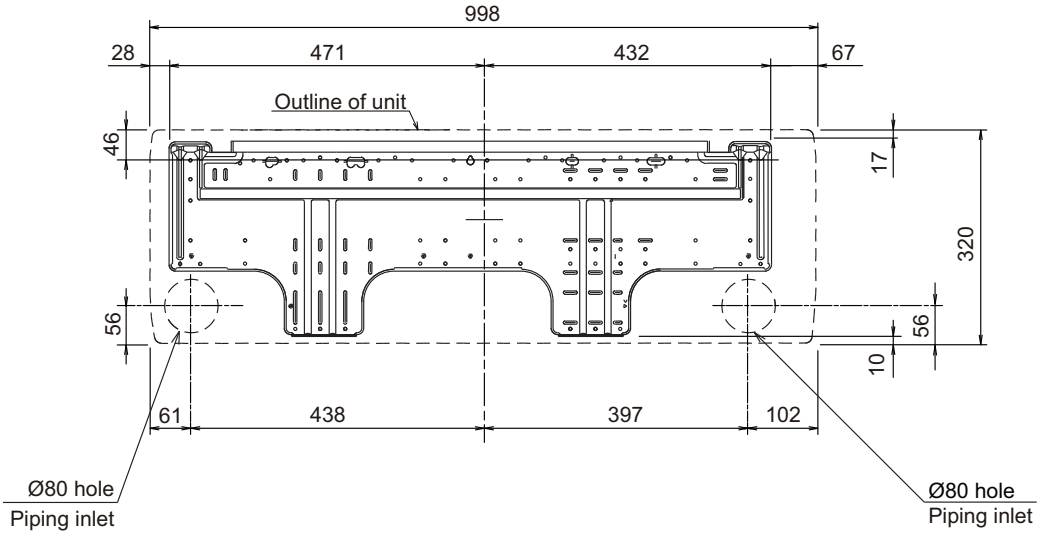

INDOOR UNITS

■ Installation space requirement

Unit: mm

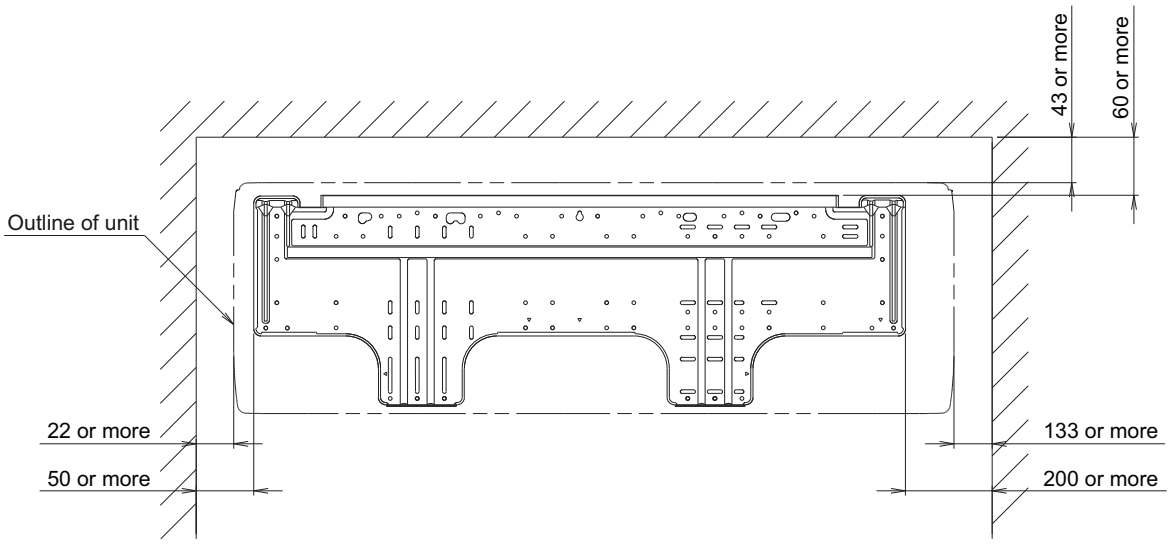

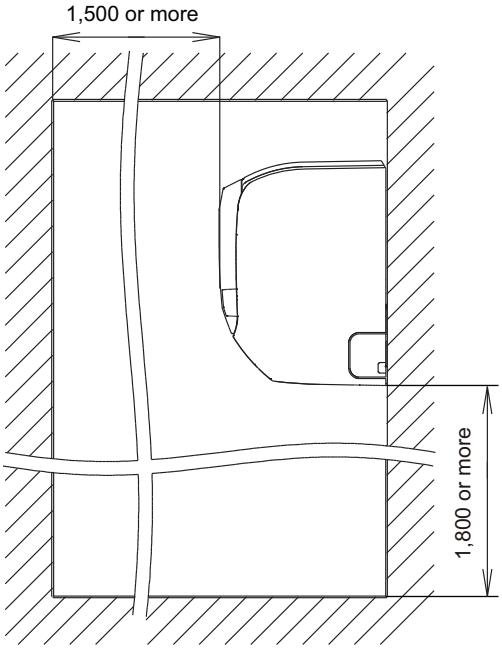

INDOOR UNITS

■ Models: AS∗A030GTEH and AS∗A034GTEH

Unit: mm

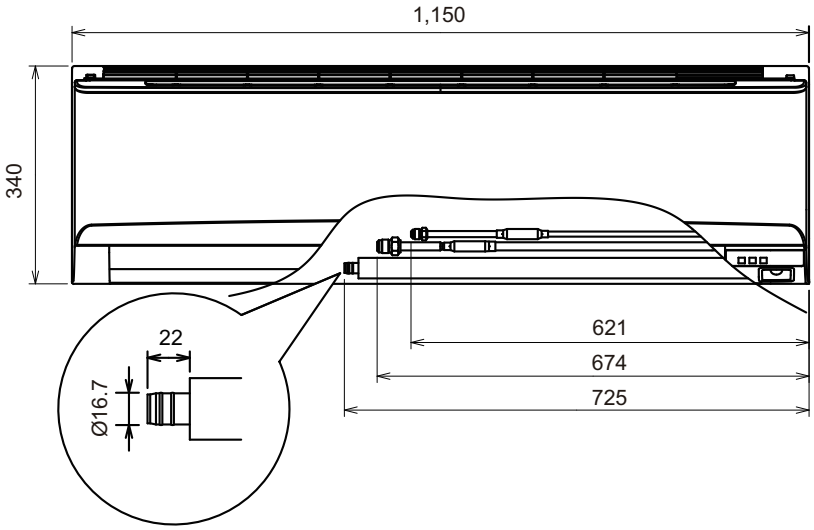

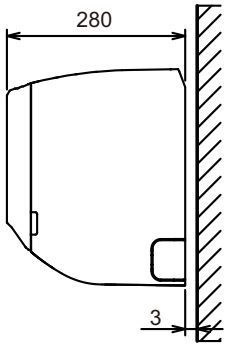

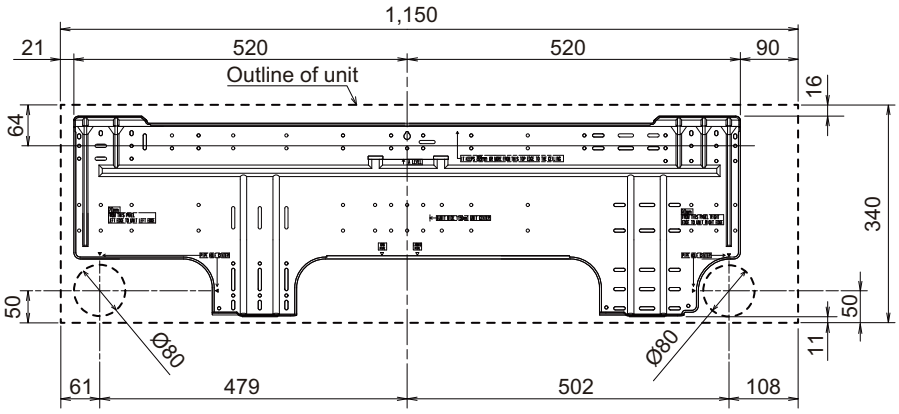

INDOOR UNITS

■ Installation space requirement

Unit: mm

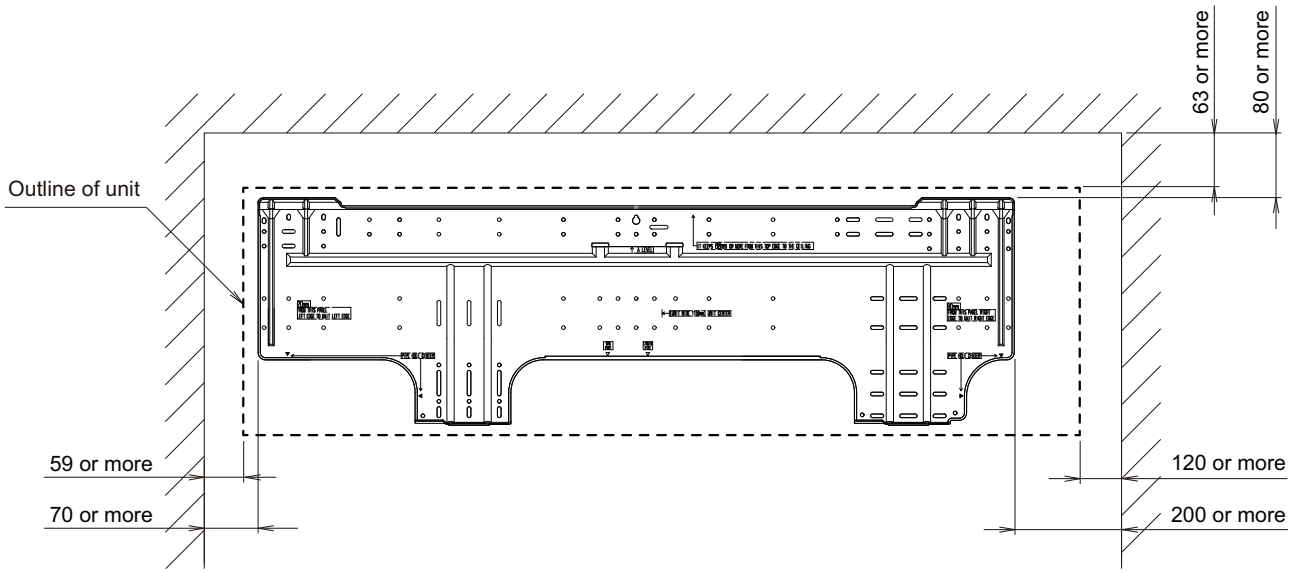

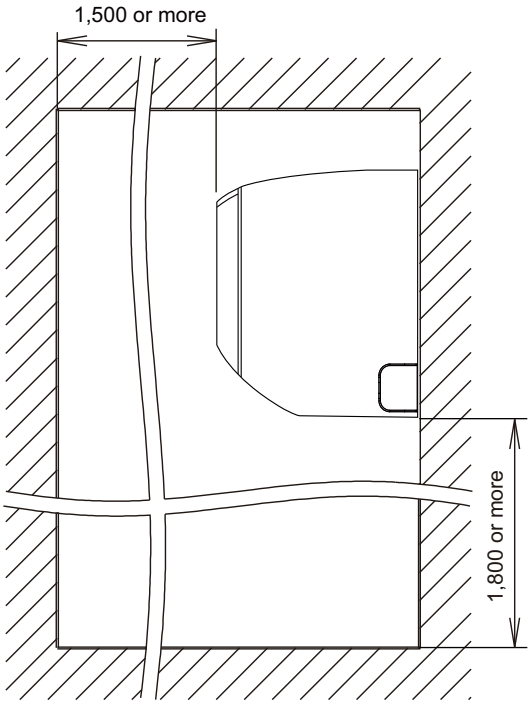

INDOOR UNITS

5. Wiring diagrams

5-1. Compact cassette type

■ Models: AUXB004GLEH, AUXB007GLEH, AUXB009GLEH, AUXB012GLEH, AUXB014GLEH, AUXB018GLEH, and AUXB024GLEH

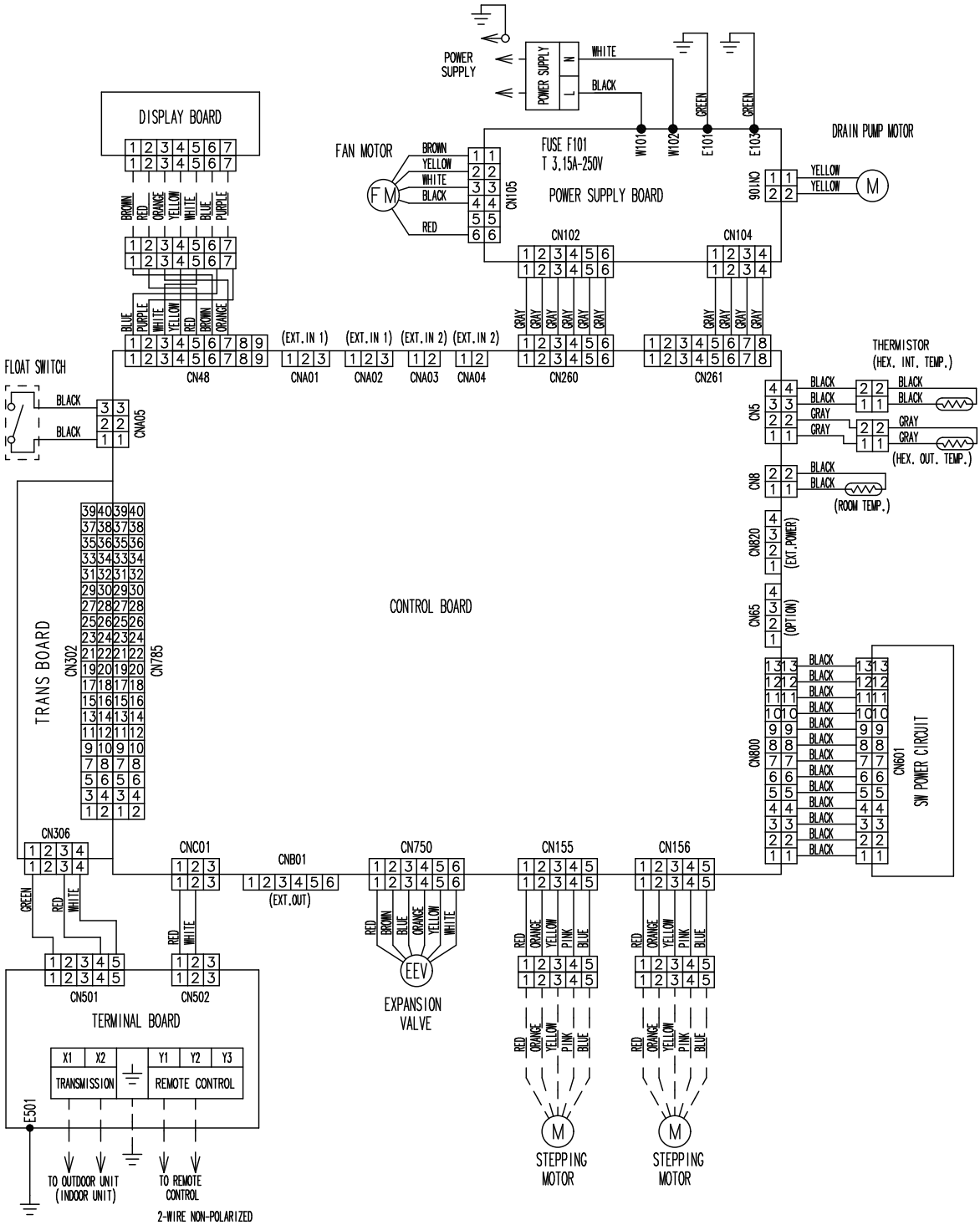

5-2. 4-way flow cassette type

■ Models: AUXD18GALH, AUXD24GALH, AUXA30GALH, AUXA34GALH, AUXA36GALH, AUXA45GALH, and AUXA54GALH

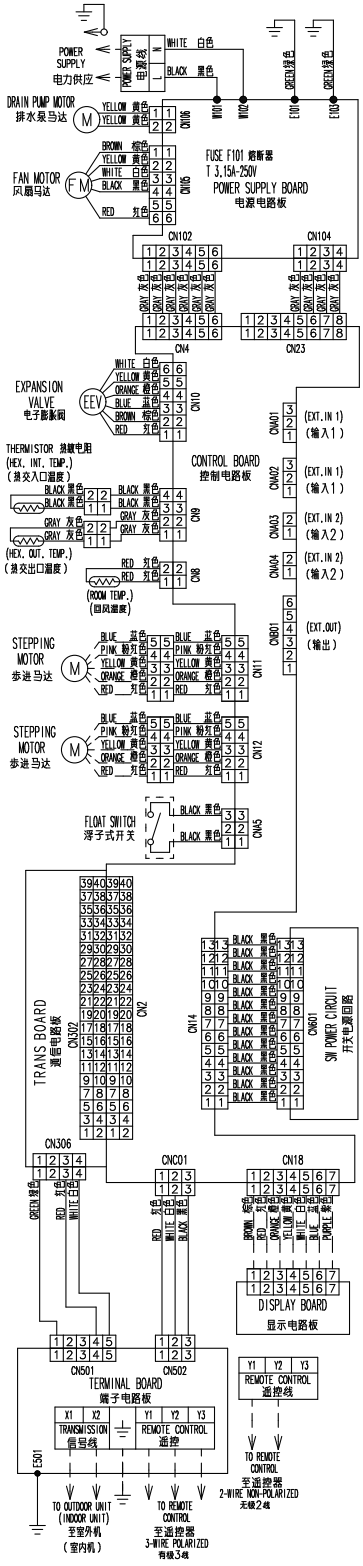

INDOOR UNITS

5-3. Circular flow cassette type

■ Models: AUXN009GLAH, AUXN012GLAH, AUXN014GLAH, AUXM018GLEH, AUXM024GLEH, AUXM030GLEH, AUXK018GLEH, AUXK024GLEH, AUXK030GLEH, AUXK034GLEH, AUXK036GLEH, AUXK045GLEH, and AUXK054GLEH

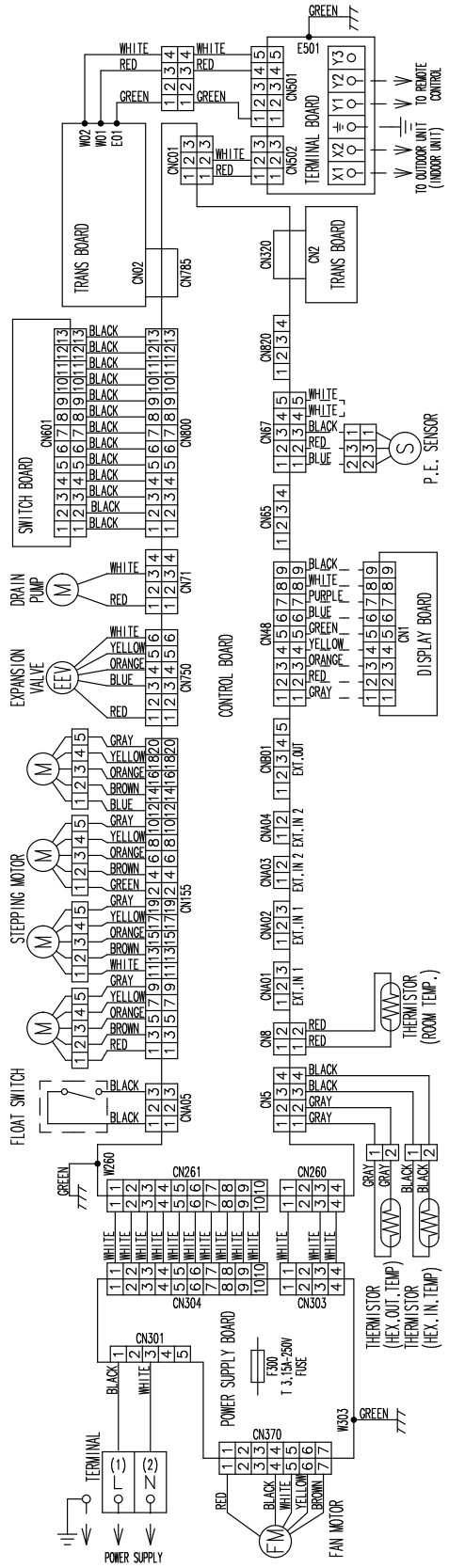

5-4. 3D flow cassette type

■ Models: AUXS018GLEH and AUXS024GLEH

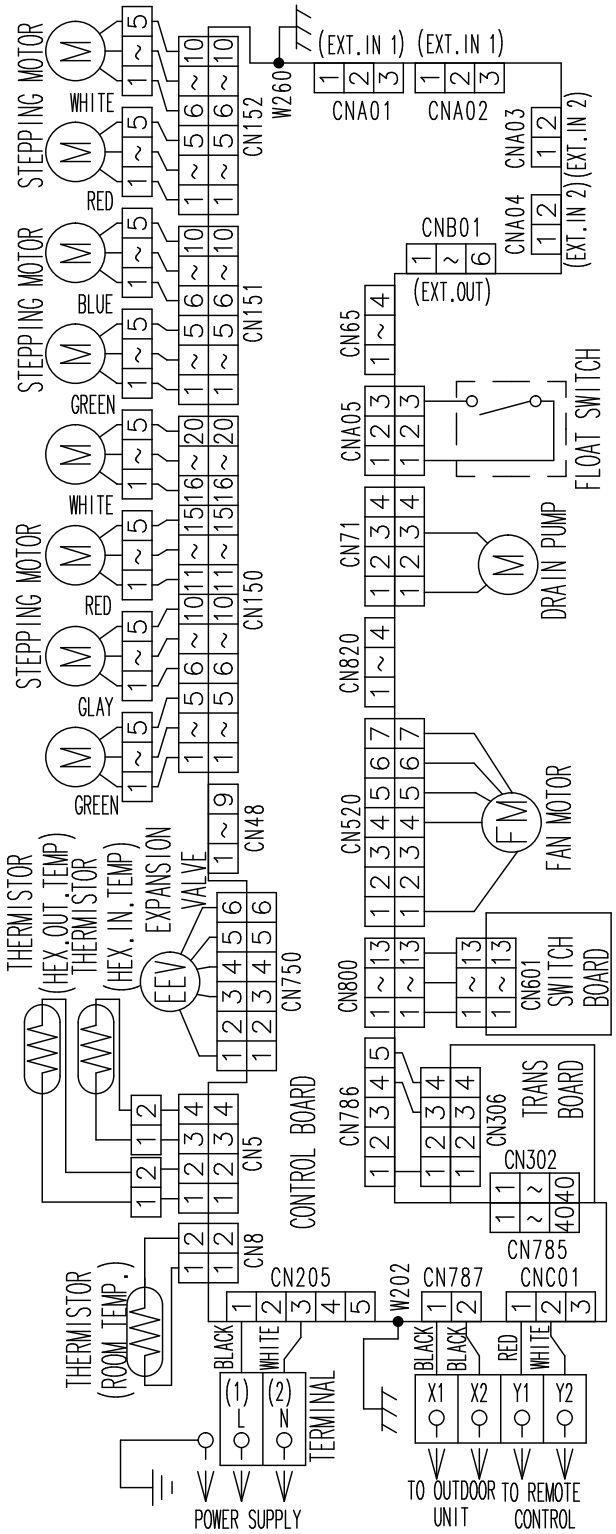

INDOOR UNITS

5-5. One way flow cassette type

■ Models: AUXV004GLEH, AUXV007GLEH, AUXV009GLEH, AUXV012GLEH, AUXV014GLEH, AUXV018GLEH, and AUXV024GLEH

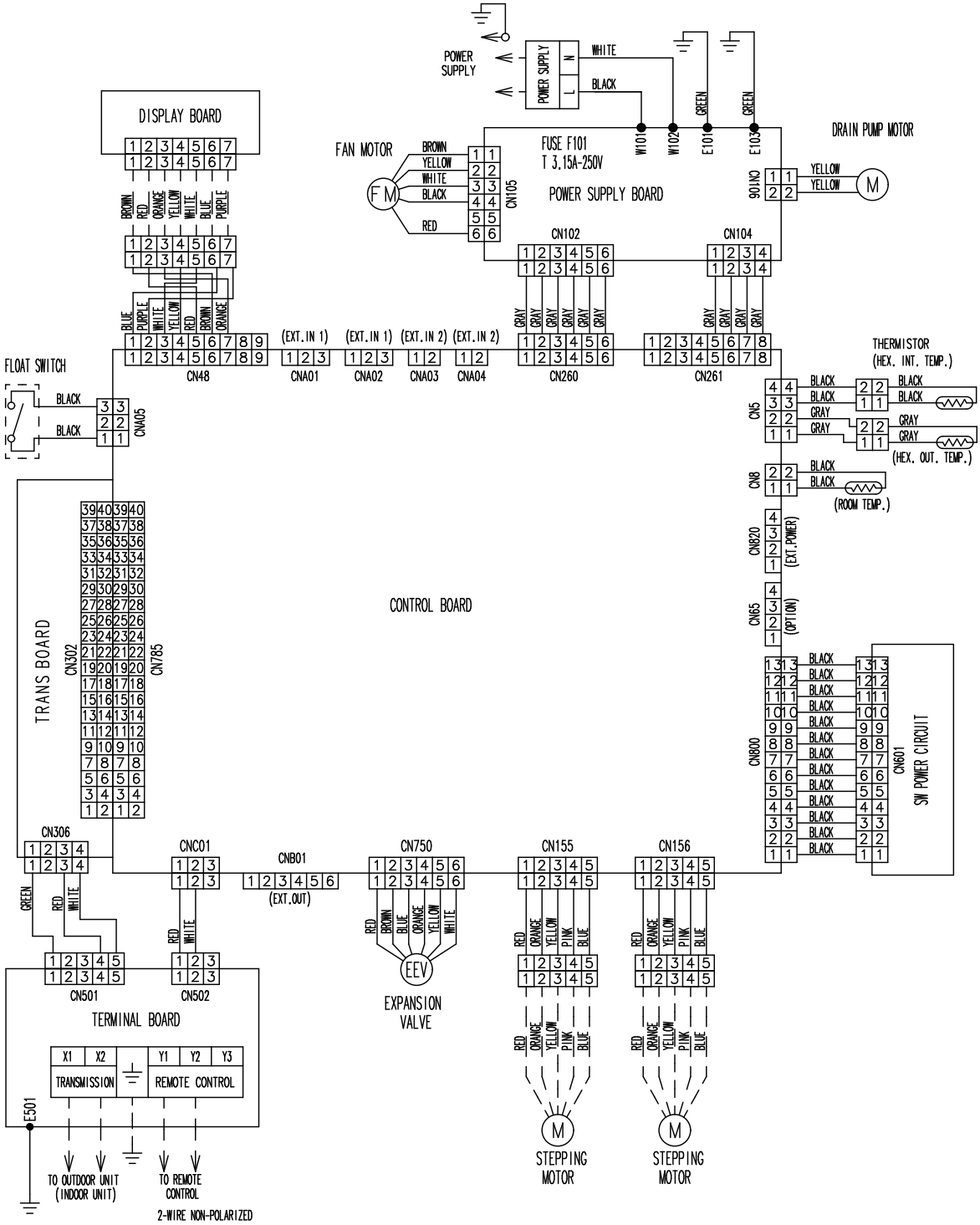

INDOOR UNITS

INDOOR UNITS

5-6. Low static pressure duct (Mini duct) type

■ Models: ARXK004GLGH, ARXK007GLGH, ARXK009GLGH, ARXK012GLGH, ARXK014GLGH, ARXK018GLGH and ARXK024GLGH

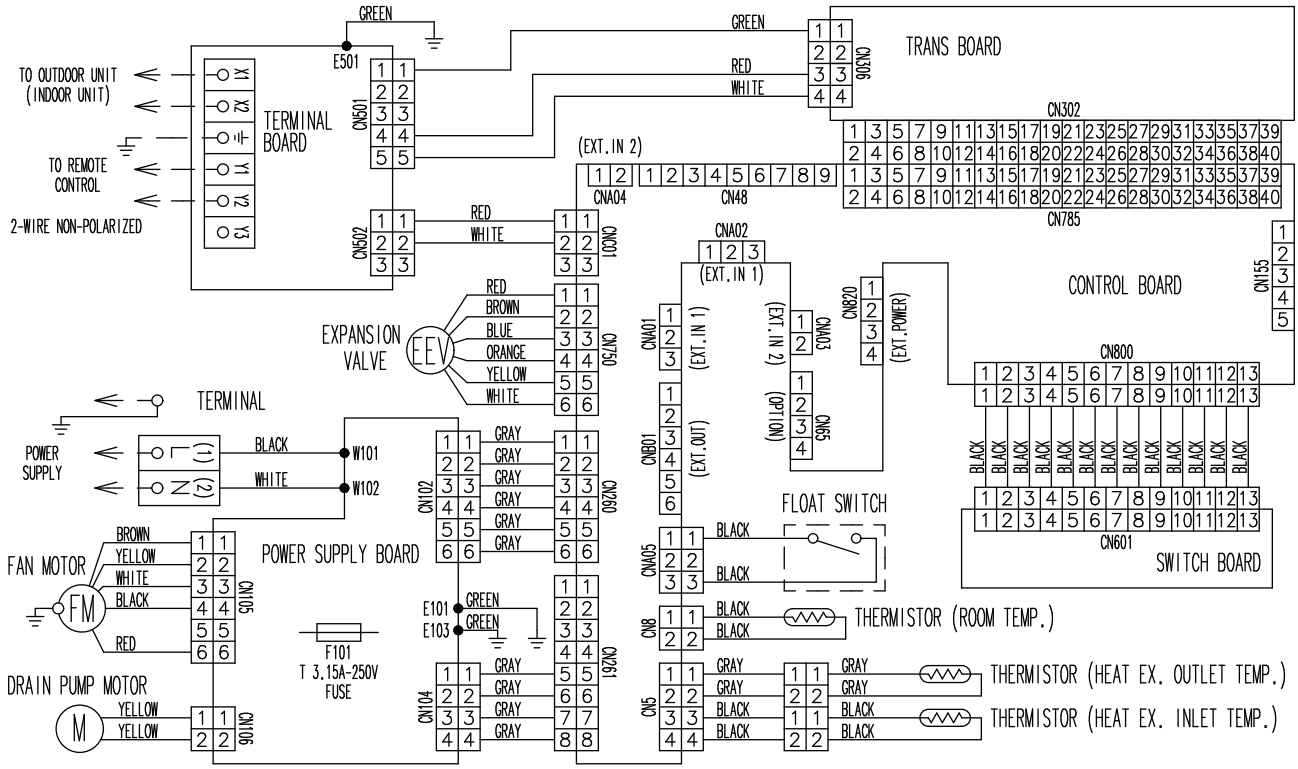

5-7. Low static pressure duct (Slim duct)/Slim concealed floor type

■ Models: ARXD007GLEH, ARXD009GLEH, ARXD012GLEH, ARXD014GLEH, ARXD018GLEH, and ARXD024GLEH

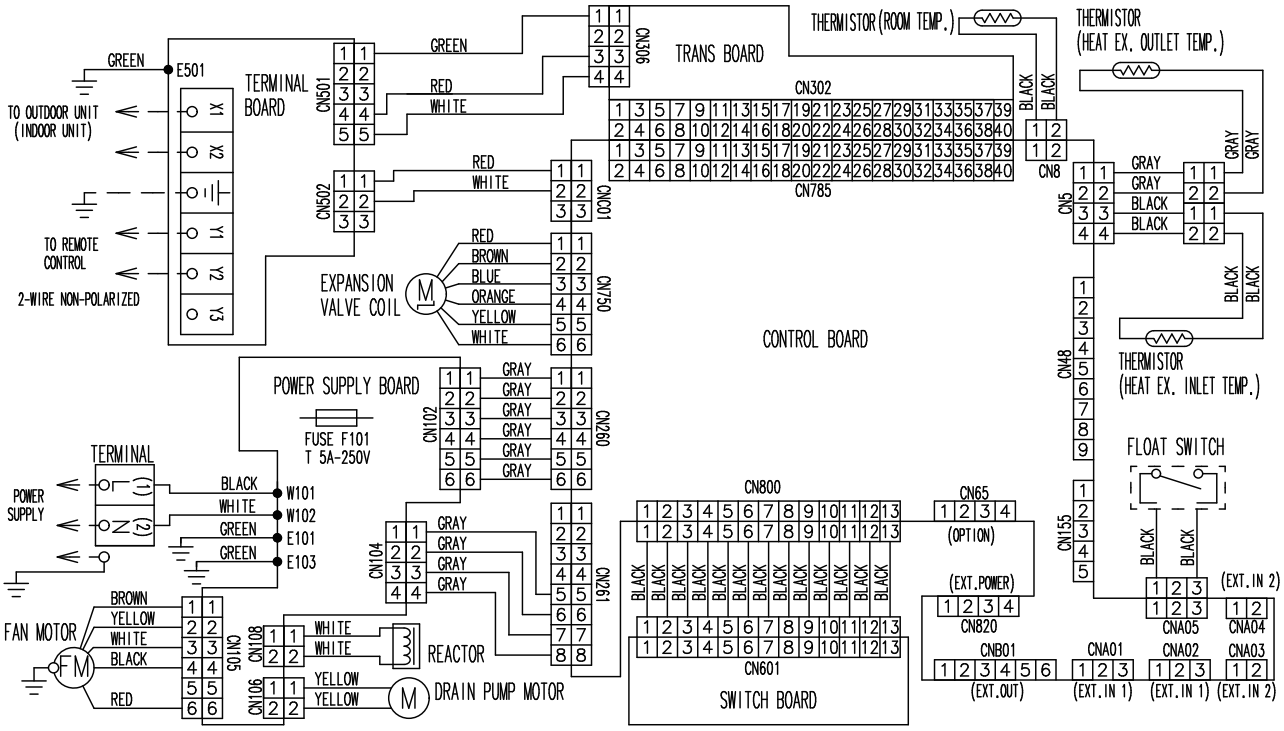

5-8. Low static pressure duct type (High efficiency)

■ Models: ARXP018GLFH and ARXP030GLFH

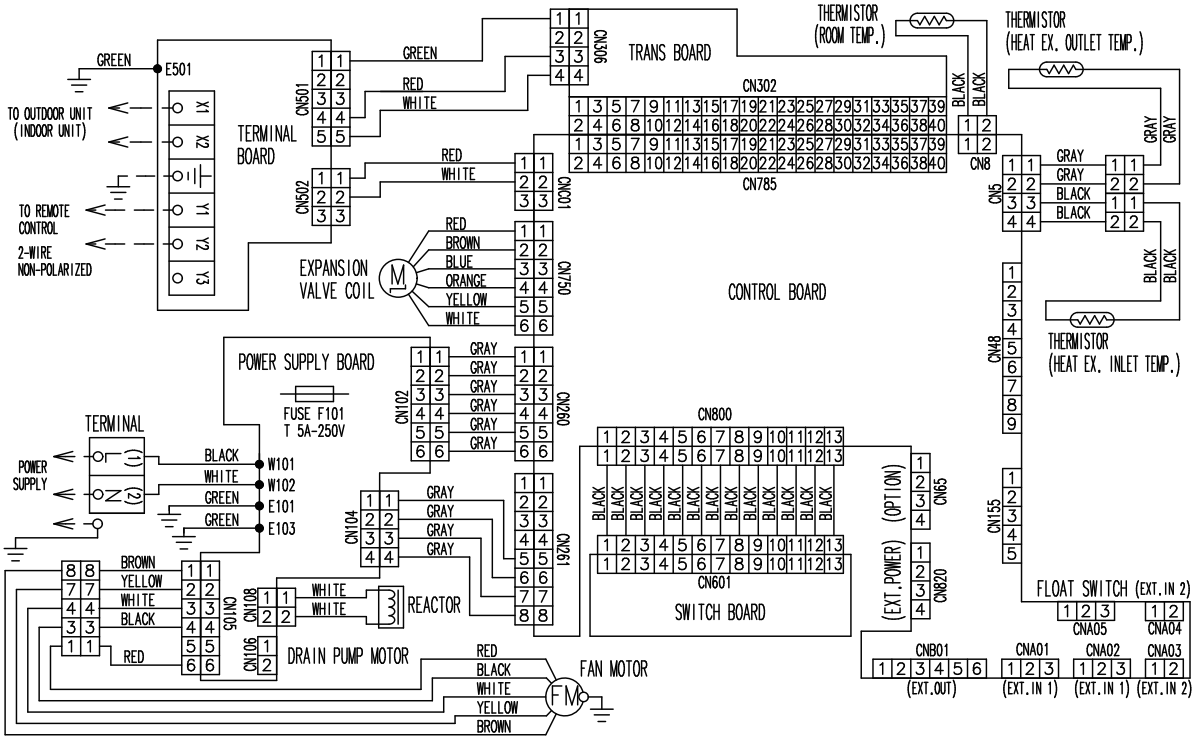

5-9. Medium static pressure duct type

■ Models: ARXA024GLEH, ARXA030GLEH, ARXA036GLEH, and ARXA045GLEH

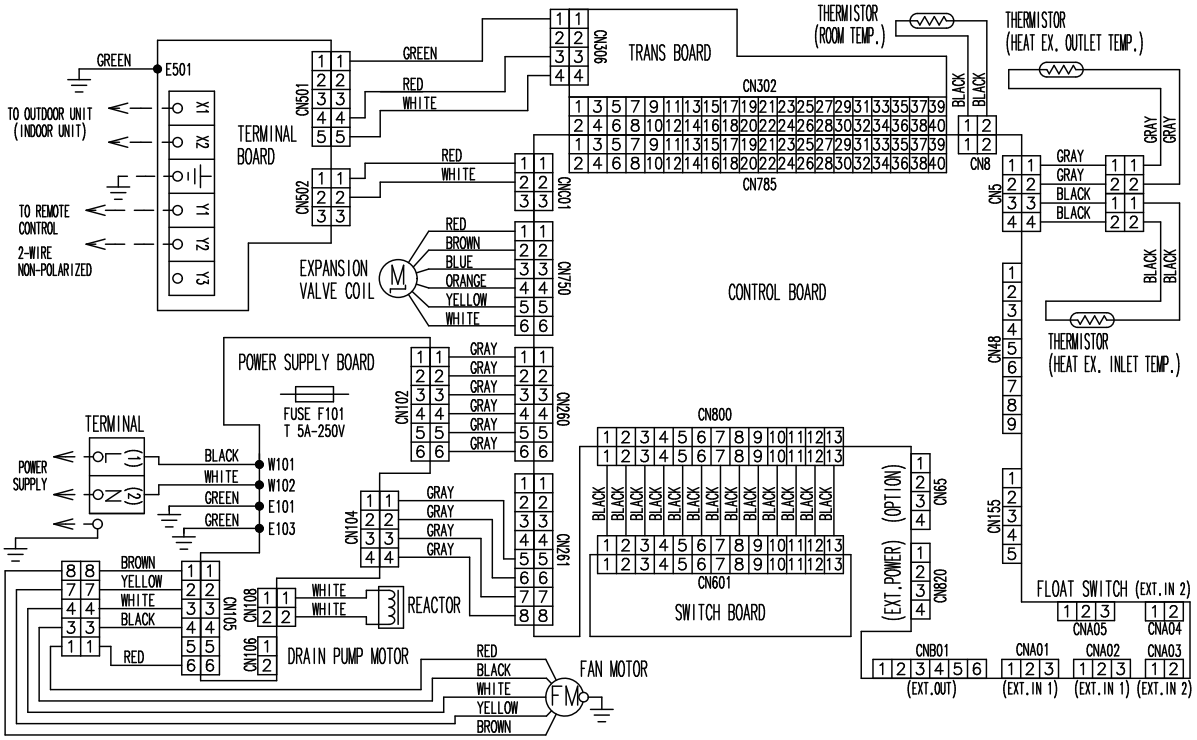

5-10. High static pressure duct type

■ Model: ARXC036GTEH

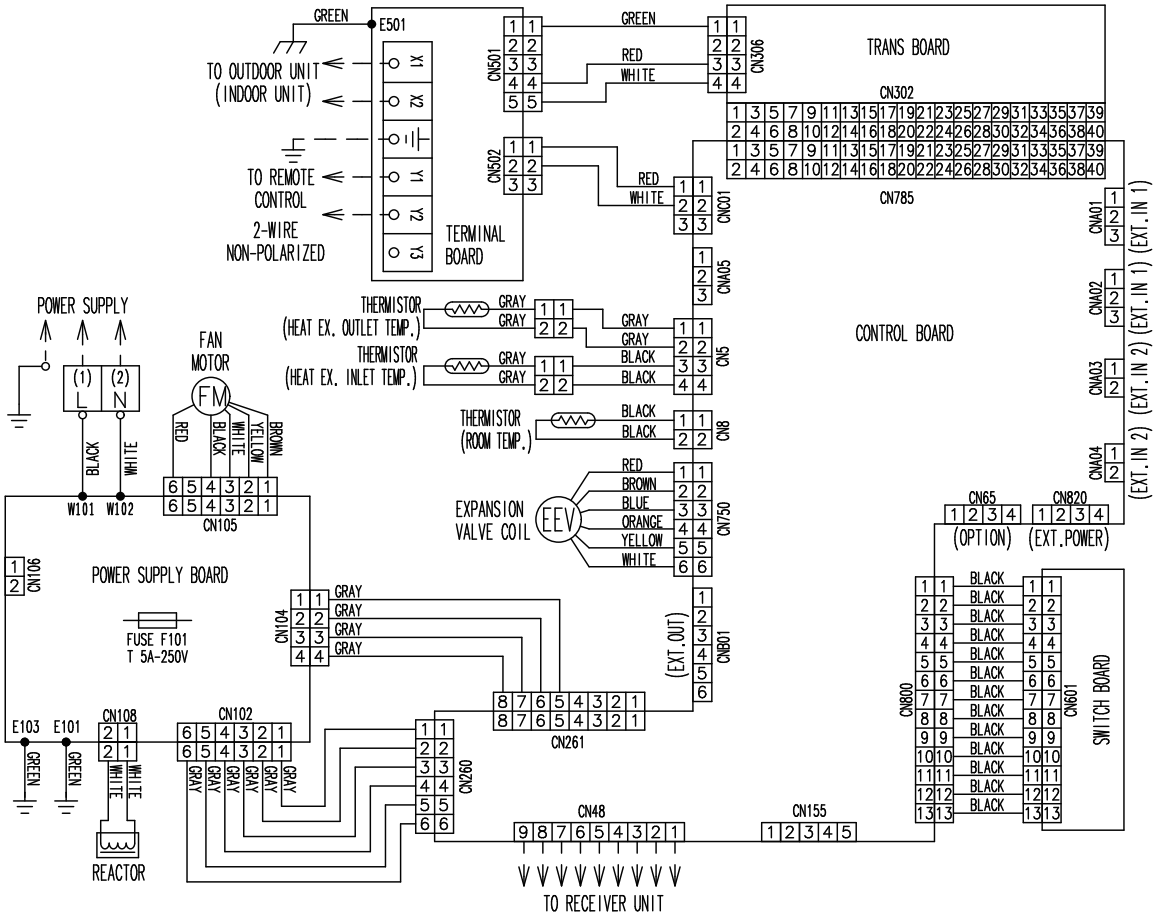

■ Model: ARXC045GTEH

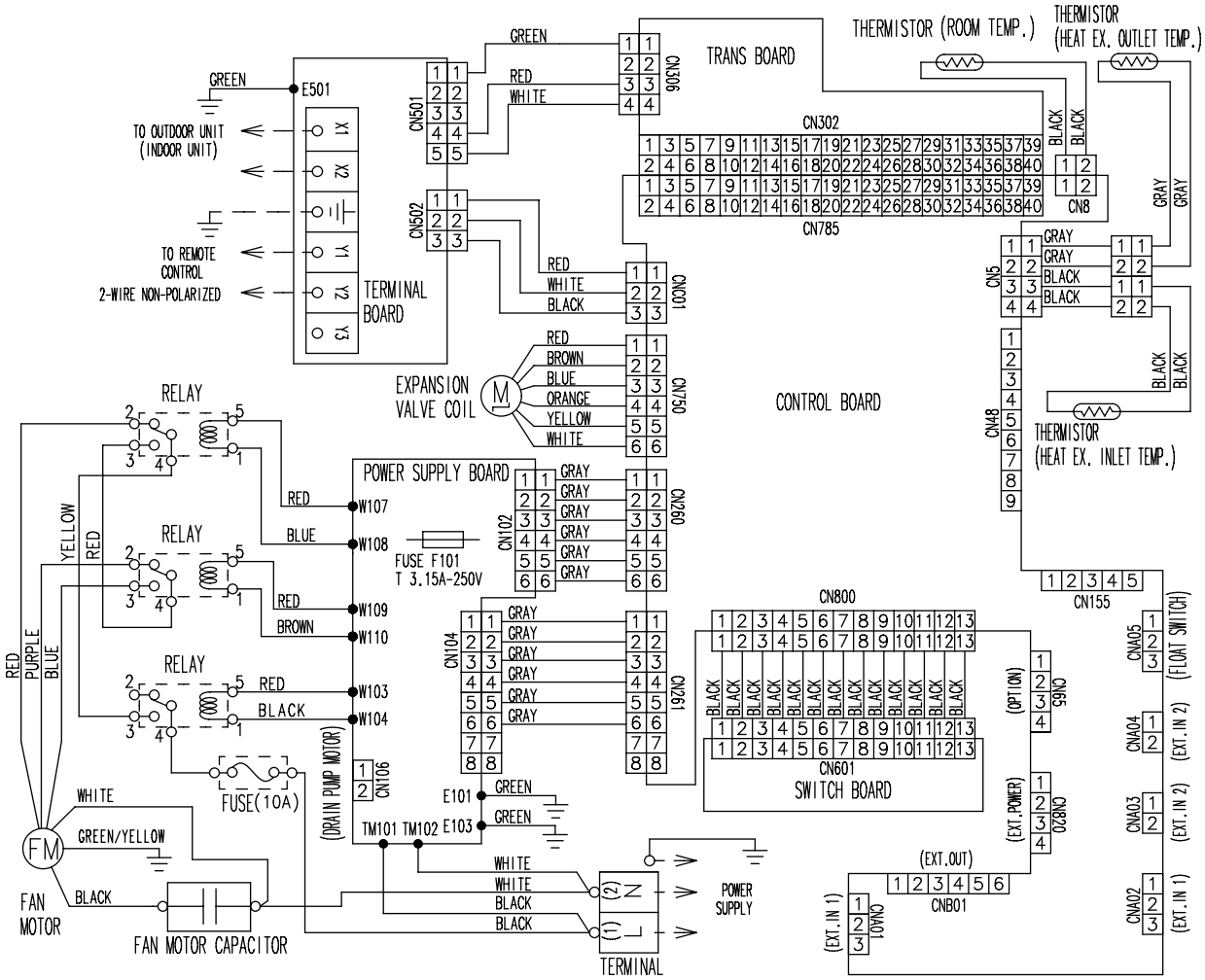

5-11. Compact floor type

■ Models: AG∗A004GCGH, AG∗A007GCGH, AG∗A009GCGH, AG∗A012GCGH, and AG∗A014GCGH

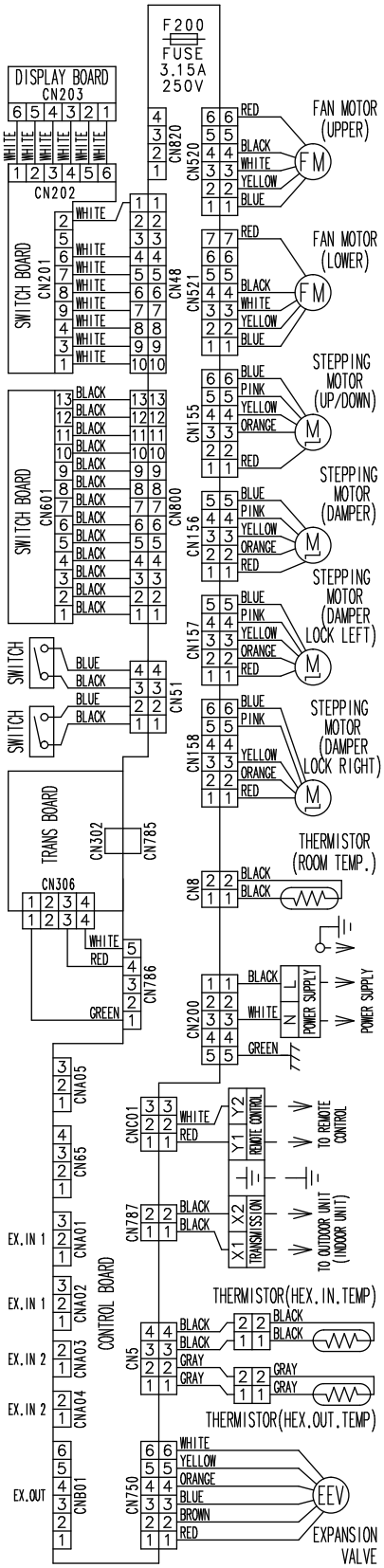

5-12. Compact floor type (EEV external model)

■ Models: AG∗E004GCEH, AG∗E007GCEH, AG∗E009GCEH, AG∗E012GCEH, and AG∗E014GCEH

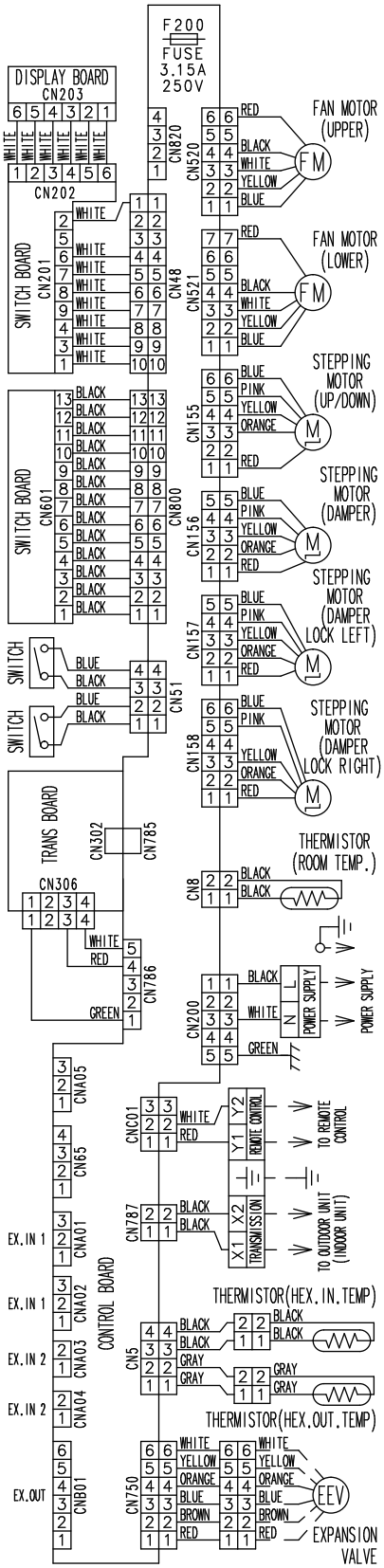

5-13. Floor/Ceiling type

■ Models: AB∗A012GTEH, AB∗A014GTEH, AB∗A018GTEH, and AB∗A024GTEH

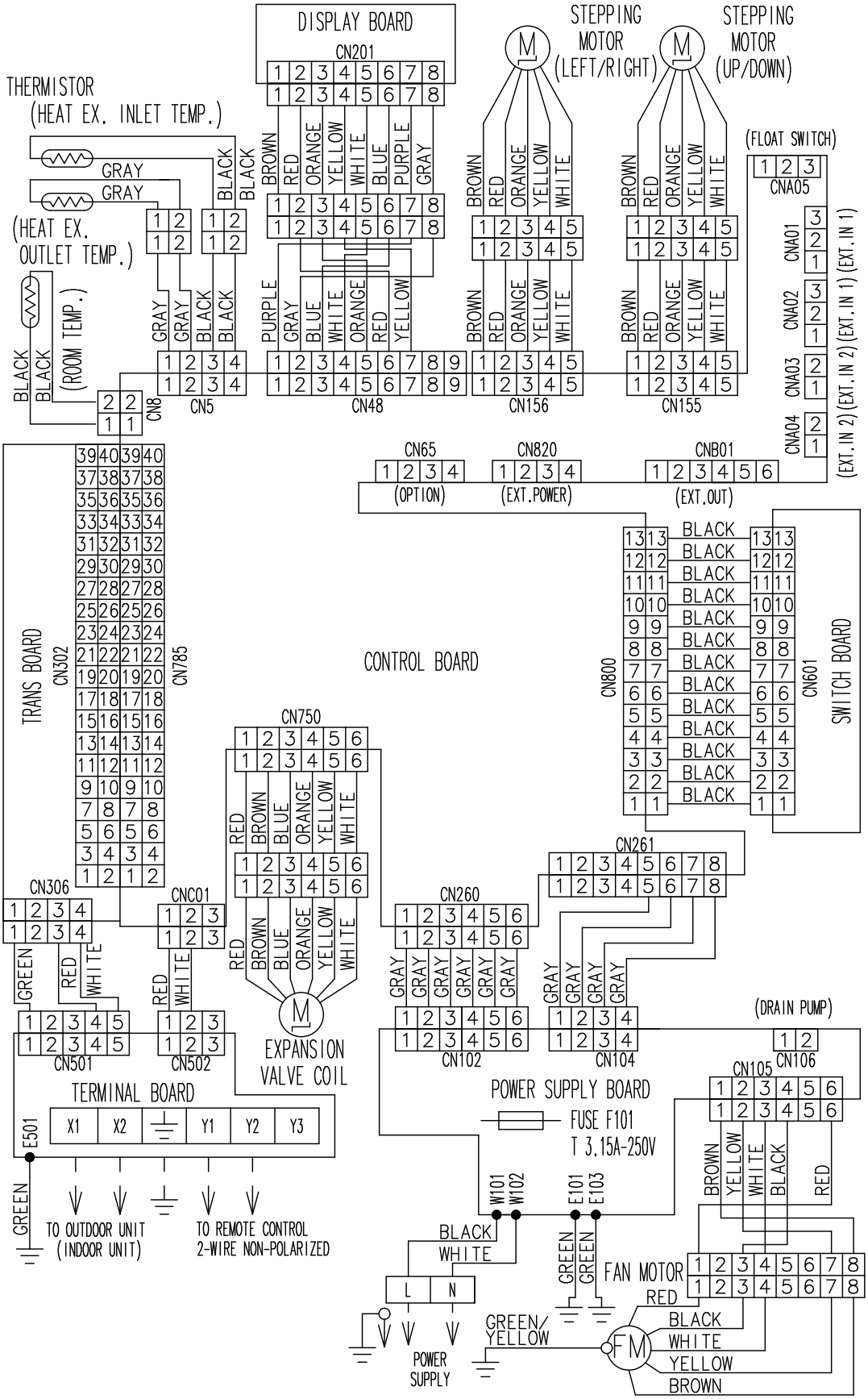

5-14. Ceiling type

■ Models: AB∗A030GTEH, AB∗A036GTEH, AB∗A045GTEH, and AB∗A054GTEH

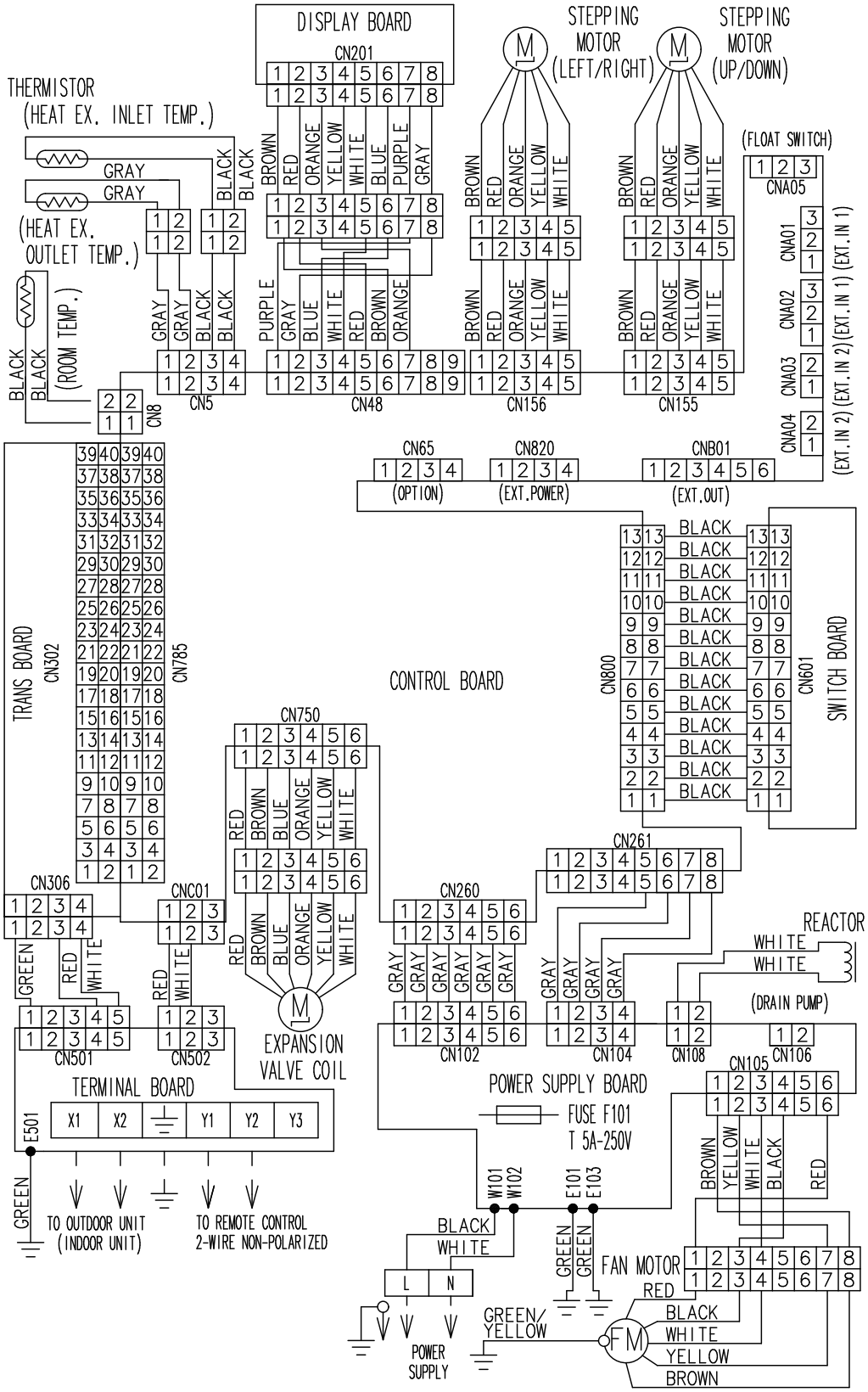

5-15. Wall mounted type

■ Models: AS∗A004GCGH, AS∗A007GCGH, AS∗A009GCGH, AS∗A012GCGH, and AS∗A014GCGH

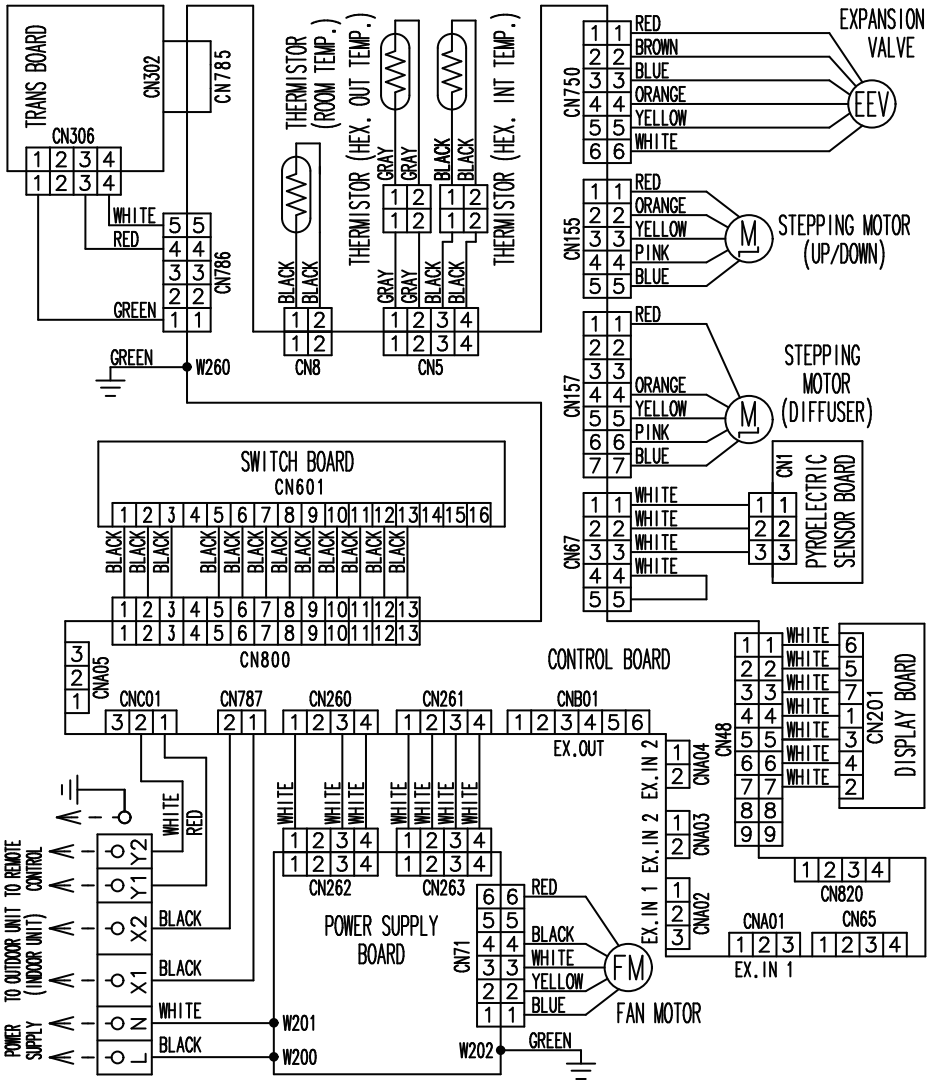

■ Models: AS∗A18GBCH and AS∗A24GBCH

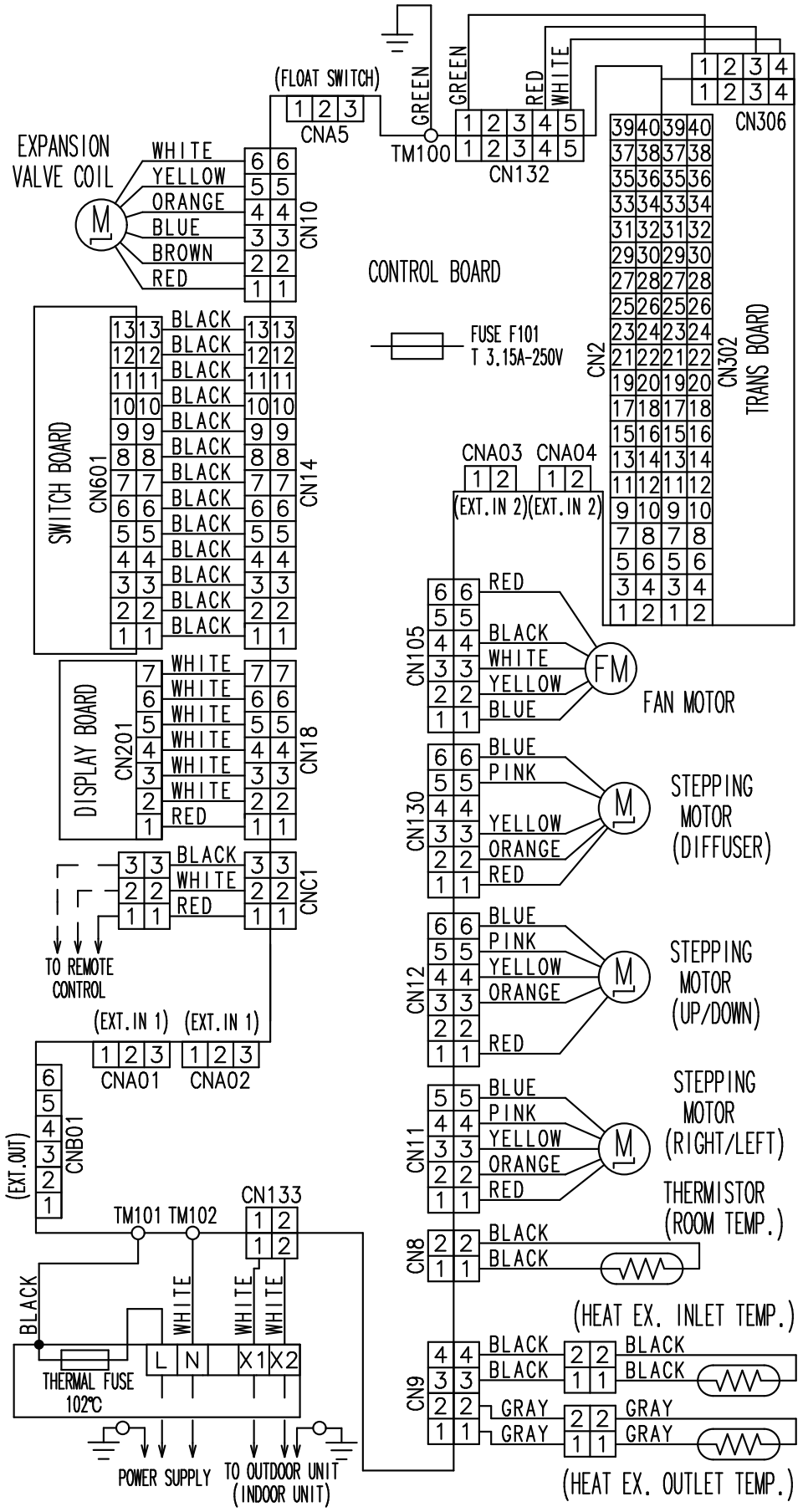

INDOOR UNITS

INDOOR UNITS

■ Models: AS∗A030GTEH and AS∗A034GTEH

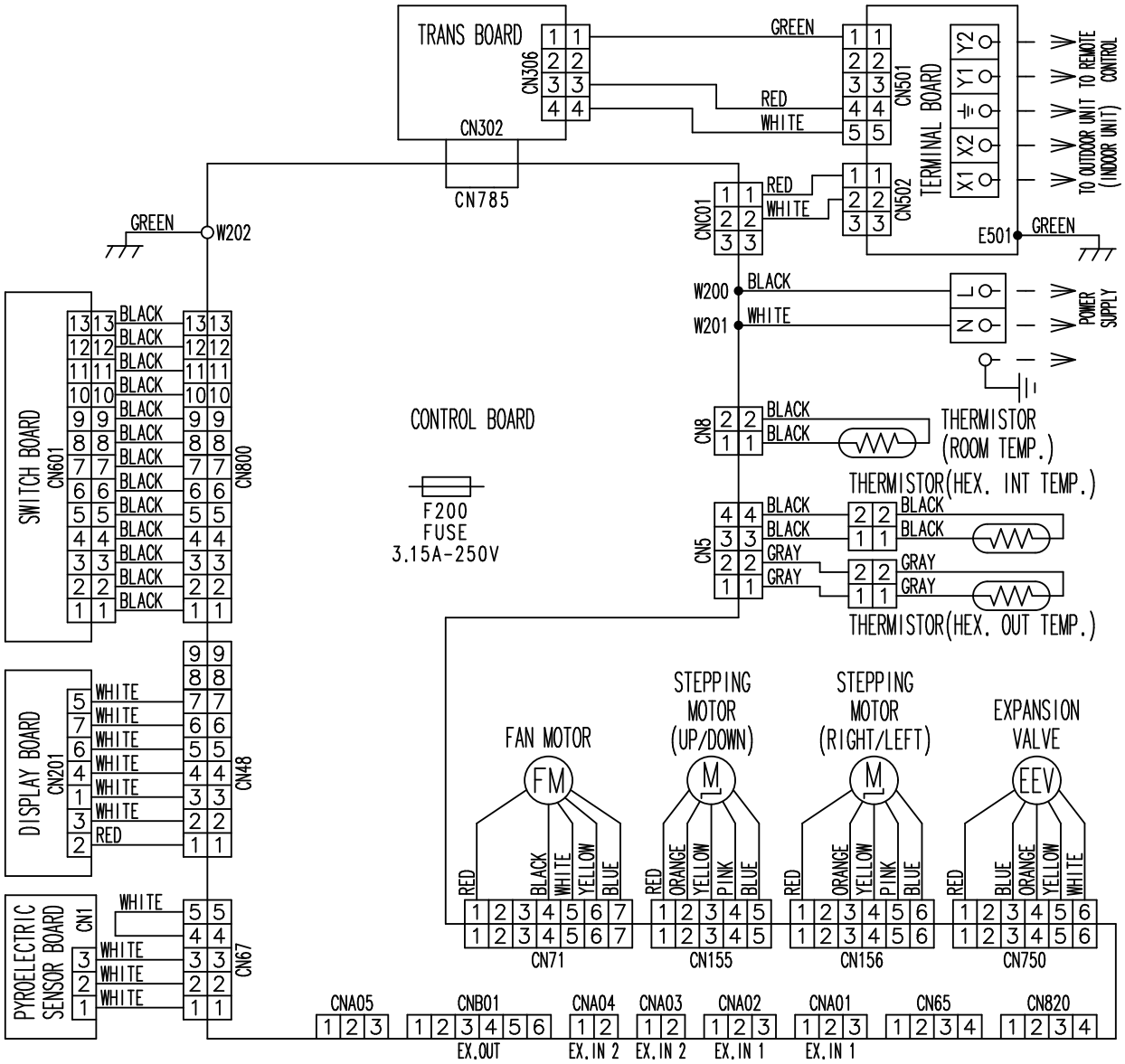

INDOOR UNITS

INDOOR UNITS

5-16. Wall mounted type (EEV external model)

■ Models: AS∗E004GCEH, AS∗E007GCEH, AS∗E009GCEH, AS∗E012GCEH, and AS∗E014GCEH

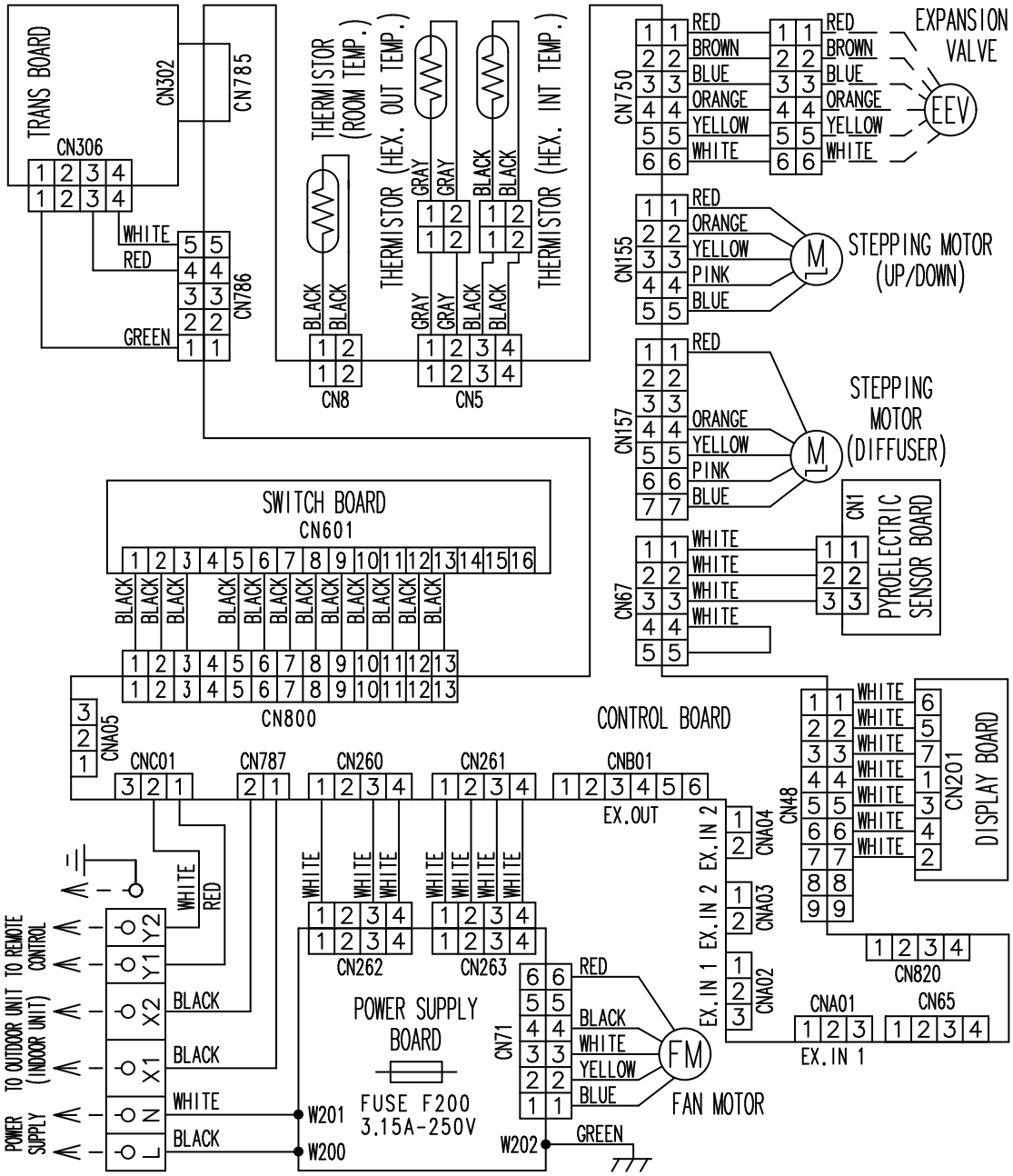

6. Air velocity and temperature distributions

6-1. Compact cassette type

■ Model: AUXB004GLEH

Measuring conditions	Fan speed	Operation mode
	HIGH	FAN

- **Air velocity distribution**

Top view
Vertical airflow direction louver: Up

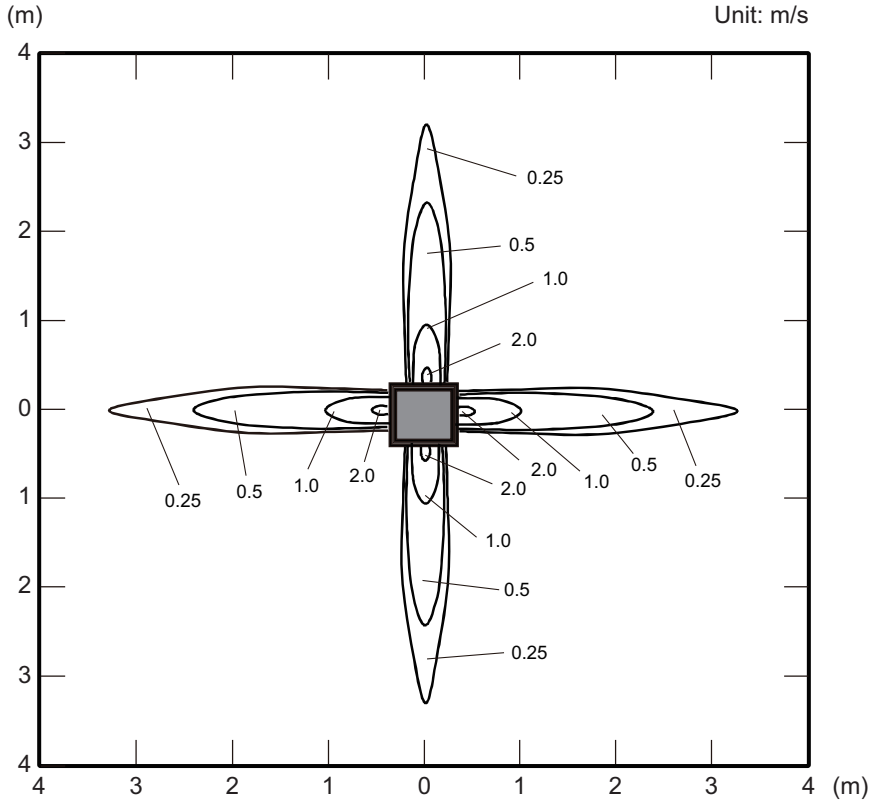

Side view
Vertical airflow direction louver: Up

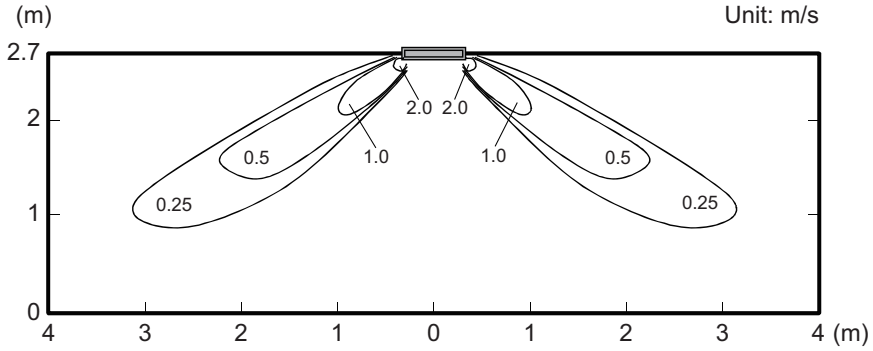

Measuring conditions	Fan speed	Operation mode
NOTE: Reference data	HIGH	HEAT

- **Air velocity distribution**

Side view
Vertical airflow direction louver: Down

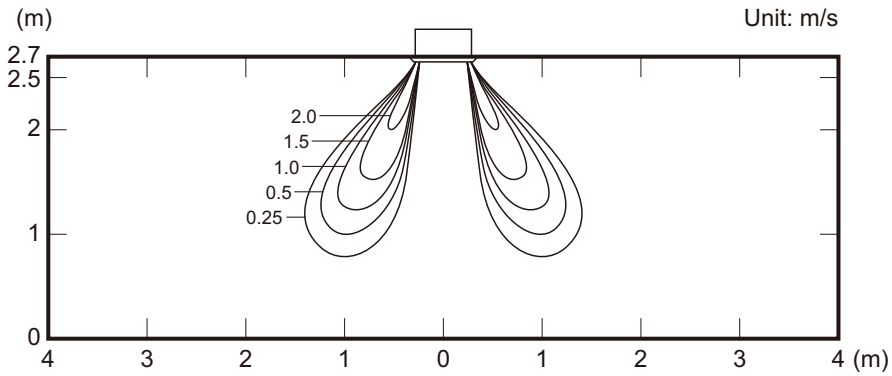

- **Air temperature distribution**

Side view
Vertical airflow direction louver: Down

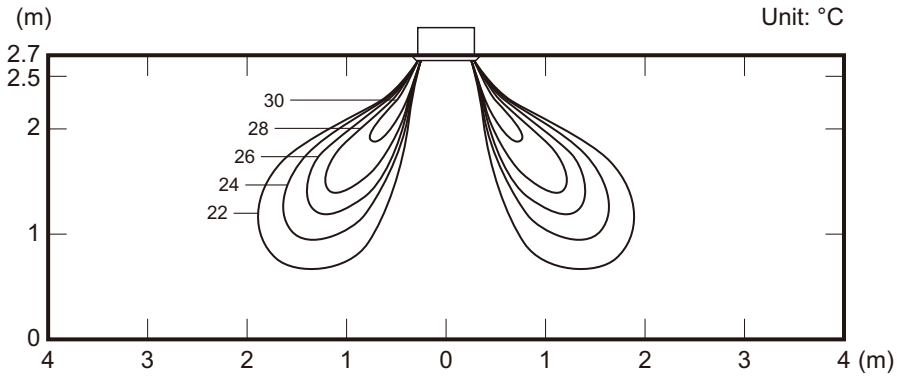

INDOOR UNITS

■ Model: AUXB007GLEH

Measuring conditions	Fan speed	Operation mode
	HIGH	FAN

- **Air velocity distribution**

Top view
Vertical airflow direction louver: Up

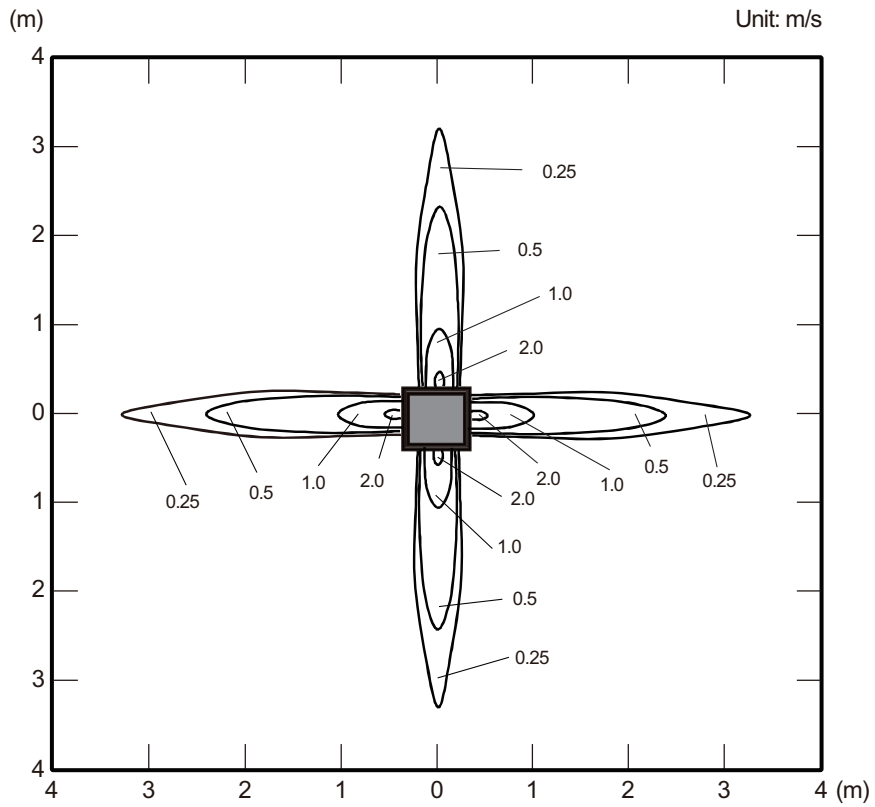

Side view
Vertical airflow direction louver: Up

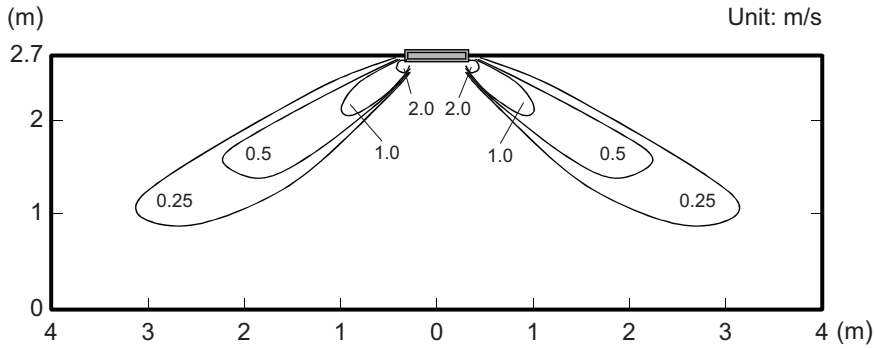

INDOOR UNITS

Measuring conditions	Fan speed	Operation mode
NOTE: Reference data	HIGH	HEAT

- **Air velocity distribution**

Side view
Vertical airflow direction louver: Down

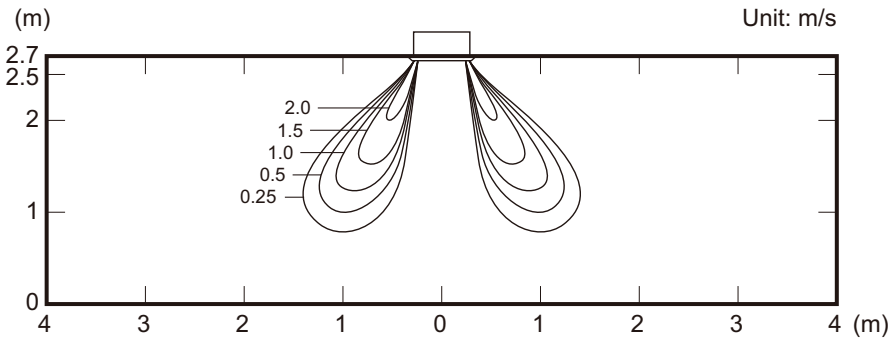

- **Air temperature distribution**

Side view
Vertical airflow direction louver: Down

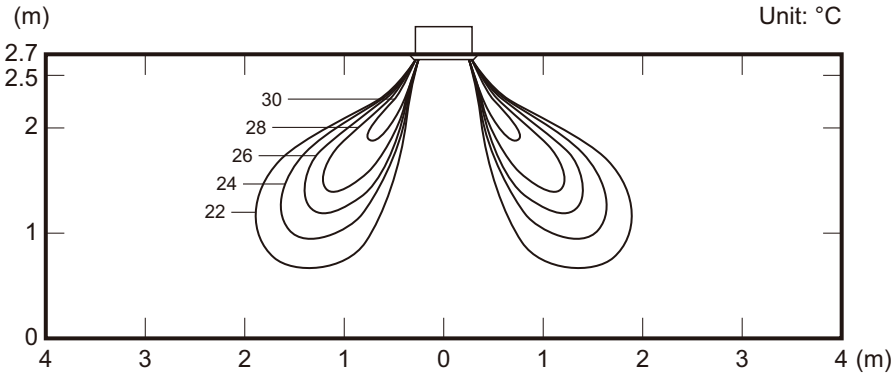

INDOOR UNITS

INDOOR UNITS

■ Model: AUXB009GLEH

Measuring conditions	Fan speed	Operation mode
	HIGH	FAN

- **Air velocity distribution**

Top view
Vertical airflow direction louver: Up

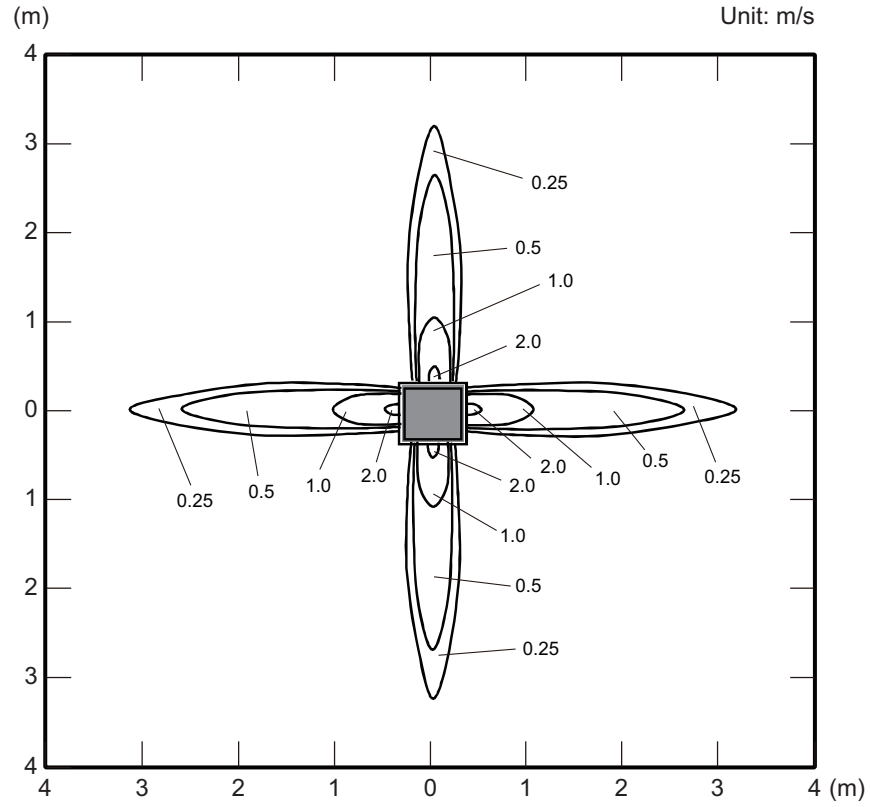

Side view
Vertical airflow direction louver: Up

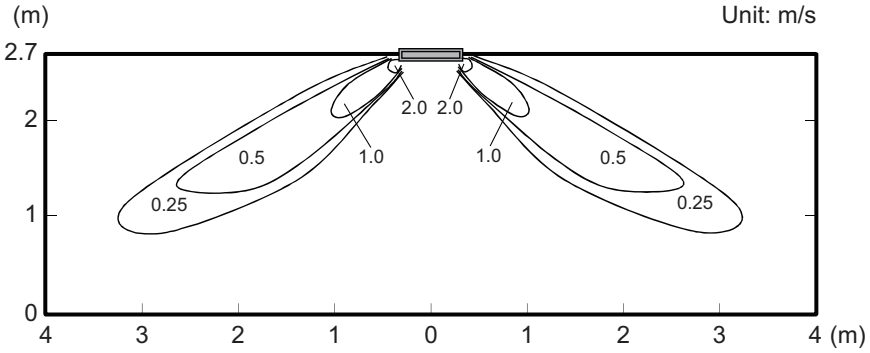

INDOOR UNITS

Measuring conditions	Fan speed	Operation mode
NOTE: Reference data	HIGH	HEAT

- **Air velocity distribution**

Side view
Vertical airflow direction louver: Down

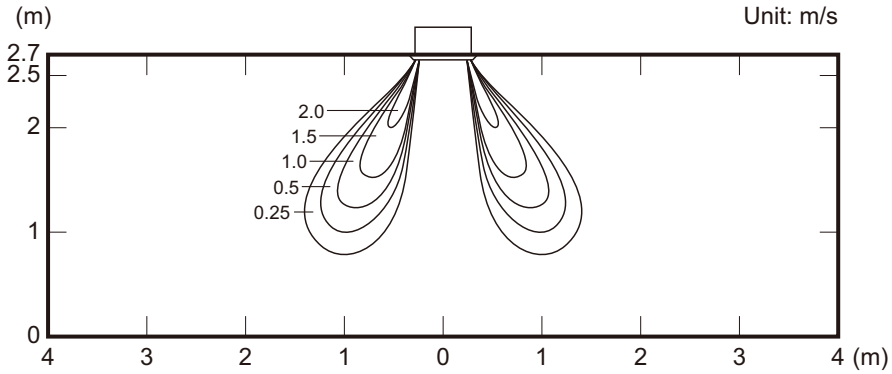

- **Air temperature distribution**

Side view
Vertical airflow direction louver: Down

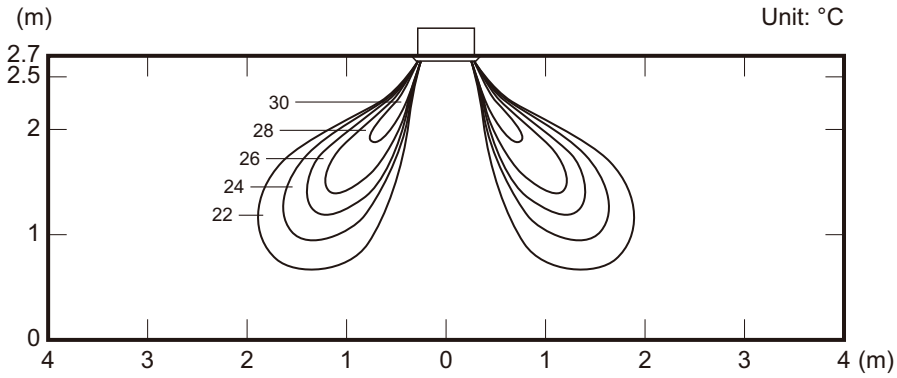

INDOOR UNITS

■ Model: AUXB012GLEH

Measuring conditions	Fan speed	Operation mode
	HIGH	FAN

- **Air velocity distribution**

Top view
Vertical airflow direction louver: Up

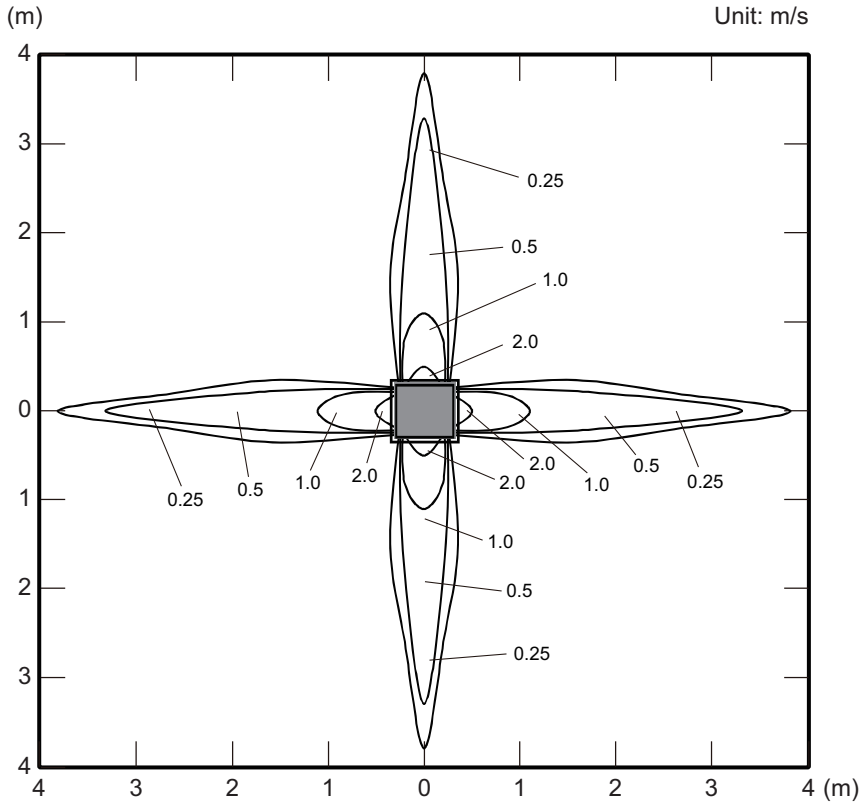

Side view
Vertical airflow direction louver: Up

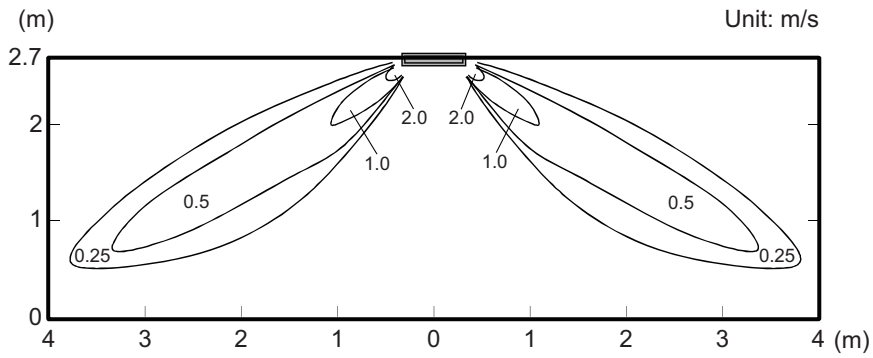

Measuring conditions	Fan speed	Operation mode
NOTE: Reference data	HIGH	HEAT

- **Air velocity distribution**

Side view
Vertical airflow direction louver: Down

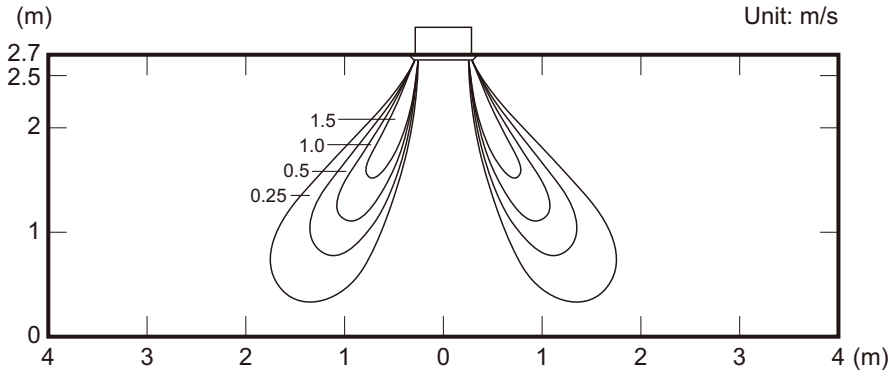

- **Air temperature distribution**

Side view
Vertical airflow direction louver: Down

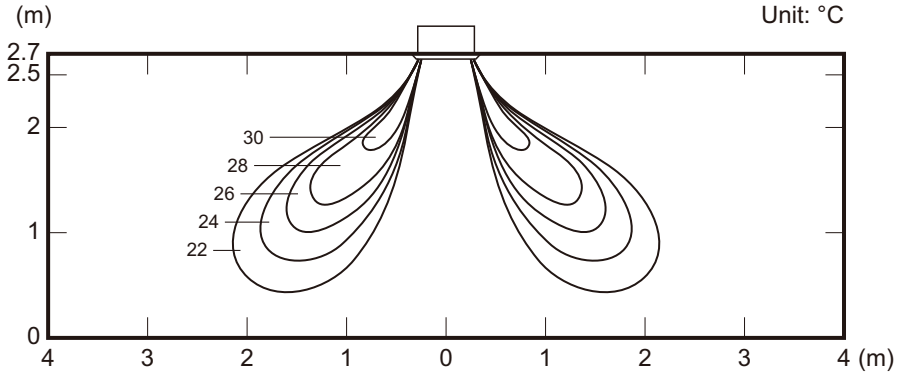

INDOOR UNITS

INDOOR UNITS

■ Model: AUXB014GLEH

Measuring conditions	Fan speed	Operation mode
	HIGH	FAN

- **Air velocity distribution**

Top view
Vertical airflow direction louver: Up

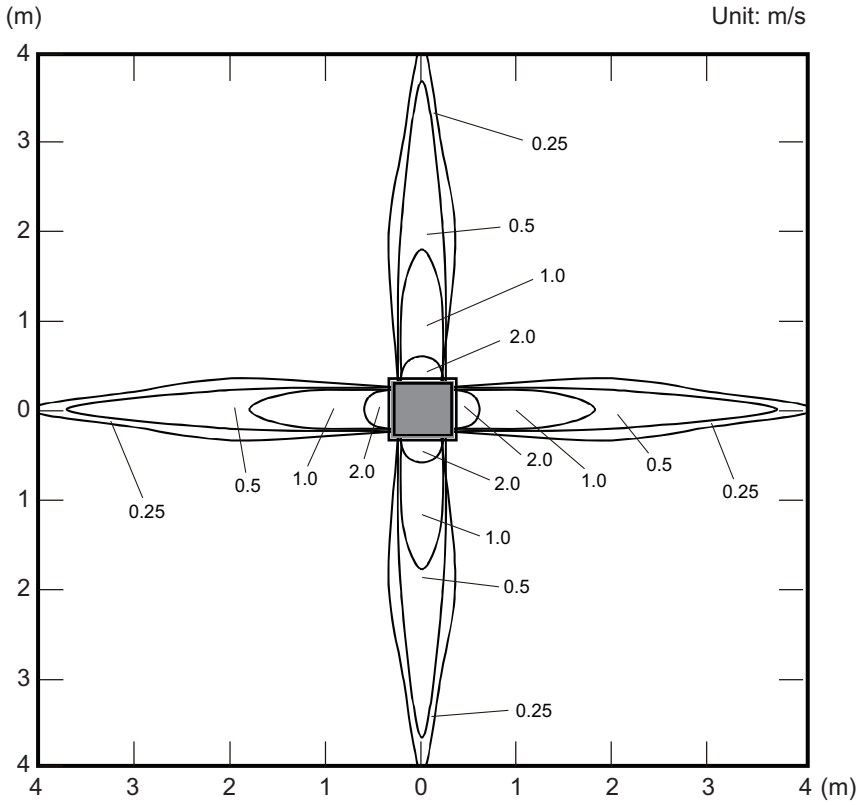

Side view
Vertical airflow direction louver: Up

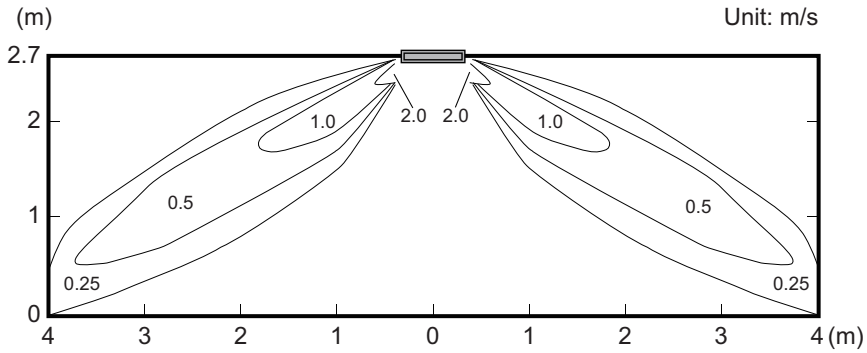

Measuring conditions	Fan speed	Operation mode
NOTE: Reference data	HIGH	HEAT

- **Air velocity distribution**

Side view
Vertical airflow direction louver: Down

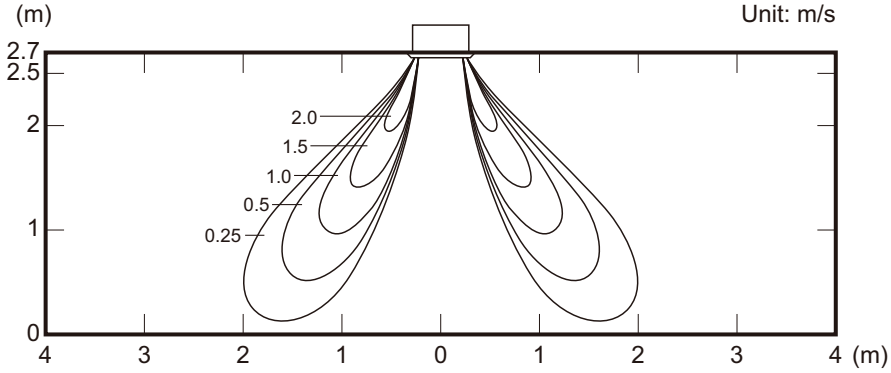

- **Air temperature distribution**

Side view
Vertical airflow direction louver: Down

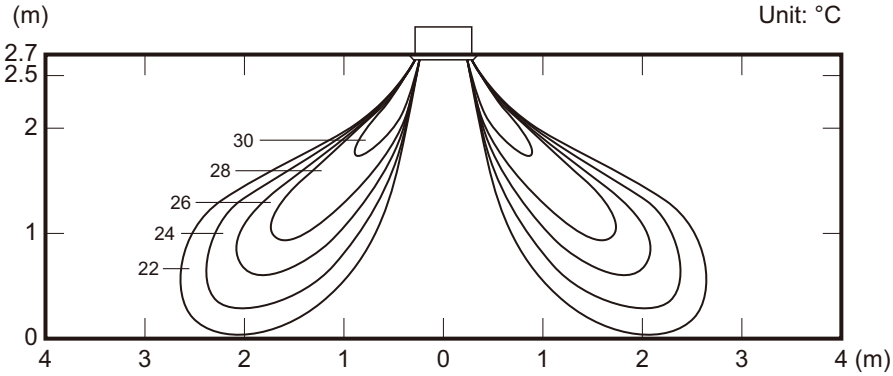

INDOOR UNITS

■ Model: AUXB018GLEH

Measuring conditions	Fan speed	Operation mode
	HIGH	FAN

- **Air velocity distribution**

Top view
Vertical airflow direction louver: Up

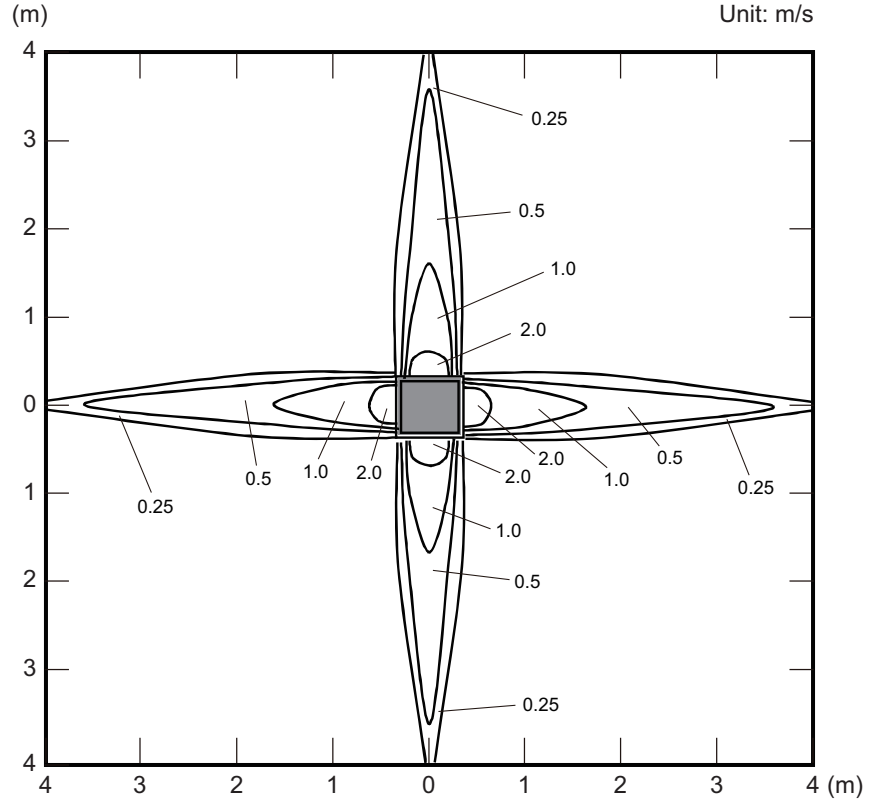

Side view
Vertical airflow direction louver: Up

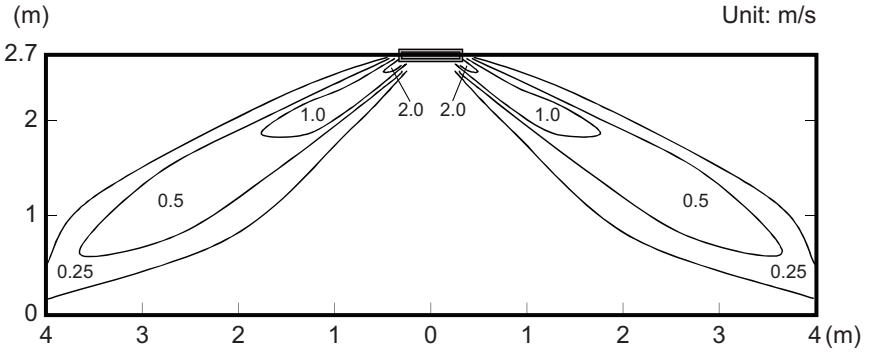

INDOOR UNITS

Measuring conditions	Fan speed	Operation mode
NOTE: Reference data	HIGH	HEAT

- **Air velocity distribution**

Side view
Vertical airflow direction louver: Down

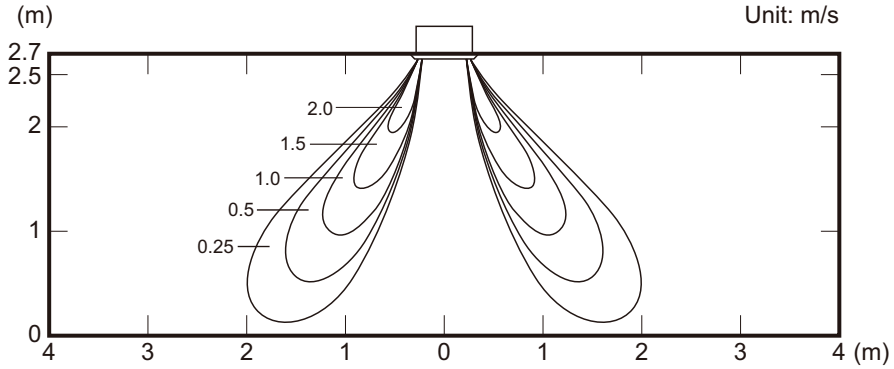

- **Air temperature distribution**

Side view
Vertical airflow direction louver: Down

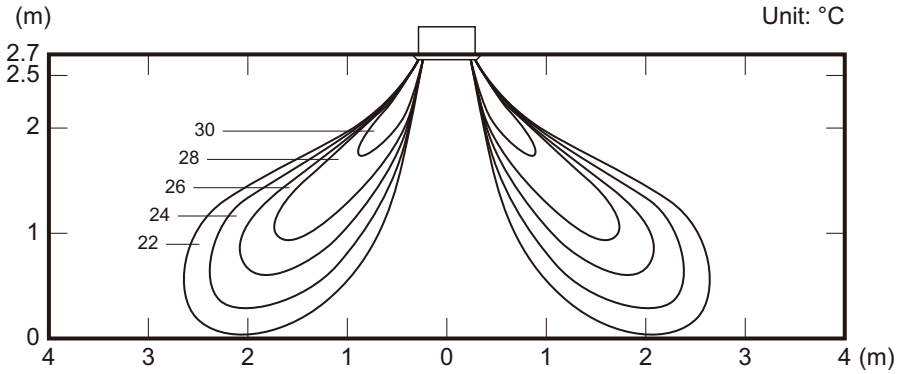

INDOOR UNITS

■ Model: AUXB024GLEH

Measuring conditions	Fan speed	Operation mode
	HIGH	FAN

- **Air velocity distribution**

Top view
Vertical airflow direction louver: Up

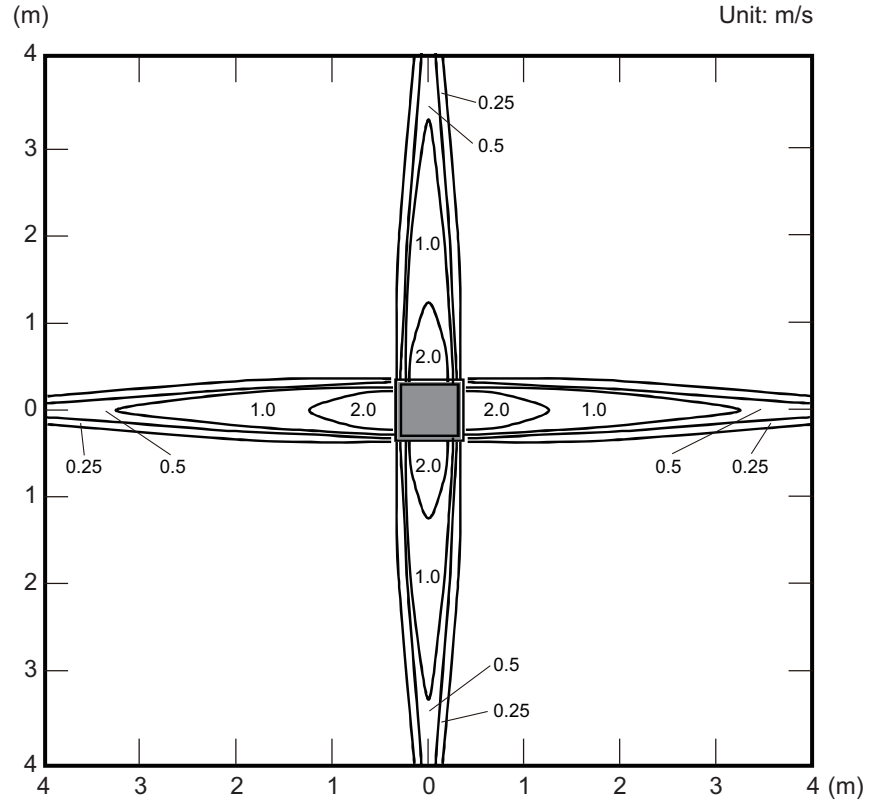

Side view
Vertical airflow direction louver: Up

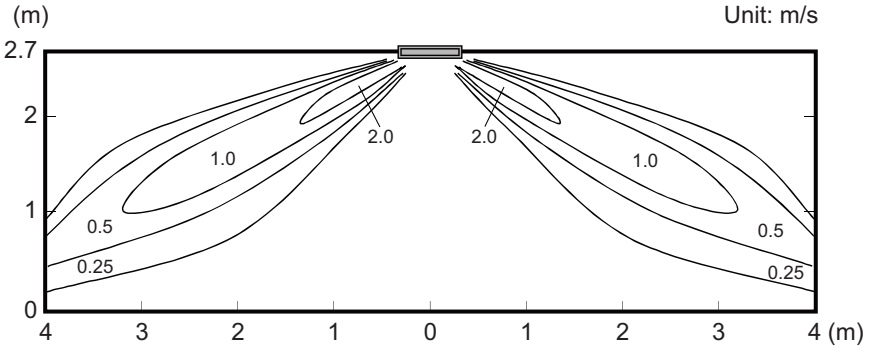

INDOOR UNITS

Measuring conditions	Fan speed	Operation mode
NOTE: Reference data	HIGH	HEAT

- **Air velocity distribution**

Side view
Vertical airflow direction louver: Down

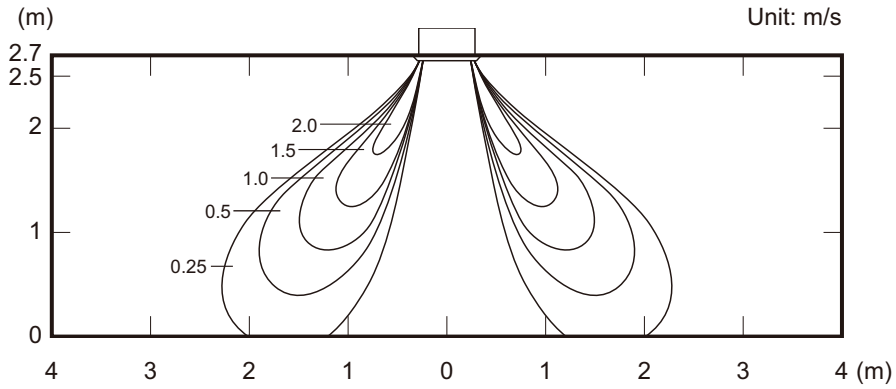

- **Air temperature distribution**

Side view
Vertical airflow direction louver: Down

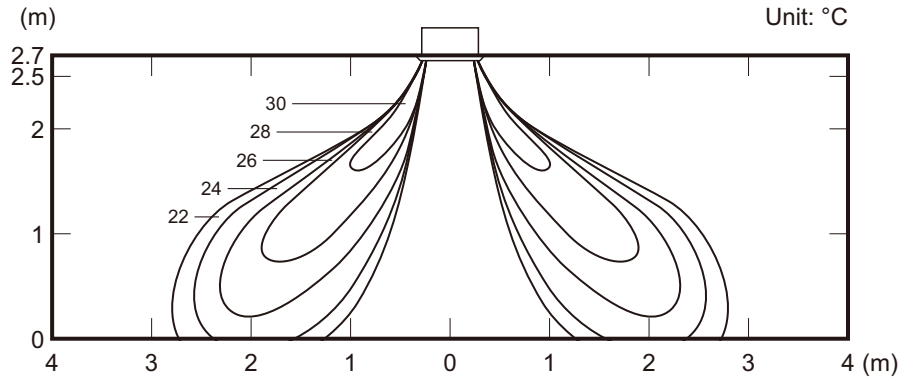

INDOOR UNITS

INDOOR UNITS

6-2. 4-way flow cassette type

■ Model: AUXD18GALH

Measuring conditions	Fan speed	Operation mode
	HIGH	FAN

• Air velocity distribution

Top view
Vertical airflow direction louver: Up

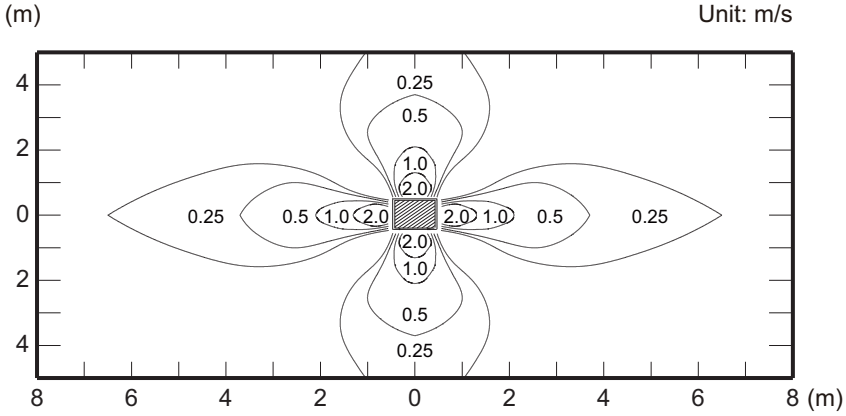

Side view
Vertical airflow direction louver: Up

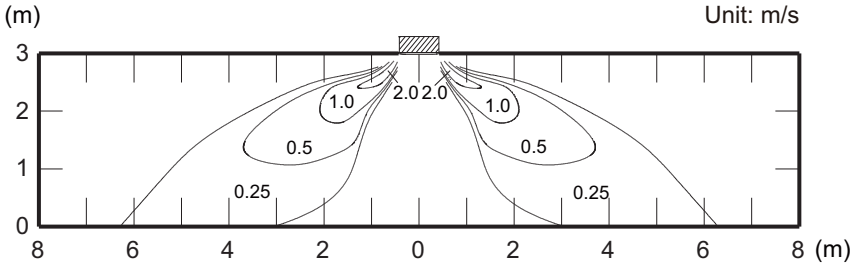

Measuring conditions **NOTE:** Reference data	Fan speed	Operation mode
	HIGH	HEAT

• Air velocity distribution

Side view
Vertical airflow direction louver: Down

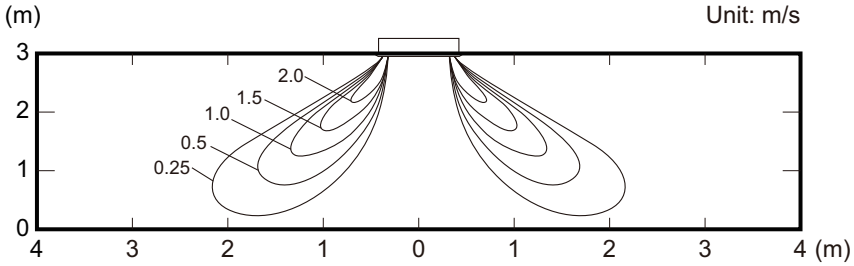

• Air temperature distribution

Side view
Vertical airflow direction louver: Down

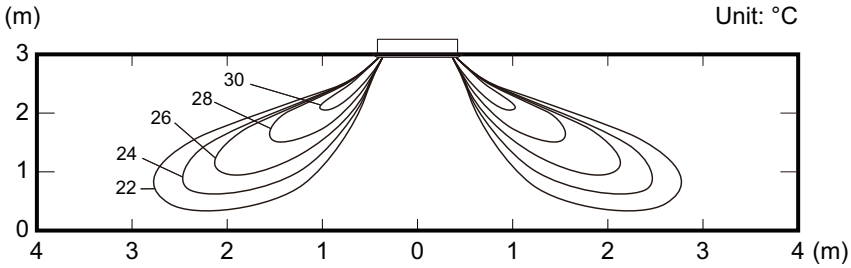

■ Model: AUXD24GALH

Measuring conditions	Fan speed	Operation mode
	HIGH	FAN

• Air velocity distribution

Top view
Vertical airflow direction louver: Up

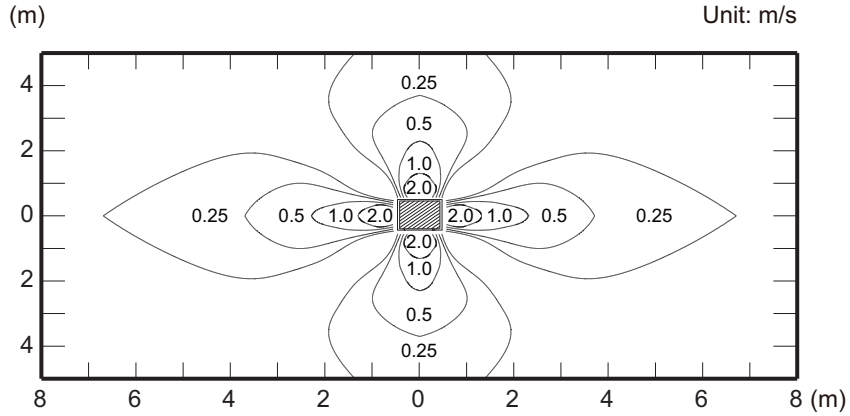

Side view
Vertical airflow direction louver: Up

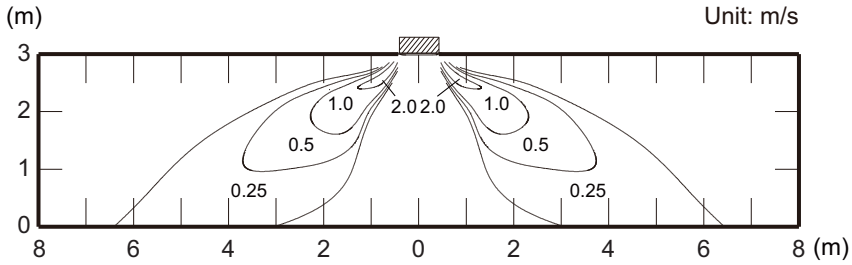

Measuring conditions **NOTE:** Reference data	Fan speed	Operation mode
	HIGH	HEAT

• Air velocity distribution

Side view
Vertical airflow direction louver: Down

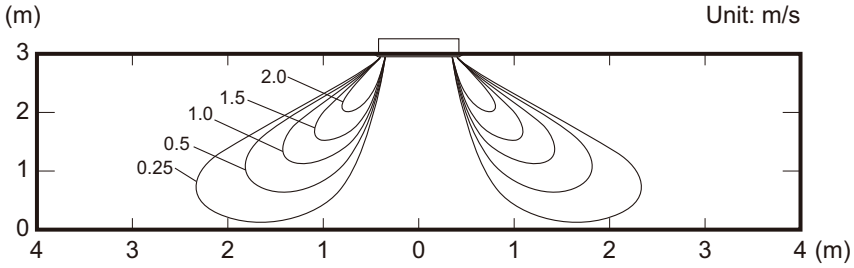

• Air temperature distribution

Side view
Vertical airflow direction louver: Down

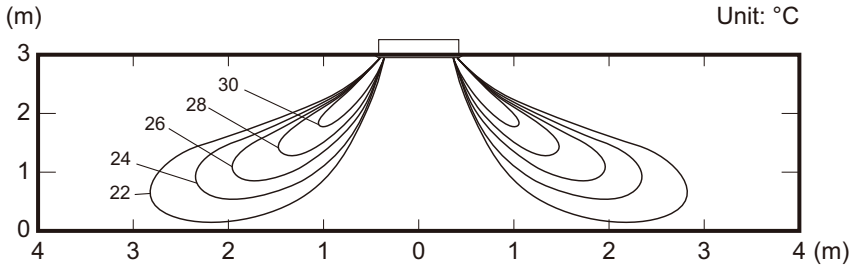

INDOOR UNITS

INDOOR UNITS

■ Model: AUXA30GALH

Measuring conditions	Fan speed	Operation mode
	HIGH	FAN

• Air velocity distribution

Top view
Vertical airflow direction louver: Up

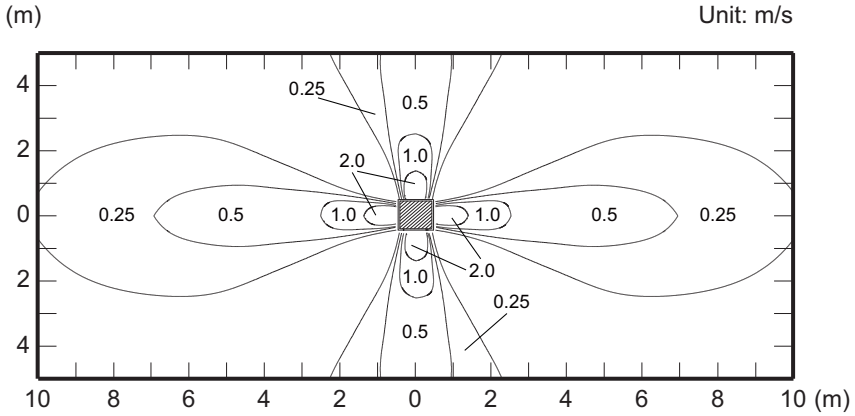

Side view
Vertical airflow direction louver: Up

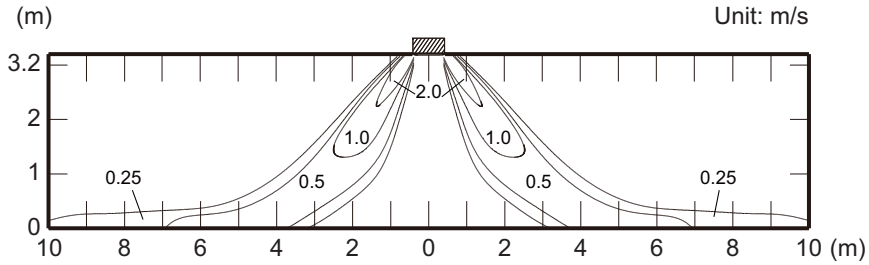

Measuring conditions **NOTE:** Reference data	Fan speed	Operation mode
	HIGH	HEAT

• Air velocity distribution

Side view
Vertical airflow direction louver: Down

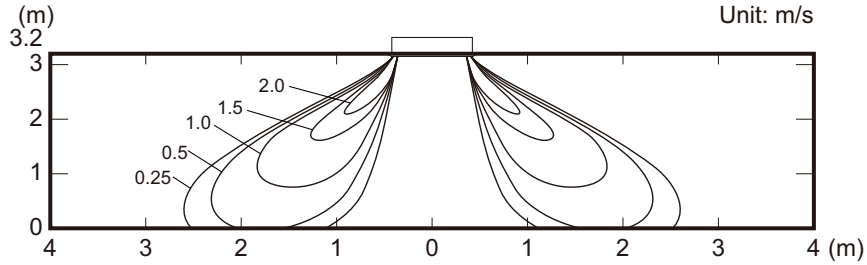

• Air temperature distribution

Side view
Vertical airflow direction louver: Down

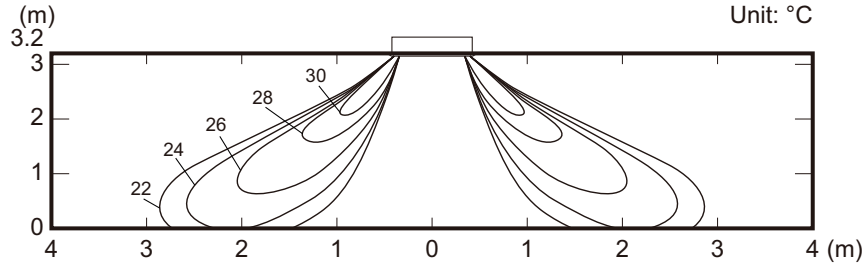

INDOOR UNITS

■ Model: AUXA34GALH

Measuring conditions	Fan speed	Operation mode
	HIGH	FAN

• Air velocity distribution

Top view
Vertical airflow direction louver: Up

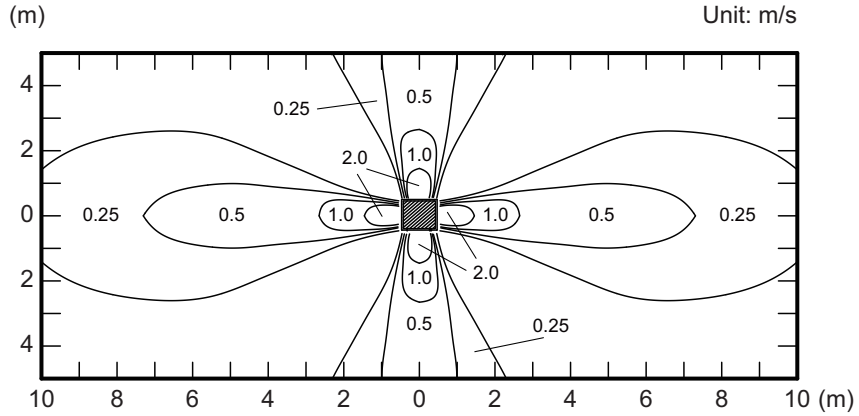

Side view
Vertical airflow direction louver: Up

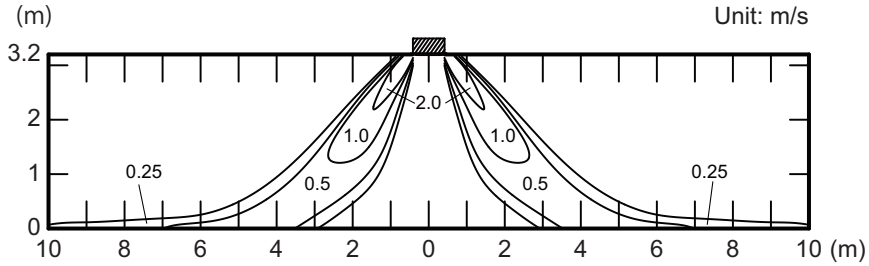

Measuring conditions **NOTE:** Reference data	Fan speed	Operation mode
	HIGH	HEAT

• Air velocity distribution

Side view
Vertical airflow direction louver: Down

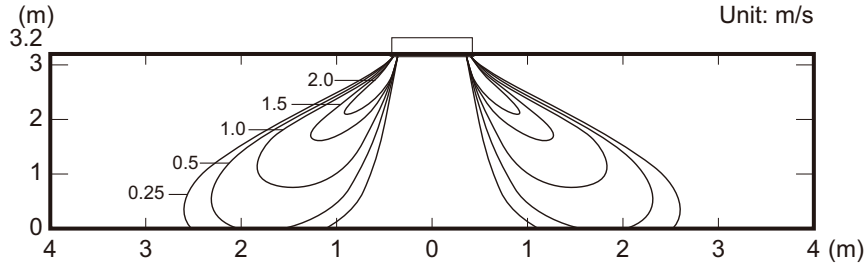

• Air temperature distribution

Side view
Vertical airflow direction louver: Down

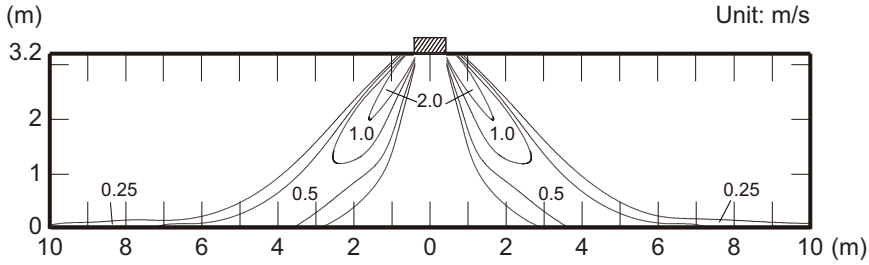

INDOOR UNITS

INDOOR UNITS

■ Model: AUXA36GALH

Measuring conditions	Fan speed	Operation mode
	HIGH	FAN

• Air velocity distribution

Top view
Vertical airflow direction louver: Up

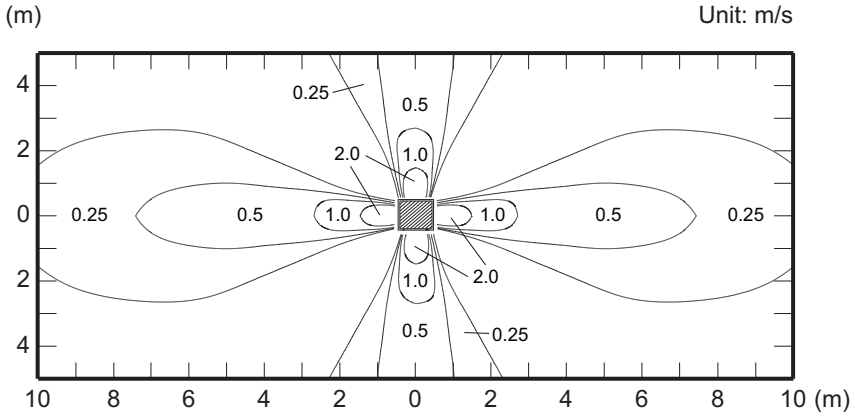

Side view
Vertical airflow direction louver: Up

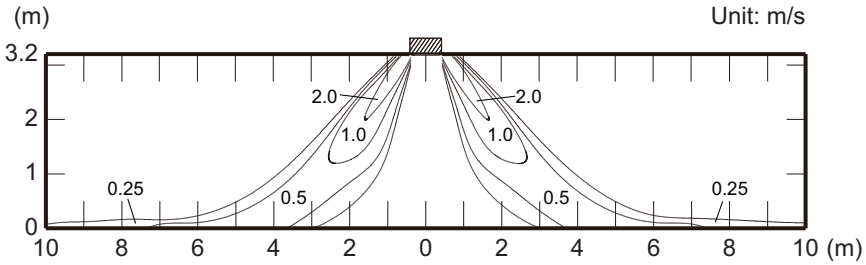

Measuring conditions **NOTE:** Reference data	Fan speed	Operation mode
	HIGH	HEAT

• Air velocity distribution

Side view
Vertical airflow direction louver: Down

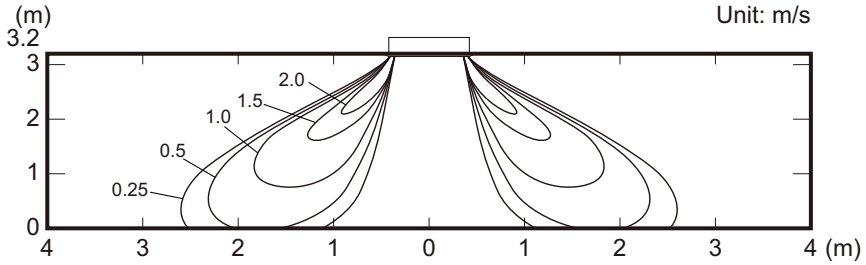

• Air temperature distribution

Side view
Vertical airflow direction louver: Down

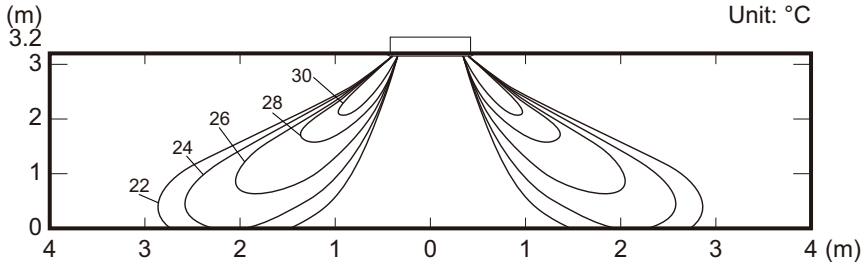

INDOOR UNITS

■ Model: AUXA45GALH

Measuring conditions	Fan speed	Operation mode
	HIGH	FAN

• Air velocity distribution

Top view
Vertical airflow direction louver: Up

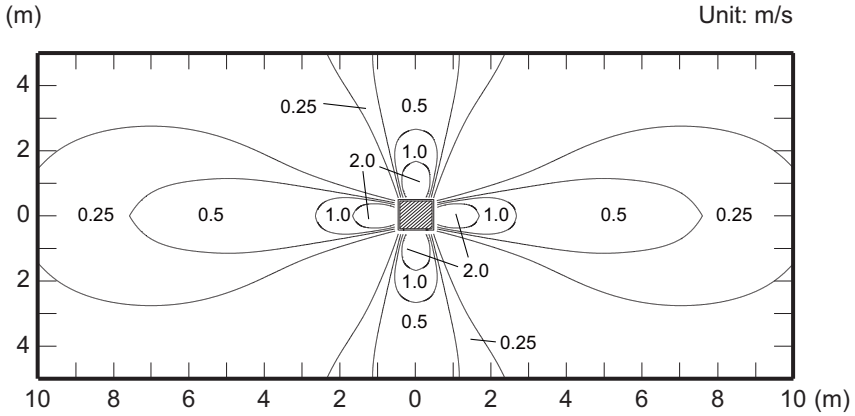

Side view
Vertical airflow direction louver: Up

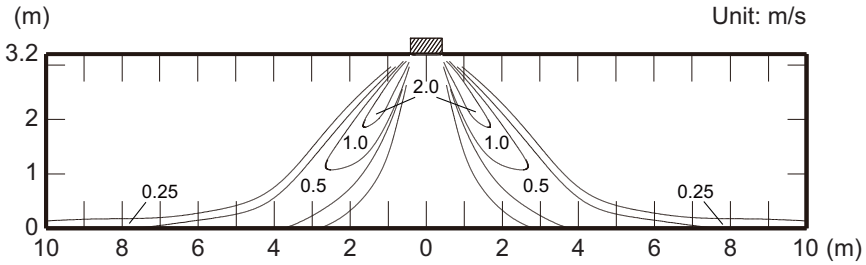

Measuring conditions **NOTE:** Reference data	Fan speed	Operation mode
	HIGH	HEAT

• Air velocity distribution

Side view
Vertical airflow direction louver: Down

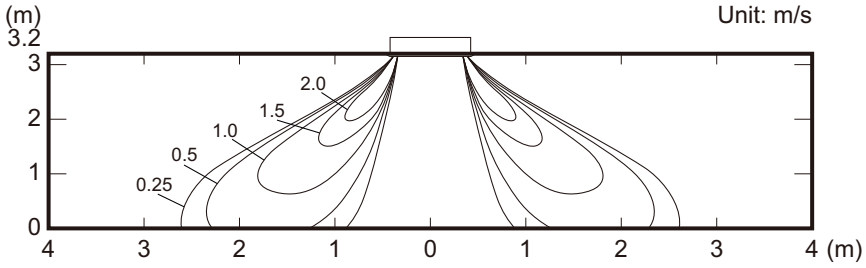

• Air temperature distribution

Side view
Vertical airflow direction louver: Down

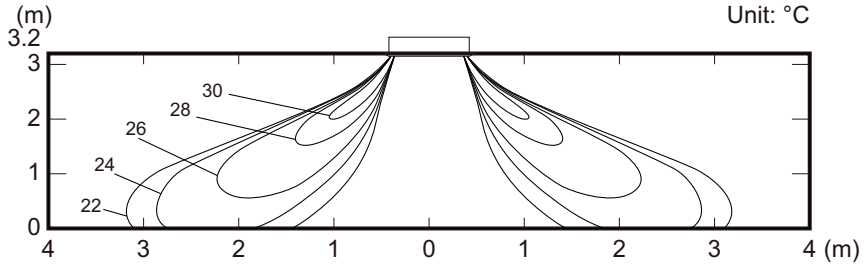

INDOOR UNITS

INDOOR UNITS

■ Model: AUXA54GALH

Measuring conditions	Fan speed	Operation mode
	HIGH	FAN

• Air velocity distribution

Top view
Vertical airflow direction louver: Up

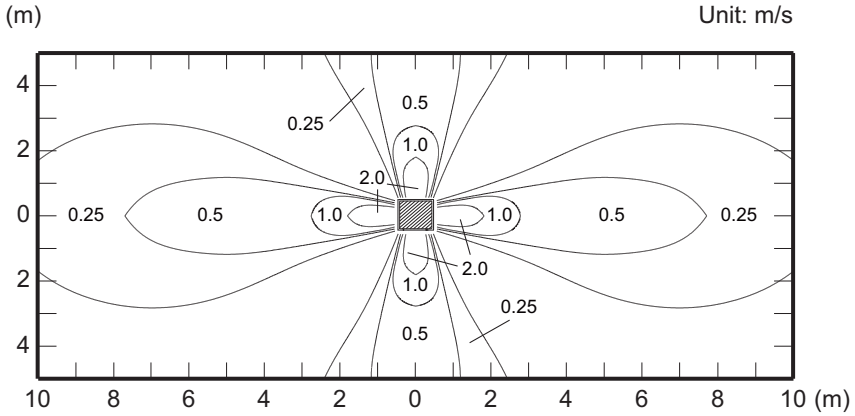

Side view
Vertical airflow direction louver: Up

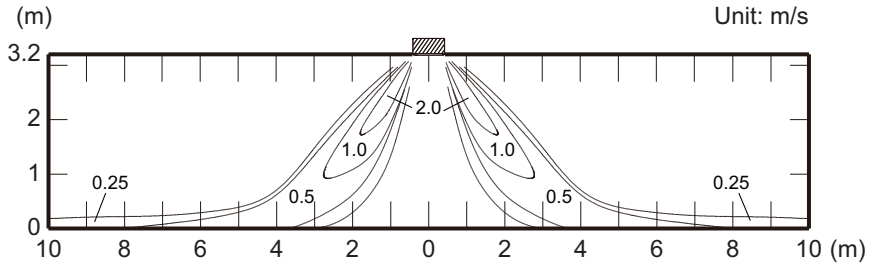

Measuring conditions **NOTE:** Reference data	Fan speed	Operation mode
	HIGH	HEAT

• Air velocity distribution

Side view
Vertical airflow direction louver: Down

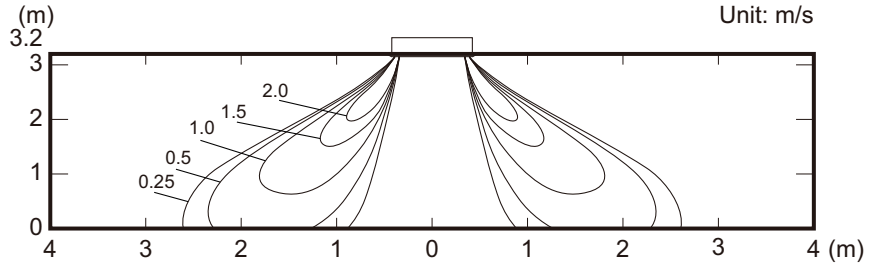

• Air temperature distribution

Side view
Vertical airflow direction louver: Down

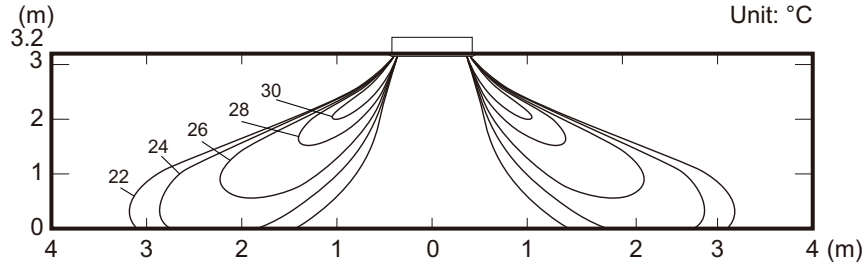

6-3. Circular flow cassette type

■ Models: AUXN009GLAH, AUXN012GLAH, AUXN014GLAH, and AUXM018GLEH

Measuring conditions	Fan speed	Operation mode
	HIGH	FAN

- **Air velocity distribution**

Top view
Vertical airflow direction louver: Position 1

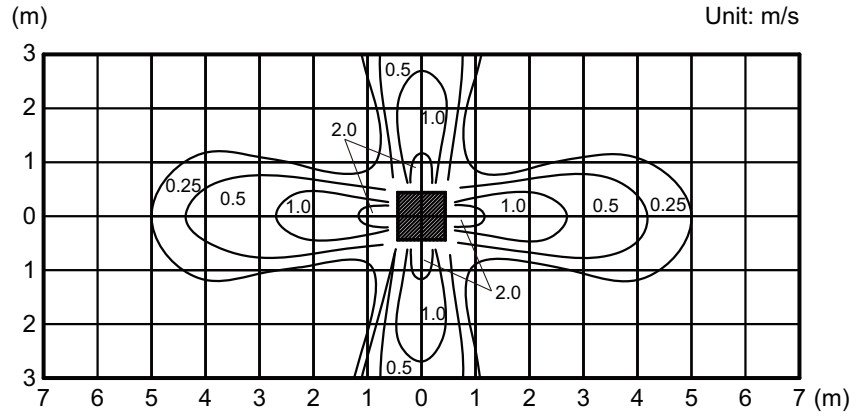

Side view
Vertical airflow direction louver: Position 1

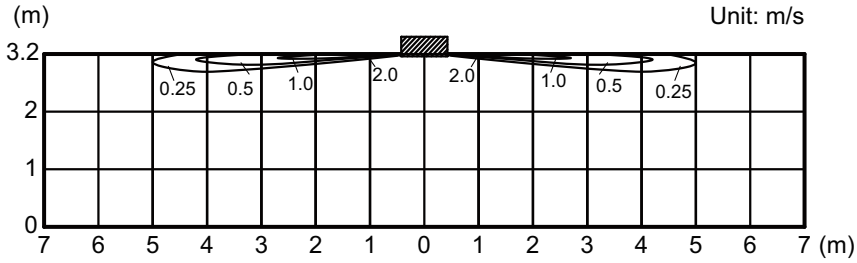

Measuring conditions	Fan speed	Operation mode
NOTE: Reference data	HIGH	HEAT

- **Air velocity distribution**

Side view
Vertical airflow direction louver: Position 2

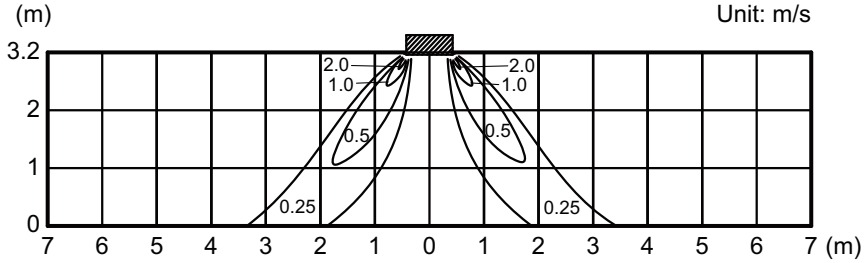

Side view
Vertical airflow direction louver: Position 4

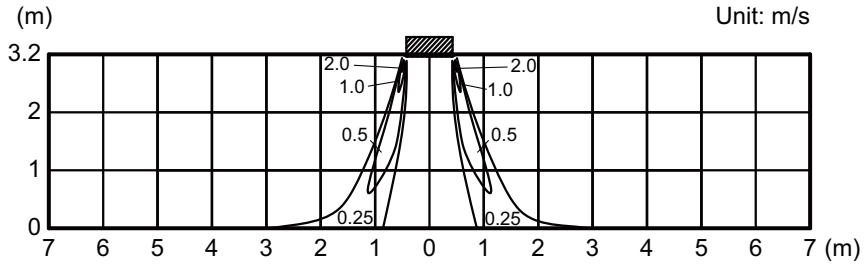

■ Model: AUXM024GLEH

Measuring conditions	Fan speed	Operation mode
	HIGH	FAN

• Air velocity distribution

Top view
Vertical airflow direction louver: Position 1

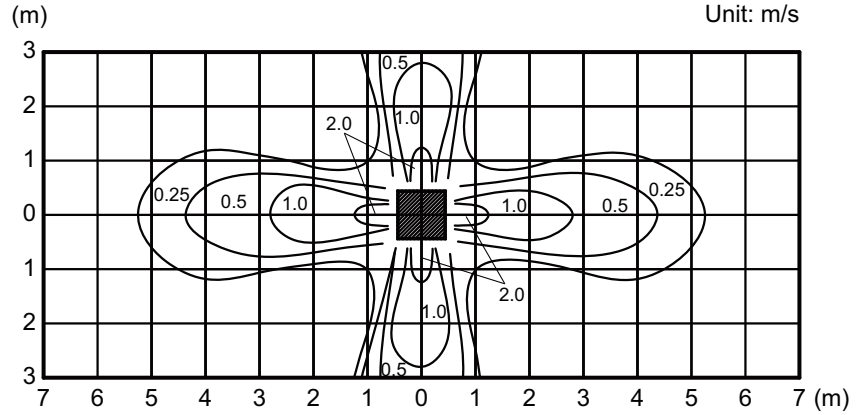

Side view
Vertical airflow direction louver: Position 1

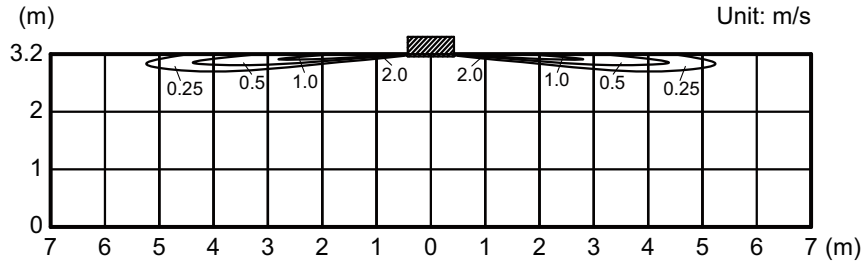

Measuring conditions	Fan speed	Operation mode
NOTE: Reference data	HIGH	HEAT

• Air velocity distribution

Side view
Vertical airflow direction louver: Position 2

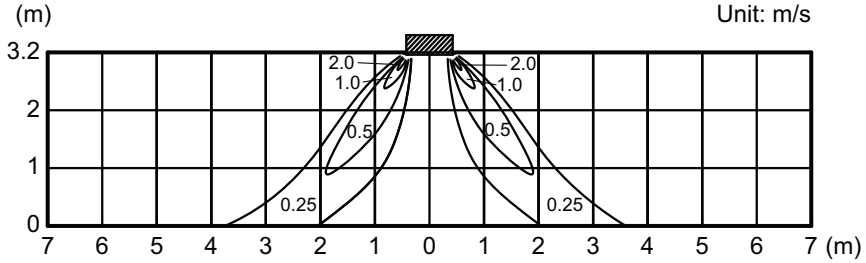

Side view
Vertical airflow direction louver: Position 4

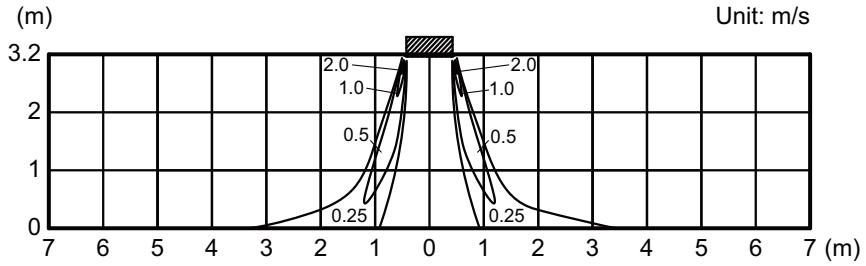

INDOOR UNITS

INDOOR UNITS

■ Model: AUXM030GLEH

Measuring conditions	Fan speed	Operation mode
	HIGH	FAN

• Air velocity distribution

Top view
Vertical airflow direction louver: Position 1

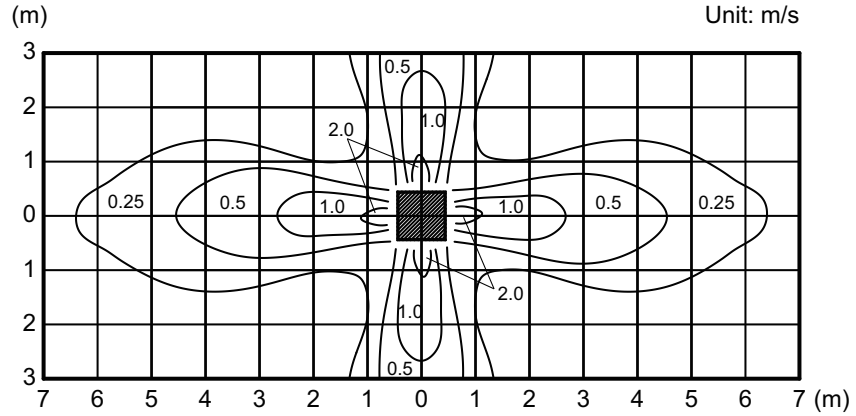

Side view
Vertical airflow direction louver: Position 1

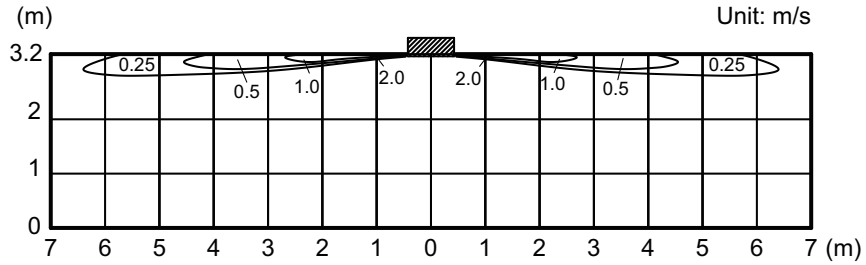

Measuring conditions	Fan speed	Operation mode
NOTE: Reference data	HIGH	HEAT

• Air velocity distribution

Side view
Vertical airflow direction louver: Position 2

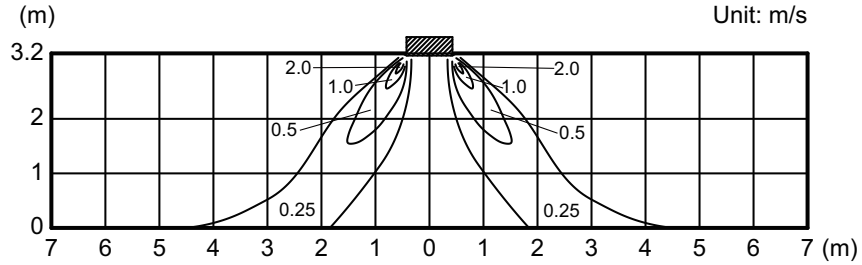

Side view
Vertical airflow direction louver: Position 4

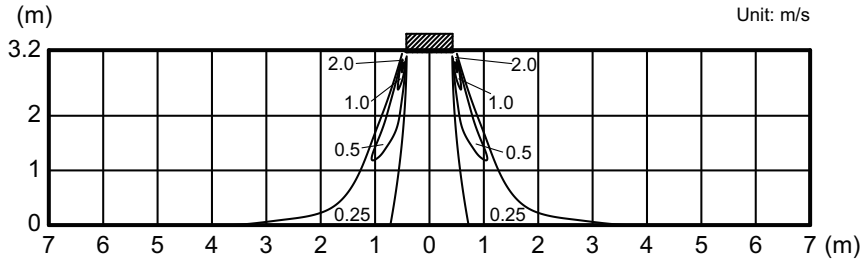

INDOOR UNITS

INDOOR UNITS

■ Models: AUXK018GLEH and AUXK024GLEH

Measuring conditions	Fan speed	Operation mode
	HIGH	FAN

• Air velocity distribution

Top view
Vertical airflow direction louver: Position 1

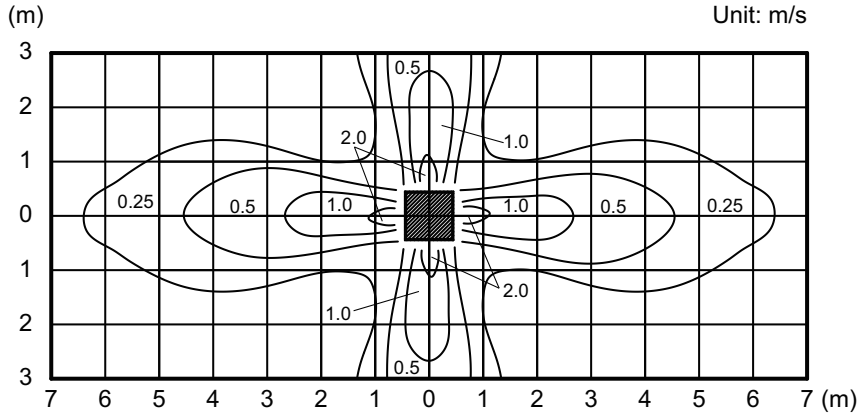

Side view
Vertical airflow direction louver: Position 1

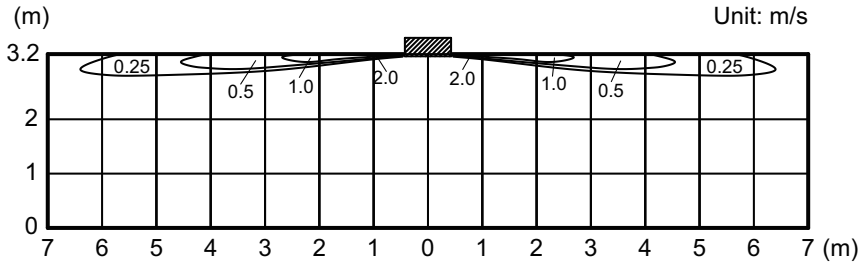

Measuring conditions	Fan speed	Operation mode
NOTE: Reference data	HIGH	HEAT

• Air velocity distribution

Side view
Vertical airflow direction louver: Position 2

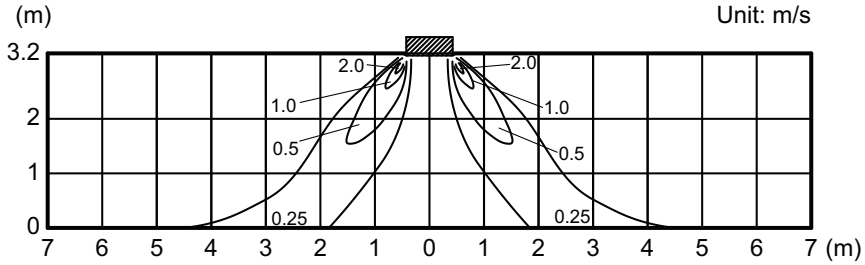

Side view
Vertical airflow direction louver: Position 4

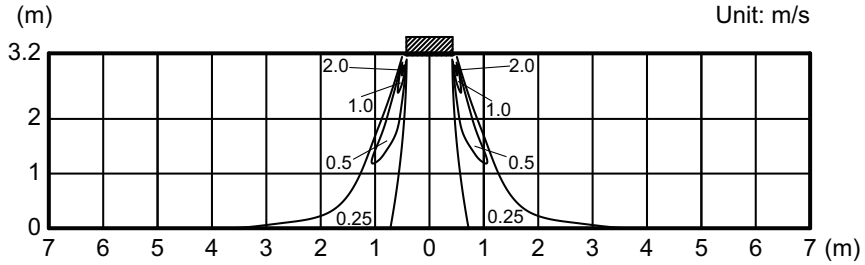

INDOOR UNITS

INDOOR UNITS

■ Models: AUXK030GLEH and AUXK034GLEH

Measuring conditions	Fan speed	Operation mode
	HIGH	FAN

• Air velocity distribution

Top view
Vertical airflow direction louver: Position 1

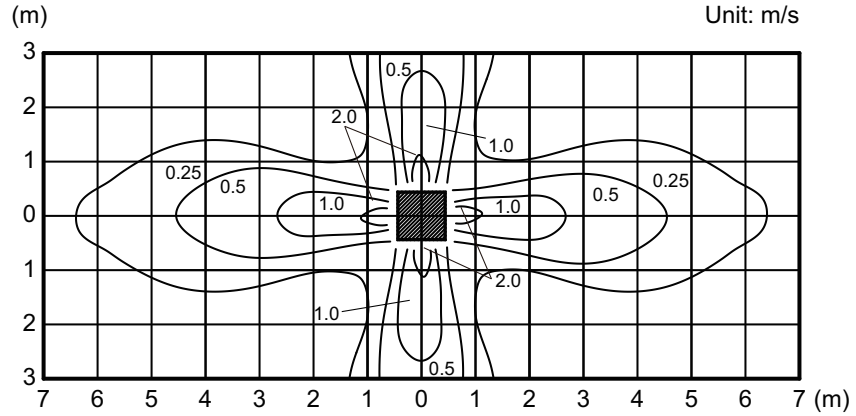

Side view
Vertical airflow direction louver: Position 1

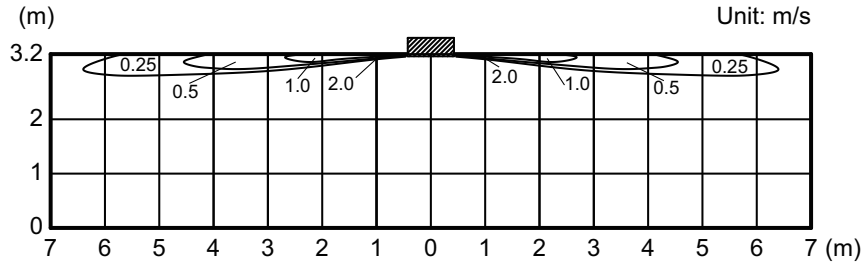

Measuring conditions **NOTE:** Reference data	Fan speed	Operation mode
	HIGH	HEAT

• Air velocity distribution

Side view
Vertical airflow direction louver: Position 2

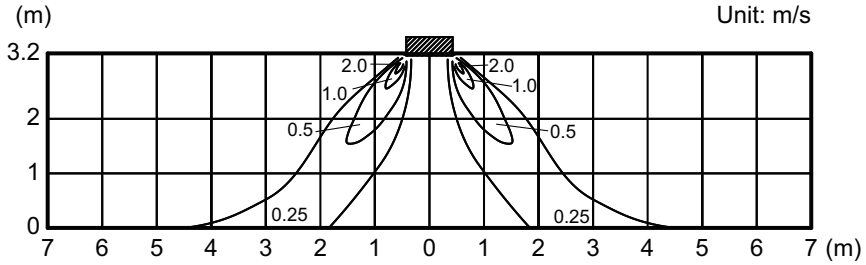

Side view
Vertical airflow direction louver: Position 4

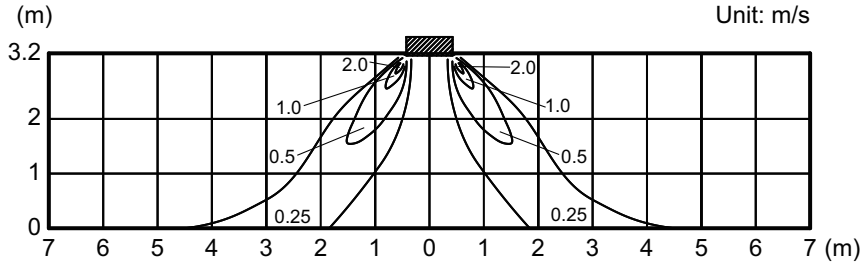

INDOOR UNITS

INDOOR UNITS

■ Model: AUXK036GLEH

Measuring conditions	Fan speed	Operation mode
	HIGH	FAN

• Air velocity distribution

Top view
Vertical airflow direction louver: Position 1

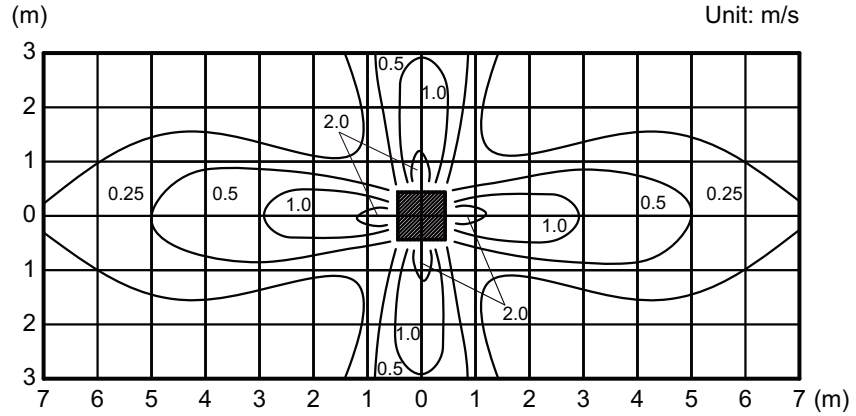

Side view
Vertical airflow direction louver: Position 1

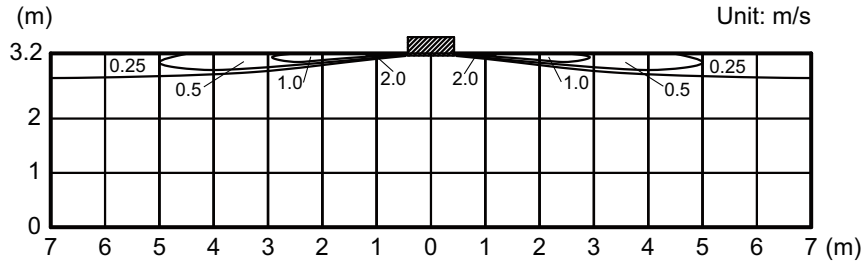

Measuring conditions **NOTE:** Reference data	Fan speed	Operation mode
	HIGH	HEAT

• Air velocity distribution

Side view
Vertical airflow direction louver: Position 2

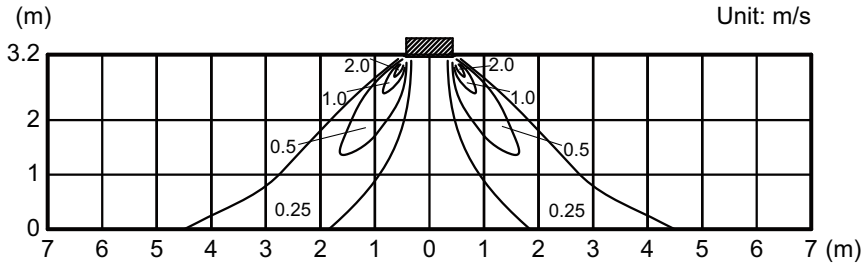

Side view
Vertical airflow direction louver: Position 4

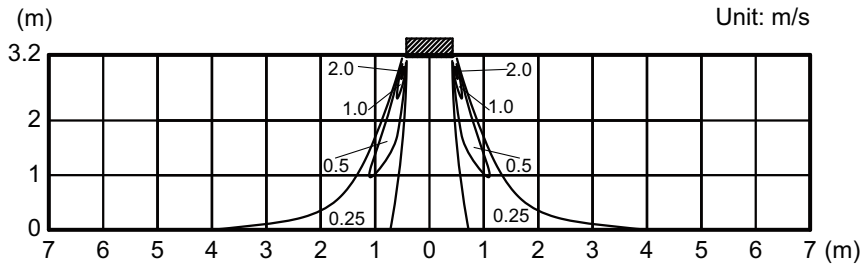

INDOOR UNITS

INDOOR UNITS

■ Model: AUXK045GLEH

Measuring conditions	Fan speed	Operation mode
	HIGH	FAN

• Air velocity distribution

Top view
Vertical airflow direction louver: Position 1

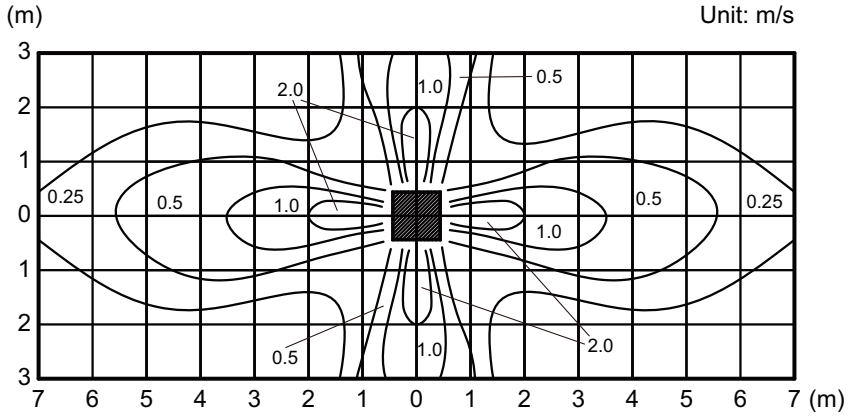

Side view
Vertical airflow direction louver: Position 1

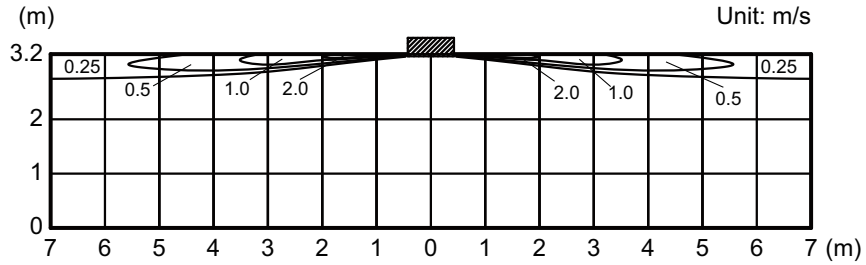

Measuring conditions **NOTE:** Reference data	Fan speed	Operation mode
	HIGH	HEAT

• Air velocity distribution

Side view
Vertical airflow direction louver: Position 2

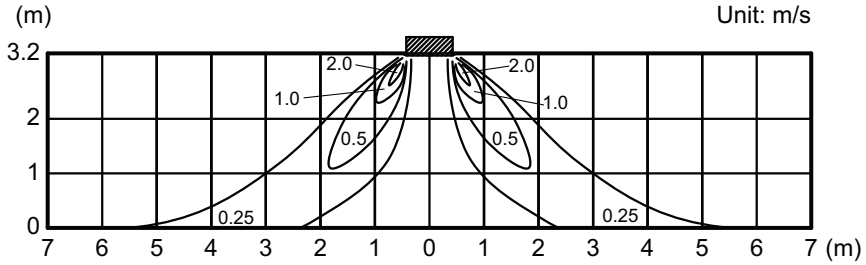

Side view
Vertical airflow direction louver: Position 4

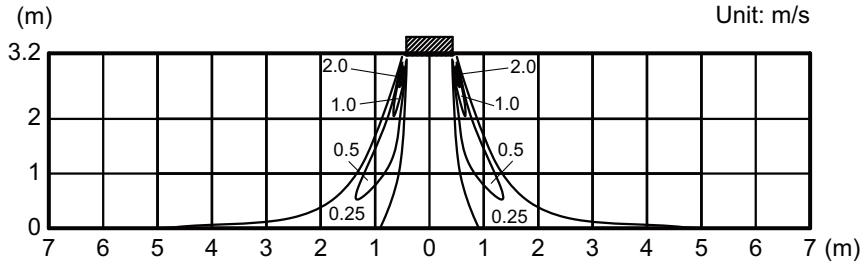

INDOOR UNITS

■ Model: AUXK054GLEH

Measuring conditions	Fan speed	Operation mode
	HIGH	FAN

• Air velocity distribution

Top view
Vertical airflow direction louver: Position 1

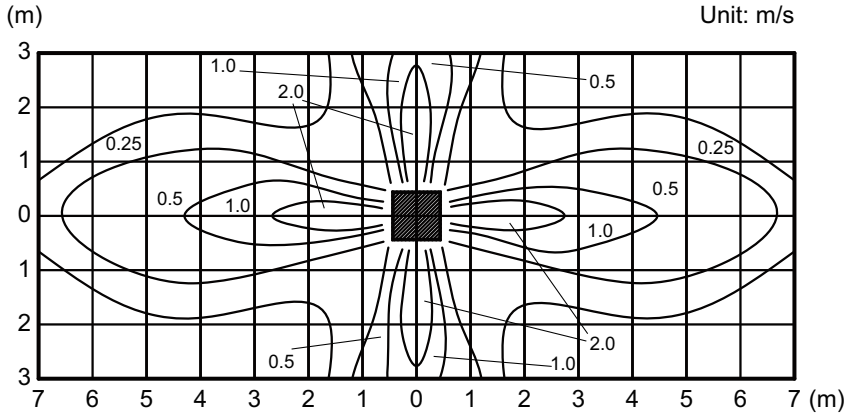

Side view
Vertical airflow direction louver: Position 1

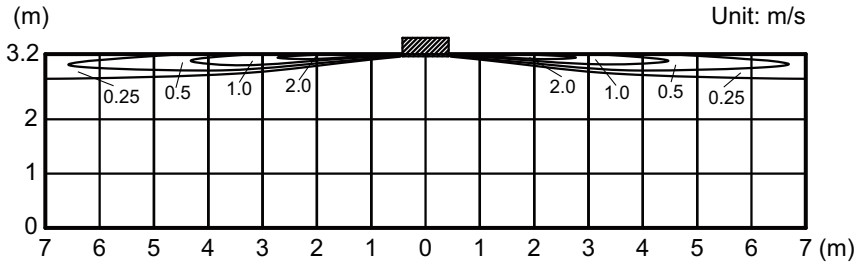

Measuring conditions	Fan speed	Operation mode
NOTE: Reference data	HIGH	HEAT

• Air velocity distribution

Side view
Vertical airflow direction louver: Position 2

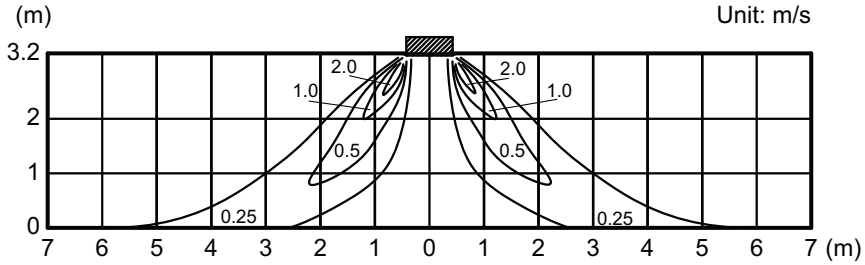

Side view
Vertical airflow direction louver: Position 4

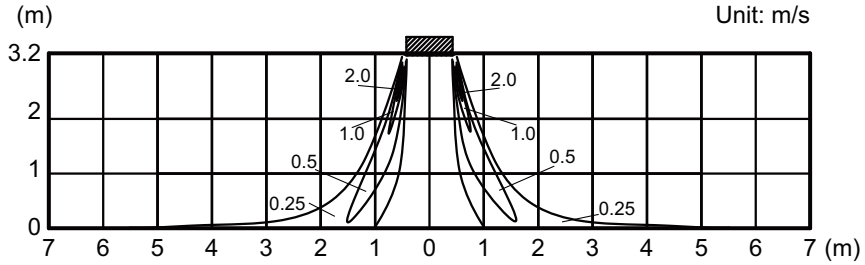

INDOOR UNITS

INDOOR UNITS

6-4. 3D flow cassette type

■ Model: AUXS018GLEH

Measuring conditions	Fan speed	Operation mode
	HIGH	FAN

- **Comfort airflow operation: Cooling**

Top view
Vertical airflow direction louver: Up

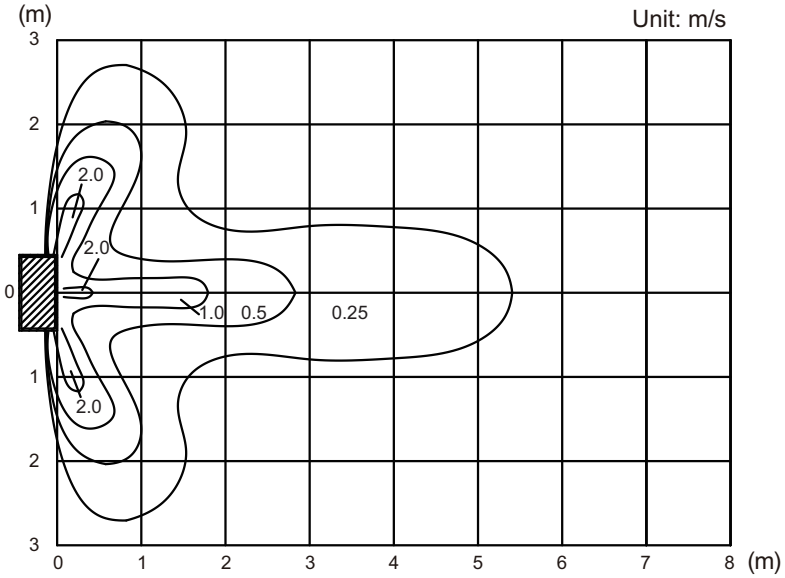

Side view
Vertical airflow direction louver: Up

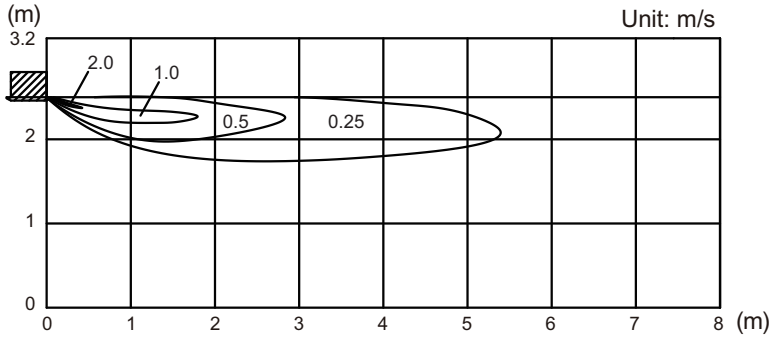

INDOOR UNITS

INDOOR UNITS

Measuring conditions	Fan speed	Operation mode
	HIGH	FAN

- **Comfort airflow operation: Heating**

Top view
Vertical airflow direction louver: Down

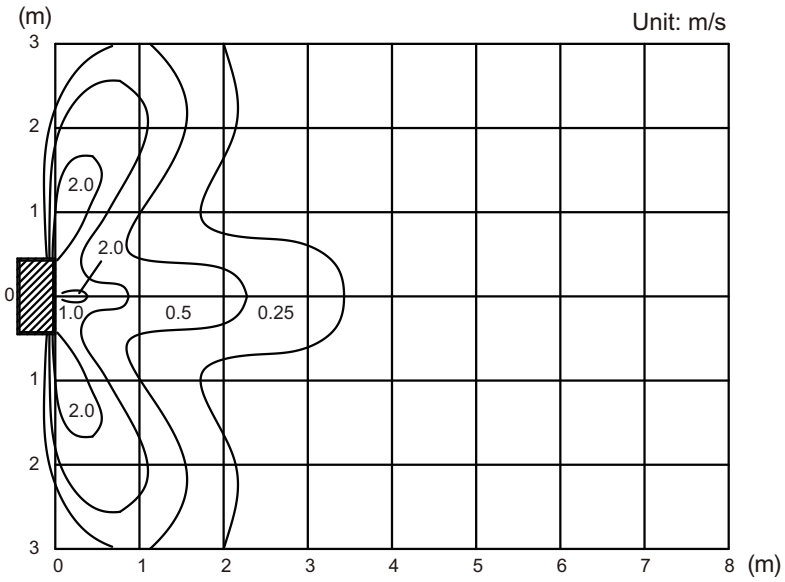

Side view
Vertical airflow direction louver: Down

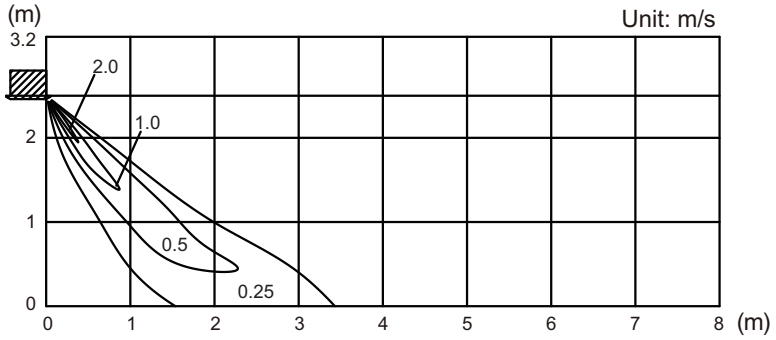

INDOOR UNITS

Measuring conditions	Fan speed	Operation mode
	HIGH	FAN

- **Horizontal airflow direction louver: Center**

Top view
Vertical airflow direction louver: Up

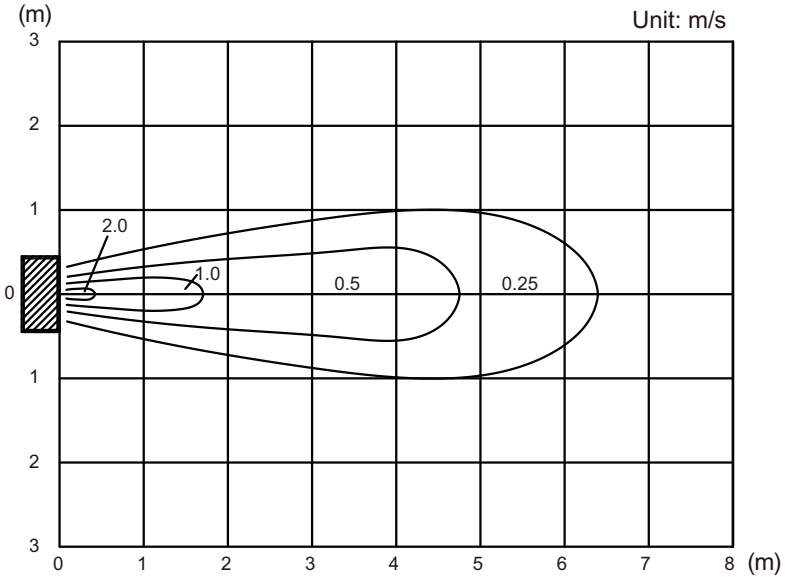

Side view
Vertical airflow direction louver: Up

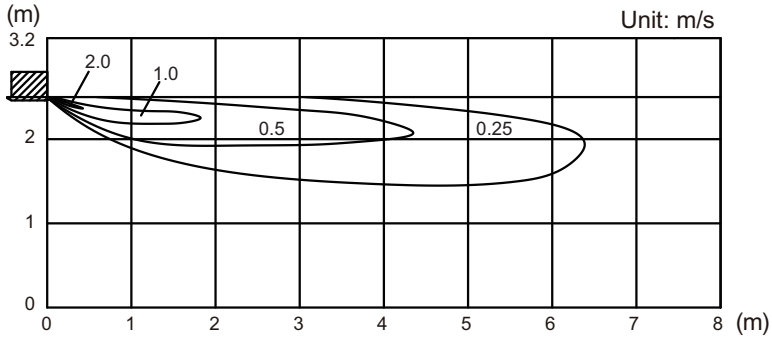

INDOOR UNITS

Measuring conditions	Fan speed	Operation mode
	HIGH	FAN

Top view
Vertical airflow direction louver: Down

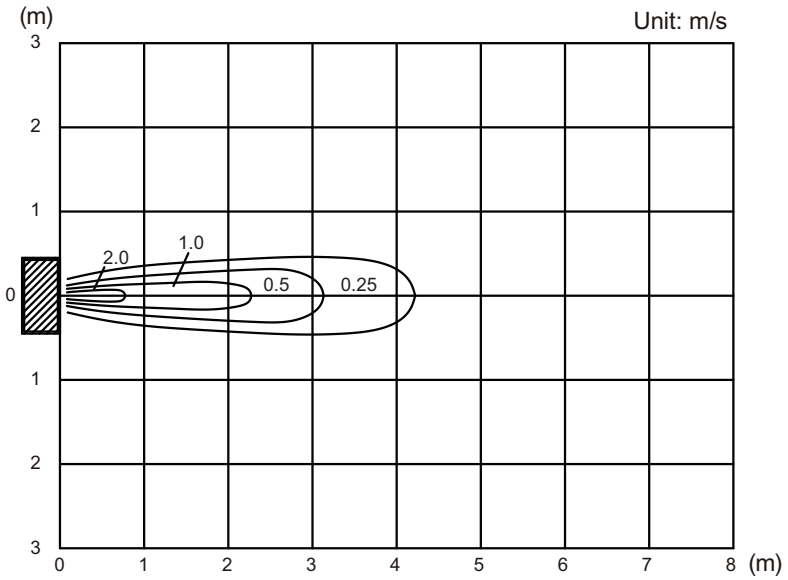

Side view
Vertical airflow direction louver: Down

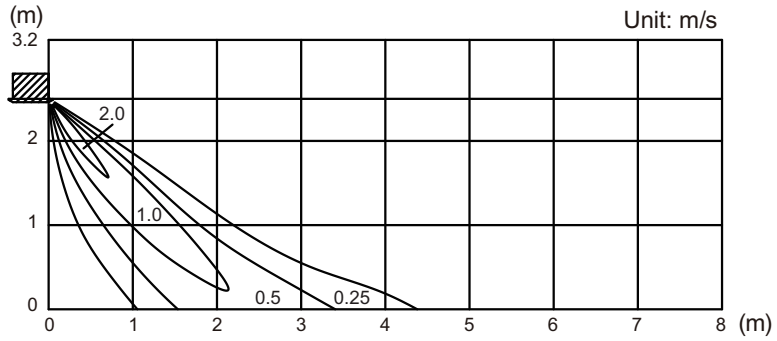

INDOOR UNITS

Measuring conditions	Fan speed	Operation mode
	HIGH	FAN

- **Horizontal airflow direction louver: Right**

Top view
Vertical airflow direction louver: Up

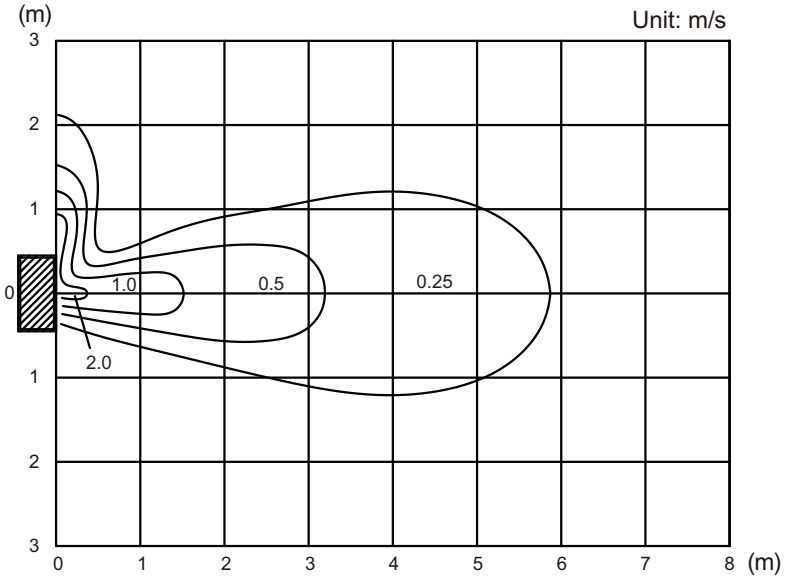

Side view
Vertical airflow direction louver: Up

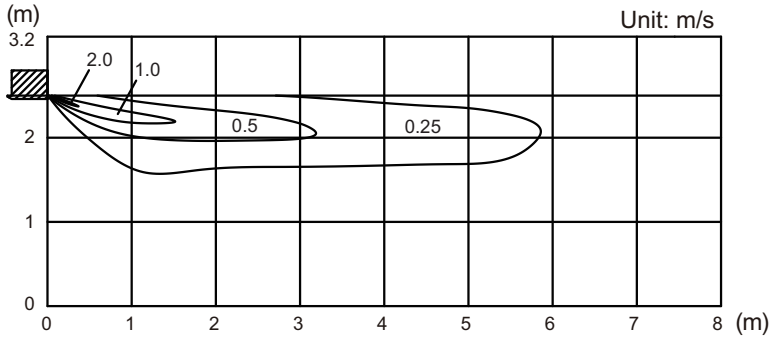

INDOOR UNITS

INDOOR UNITS

Measuring conditions	Fan speed	Operation mode
	HIGH	FAN

- **Horizontal airflow direction louver: Left**

Top view
Vertical airflow direction louver: Up

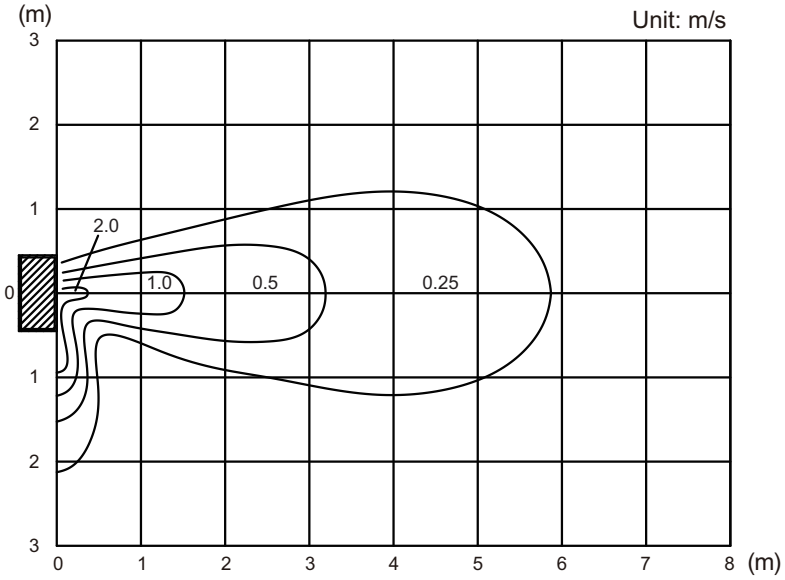

Side view
Vertical airflow direction louver: Up

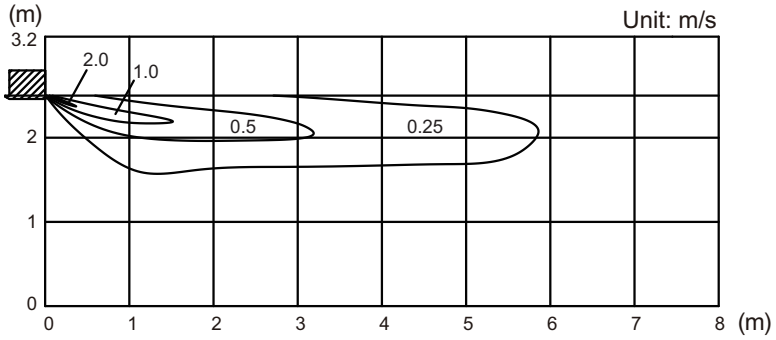

INDOOR UNITS

■ Model: AUXS024GLEH

Measuring conditions	Fan speed	Operation mode
	HIGH	FAN

- **Comfort airflow operation: Cooling**

Top view
Vertical airflow direction louver: Up

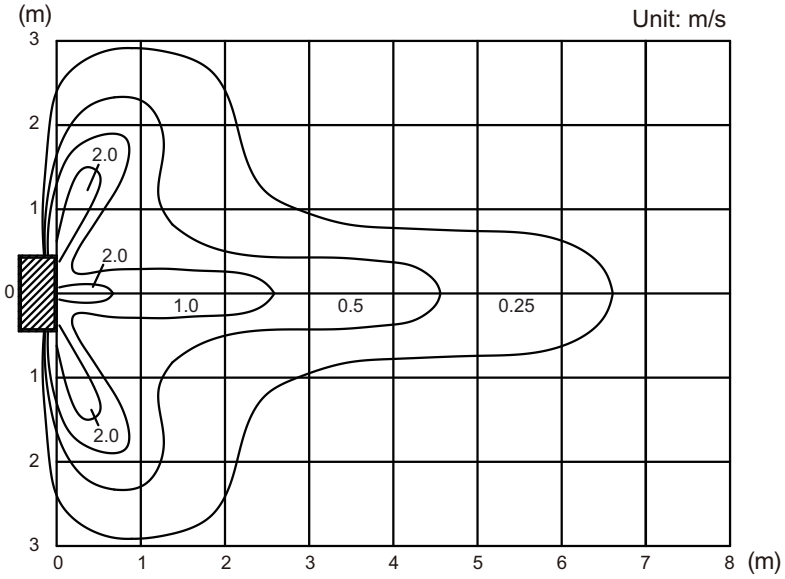

Side view
Vertical airflow direction louver: Up

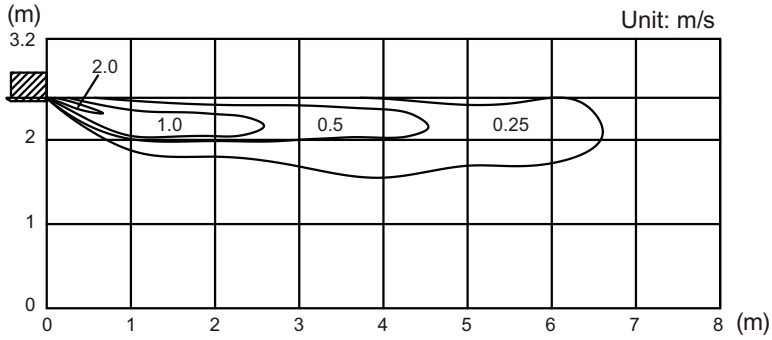

INDOOR UNITS

INDOOR UNITS

Measuring conditions	Fan speed	Operation mode
	HIGH	FAN

- **Comfort airflow operation: Heating**

Top view
Vertical airflow direction louver: Down

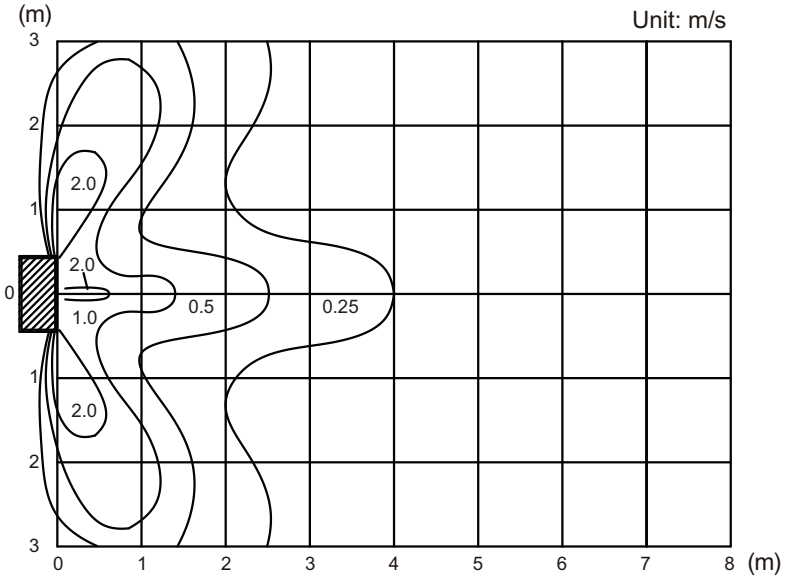

Side view
Vertical airflow direction louver: Down

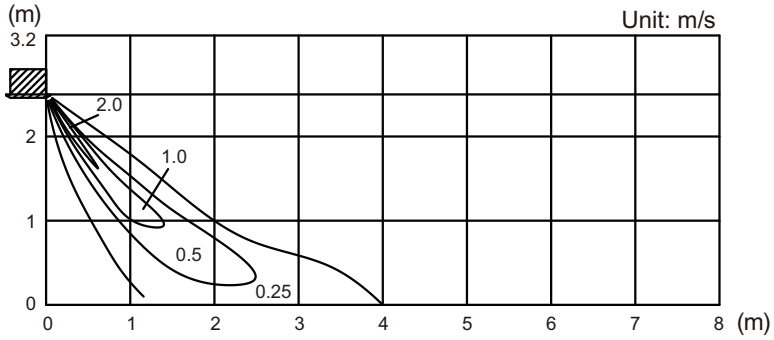

INDOOR UNITS

Measuring conditions	Fan speed	Operation mode
	HIGH	FAN

- **Horizontal airflow direction louver: Center**

Top view
Vertical airflow direction louver: Up

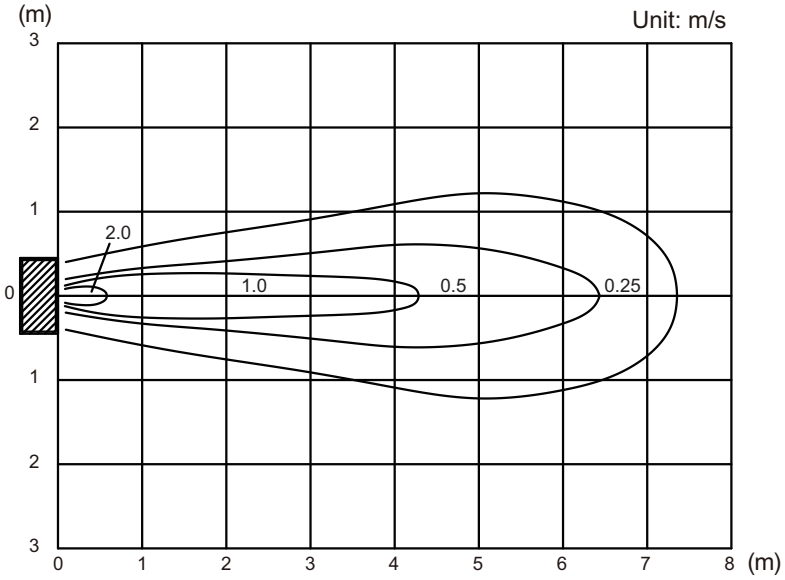

Side view
Vertical airflow direction louver: Up

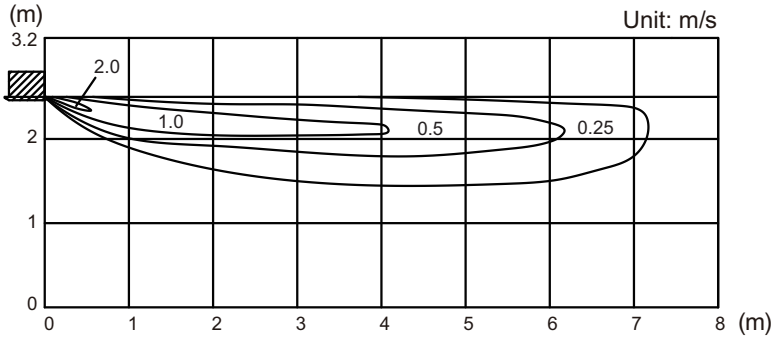

INDOOR UNITS

Measuring conditions	Fan speed	Operation mode
	HIGH	FAN

Top view
Vertical airflow direction louver: Down

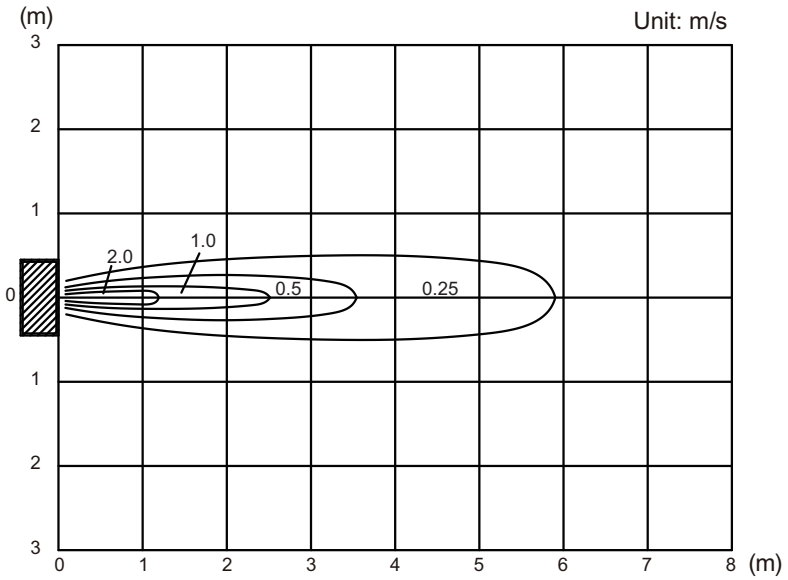

Side view
Vertical airflow direction louver: Down

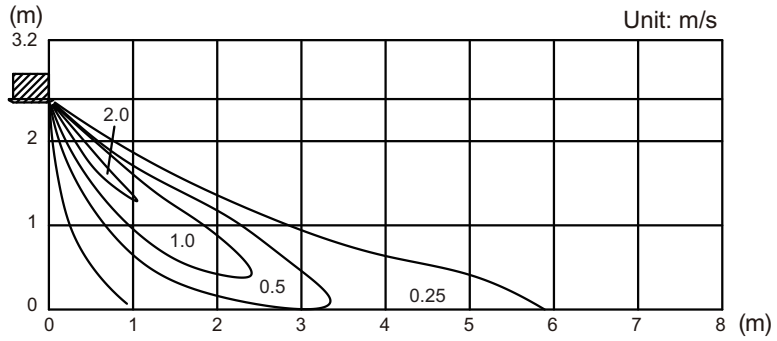

INDOOR UNITS

Measuring conditions	Fan speed	Operation mode
	HIGH	FAN

- **Horizontal airflow direction louver: Right**

Top view
Vertical airflow direction louver: Up

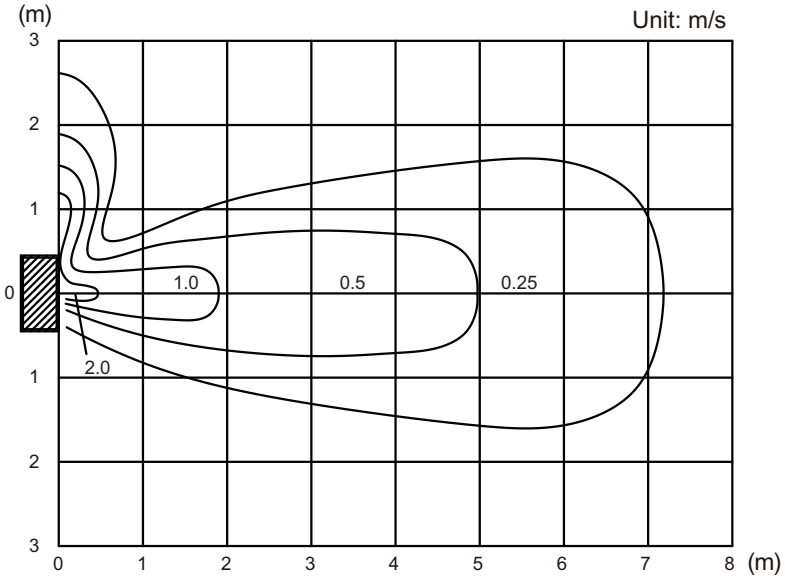

Side view
Vertical airflow direction louver: Up

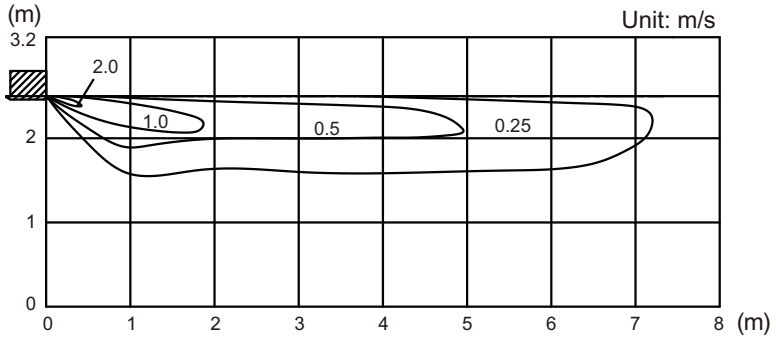

INDOOR UNITS

Measuring conditions	Fan speed	Operation mode
	HIGH	FAN

- **Horizontal airflow direction louver: Left**

Top view
Vertical airflow direction louver: Up

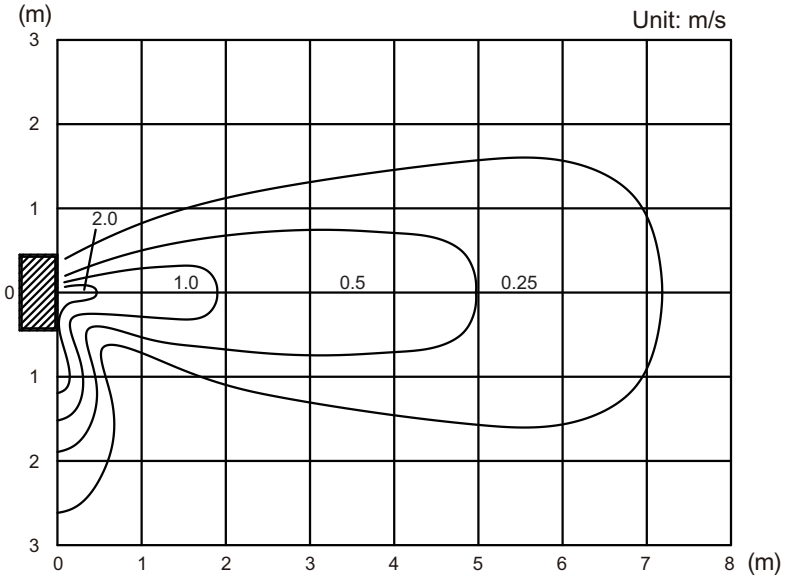

Side view
Vertical airflow direction louver: Up

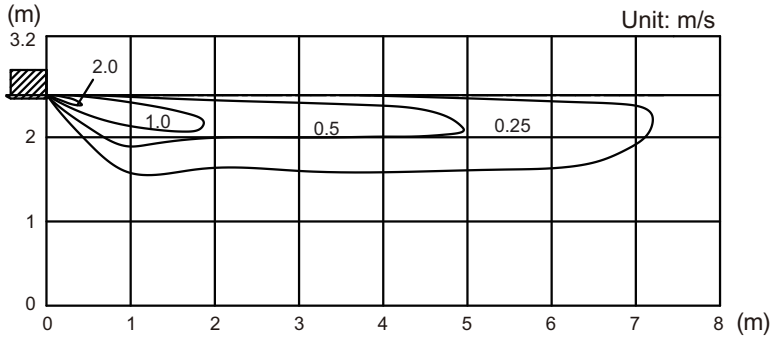

INDOOR UNITS

INDOOR UNITS

6-5. One way flow cassette type

■ Model: AUXV004GLEH

Measuring conditions	Fan speed	Operation mode
	HIGH	FAN

- **Air velocity distribution**

Top view
Vertical airflow direction louver: Position 1

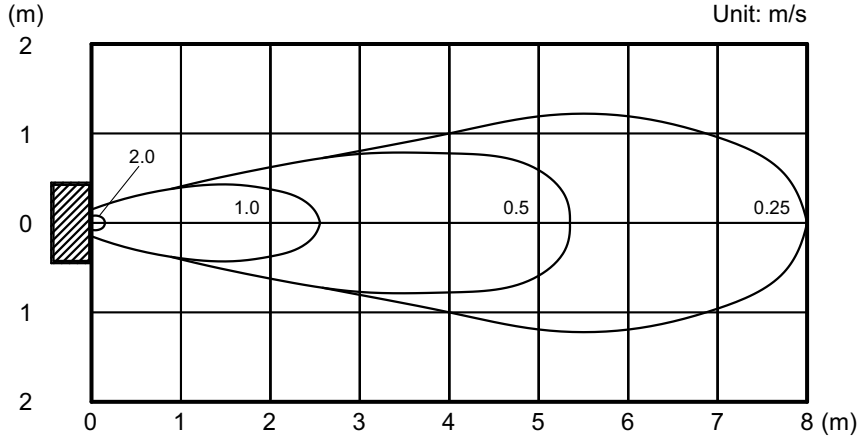

Side view
Vertical airflow direction louver: Position 1

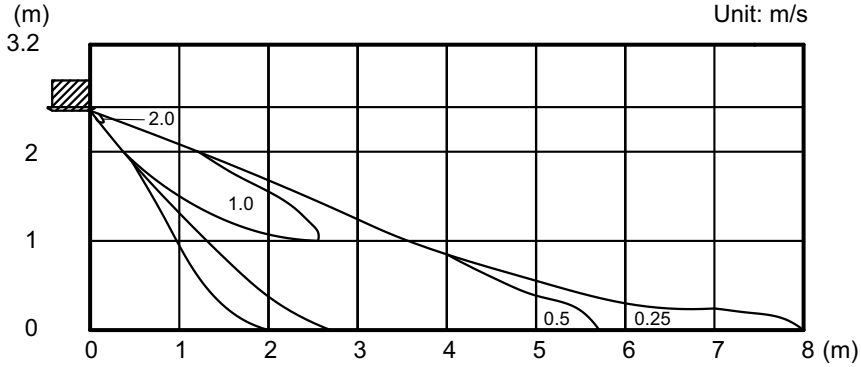

INDOOR UNITS

Measuring conditions	Fan speed	Operation mode
NOTE: Reference data	HIGH	FAN

- **Air velocity distribution**

Side view
Vertical airflow direction louver: Position 5

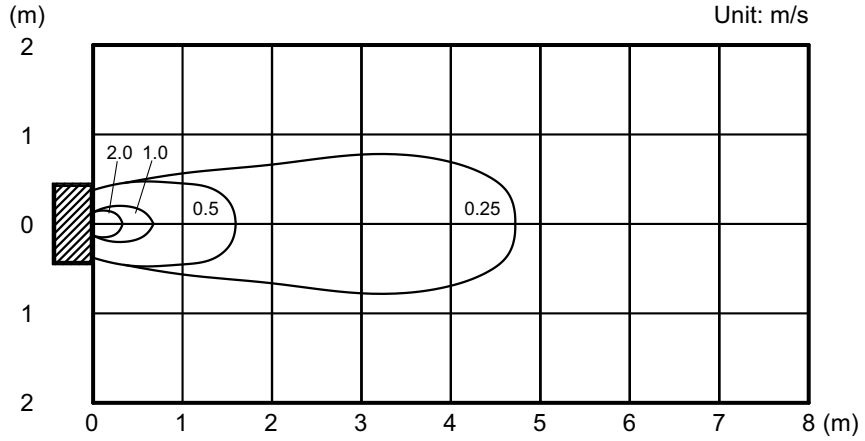

Side view
Vertical airflow direction louver: Position 5

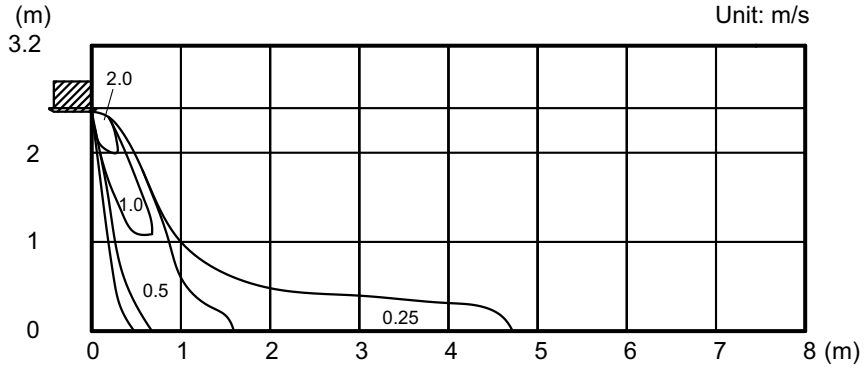

INDOOR UNITS

■ Models: AUXV007GLEH and AUXV009GLEH

Measuring conditions	Fan speed	Operation mode
	HIGH	FAN

- **Air velocity distribution**

Top view
Vertical airflow direction louver: Position 1

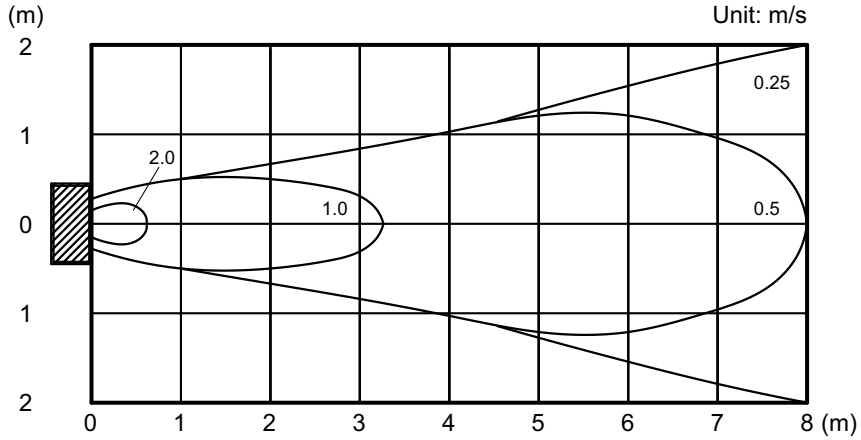

Side view
Vertical airflow direction louver: Position 1

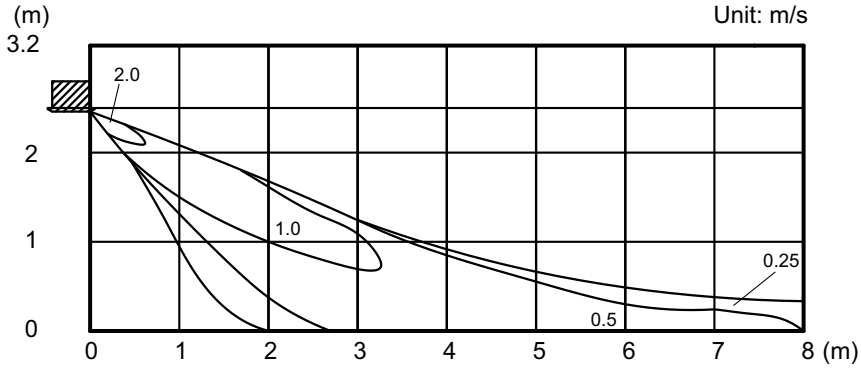

INDOOR UNITS

INDOOR UNITS

Measuring conditions	Fan speed	Operation mode
NOTE: Reference data	HIGH	FAN

- **Air velocity distribution**

Side view
Vertical airflow direction louver: Position 5

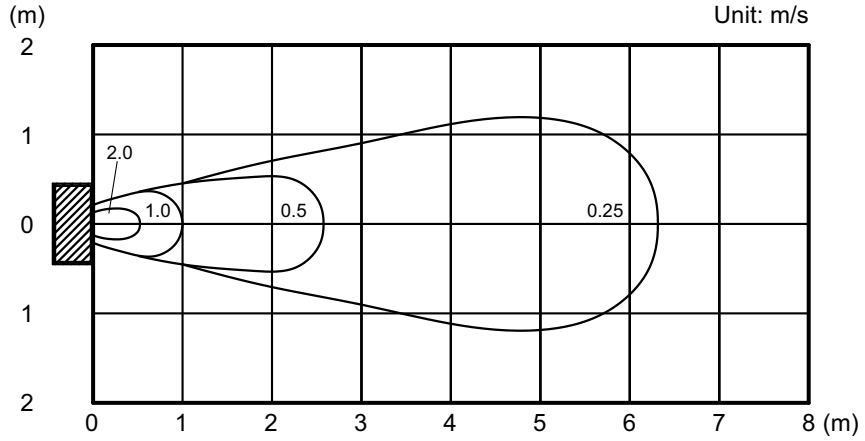

Side view
Vertical airflow direction louver: Position 5

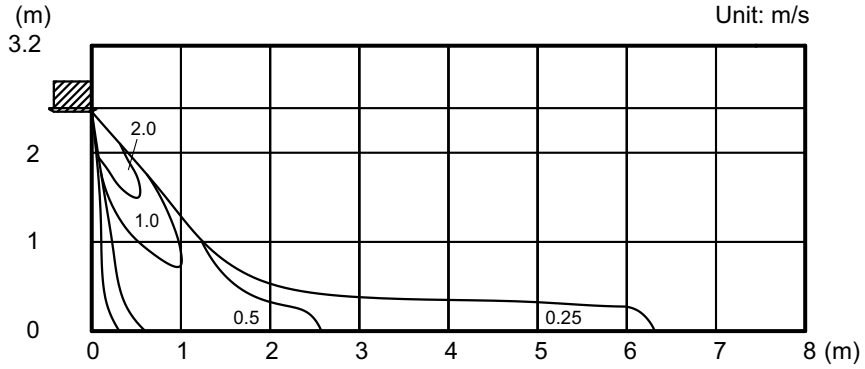

INDOOR UNITS

■ Model: AUXV012GLEH

Measuring conditions	Fan speed	Operation mode
	HIGH	FAN

- **Air velocity distribution**

Top view
Vertical airflow direction louver: Position 1

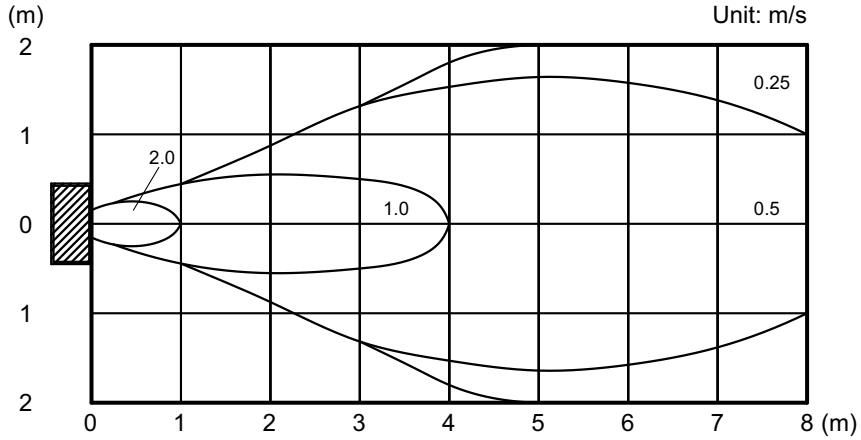

Side view
Vertical airflow direction louver: Position 1

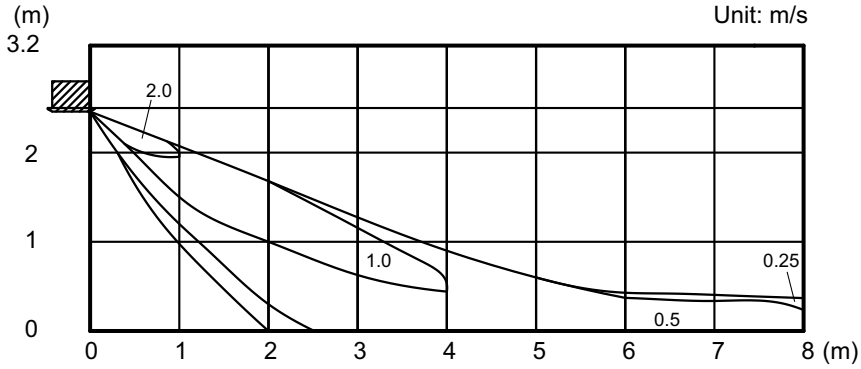

INDOOR UNITS

INDOOR UNITS

Measuring conditions	Fan speed	Operation mode
NOTE: Reference data	HIGH	FAN

- **Air velocity distribution**

Side view
Vertical airflow direction louver: Position 5

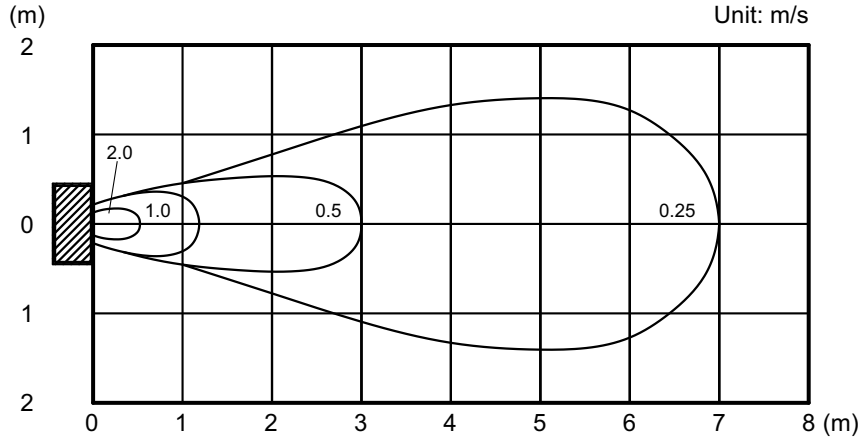

Side view
Vertical airflow direction louver: Position 5

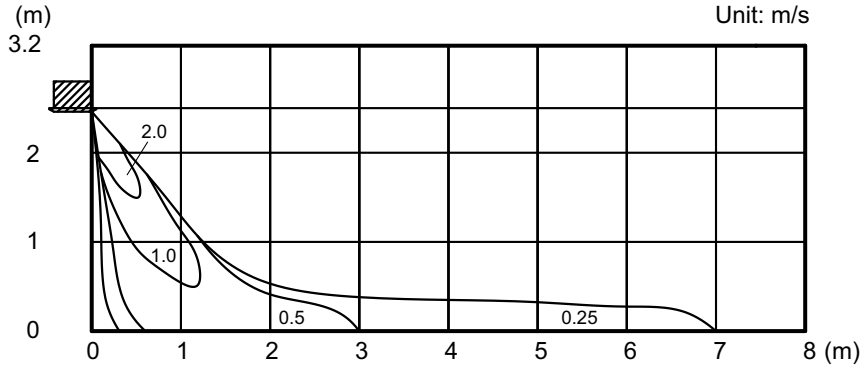

INDOOR UNITS

■ Model: AUXV014GLEH

Measuring conditions	Fan speed	Operation mode
	HIGH	FAN

- **Air velocity distribution**

Top view
Vertical airflow direction louver: Position 1

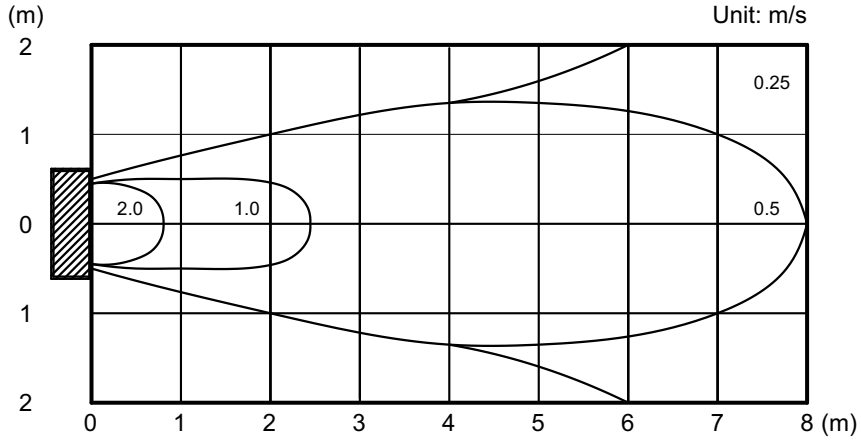

Side view
Vertical airflow direction louver: Position 1

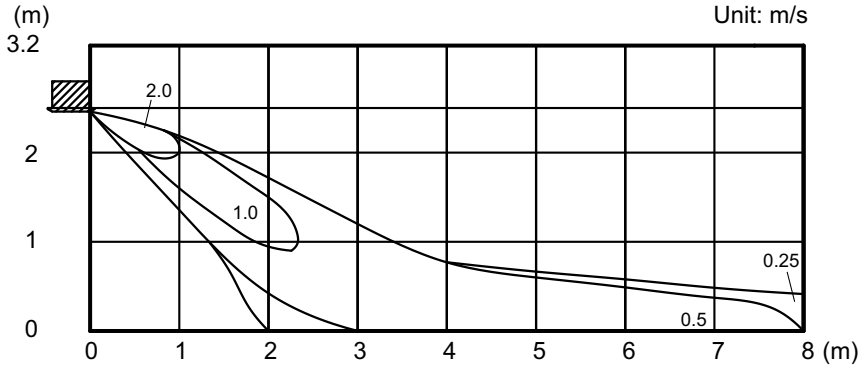

INDOOR UNITS

INDOOR UNITS

Measuring conditions	Fan speed	Operation mode
NOTE: Reference data	HIGH	FAN

- **Air velocity distribution**

Side view
Vertical airflow direction louver: Position 5

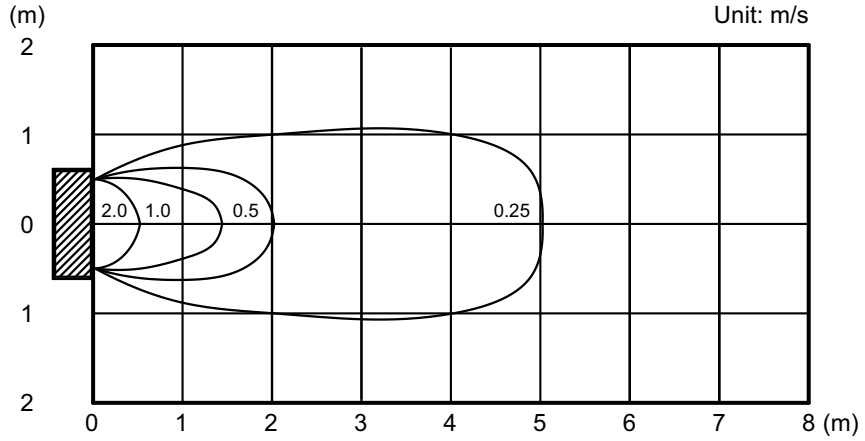

Side view
Vertical airflow direction louver: Position 5

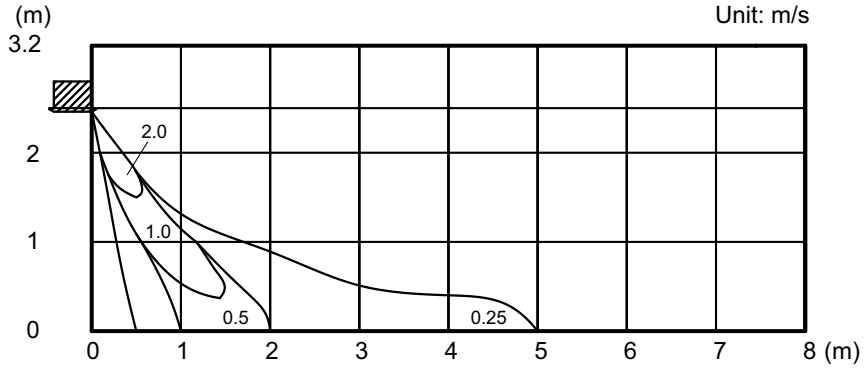

INDOOR UNITS

■ Model: AUXV018GLEH

Measuring conditions	Fan speed	Operation mode
	HIGH	FAN

- **Air velocity distribution**

Top view
Vertical airflow direction louver: Position 1

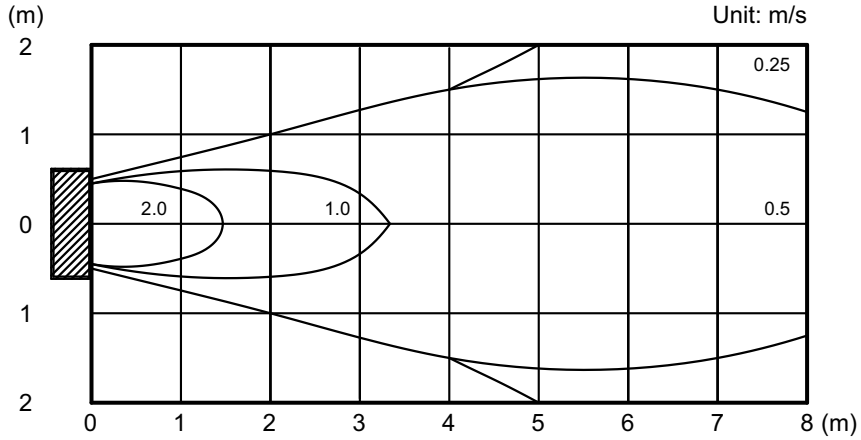

Side view
Vertical airflow direction louver: Position 1

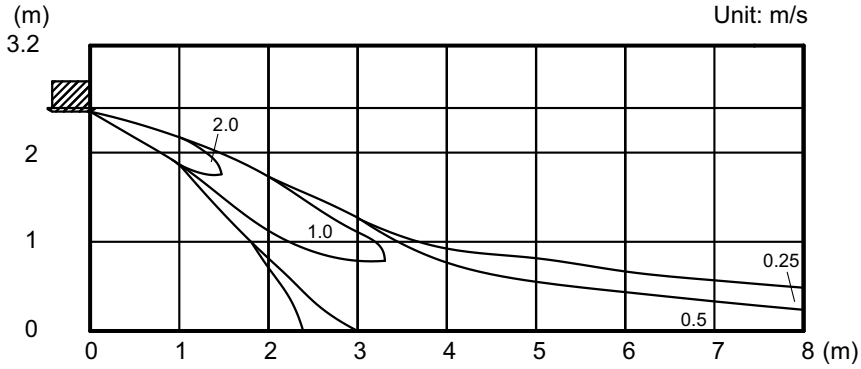

INDOOR UNITS

INDOOR UNITS

Measuring conditions	Fan speed	Operation mode
NOTE: Reference data	HIGH	FAN

- **Air velocity distribution**

Side view
Vertical airflow direction louver: Position 5

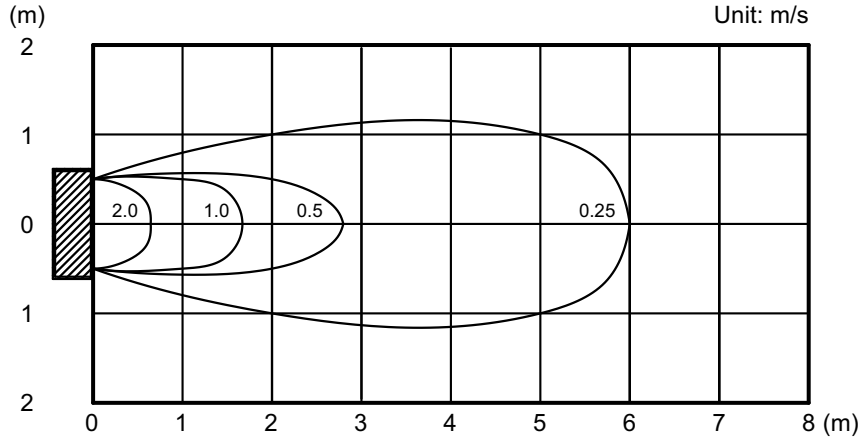

Side view
Vertical airflow direction louver: Position 5

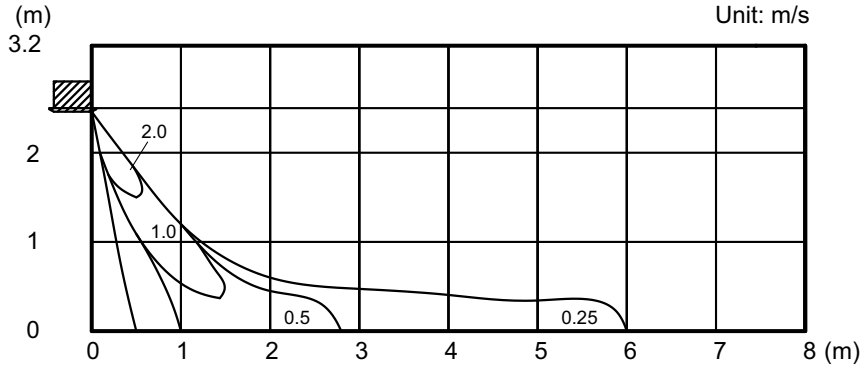

INDOOR UNITS

■ Model: AUXV024GLEH

Measuring conditions	Fan speed	Operation mode
	HIGH	FAN

- **Air velocity distribution**

Top view
Vertical airflow direction louver: Position 1

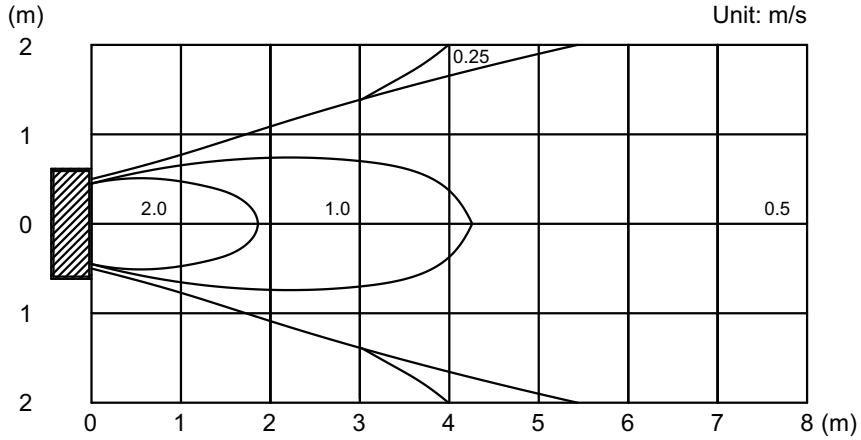

Side view
Vertical airflow direction louver: Position 1

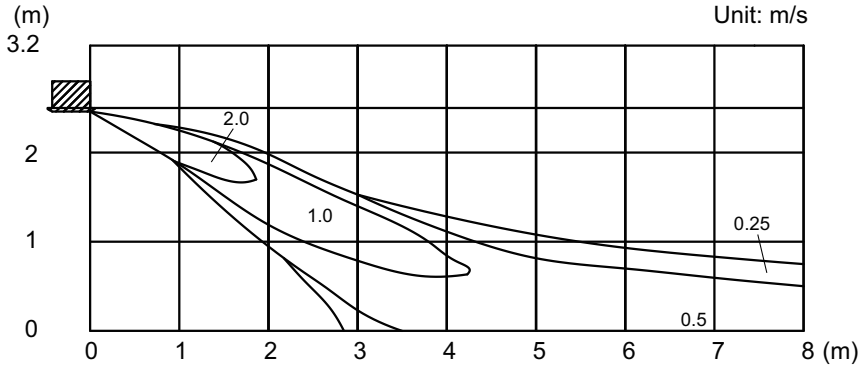

INDOOR UNITS

INDOOR UNITS

Measuring conditions	Fan speed	Operation mode
NOTE: Reference data	HIGH	FAN

- **Air velocity distribution**

Side view
Vertical airflow direction louver: Position 5

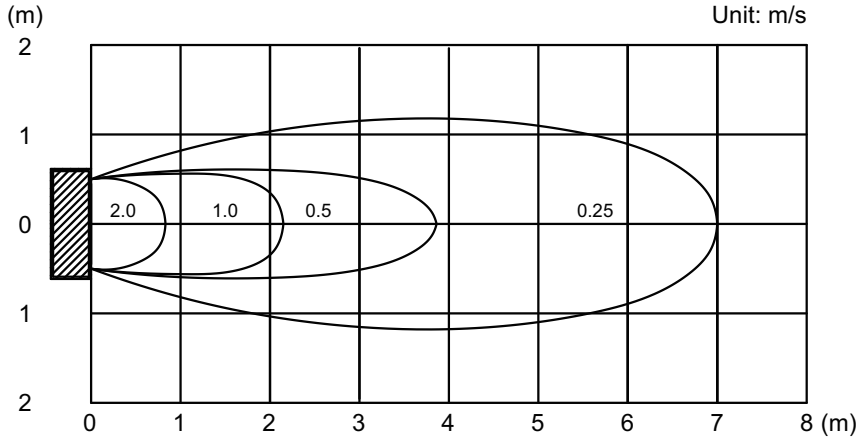

Side view
Vertical airflow direction louver: Position 5

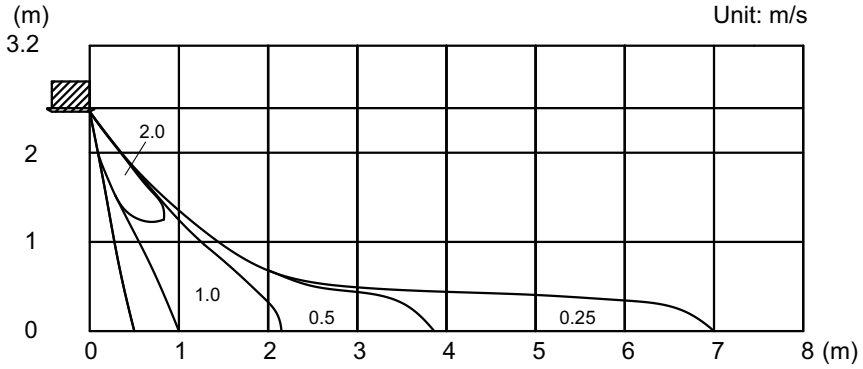

INDOOR UNITS

6-6. Low static pressure duct (Mini duct) type

NOTE: This data is measured with Auto louver grille kit (option).

■ Models: ARXK004GLGH, ARXK007GLGH, and ARXK009GLGH (with UTD-GXTA-W)

Measuring conditions	Fan speed	Operation mode
	HIGH	FAN

- **Air velocity distribution**

Top view
Vertical airflow direction louver: Up
Horizontal airflow direction louver: Center

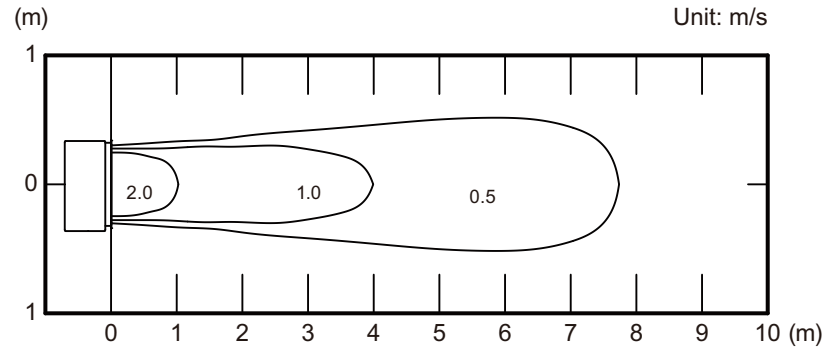

Top view
Vertical airflow direction louver: Up
Horizontal airflow direction louver: Left & Right

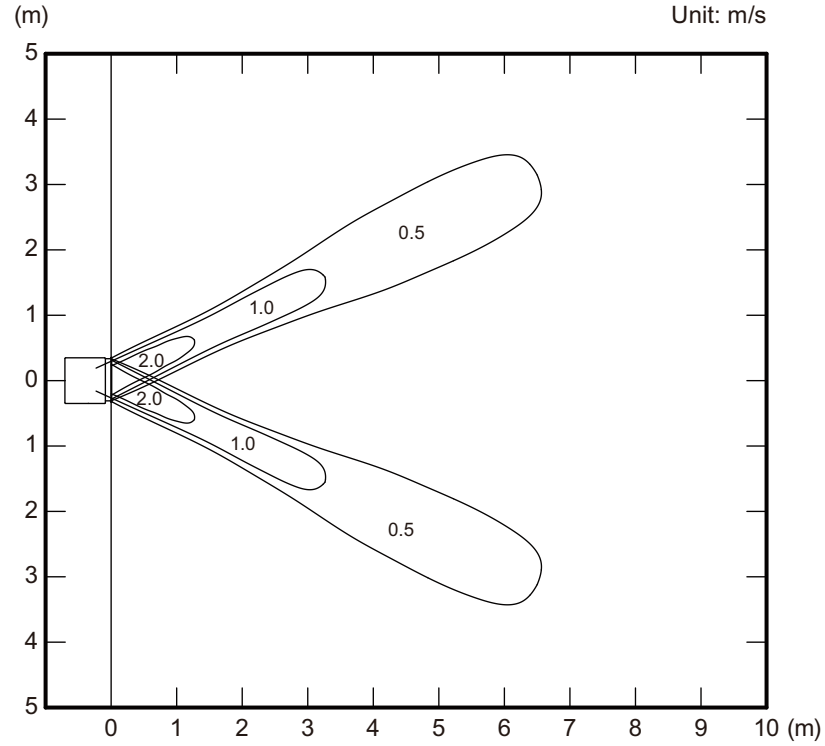

Side view
Vertical airflow direction louver: Up
Horizontal airflow direction louver: Center

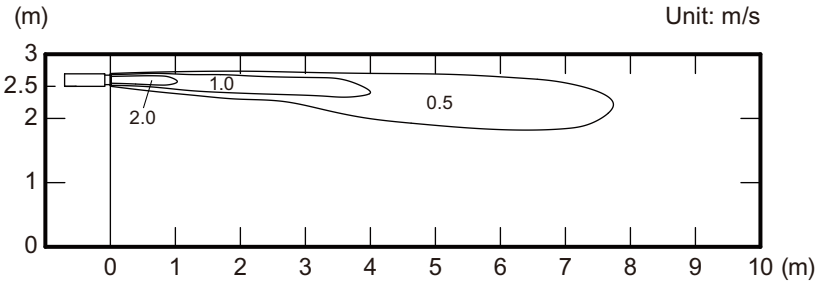

INDOOR UNITS

INDOOR UNITS

Measuring conditions	Fan speed	Operation mode
NOTE: Reference data	HIGH	HEAT

- **Air velocity distribution**

Side view
Vertical airflow direction louver: Down
Horizontal airflow direction louver: Center

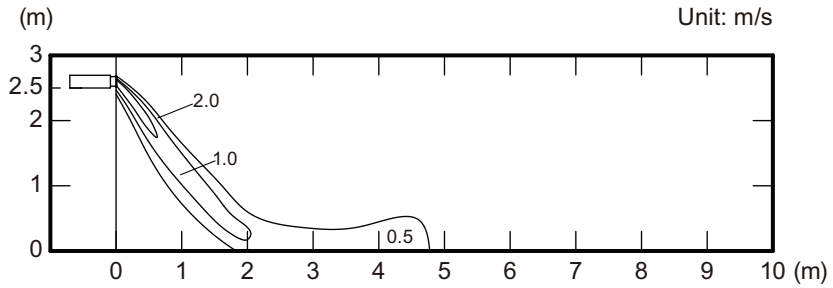

- **Air temperature distribution**

Side view
Vertical airflow direction louver: Down
Horizontal airflow direction louver: Center

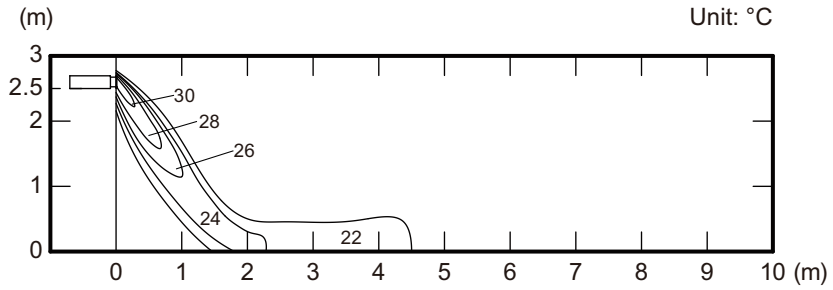

INDOOR UNITS

INDOOR UNITS

■ Model: ARXK012GLGH (with UTD-GXTA-W)

Measuring conditions	Fan speed	Operation mode
	HIGH	FAN

• Air velocity distribution

Top view
Vertical airflow direction louver: Up
Horizontal airflow direction louver: Center

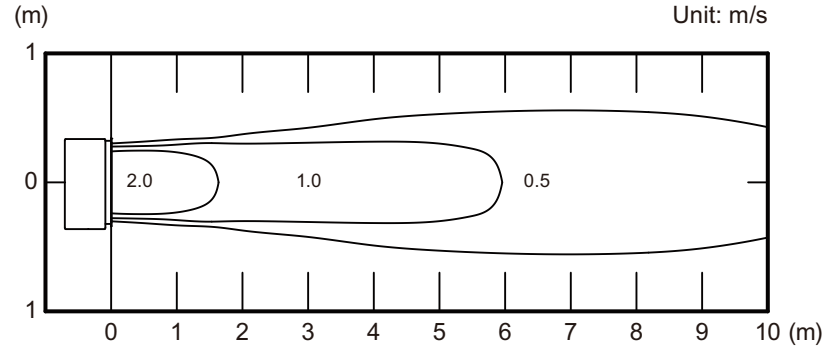

Top view
Vertical airflow direction louver: Up
Horizontal airflow direction louver: Left & Right

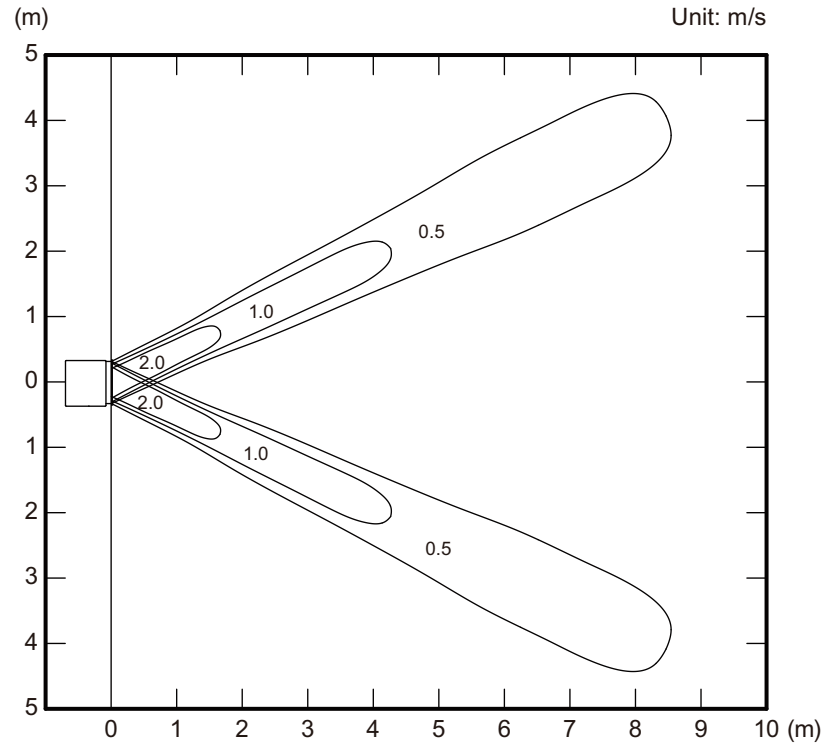

Side view
Vertical airflow direction louver: Up
Horizontal airflow direction louver: Center

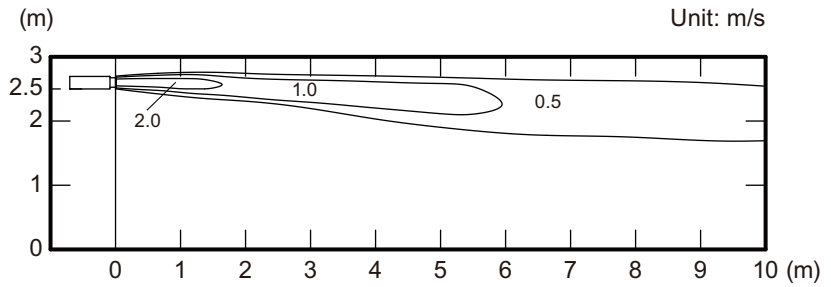

INDOOR UNITS

INDOOR UNITS

Measuring conditions	Fan speed	Operation mode
NOTE: Reference data	HIGH	HEAT

- **Air velocity distribution**

Side view
Vertical airflow direction louver: Down
Horizontal airflow direction louver: Center

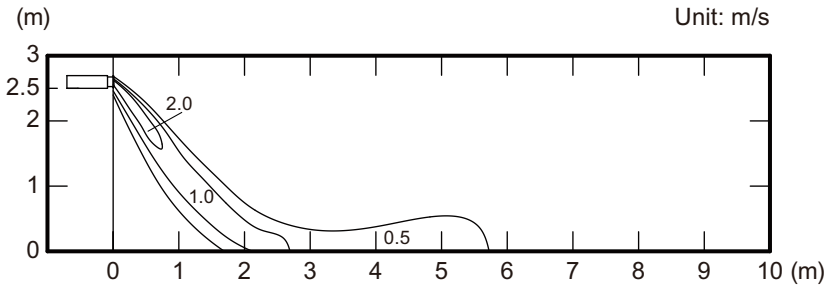

- **Air temperature distribution**

Side view
Vertical airflow direction louver: Down
Horizontal airflow direction louver: Center

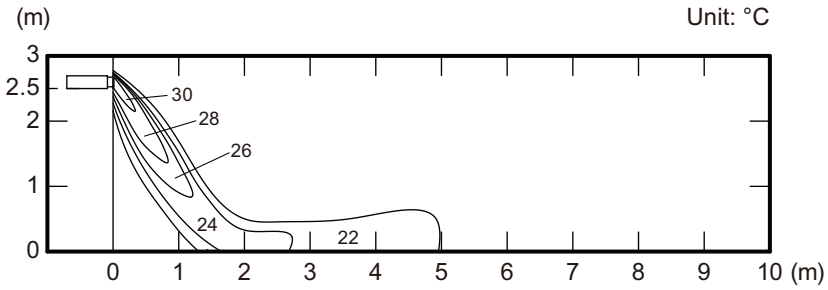

INDOOR UNITS

INDOOR UNITS

■ Model: ARXK014GLGH (with UTD-GXTA-W)

Measuring conditions	Fan speed	Operation mode
	HIGH	FAN

- **Air velocity distribution**

Top view
Vertical airflow direction louver: Up
Horizontal airflow direction louver: Center

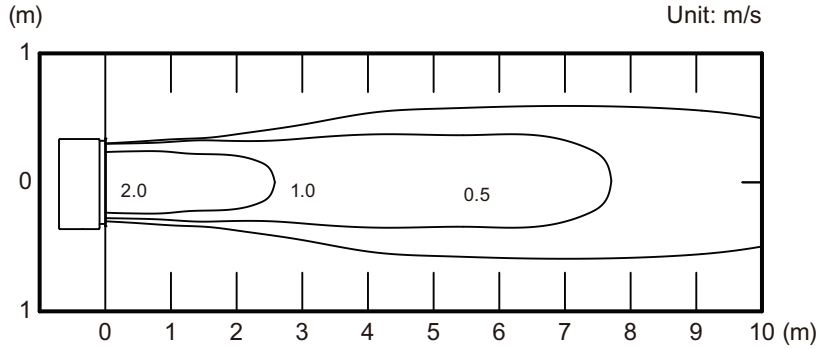

Top view
Vertical airflow direction louver: Up
Horizontal airflow direction louver: Left & Right

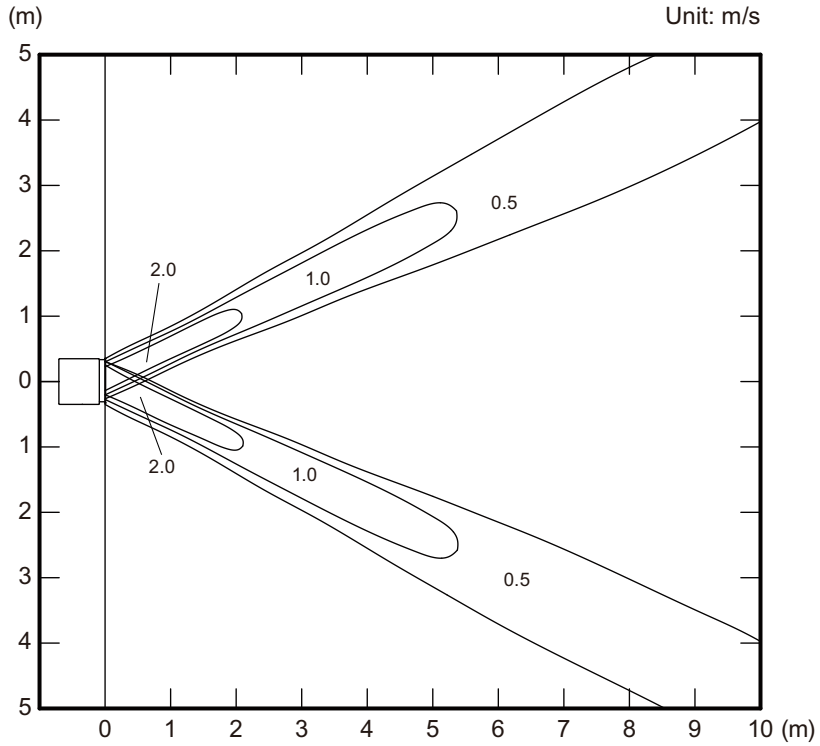

Side view
Vertical airflow direction louver: Up
Horizontal airflow direction louver: Center

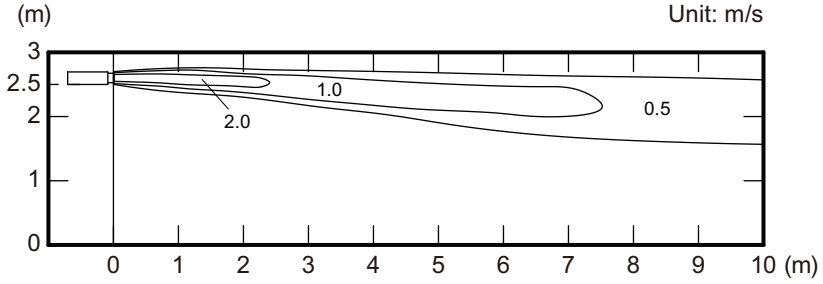

INDOOR UNITS

INDOOR UNITS

Measuring conditions	Fan speed	Operation mode
NOTE: Reference data	HIGH	HEAT

- **Air velocity distribution**

Side view
Vertical airflow direction louver: Down
Horizontal airflow direction louver: Center

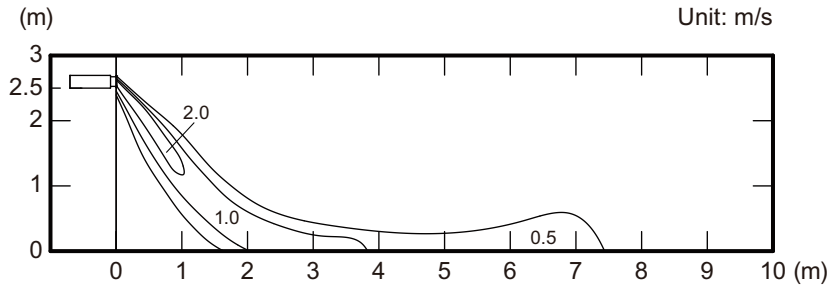

- **Air temperature distribution**

Side view
Vertical airflow direction louver: Down
Horizontal airflow direction louver: Center

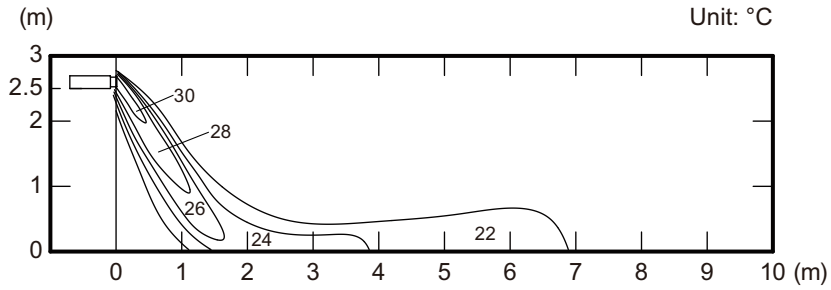

INDOOR UNITS

INDOOR UNITS

■ Model: ARXK018GLGH (with UTD-GXTB-W)

Measuring conditions	Fan speed	Operation mode
	HIGH	FAN

• Air velocity distribution

Top view
Vertical airflow direction louver: Up
Horizontal airflow direction louver: Center

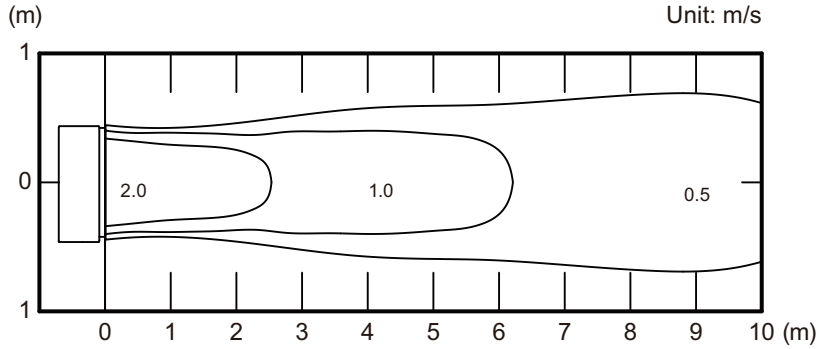

Top view
Vertical airflow direction louver: Up
Horizontal airflow direction louver: Left & Right

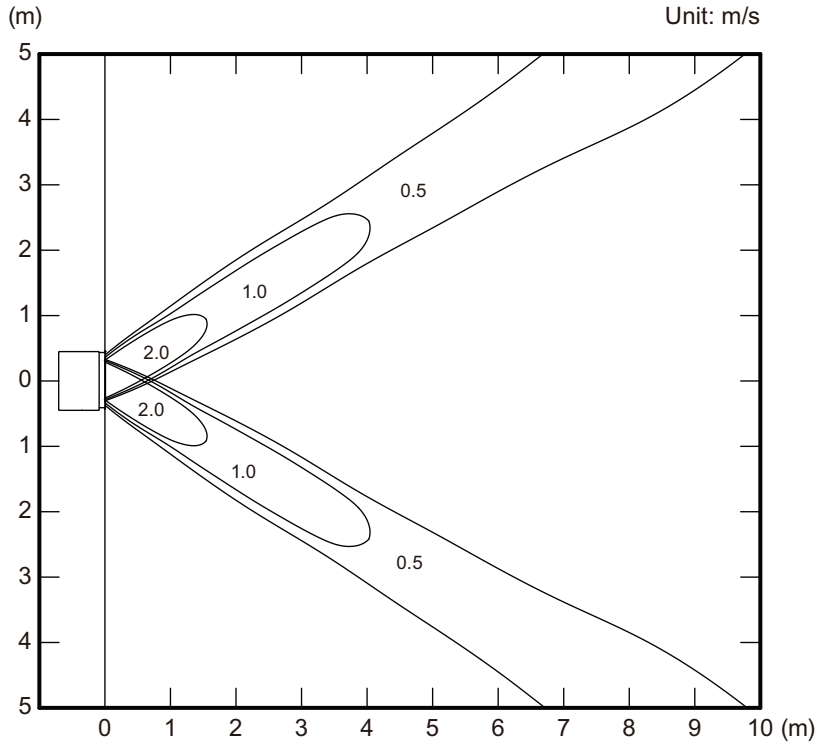

Side view
Vertical airflow direction louver: Up
Horizontal airflow direction louver: Center

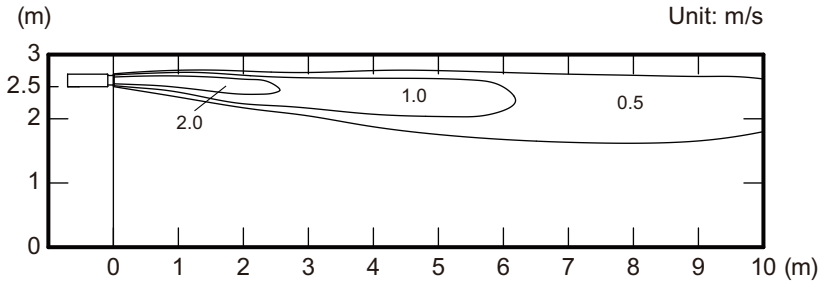

INDOOR UNITS

INDOOR UNITS

Measuring conditions	Fan speed	Operation mode
NOTE: Reference data	HIGH	HEAT

- **Air velocity distribution**

Side view
Vertical airflow direction louver: Down
Horizontal airflow direction louver: Center

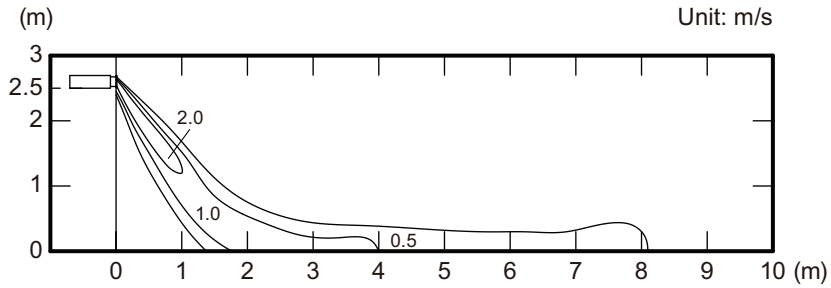

- **Air temperature distribution**

Side view
Vertical airflow direction louver: Down
Horizontal airflow direction louver: Center

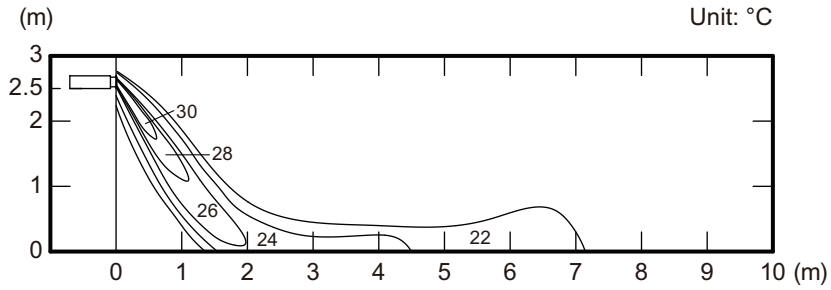

INDOOR UNITS

INDOOR UNITS

■ Model: ARXK024GLGH (with UTD-GXTC-W)

Measuring conditions	Fan speed	Operation mode
	HIGH	FAN

• Air velocity distribution

Top view
Vertical airflow direction louver: Up
Horizontal airflow direction louver: Center

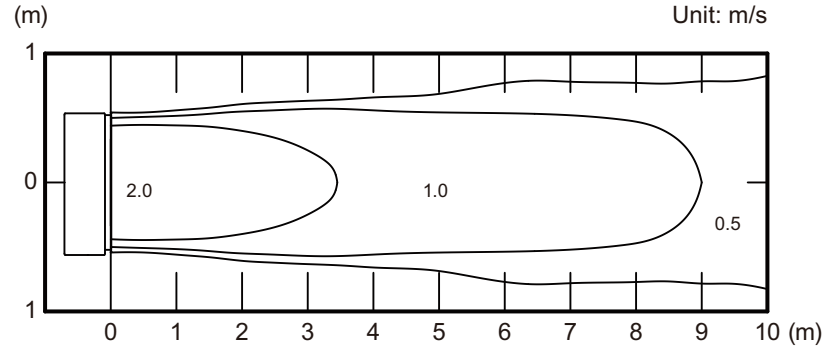

Top view
Vertical airflow direction louver: Up
Horizontal airflow direction louver: Left & Right

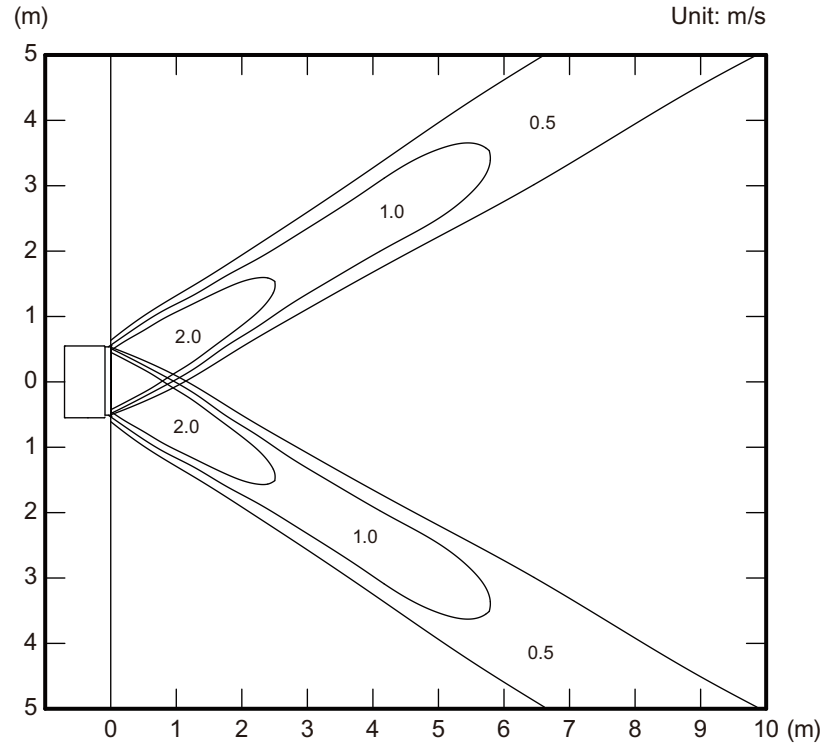

Side view
Vertical airflow direction louver: Up
Horizontal airflow direction louver: Center

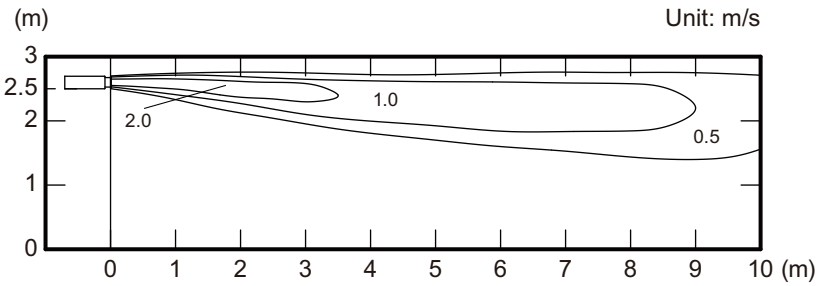

INDOOR UNITS

INDOOR UNITS

Measuring conditions	Fan speed	Operation mode
NOTE: Reference data	HIGH	HEAT

- **Air velocity distribution**

Side view
Vertical airflow direction louver: Down
Horizontal airflow direction louver: Center

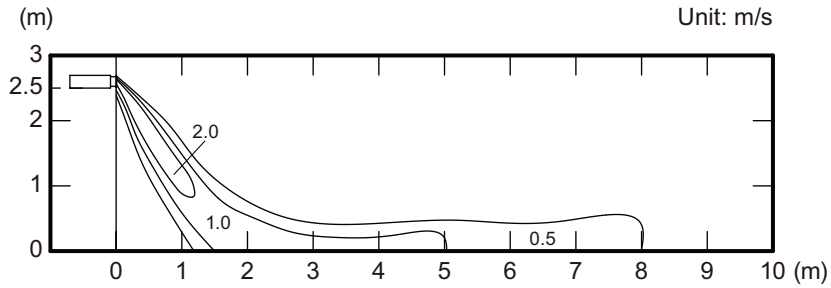

- **Air temperature distribution**

Side view
Vertical airflow direction louver: Down
Horizontal airflow direction louver: Center

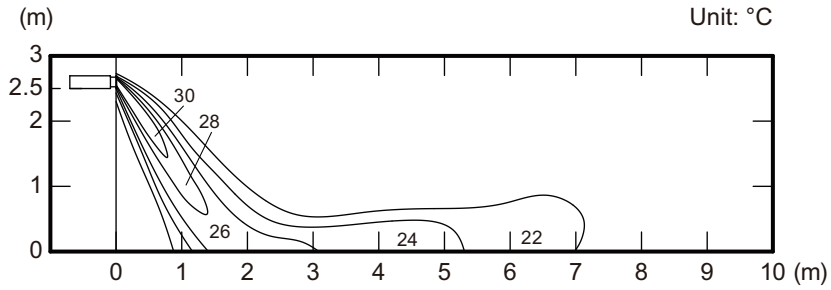

INDOOR UNITS

INDOOR UNITS

6-7. Low static pressure duct (Slim duct)/Slim concealed floor type

NOTE: This data is measured with Auto louver grille kit (option).

■ Model: ARXD007GLEH (with UTD-GXSA-W)

Measuring conditions	Fan speed	Operation mode
	HIGH	FAN

- **Air velocity distribution**

Top view
Vertical airflow direction louver: Up
Horizontal airflow direction louver: Center

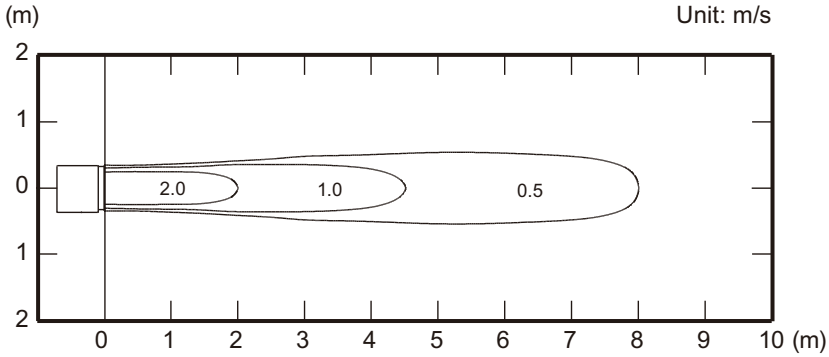

Top view
Vertical airflow direction louver: Up
Horizontal airflow direction louver: Left & Right

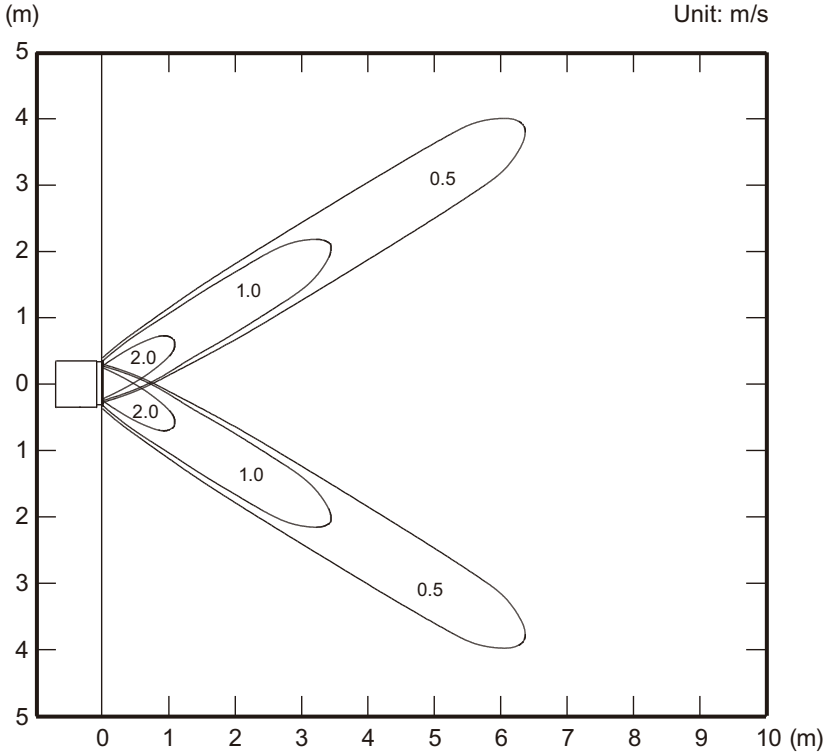

Side view
Vertical airflow direction louver: Up
Horizontal airflow direction louver: Center

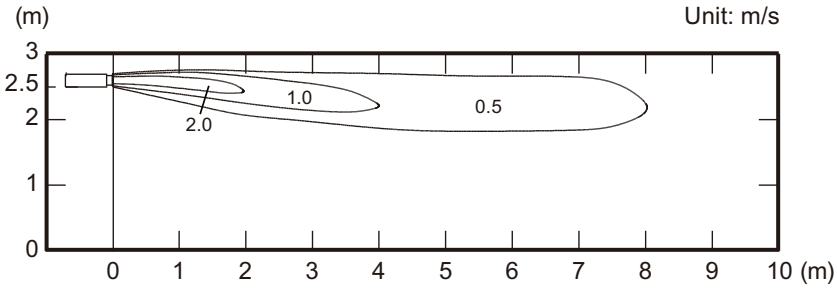

Measuring conditions	Fan speed	Operation mode
NOTE: Reference data	HIGH	HEAT

- **Air velocity distribution**

Side view
Vertical airflow direction louver: Down
Horizontal airflow direction louver: Center

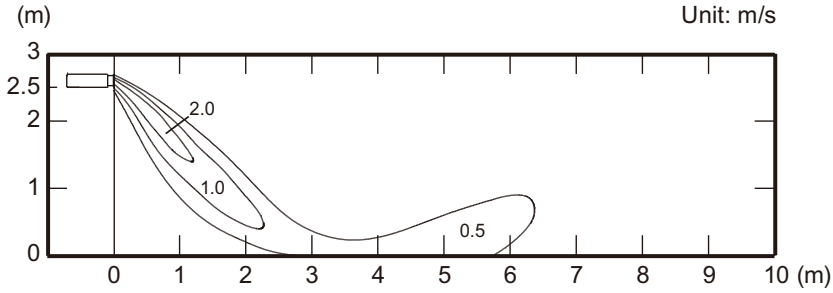

- **Air temperature distribution**

Side view
Vertical airflow direction louver: Down
Horizontal airflow direction louver: Center

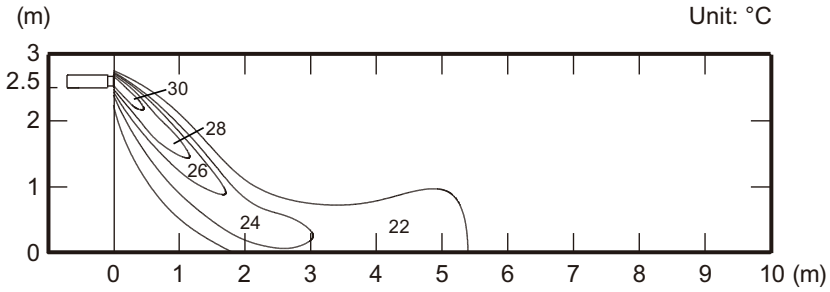

INDOOR UNITS

■ Model: ARXD009GLEH (with UTD-GXSA-W)

Measuring conditions	Fan speed	Operation mode
	HIGH	FAN

- **Air velocity distribution**

Top view
Vertical airflow direction louver: Up
Horizontal airflow direction louver: Center

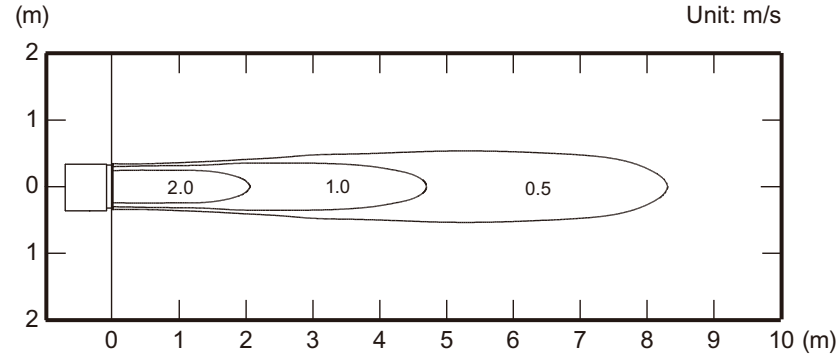

Top view
Vertical airflow direction louver: Up
Horizontal airflow direction louver: Left & Right

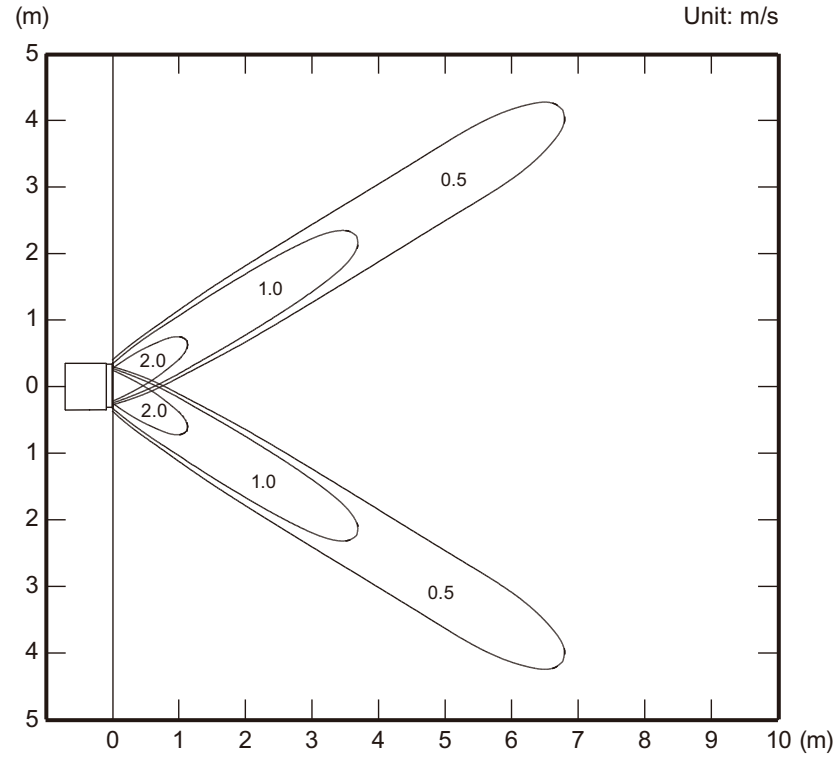

Side view
Vertical airflow direction louver: Up
Horizontal airflow direction louver: Center

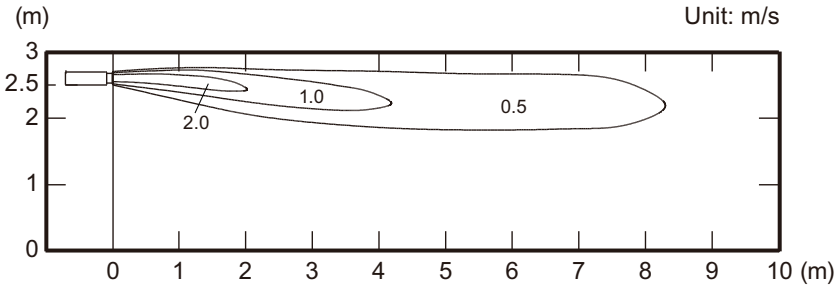

INDOOR UNITS

INDOOR UNITS

Measuring conditions	Fan speed	Operation mode
NOTE: Reference data	HIGH	HEAT

- **Air velocity distribution**

Side view
Vertical airflow direction louver: Down
Horizontal airflow direction louver: Center

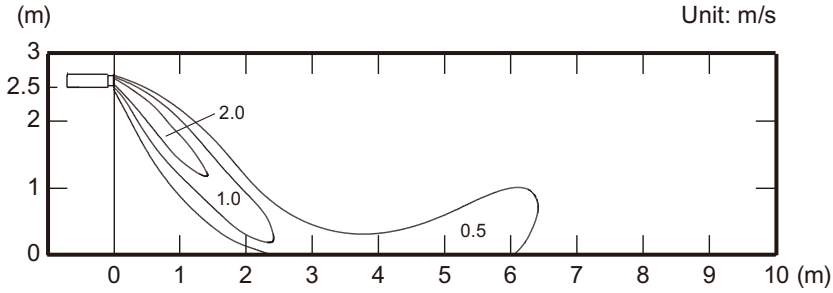

- **Air temperature distribution**

Side view
Vertical airflow direction louver: Down
Horizontal airflow direction louver: Center

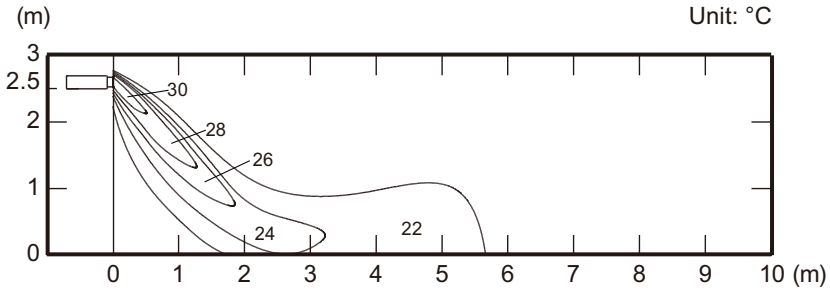

INDOOR UNITS

■ Model: ARXD012GLEH (with UTD-GXSA-W)

Measuring conditions	Fan speed	Operation mode
	HIGH	FAN

- **Air velocity distribution**

Top view
Vertical airflow direction louver: Up
Horizontal airflow direction louver: Center

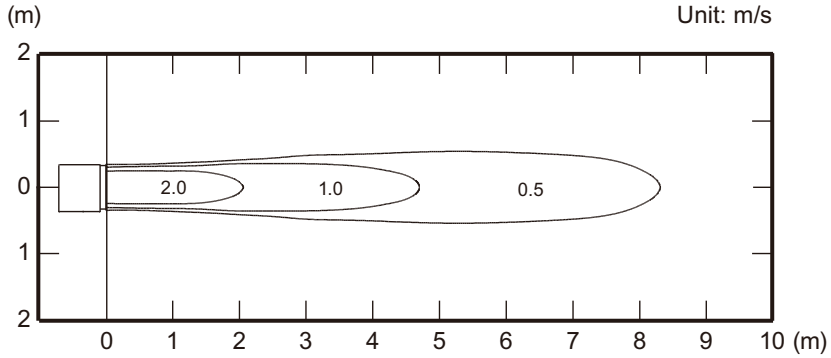

Top view
Vertical airflow direction louver: Up
Horizontal airflow direction louver: Left & Right

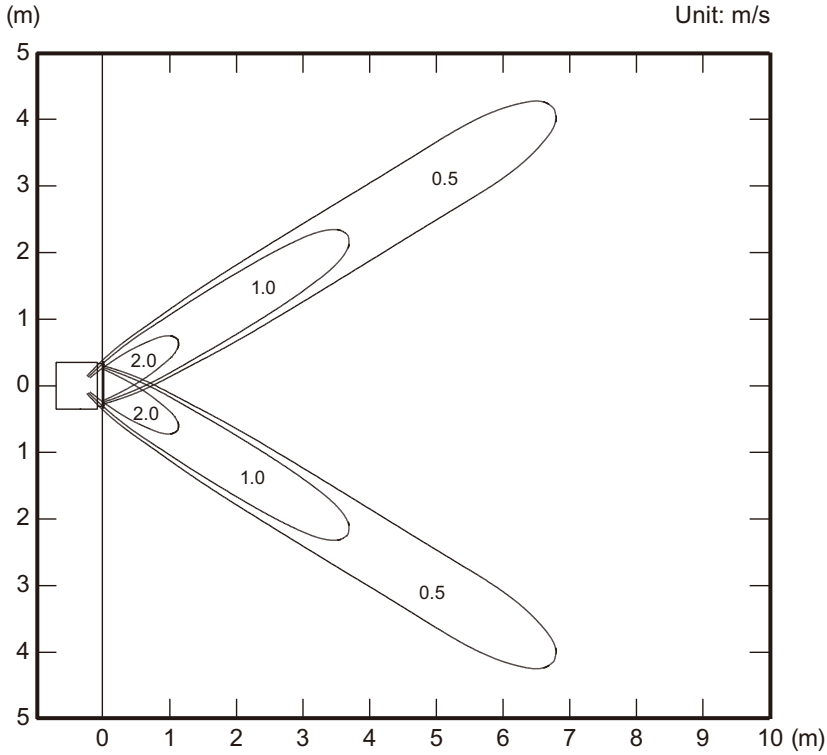

Side view
Vertical airflow direction louver: Up
Horizontal airflow direction louver: Center

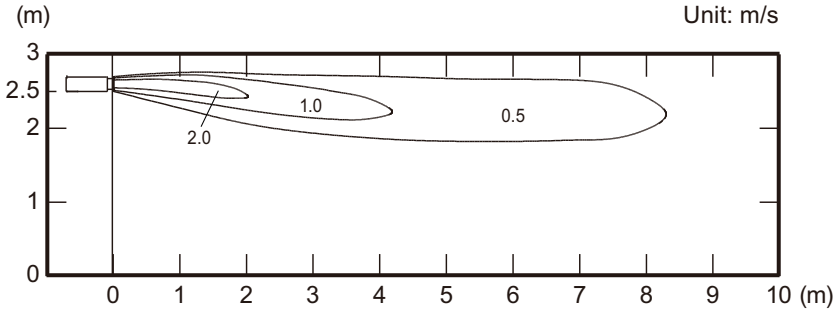

INDOOR UNITS

INDOOR UNITS

Measuring conditions	Fan speed	Operation mode
NOTE: Reference data	HIGH	HEAT

- **Air velocity distribution**

Side view
Vertical airflow direction louver: Down
Horizontal airflow direction louver: Center

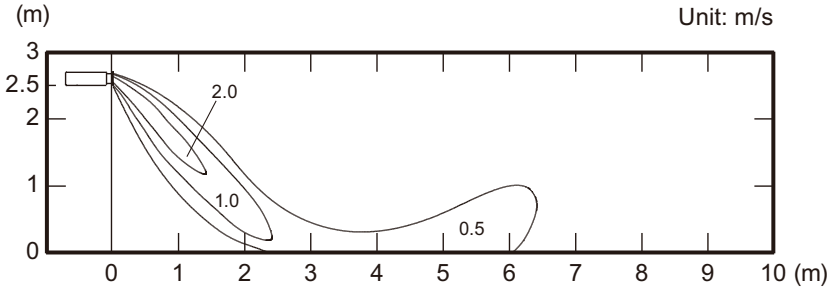

- **Air temperature distribution**

Side view
Vertical airflow direction louver: Down
Horizontal airflow direction louver: Center

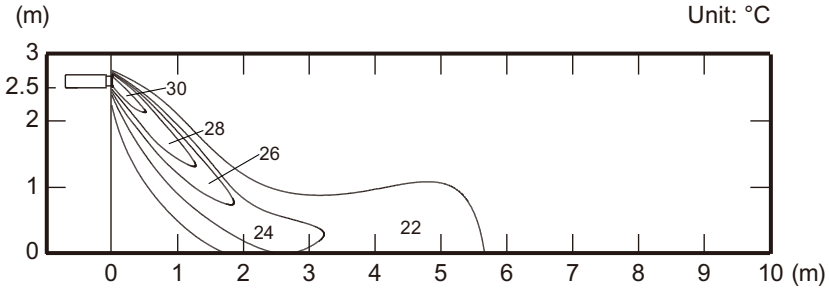

INDOOR UNITS

INDOOR UNITS

■ Model: ARXD014GLEH (with UTD-GXSA-W)

Measuring conditions	Fan speed	Operation mode
	HIGH	FAN

- **Air velocity distribution**

Top view
Vertical airflow direction louver: Up
Horizontal airflow direction louver: Center

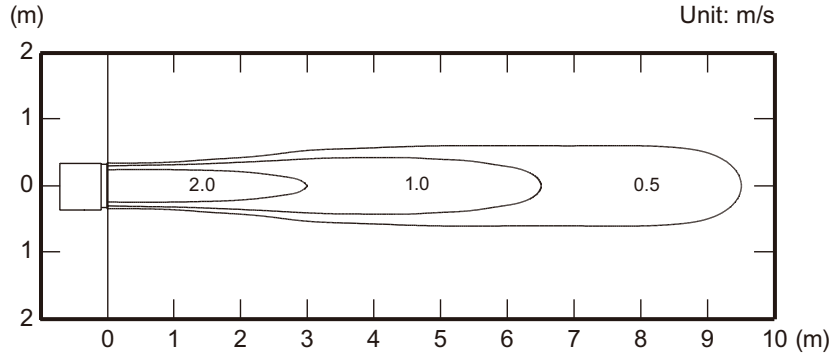

Top view
Vertical airflow direction louver: Up
Horizontal airflow direction louver: Left & Right

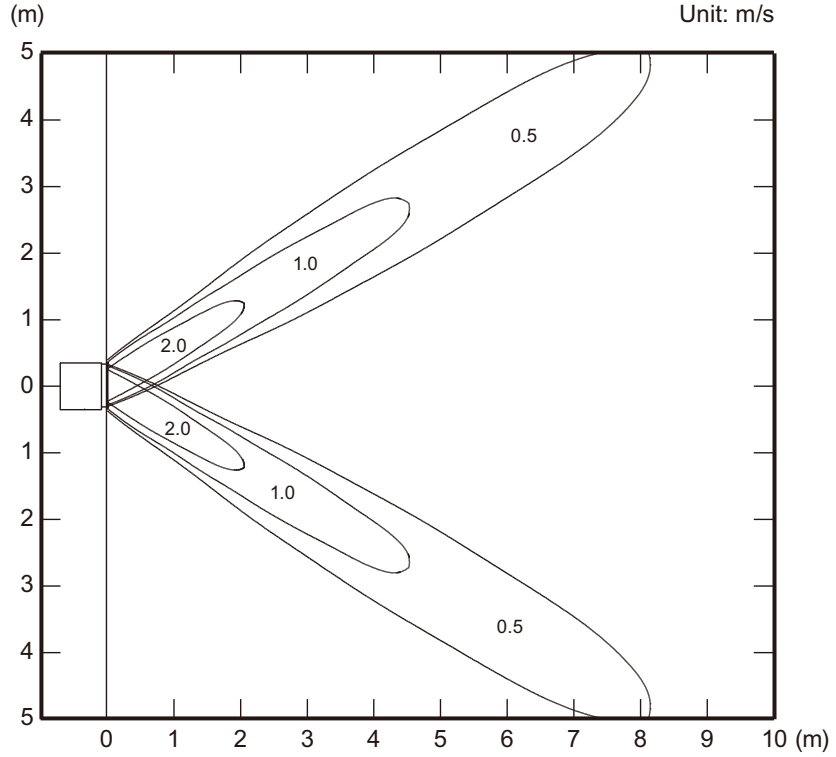

Side view
Vertical airflow direction louver: Up
Horizontal airflow direction louver: Center

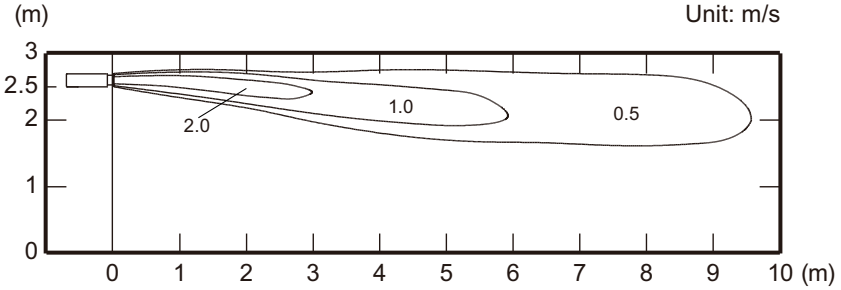

INDOOR UNITS

INDOOR UNITS

Measuring conditions	Fan speed	Operation mode
NOTE: Reference data	HIGH	HEAT

- **Air velocity distribution**

Side view
Vertical airflow direction louver: Down
Horizontal airflow direction louver: Center

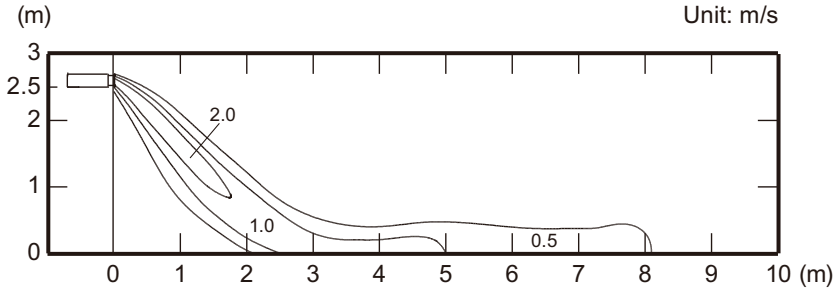

- **Air temperature distribution**

Side view
Vertical airflow direction louver: Down
Horizontal airflow direction louver: Center

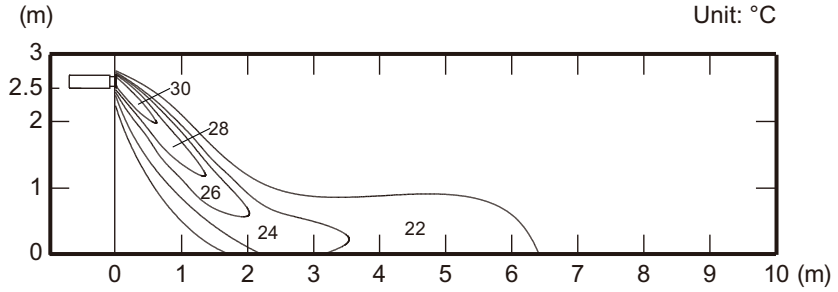

INDOOR UNITS

INDOOR UNITS

■ Model: ARXD018GLEH (with UTD-GXSB-W)

Measuring conditions	Fan speed	Operation mode
	HIGH	FAN

- **Air velocity distribution**

Top view
Vertical airflow direction louver: Up
Horizontal airflow direction louver: Center

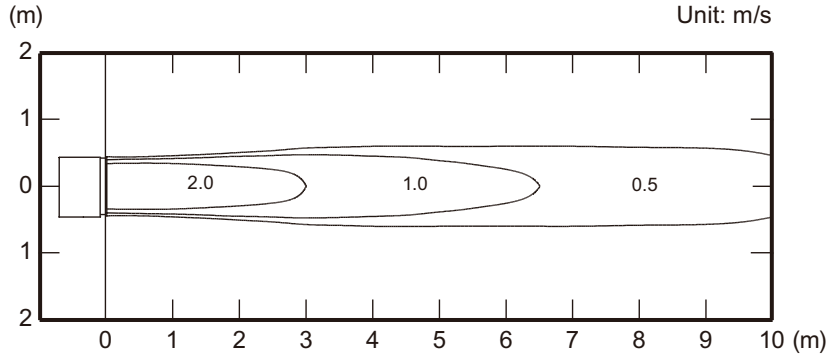

Top view
Vertical airflow direction louver: Up
Horizontal airflow direction louver: Left & Right

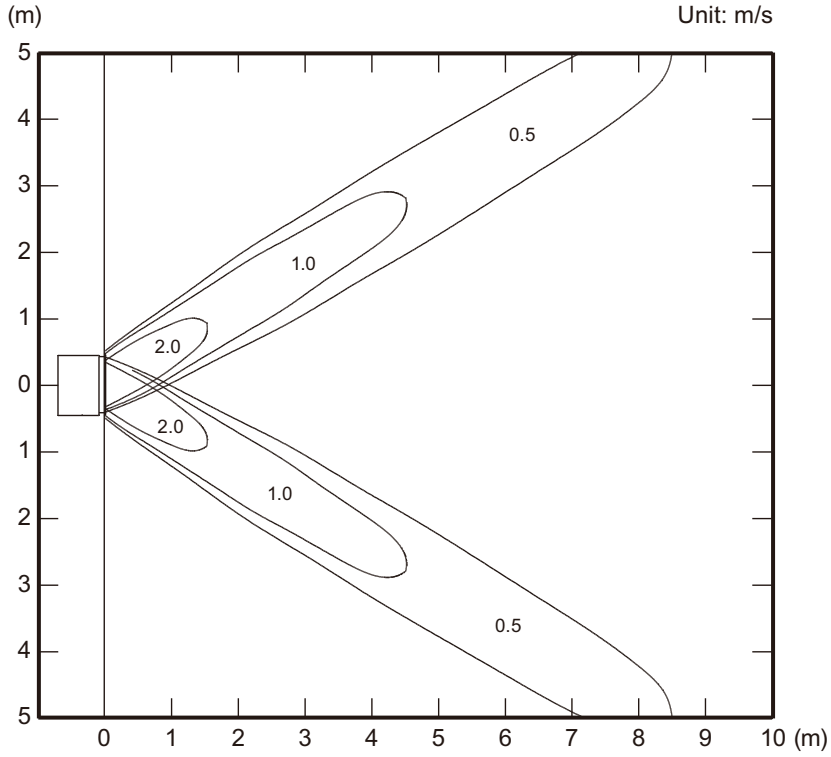

Side view
Vertical airflow direction louver: Up
Horizontal airflow direction louver: Center

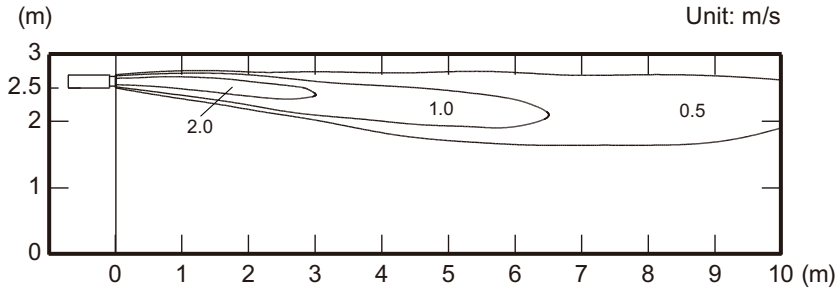

INDOOR UNITS

INDOOR UNITS

Measuring conditions	Fan speed	Operation mode
NOTE: Reference data	HIGH	HEAT

- **Air velocity distribution**

Side view
Vertical airflow direction louver: Down
Horizontal airflow direction louver: Center

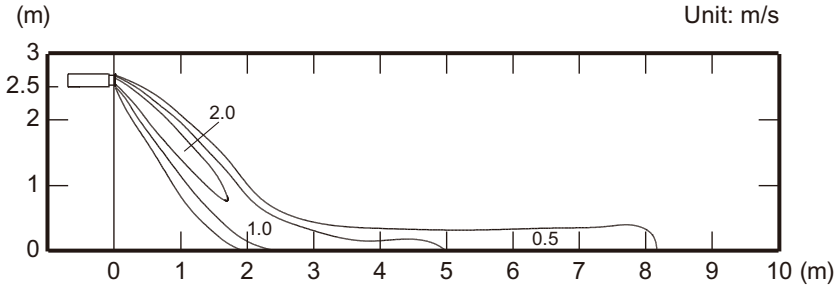

- **Air temperature distribution**

Side view
Vertical airflow direction louver: Down
Horizontal airflow direction louver: Center

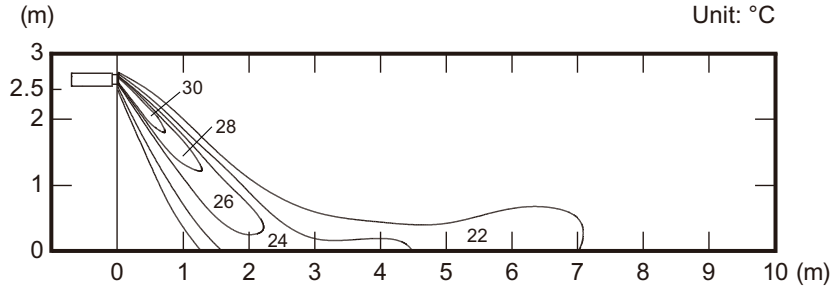

INDOOR UNITS

INDOOR UNITS

■ Model: ARXD024GLEH (with UTD-GXSC-W)

Measuring conditions	Fan speed	Operation mode
	HIGH	FAN

• Air velocity distribution

Top view
Vertical airflow direction louver: Up
Horizontal airflow direction louver: Center

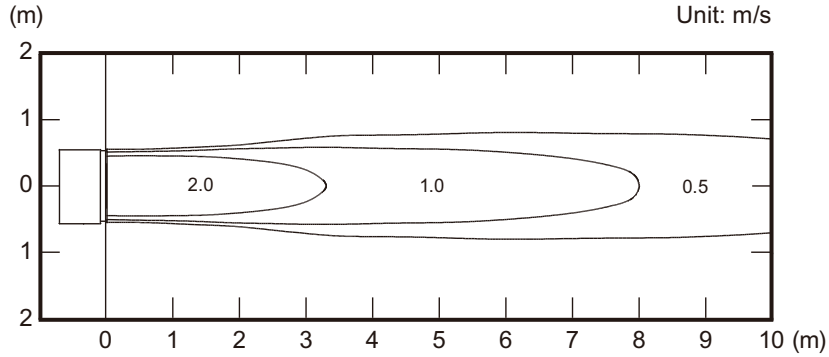

Top view
Vertical airflow direction louver: Up
Horizontal airflow direction louver: Left & Right

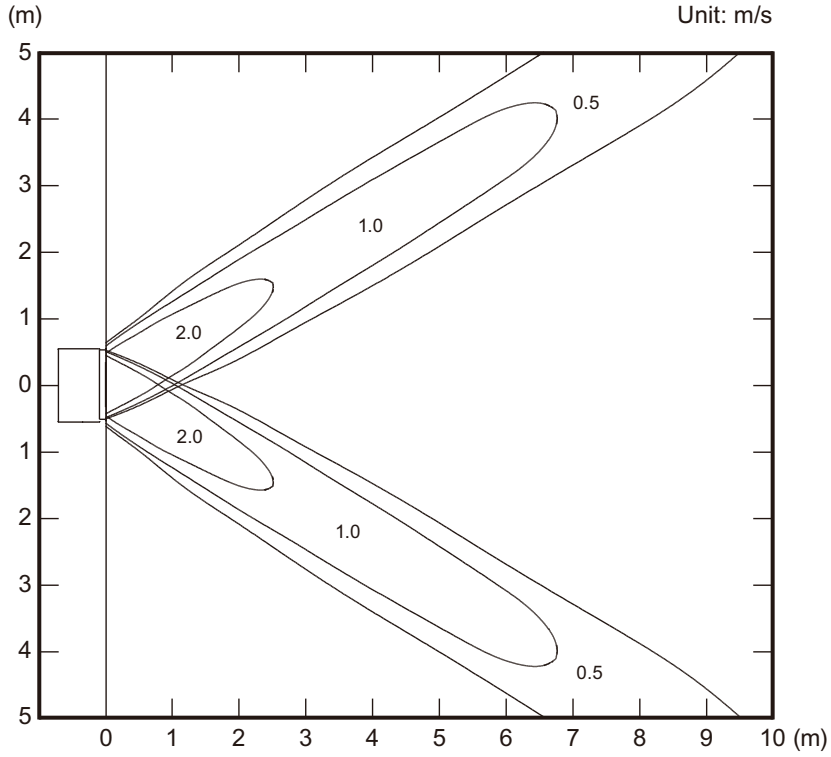

Side view
Vertical airflow direction louver: Up
Horizontal airflow direction louver: Center

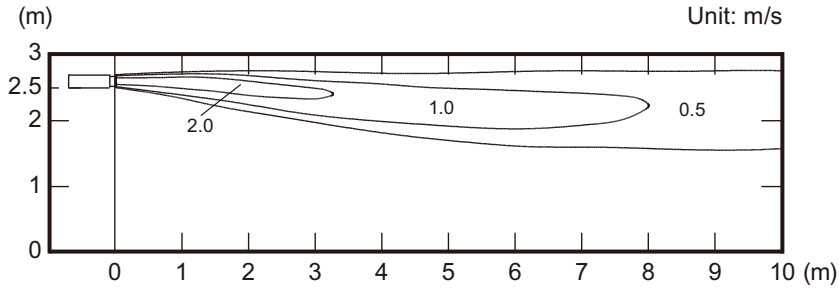

INDOOR UNITS

Measuring conditions	Fan speed	Operation mode
NOTE: Reference data	HIGH	HEAT

- **Air velocity distribution**

Side view
Vertical airflow direction louver: Down
Horizontal airflow direction louver: Center

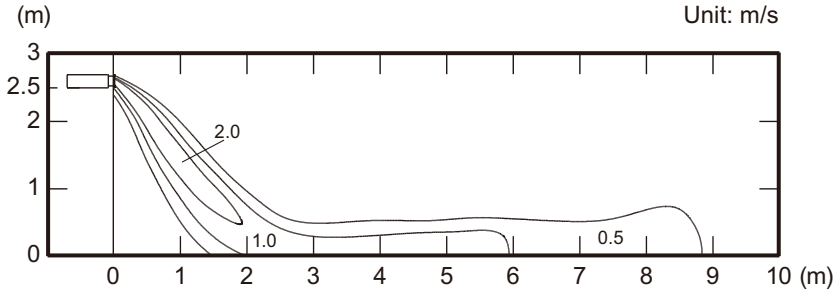

- **Air temperature distribution**

Side view
Vertical airflow direction louver: Down
Horizontal airflow direction louver: Center

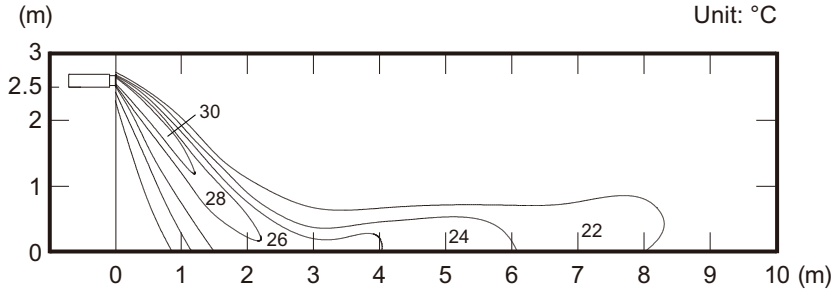

INDOOR UNITS

INDOOR UNITS

6-8. Compact floor type

■ Models: AG∗A004GCGH and AG∗E004GCEH

Measuring conditions	Fan speed	Operation mode	Fan select
	HIGH	FAN	Upper & Lower

- **Air velocity distribution**

Top view
Vertical airflow direction louver: Up
Horizontal airflow direction louver: Center

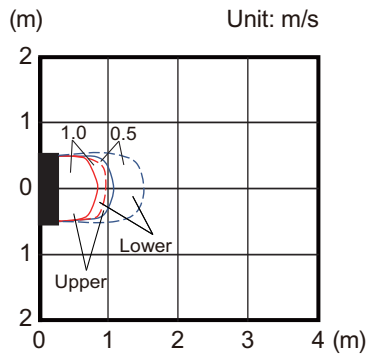

Top view
Vertical airflow direction louver: Up
Horizontal airflow direction louver: Left & Right

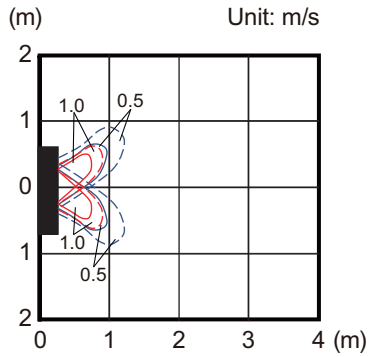

Side view
Vertical airflow direction louver: Up
Horizontal airflow direction louver: Center

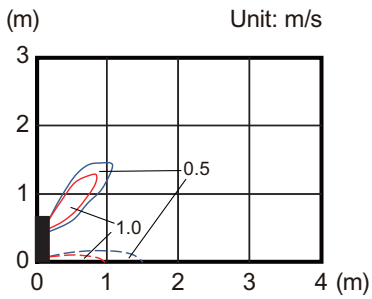

Side view
Vertical airflow direction louver: Center
Horizontal airflow direction louver: Center

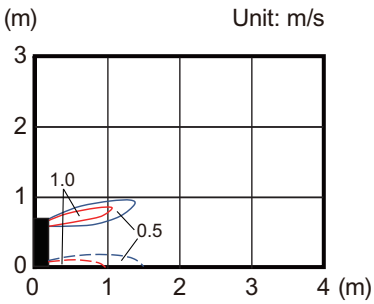

■ Models: AG∗A007GCGH, AG∗A009GCGH, AG∗E007GCEH, and AG∗E009GCEH

Measuring conditions	Fan speed	Operation mode	Fan select
	HIGH	FAN	Upper & Lower

• Air velocity distribution

Top view
Vertical airflow direction louver: Up
Horizontal airflow direction louver: Center

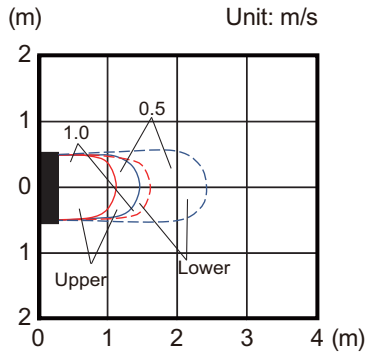

Top view
Vertical airflow direction louver: Up
Horizontal airflow direction louver: Left & Right

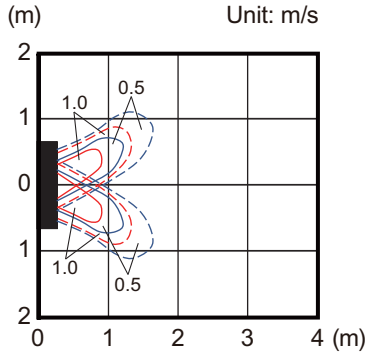

Side view
Vertical airflow direction louver: Up
Horizontal airflow direction louver: Center

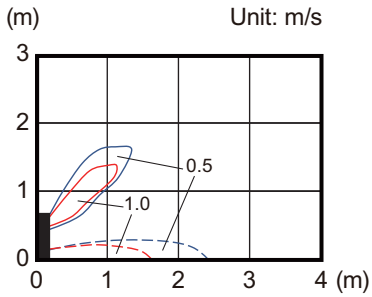

Side view
Vertical airflow direction louver: Center
Horizontal airflow direction louver: Center

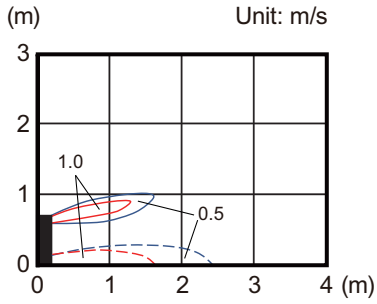

■ Models: AG∗A012GCGH and AG∗E012GCEH

Measuring conditions	Fan speed	Operation mode	Fan select
	HIGH	FAN	Upper & Lower

• Air velocity distribution

Top view
Vertical airflow direction louver: Up
Horizontal airflow direction louver: Center

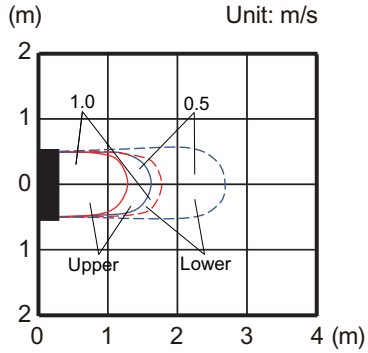

Top view
Vertical airflow direction louver: Up
Horizontal airflow direction louver: Left & Right

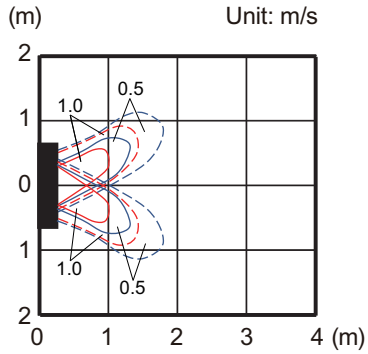

Side view
Vertical airflow direction louver: Up
Horizontal airflow direction louver: Center

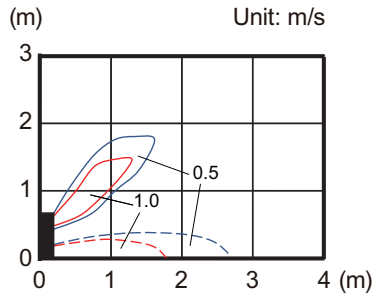

Side view
Vertical airflow direction louver: Center
Horizontal airflow direction louver: Center

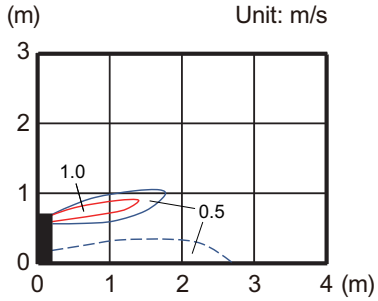

■ Models: AG∗A014GCGH and AG∗E014GCEH

Measuring conditions	Fan speed	Operation mode	Fan select
	HIGH	FAN	Upper & Lower

• Air velocity distribution

Top view
Vertical airflow direction louver: Up
Horizontal airflow direction louver: Center

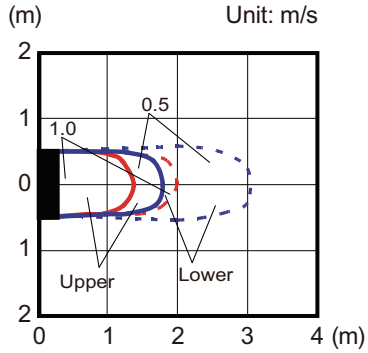

Top view
Vertical airflow direction louver: Up
Horizontal airflow direction louver: Left & Right

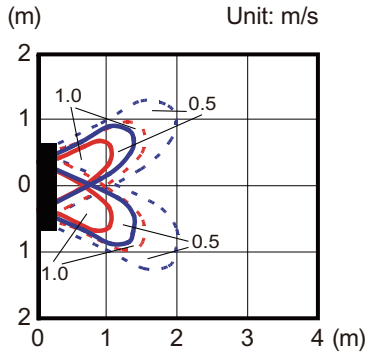

Side view
Vertical airflow direction louver: Up
Horizontal airflow direction louver: Center

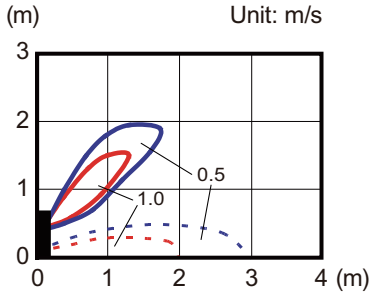

Side view
Vertical airflow direction louver: Center
Horizontal airflow direction louver: Center

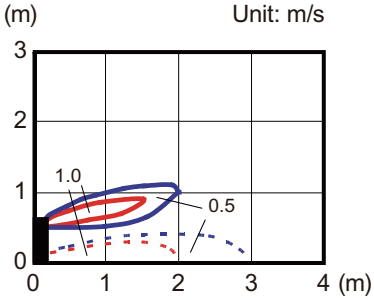

INDOOR UNITS

6-9. Floor/Ceiling type

■ Models: AB∗A012GTEH and AB∗A014GTEH (Floor console)

Measuring conditions	Fan speed	Operation mode
	HIGH	FAN

- **Air velocity distribution**

Top view
Vertical airflow direction louver: Down
Horizontal airflow direction louver: Center

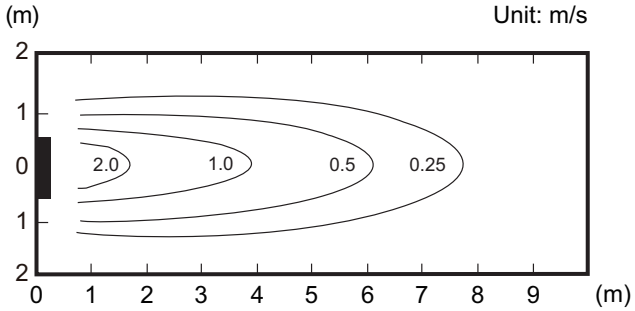

Top view
Vertical airflow direction louver: Down
Horizontal airflow direction louver: Left & Right

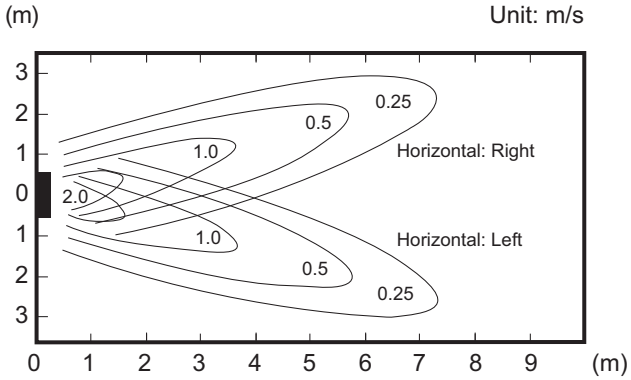

Side view
Vertical airflow direction louver: Down
Horizontal airflow direction louver: Center

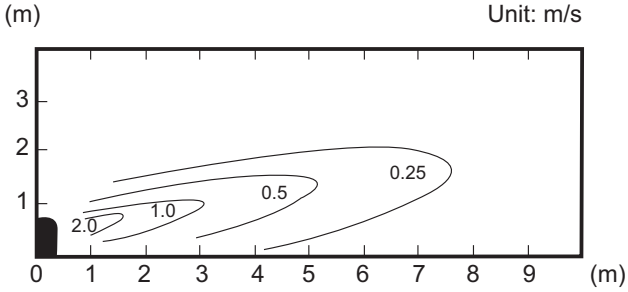

Side view
Vertical airflow direction louver: Center
Horizontal airflow direction louver: Center

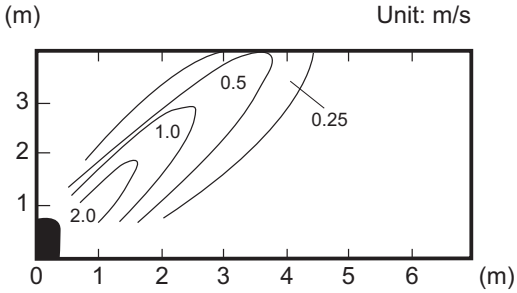

Side view
Vertical airflow direction louver: Up
Horizontal airflow direction louver: Center

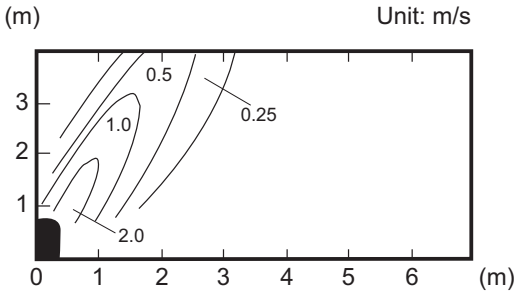

■ Models: AB∗A012GTEH and AB∗A014GTEH (Under ceiling)

Measuring conditions	Fan speed	Operation mode
	HIGH	FAN

- **Air velocity distribution**

Top view
Vertical airflow direction louver: Up
Horizontal airflow direction louver: Center

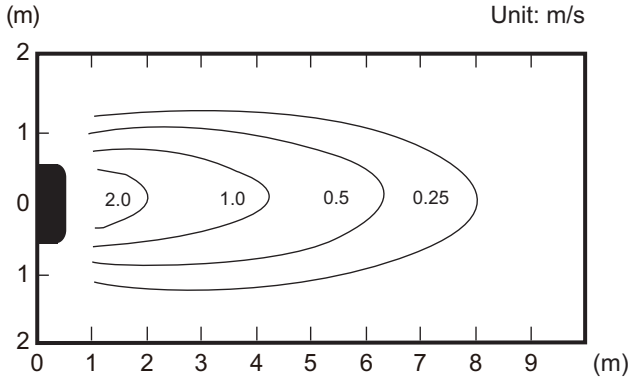

Top view
Vertical airflow direction louver: Up
Horizontal airflow direction louver: Left & Right

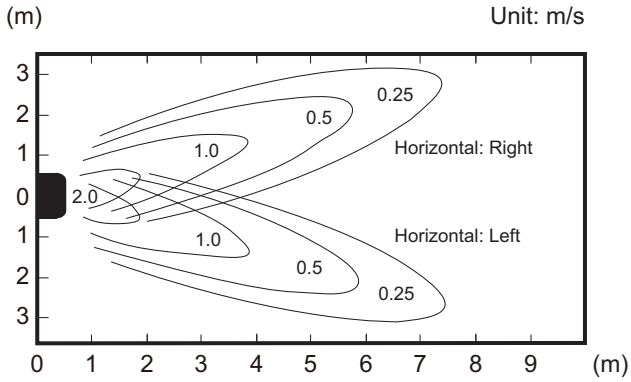

Side view
Vertical airflow direction louver: Up
Horizontal airflow direction louver: Center

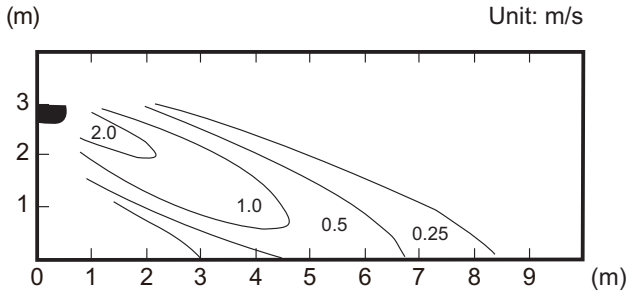

Side view
Vertical airflow direction louver: Center
Horizontal airflow direction louver: Center

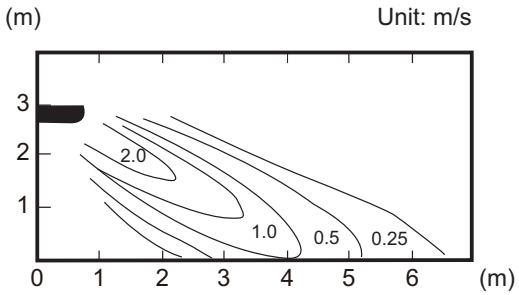

Side view
Vertical airflow direction louver: Down
Horizontal airflow direction louver: Center

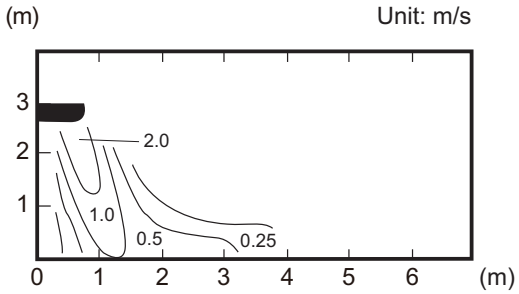

INDOOR UNITS

■ Model: AB∗A018GTEH (Floor console)

Measuring conditions	Fan speed	Operation mode
	HIGH	FAN

• Air velocity distribution

Top view
Vertical airflow direction louver: Down
Horizontal airflow direction louver: Center

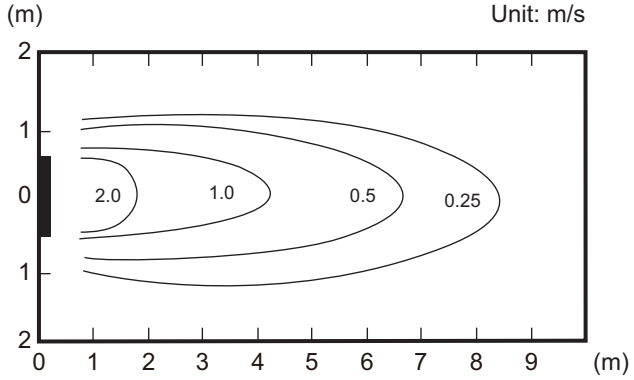

Top view
Vertical airflow direction louver: Down
Horizontal airflow direction louver: Left & Right

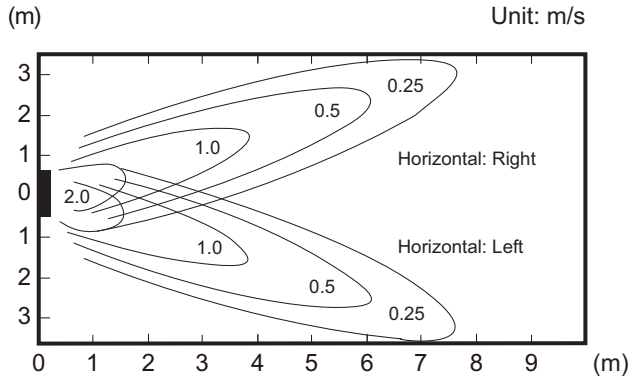

Side view
Vertical airflow direction louver: Down
Horizontal airflow direction louver: Center

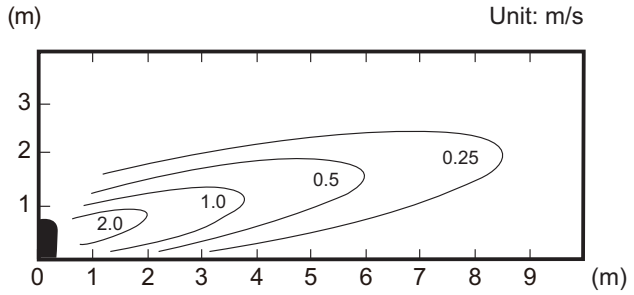

Side view
Vertical airflow direction louver: Center
Horizontal airflow direction louver: Center

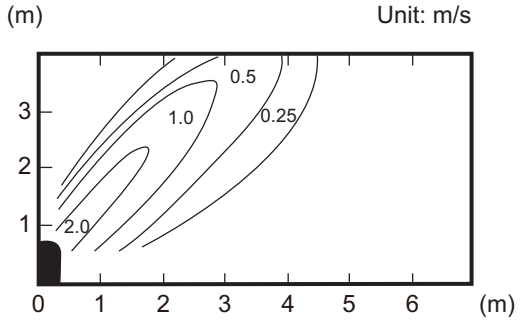

Side view
Vertical airflow direction louver: Up
Horizontal airflow direction louver: Center

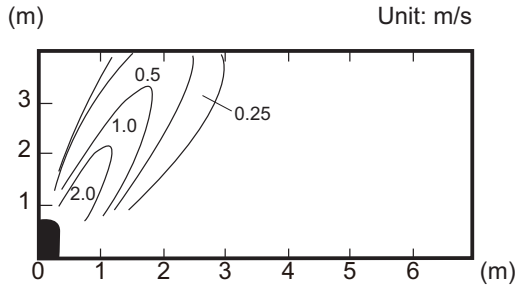

INDOOR UNITS

■ Model: AB∗A018GTEH (Under ceiling)

Measuring conditions	Fan speed	Operation mode
	HIGH	FAN

- **Air velocity distribution**

Top view
Vertical airflow direction louver: Up
Horizontal airflow direction louver: Center

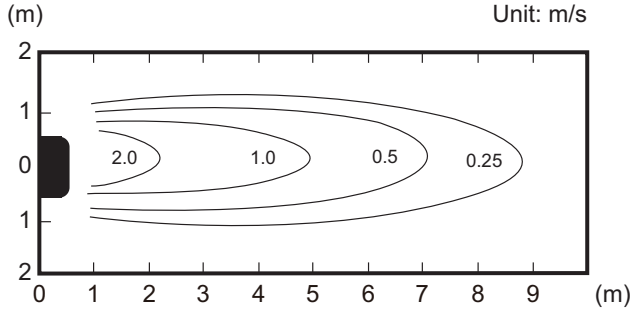

Top view
Vertical airflow direction louver: Up
Horizontal airflow direction louver: Left & Right

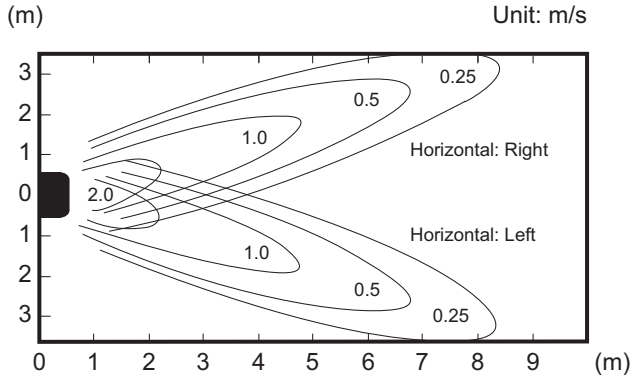

Side view
Vertical airflow direction louver: Up
Horizontal airflow direction louver: Center

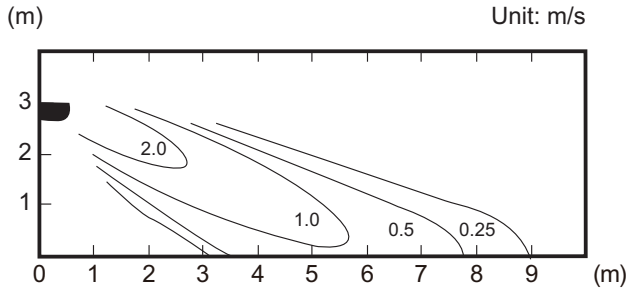

Side view
Vertical airflow direction louver: Center
Horizontal airflow direction louver: Center

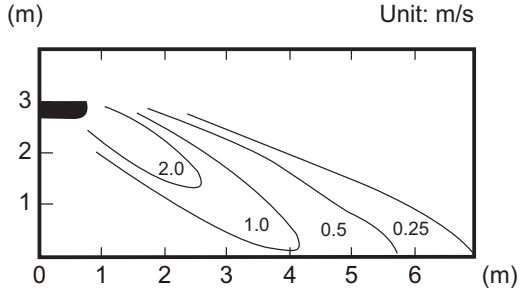

Side view
Vertical airflow direction louver: Down
Horizontal airflow direction louver: Center

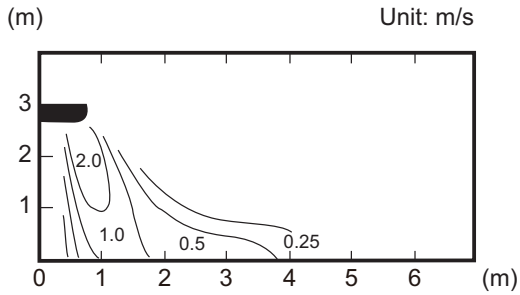

INDOOR UNITS

■ Model: AB∗A024GTEH (Floor console)

Measuring conditions	Fan speed	Operation mode
	HIGH	FAN

• Air velocity distribution

Top view
Vertical airflow direction louver: Down
Horizontal airflow direction louver: Center

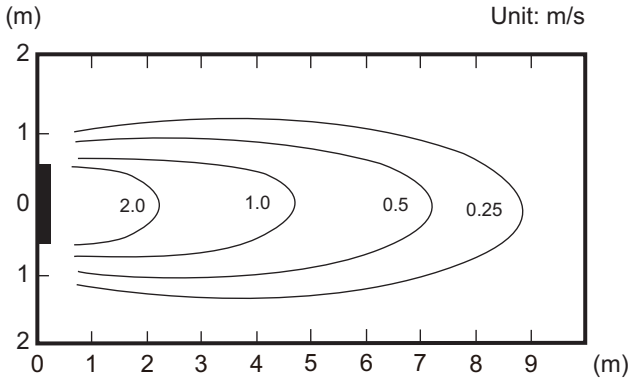

Top view
Vertical airflow direction louver: Down
Horizontal airflow direction louver: Left & Right

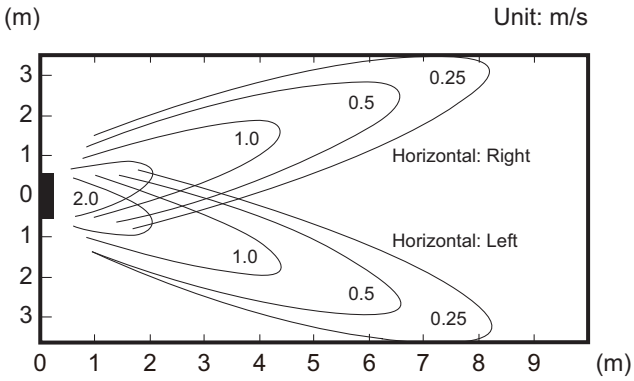

Side view
Vertical airflow direction louver: Down
Horizontal airflow direction louver: Center

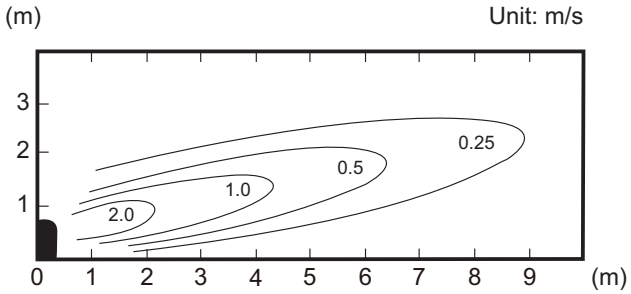

Side view
Vertical airflow direction louver: Center
Horizontal airflow direction louver: Center

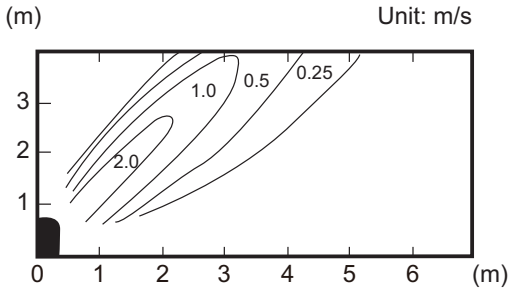

Side view
Vertical airflow direction louver: Up
Horizontal airflow direction louver: Center

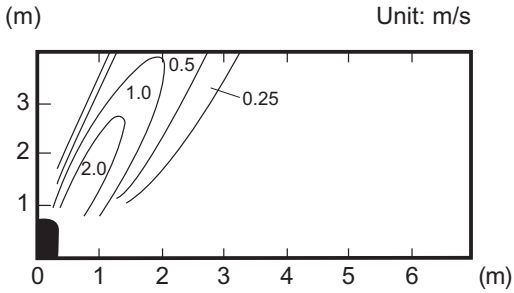

INDOOR UNITS

INDOOR UNITS

■ Model: AB∗A024GTEH (Under ceiling)

Measuring conditions	Fan speed	Operation mode
	HIGH	FAN

- **Air velocity distribution**

Top view
Vertical airflow direction louver: Up
Horizontal airflow direction louver: Center

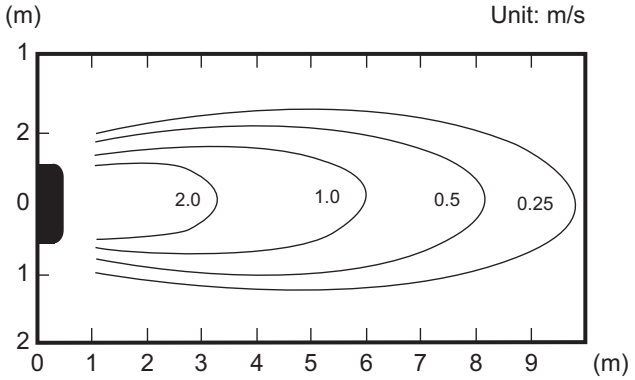

Top view
Vertical airflow direction louver: Up
Horizontal airflow direction louver: Left & Right

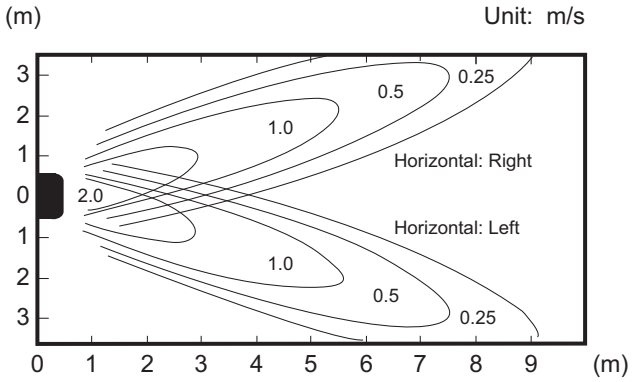

Side view
Vertical airflow direction louver: Up
Horizontal airflow direction louver: Center

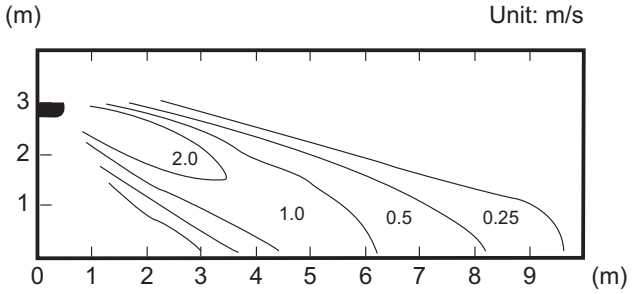

Side view
Vertical airflow direction louver: Center
Horizontal airflow direction louver: Center

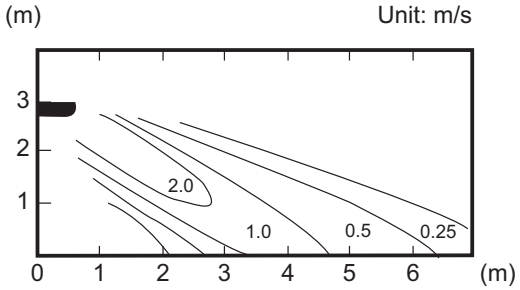

Side view
Vertical airflow direction louver: Down
Horizontal airflow direction louver: Center

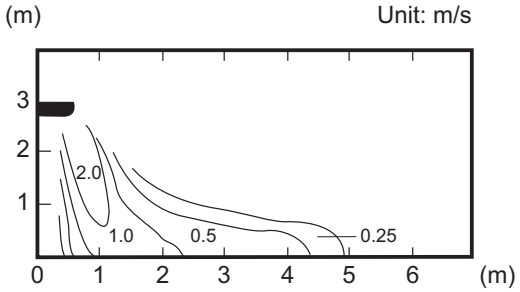

INDOOR UNITS

6-10. Ceiling type

■ Model: AB∗A030GTEH

Measuring conditions	Fan speed	Operation mode
	HIGH	FAN

- **Air velocity distribution**

Top view
Vertical airflow direction louver: Up
Horizontal airflow direction louver: Center

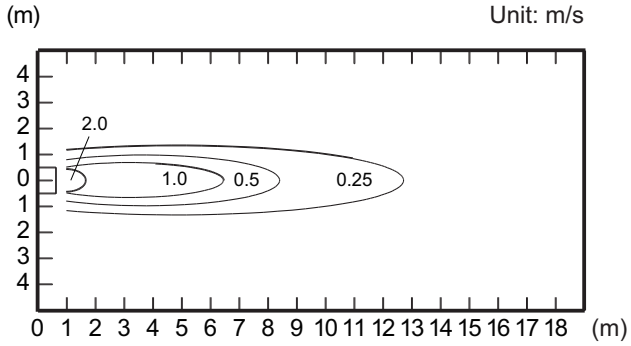

Top view
Vertical airflow direction louver: Up
Horizontal airflow direction louver: Left & Right

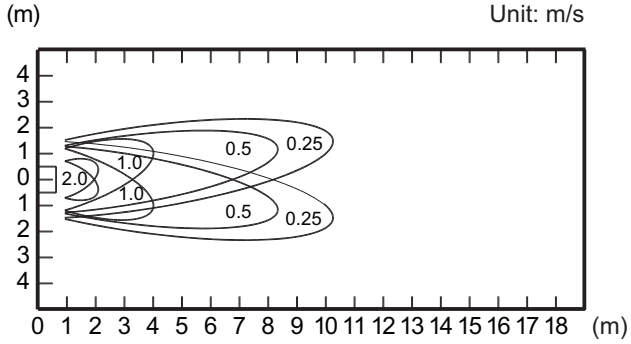

Side view
Vertical airflow direction louver: Up
Horizontal airflow direction louver: Center

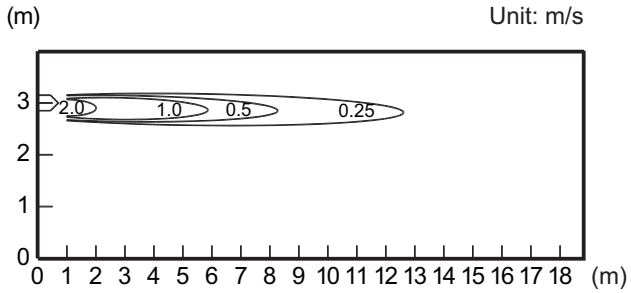

Side view
Vertical airflow direction louver: Center
Horizontal airflow direction louver: Center

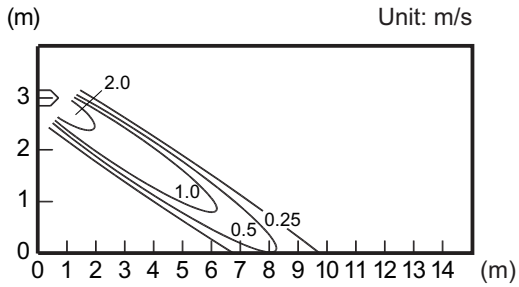

Side view
Vertical airflow direction louver: Down
Horizontal airflow direction louver: Center

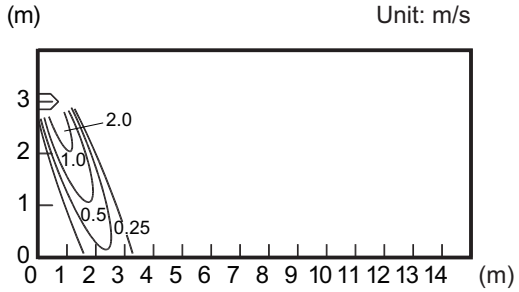

■ Model: AB∗A036GTEH

Measuring conditions	Fan speed	Operation mode
	HIGH	FAN

• Air velocity distribution

Top view
Vertical airflow direction louver: Up
Horizontal airflow direction louver: Center

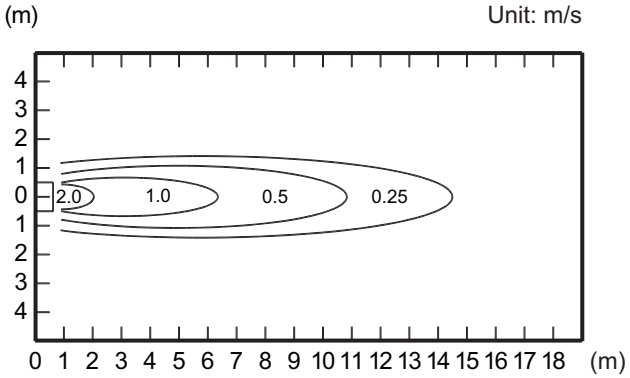

Top view
Vertical airflow direction louver: Up
Horizontal airflow direction louver: Left & Right

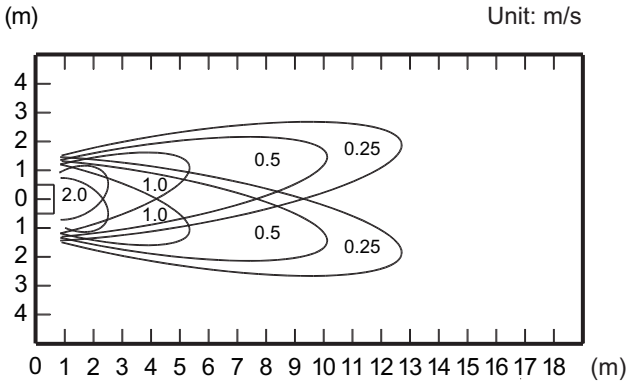

Side view
Vertical airflow direction louver: Up
Horizontal airflow direction louver: Center

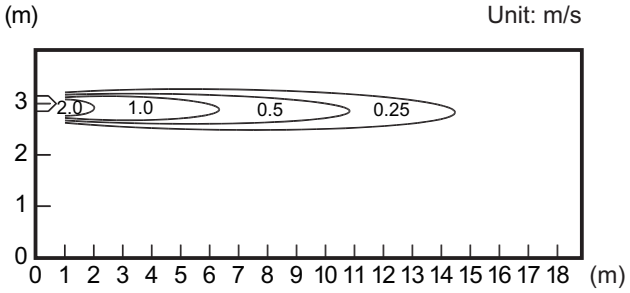

Side view
Vertical airflow direction louver: Center
Horizontal airflow direction louver: Center

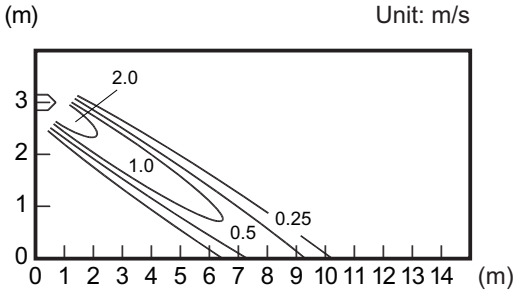

Side view
Vertical airflow direction louver: Down
Horizontal airflow direction louver: Center

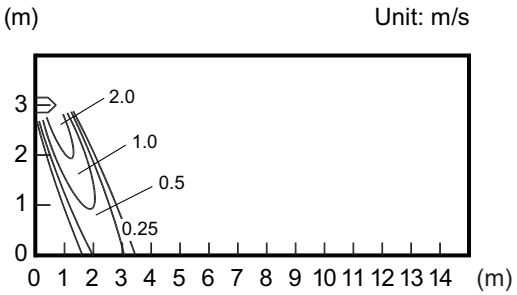

INDOOR UNITS

■ Model: AB∗A045GTEH

Measuring conditions	Fan speed	Operation mode
	HIGH	FAN

• Air velocity distribution

Top view
Vertical airflow direction louver: Up
Horizontal airflow direction louver: Center

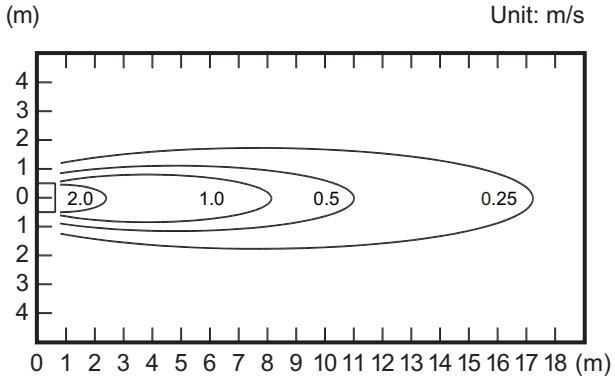

Top view
Vertical airflow direction louver: Up
Horizontal airflow direction louver: Left & Right

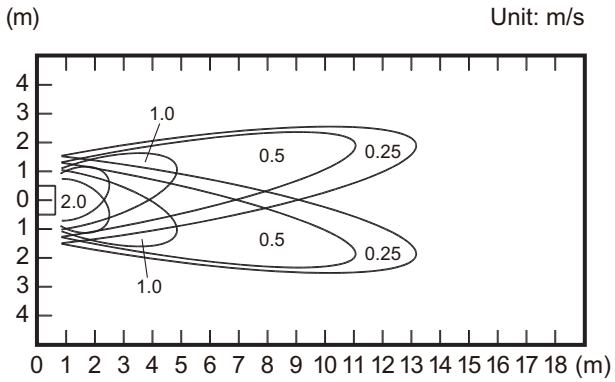

Side view
Vertical airflow direction louver: Up
Horizontal airflow direction louver: Center

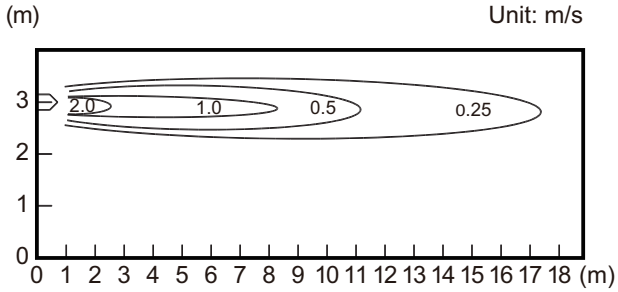

Side view
Vertical airflow direction louver: Center
Horizontal airflow direction louver: Center

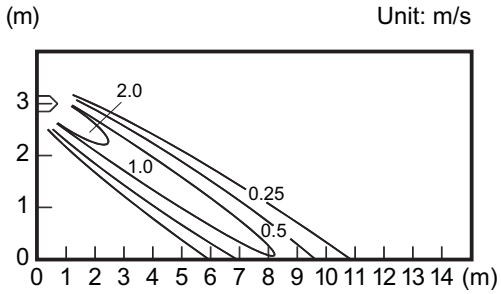

Side view
Vertical airflow direction louver: Down
Horizontal airflow direction louver: Center

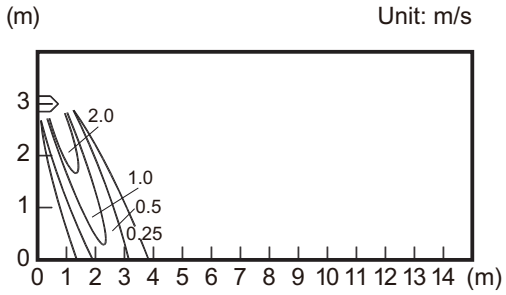

■ Model: AB∗A054GTEH

Measuring conditions	Fan speed	Operation mode
	HIGH	FAN

• Air velocity distribution

Top view
Vertical airflow direction louver: Up
Horizontal airflow direction louver: Center

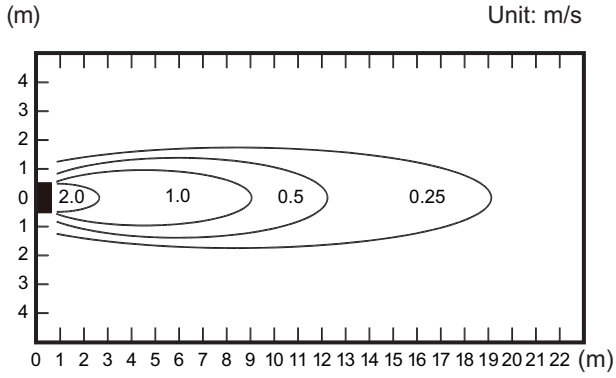

Top view
Vertical airflow direction louver: Up
Horizontal airflow direction louver: Left & Right

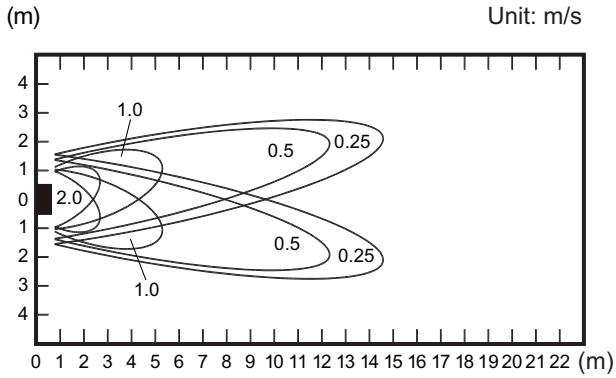

Side view
Vertical airflow direction louver: Up
Horizontal airflow direction louver: Center

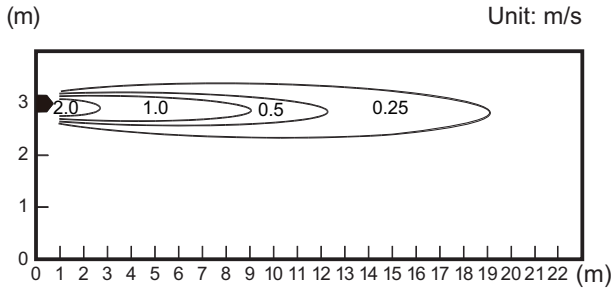

Side view
Vertical airflow direction louver: Center
Horizontal airflow direction louver: Center

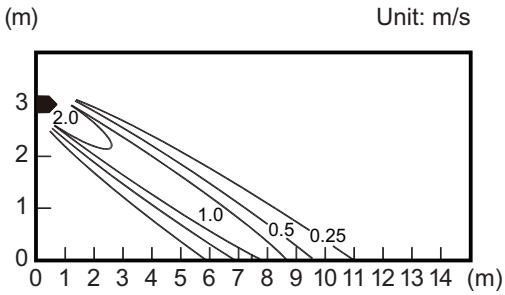

Side view
Vertical airflow direction louver: Down
Horizontal airflow direction louver: Center

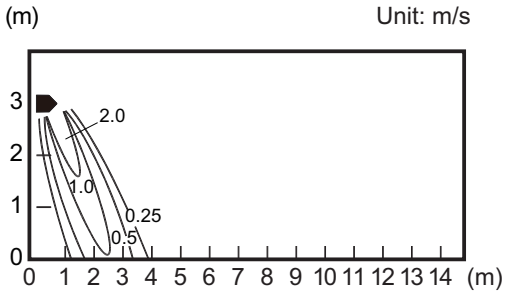

6-11. Wall mounted type

■ Models: AS∗A004GCGH and AS∗E004GCEH

Measuring conditions	Fan speed	Operation mode
	HIGH	FAN

- **Air velocity distribution**

Top view
Vertical airflow direction louver: Up
Horizontal airflow direction louver: Center

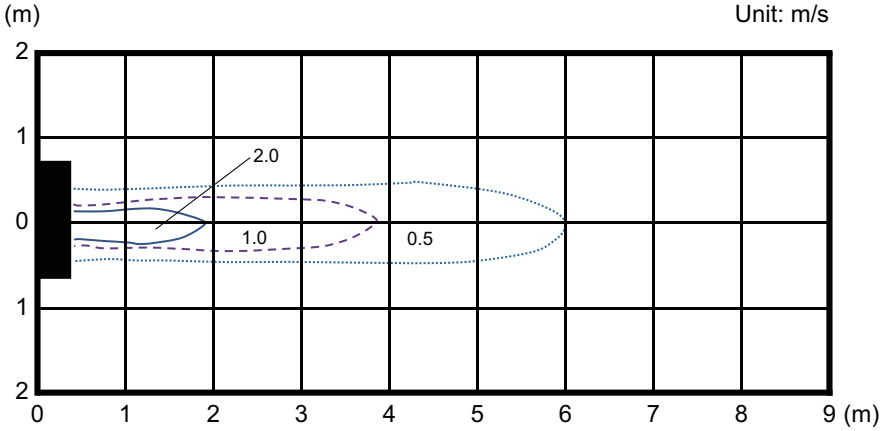

Top view
Vertical airflow direction louver: Up
Horizontal airflow direction louver: Left & Right

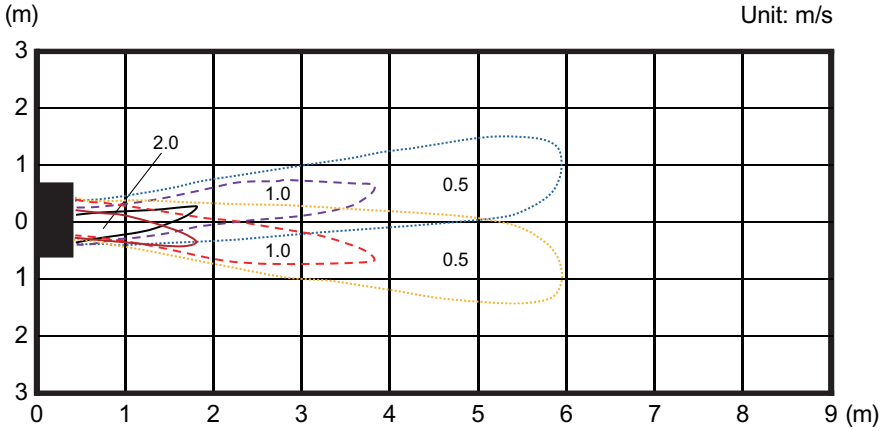

Side view
Vertical airflow direction louver: Up
Horizontal airflow direction louver: Center

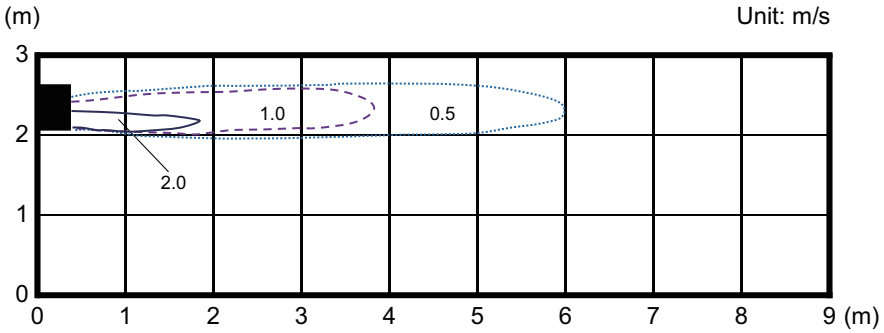

Side view
Vertical airflow direction louver: Down
Horizontal airflow direction louver: Center

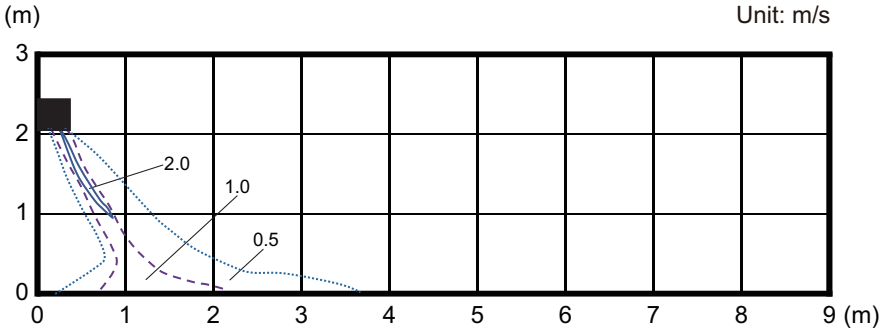

INDOOR UNITS

■ Models: AS∗A007GCGH and AS∗E007GCEH

Measuring conditions	Fan speed	Operation mode
	HIGH	FAN

• Air velocity distribution

Top view
Vertical airflow direction louver: Up
Horizontal airflow direction louver: Center

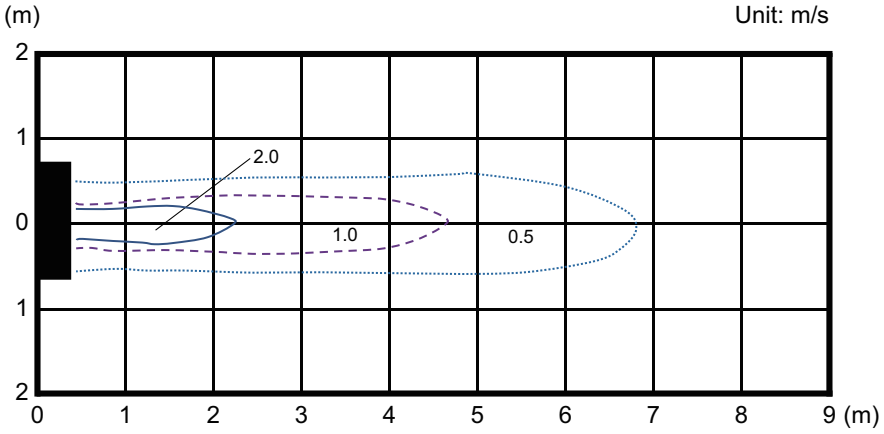

Top view
Vertical airflow direction louver: Up
Horizontal airflow direction louver: Left & Right

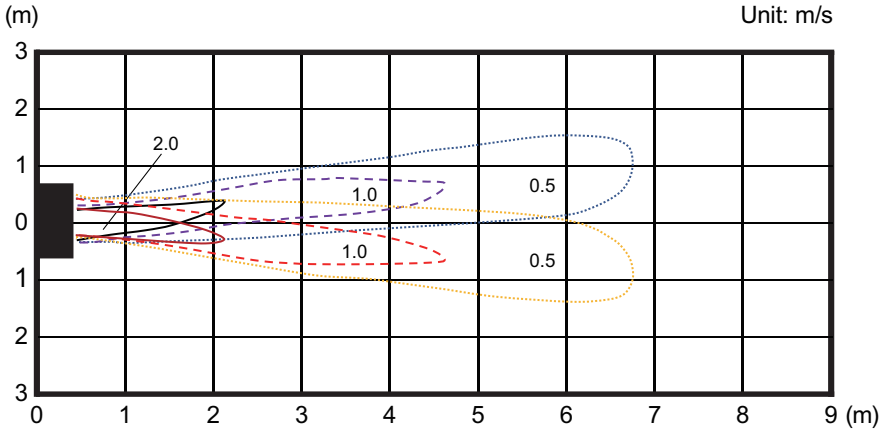

Side view
Vertical airflow direction louver: Up
Horizontal airflow direction louver: Center

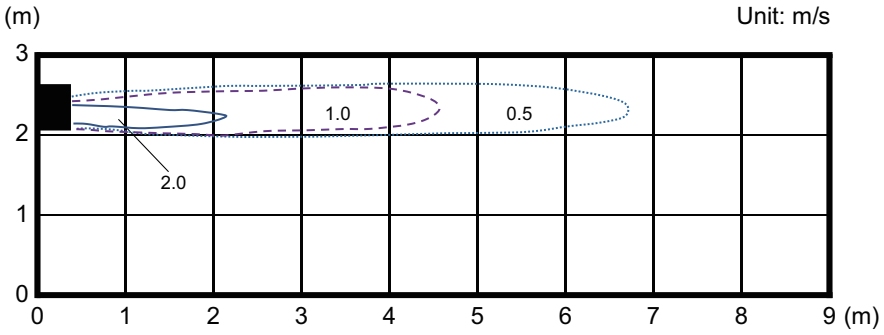

Side view
Vertical airflow direction louver: Down
Horizontal airflow direction louver: Center

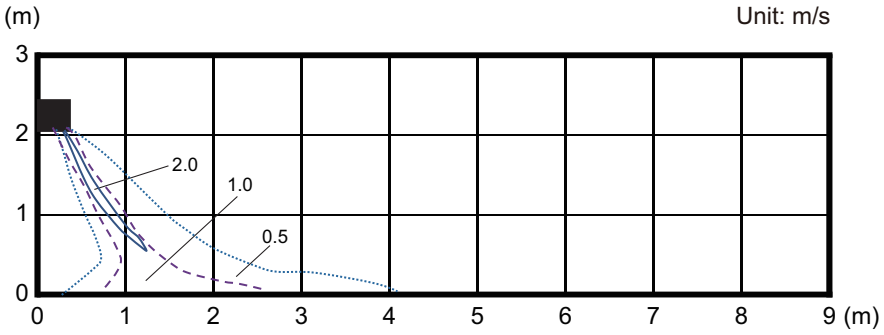

INDOOR UNITS

INDOOR UNITS

■ Models: AS∗A009GCGH and AS∗E009GCEH

Measuring conditions	Fan speed	Operation mode
	HIGH	FAN

• Air velocity distribution

Top view
Vertical airflow direction louver: Up
Horizontal airflow direction louver: Center

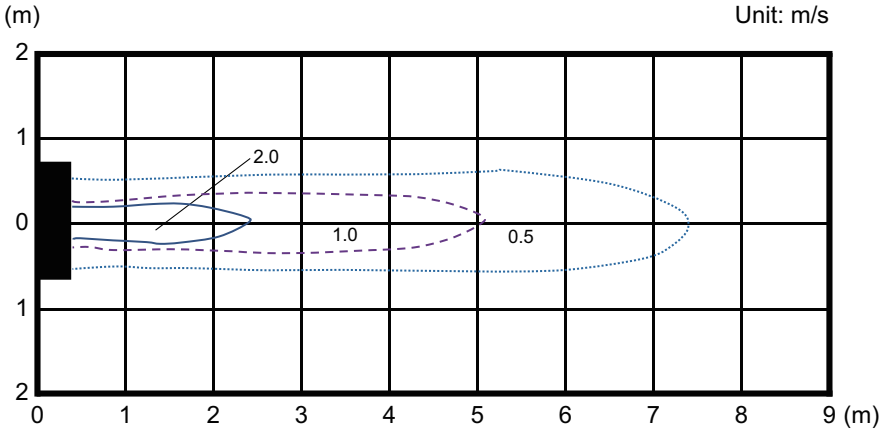

Top view
Vertical airflow direction louver: Up
Horizontal airflow direction louver: Left & Right

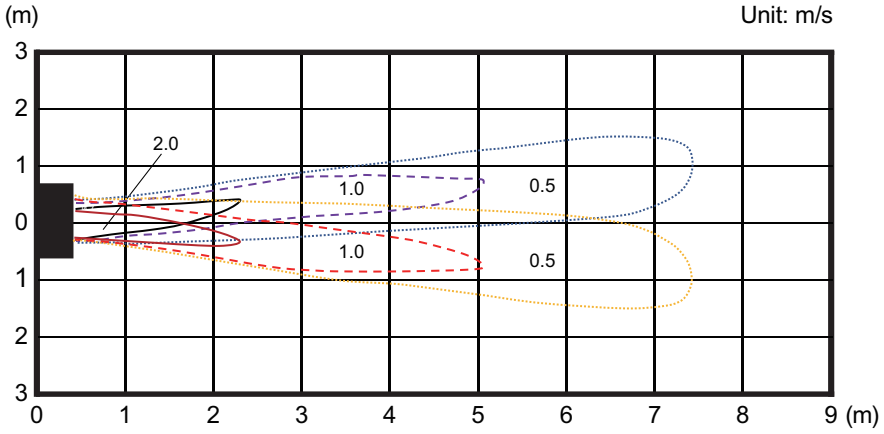

Side view
Vertical airflow direction louver: Up
Horizontal airflow direction louver: Center

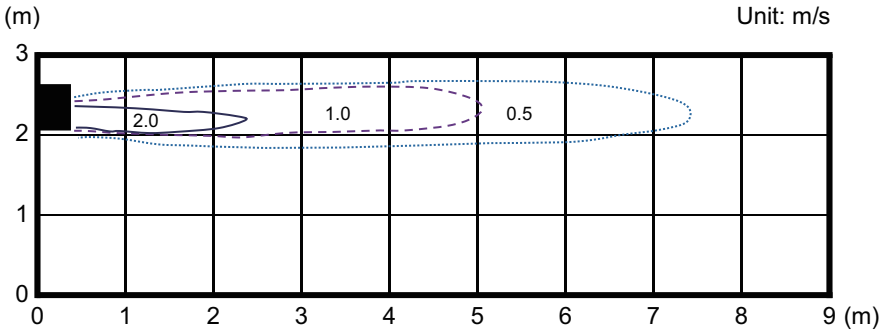

Side view
Vertical airflow direction louver: Down
Horizontal airflow direction louver: Center

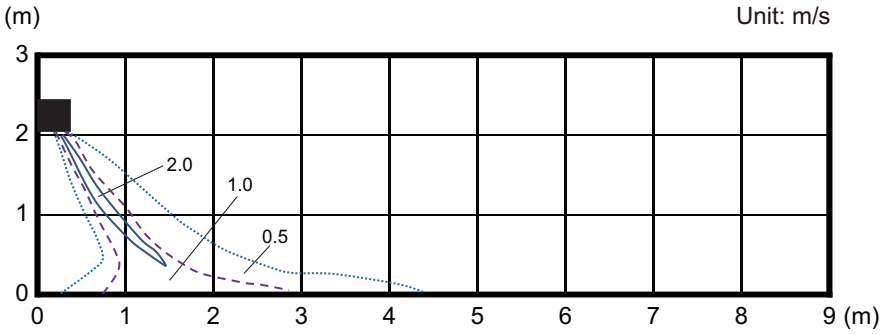

INDOOR UNITS

INDOOR UNITS

■ Models: AS∗A012GCGH and AS∗E012GCEH

Measuring conditions	Fan speed	Operation mode
	HIGH	FAN

• Air velocity distribution

Top view
Vertical airflow direction louver: Up
Horizontal airflow direction louver: Center

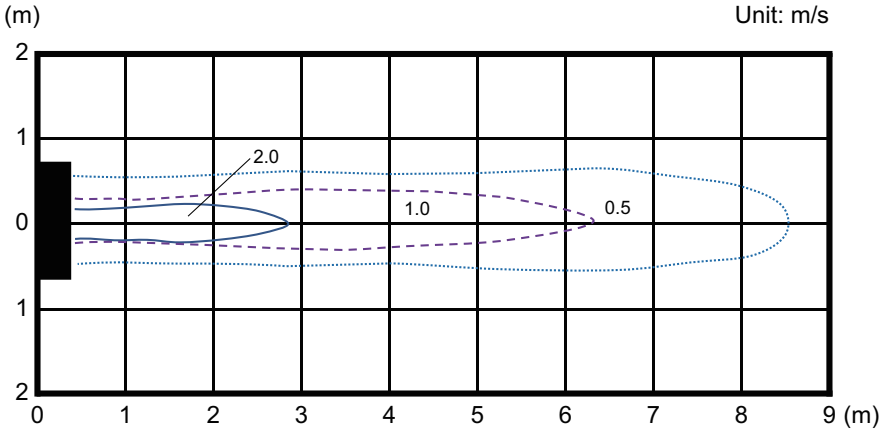

Top view
Vertical airflow direction louver: Up
Horizontal airflow direction louver: Left & Right

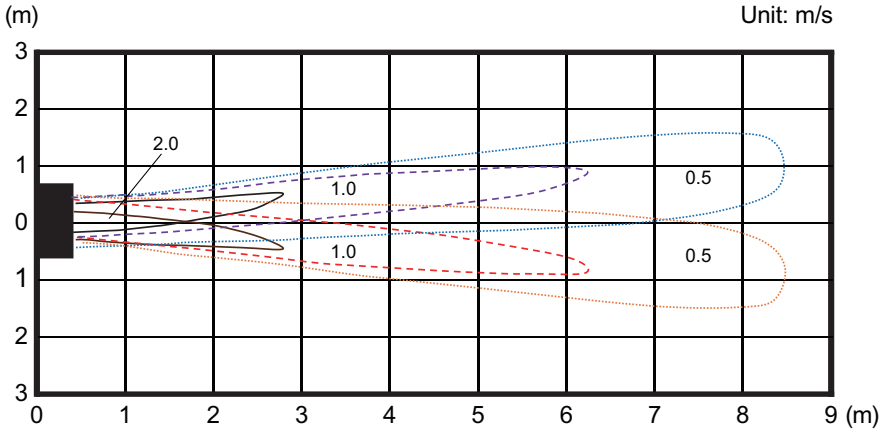

Side view
Vertical airflow direction louver: Up
Horizontal airflow direction louver: Center

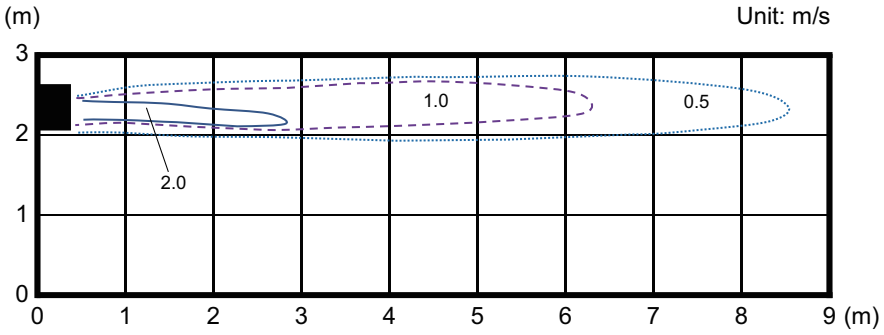

Side view
Vertical airflow direction louver: Down
Horizontal airflow direction louver: Center

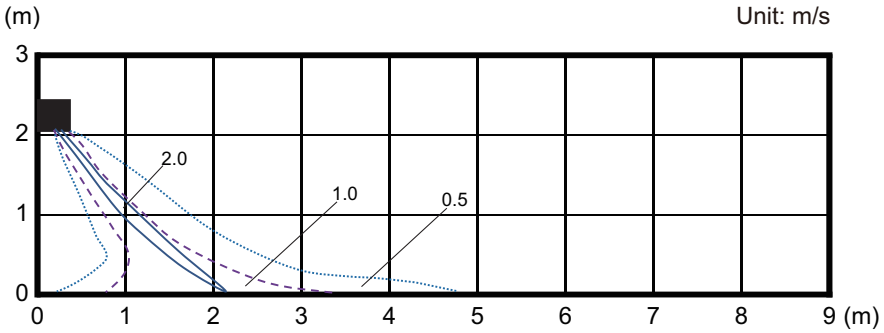

INDOOR UNITS

■ Models: AS∗A014GCGH and AS∗E014GCEH

Measuring conditions	Fan speed	Operation mode
	HIGH	FAN

• Air velocity distribution

Top view
Vertical airflow direction louver: Up
Horizontal airflow direction louver: Center

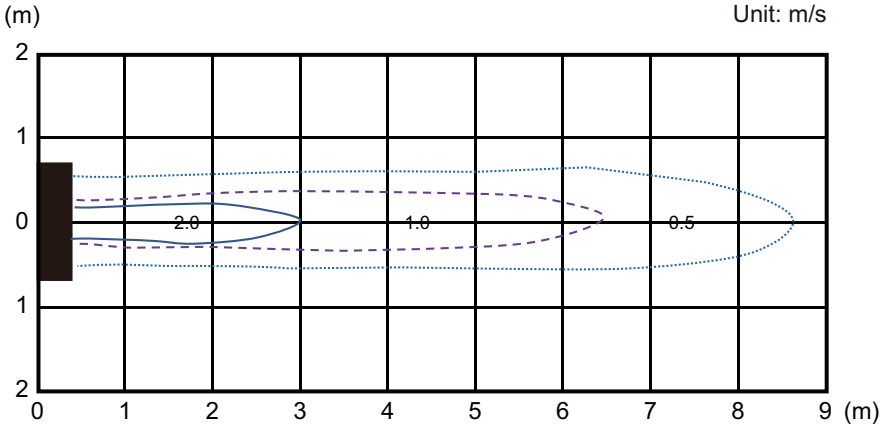

Top view
Vertical airflow direction louver: Up
Horizontal airflow direction louver: Left & Right

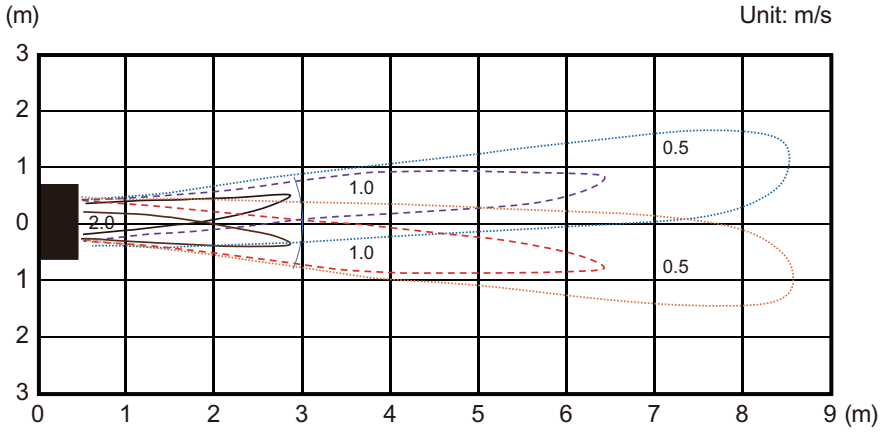

Side view
Vertical airflow direction louver: Up
Horizontal airflow direction louver: Center

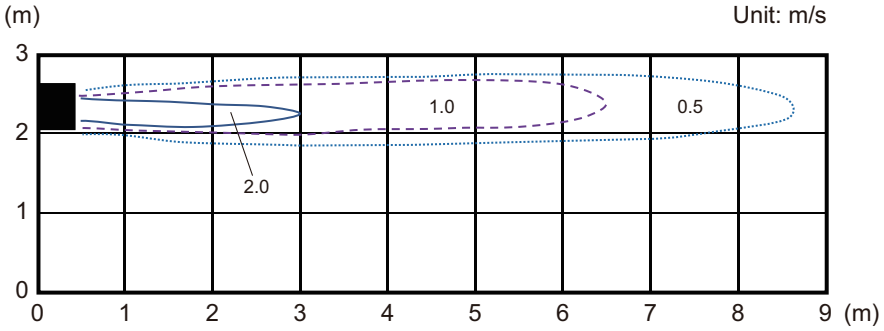

Side view
Vertical airflow direction louver: Down
Horizontal airflow direction louver: Center

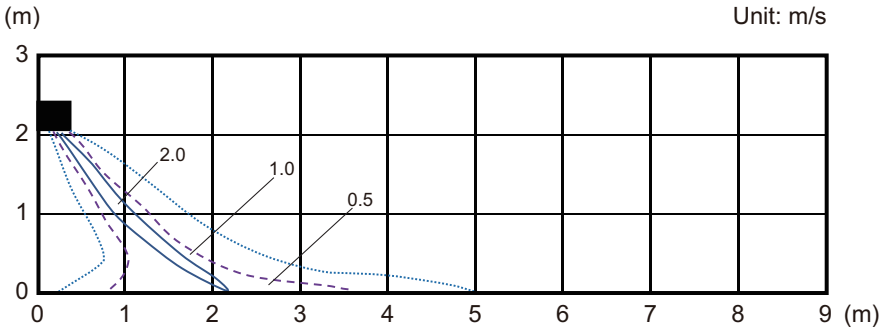

INDOOR UNITS

■ Model: AS∗A18GBCH

Measuring conditions	Fan speed	Operation mode
	HIGH	FAN

- **Air velocity distribution**

Top view
Vertical airflow direction louver: Up
Horizontal airflow direction louver: Center

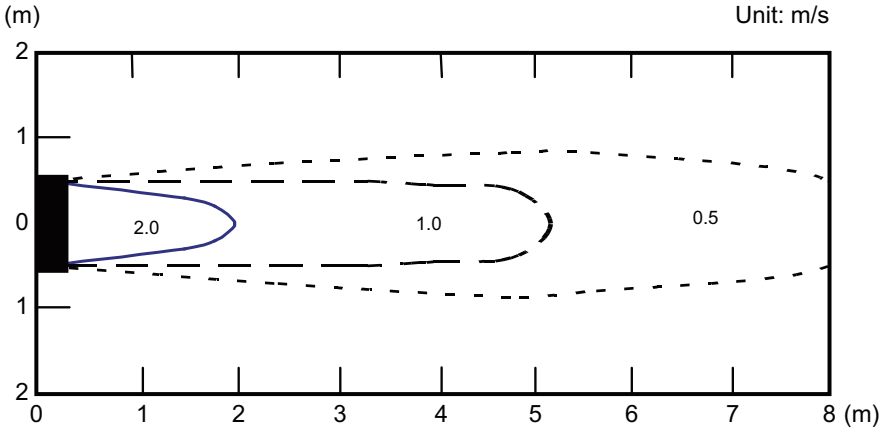

Top view
Vertical airflow direction louver: Up
Horizontal airflow direction louver: Left & Right

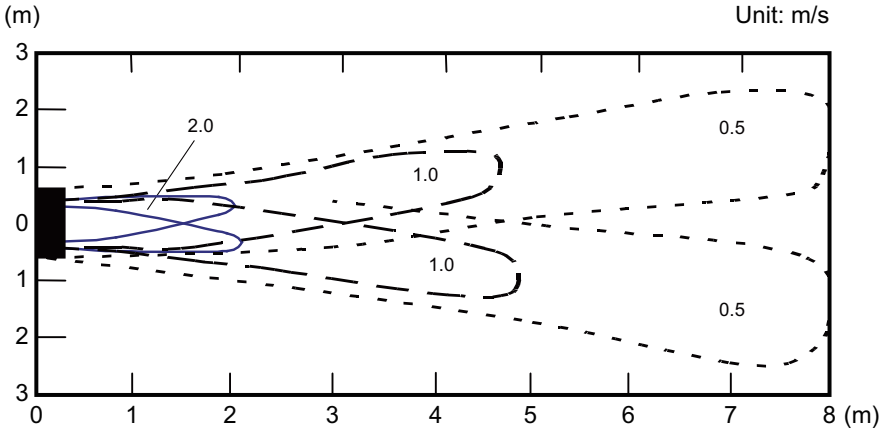

Side view
Vertical airflow direction louver: Up
Horizontal airflow direction louver: Center

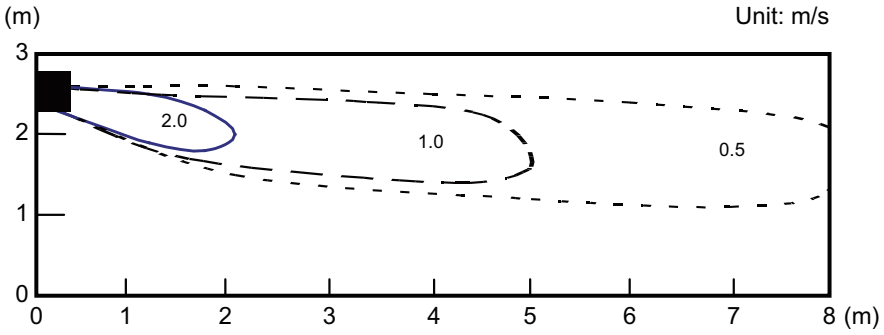

Side view
Vertical airflow direction louver: Down
Horizontal airflow direction louver: Center

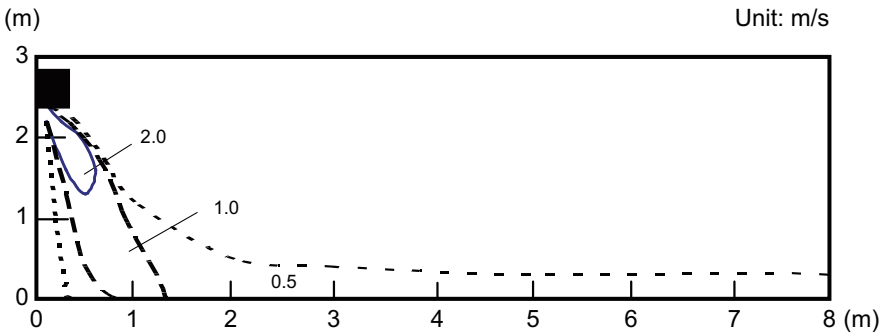

INDOOR UNITS

■ Model: AS∗A24GBCH

Measuring conditions	Fan speed	Operation mode
	HIGH	FAN

- **Air velocity distribution**

Top view
Vertical airflow direction louver: Up
Horizontal airflow direction louver: Center

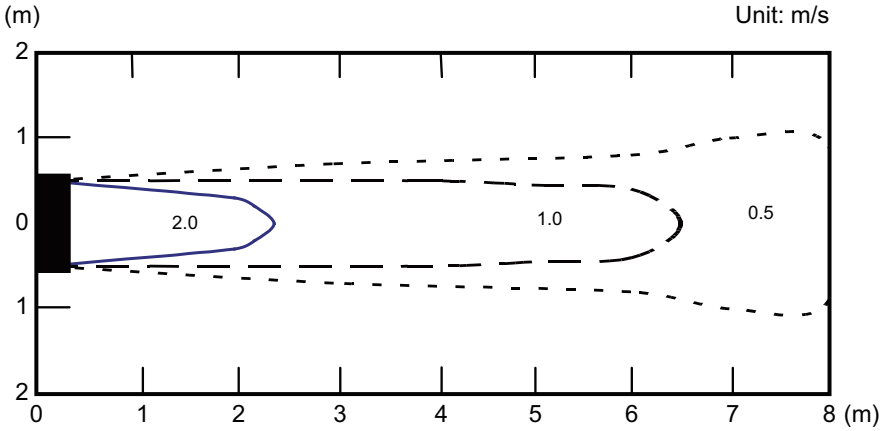

Top view
Vertical airflow direction louver: Up
Horizontal airflow direction louver: Left & Right

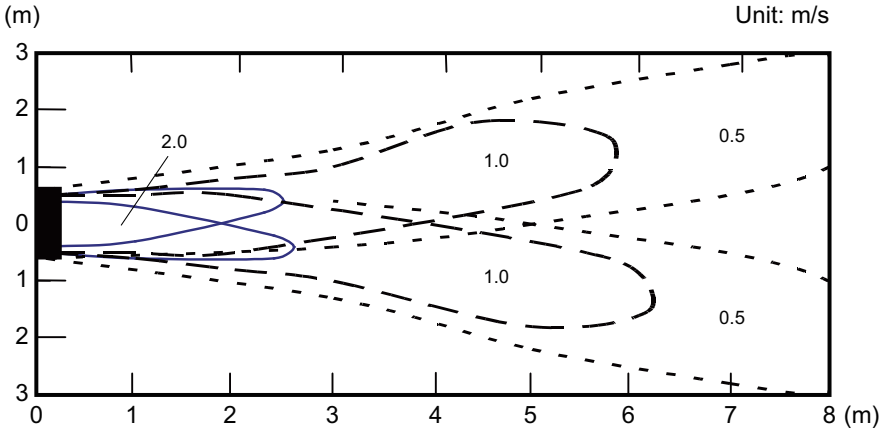

Side view
Vertical airflow direction louver: Up
Horizontal airflow direction louver: Center

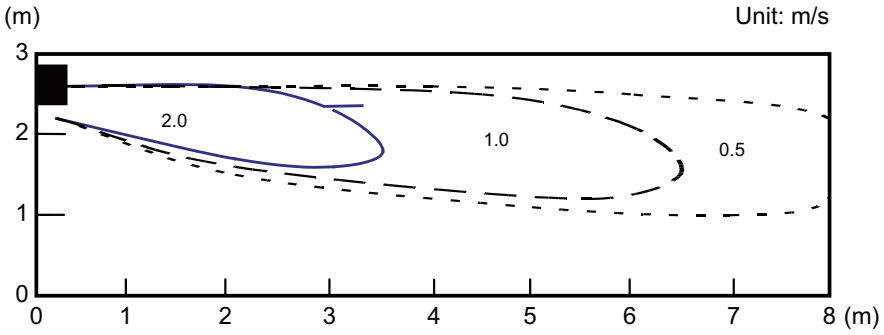

Side view
Vertical airflow direction louver: Down
Horizontal airflow direction louver: Center

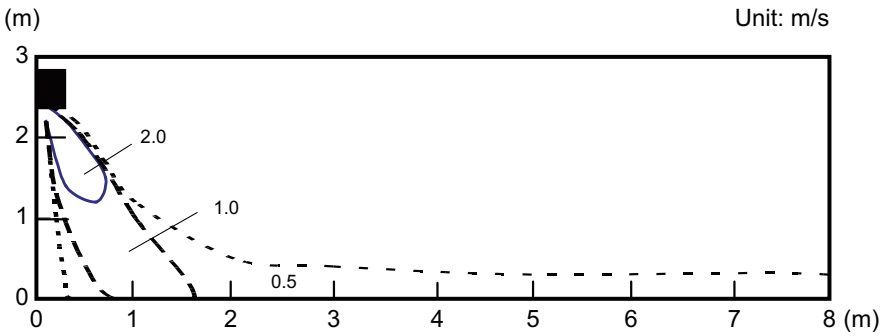

■ Model: AS∗A030GTEH

Measuring conditions	Fan speed	Operation mode
	HIGH	FAN

• Air velocity distribution

Top view
Vertical airflow direction louver: Up
Horizontal airflow direction louver: Center

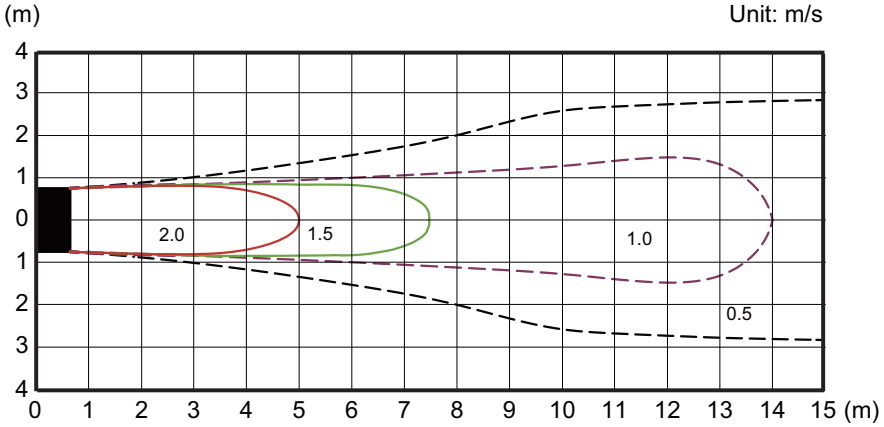

Top view
Vertical airflow direction louver: Up
Horizontal airflow direction louver: Left & Right

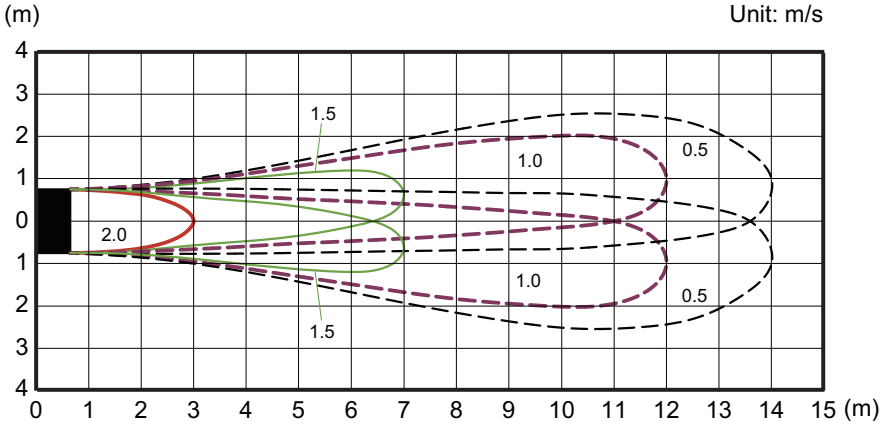

Side view
Vertical airflow direction louver: Up
Horizontal airflow direction louver: Center

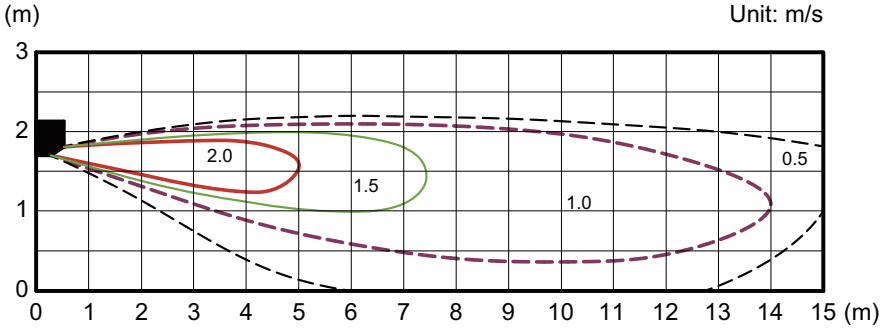

INDOOR UNITS

INDOOR UNITS

■ Model: AS∗A034GTEH

Measuring conditions	Fan speed	Operation mode
	HIGH	FAN

• Air velocity distribution

Top view
Vertical airflow direction louver: Up
Horizontal airflow direction louver: Center

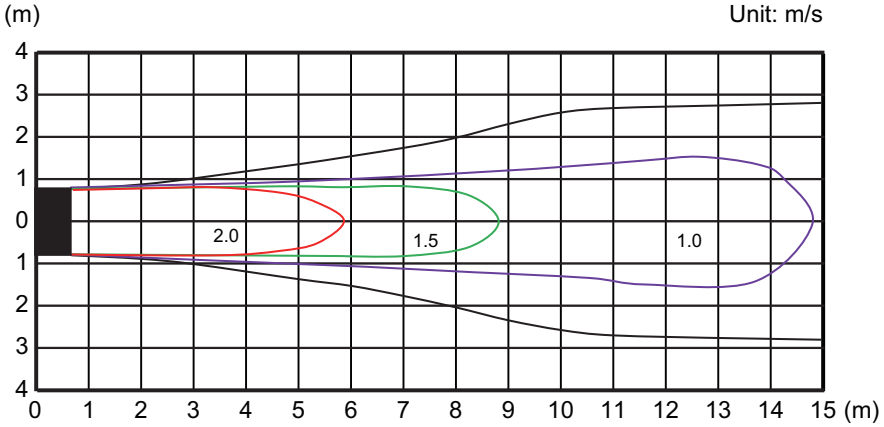

Top view
Vertical airflow direction louver: Up
Horizontal airflow direction louver: Left & Right

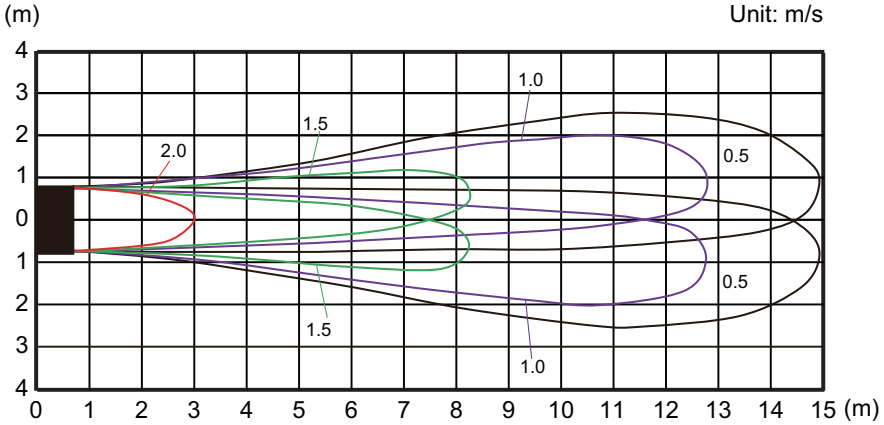

Side view
Vertical airflow direction louver: Up
Horizontal airflow direction louver: Center

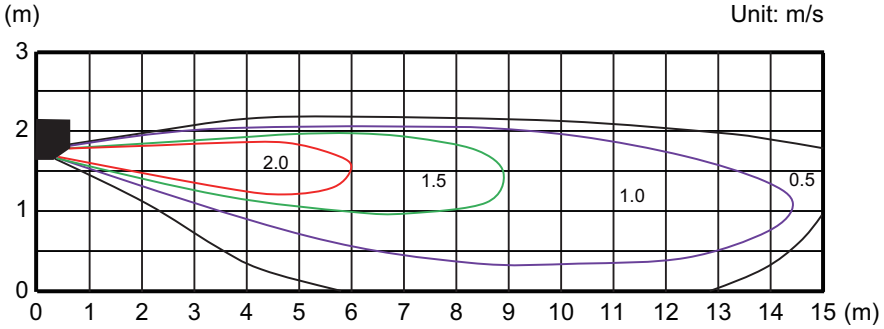

INDOOR UNITS

INDOOR UNITS

7. Fan performance curve

NOTE: Airflow and capacity/outlet temperature curve data are measured based on the same conditions mentioned in "Specifications" on page 04-4.

7-1. Low static pressure duct (Mini duct) type

■ Model: ARXK004GLGH

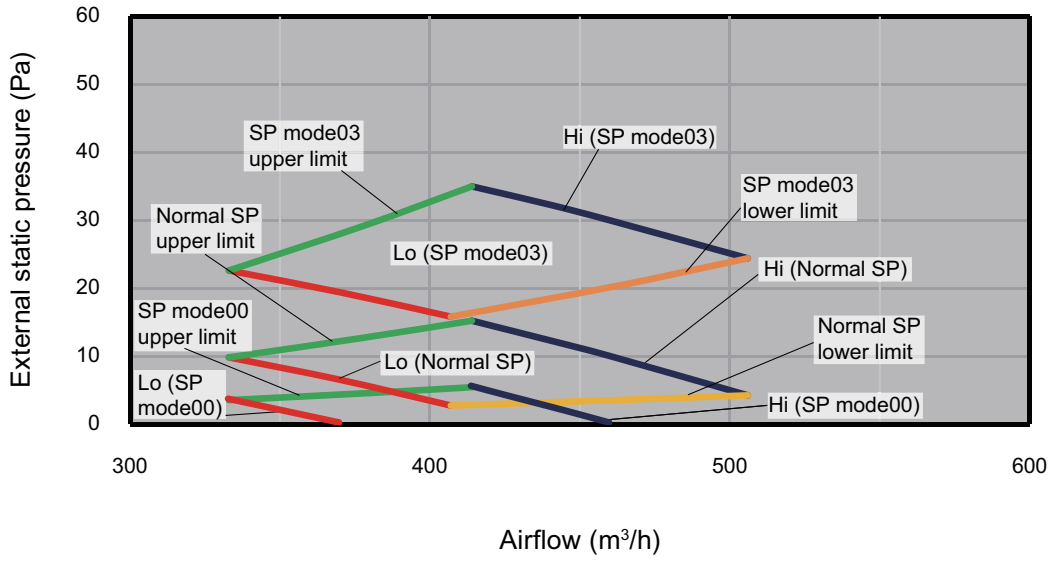

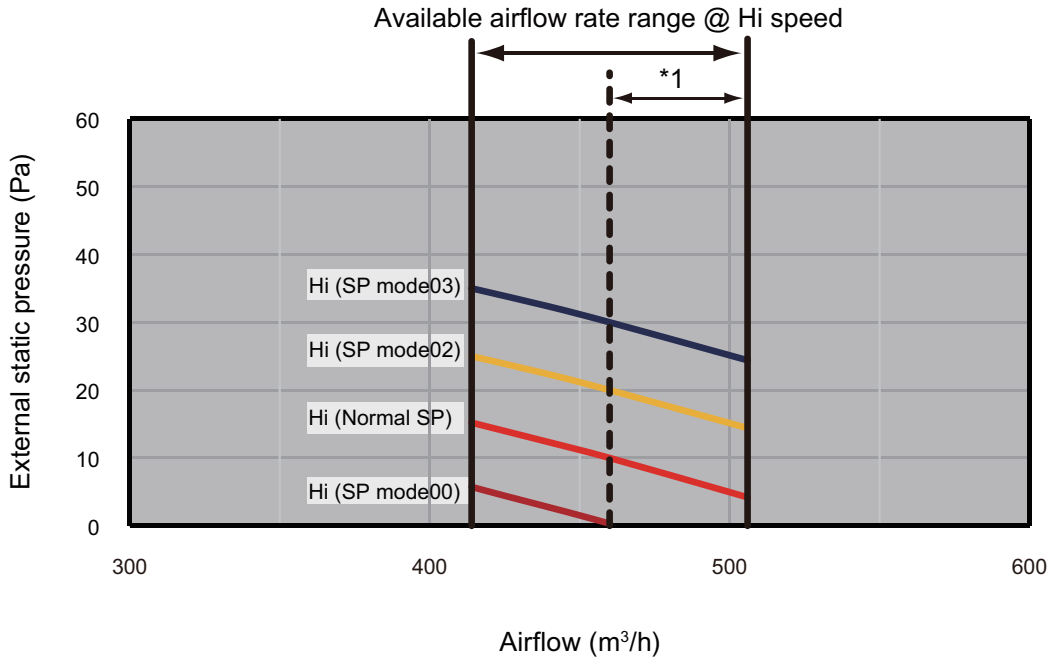

*1: Available airflow rate range when Auto louver grille kit (option) is installed.

- Fan speed: HIGH
- Vertical airflow direction louver: Up

Cooling

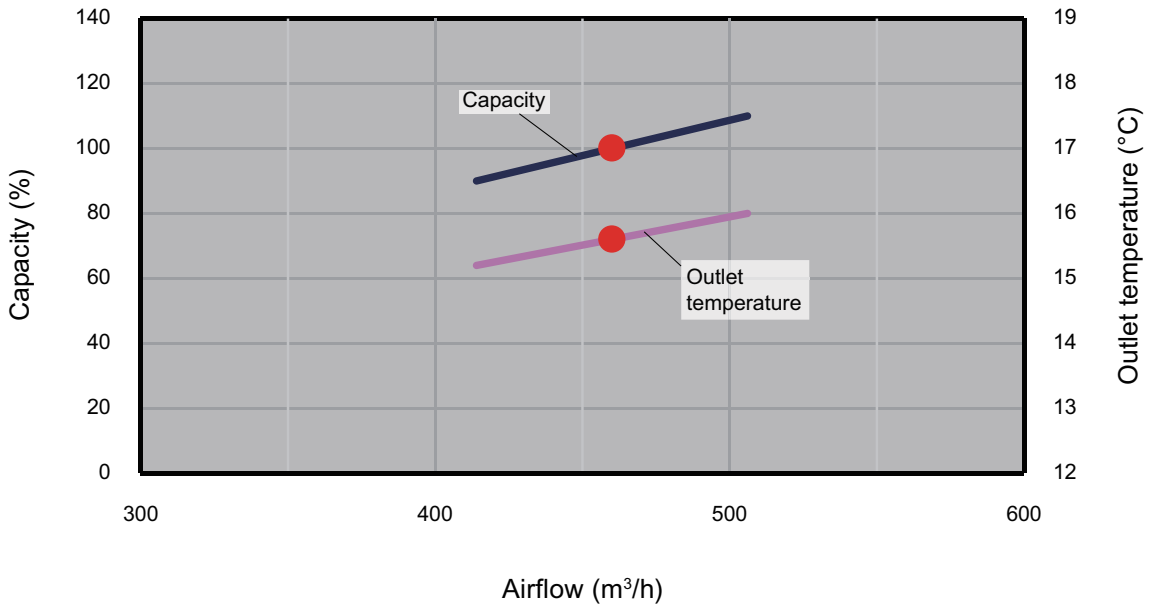

Heating

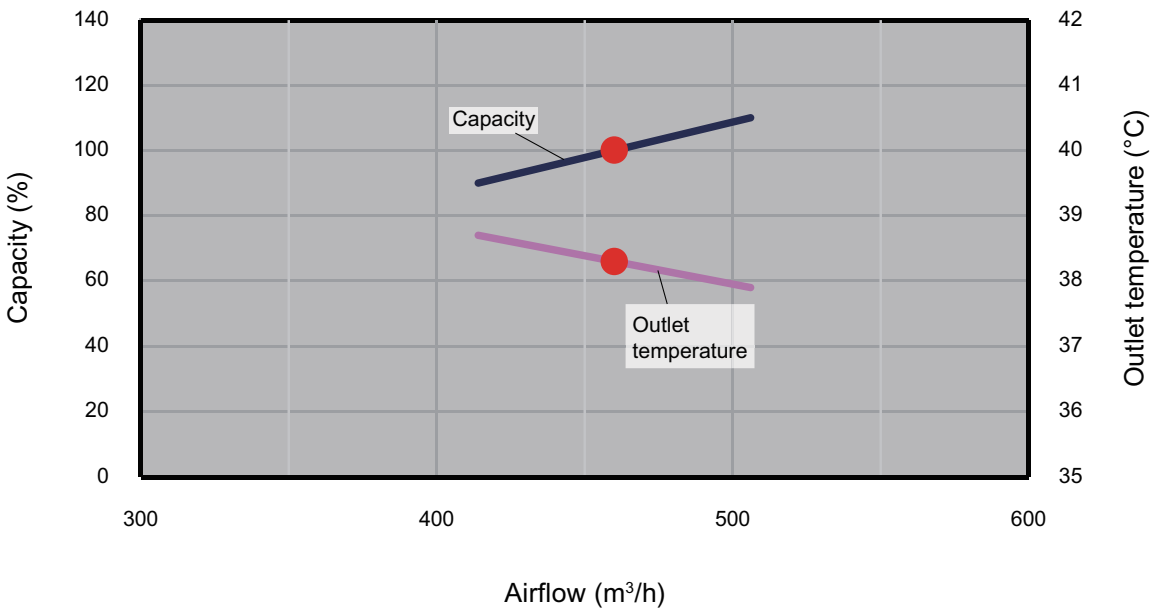

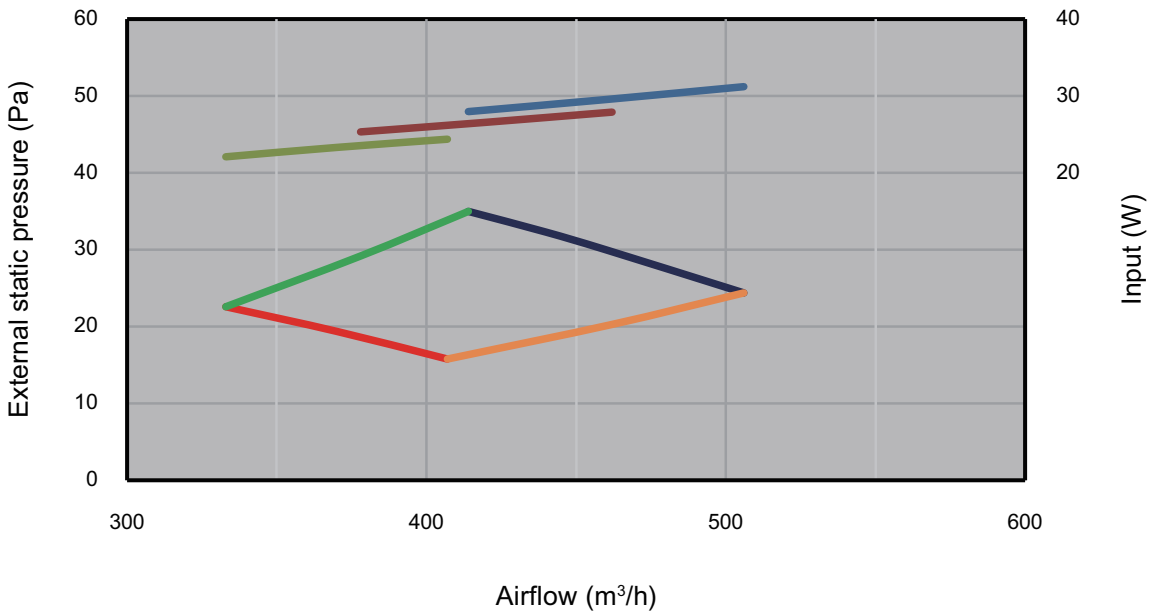

■ Model: ARXK007GLGH

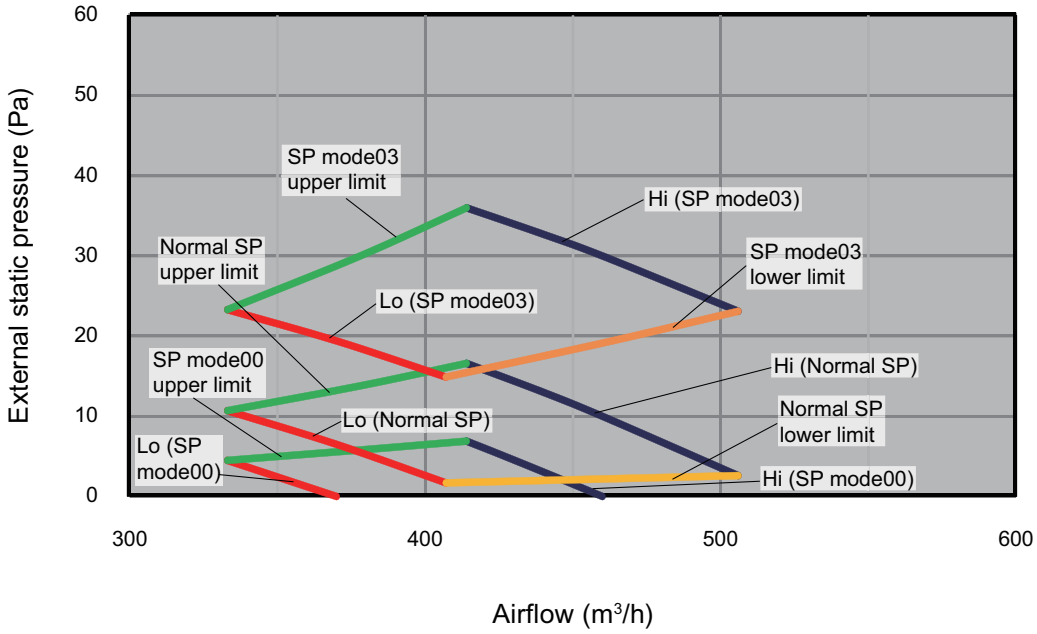

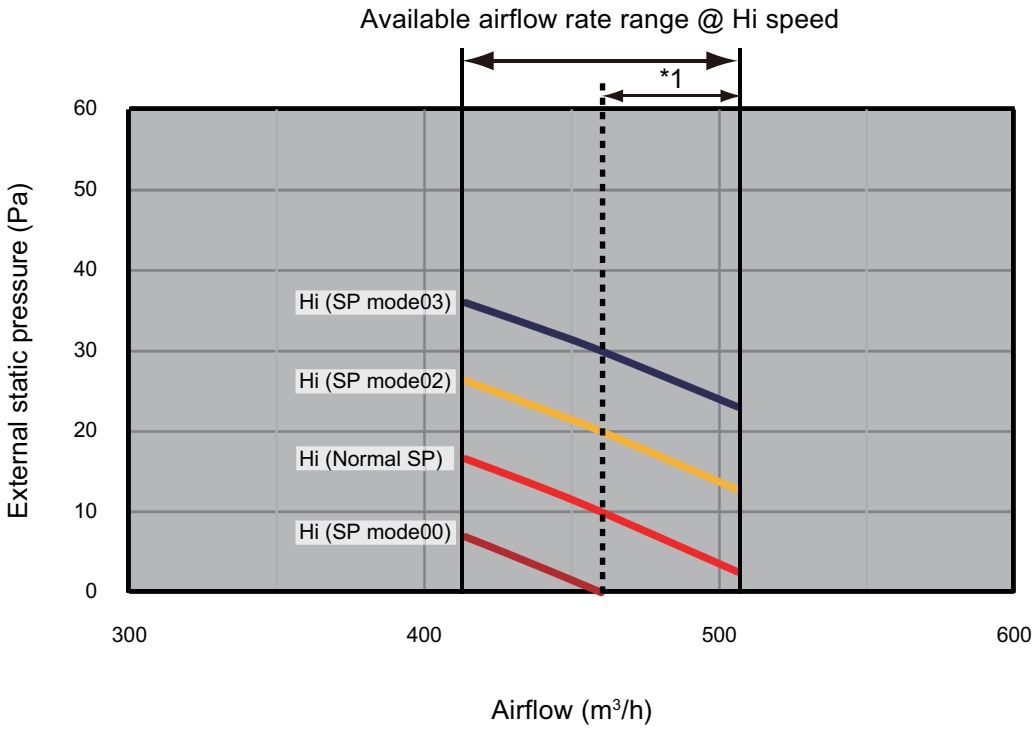

*1: Available airflow rate range when Auto louver grille kit (option) is installed.

- Fan speed: HIGH
- Vertical airflow direction louver: Up

INDOOR UNITS

Cooling

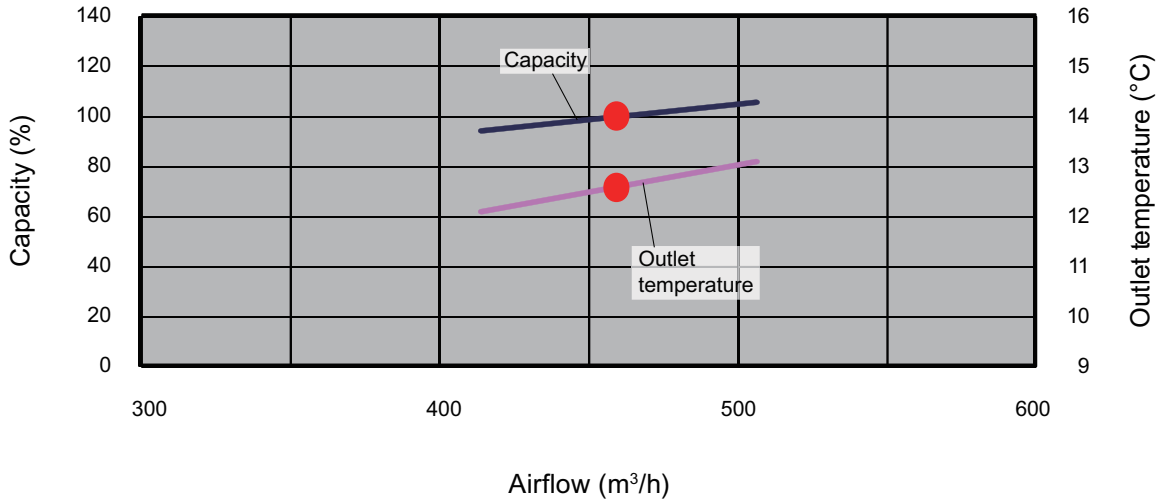

Heating

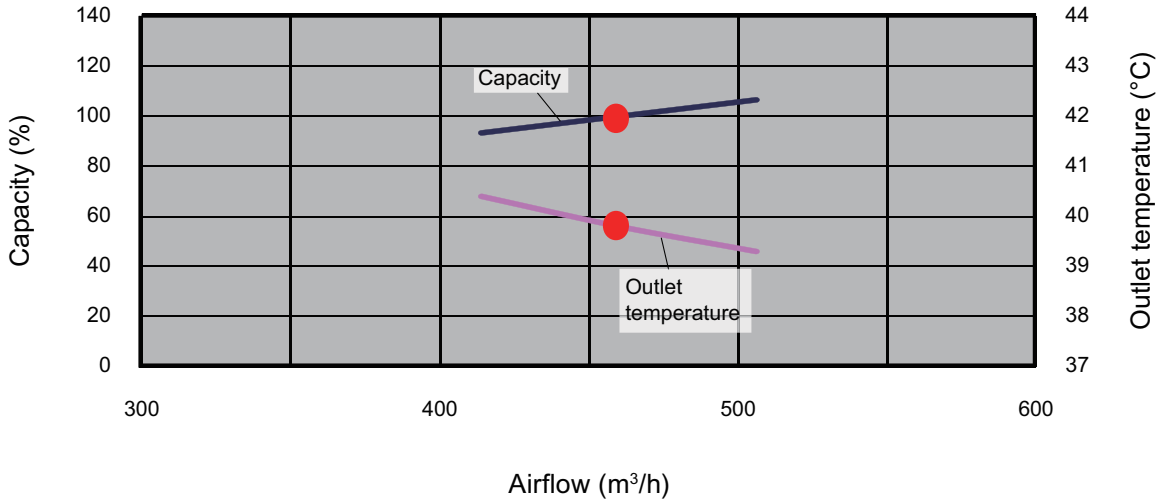

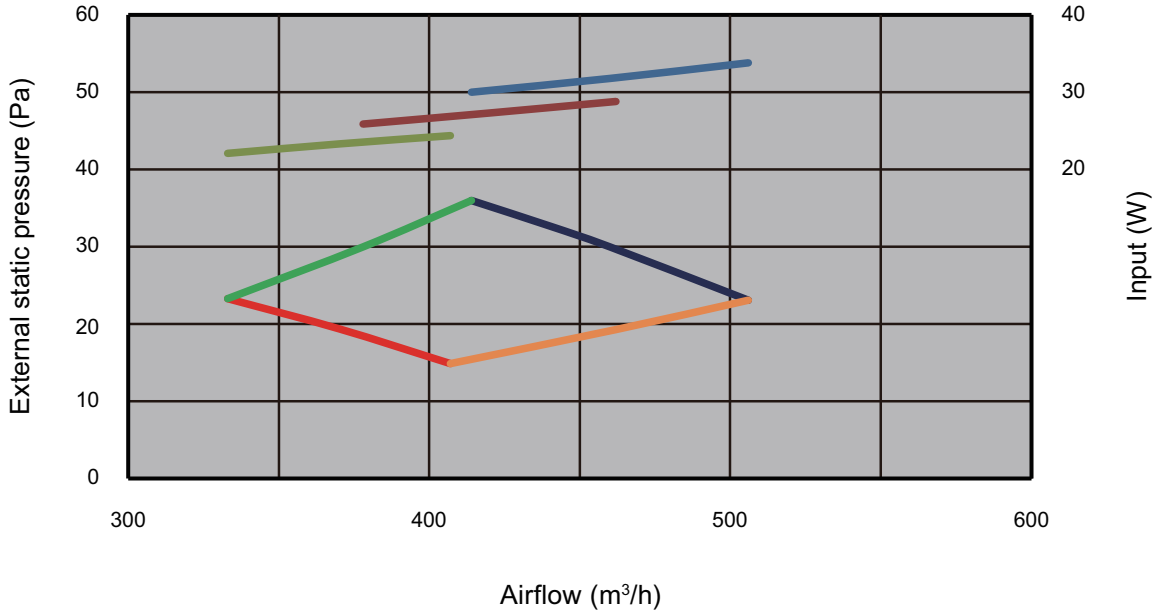

INDOOR UNITS

INDOOR UNITS

■ Model: ARXK009GLGH

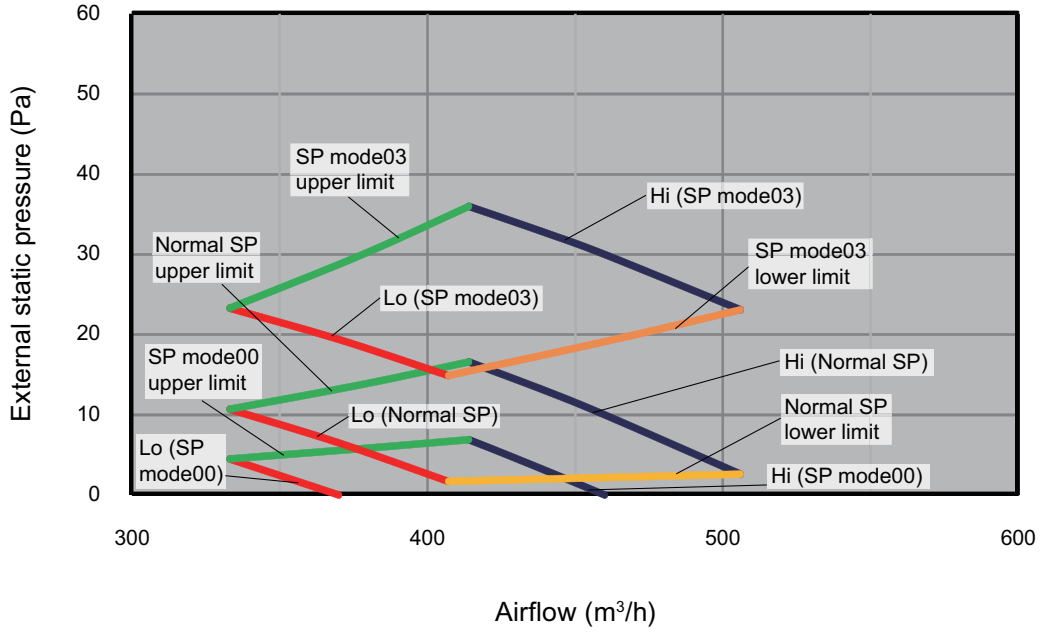

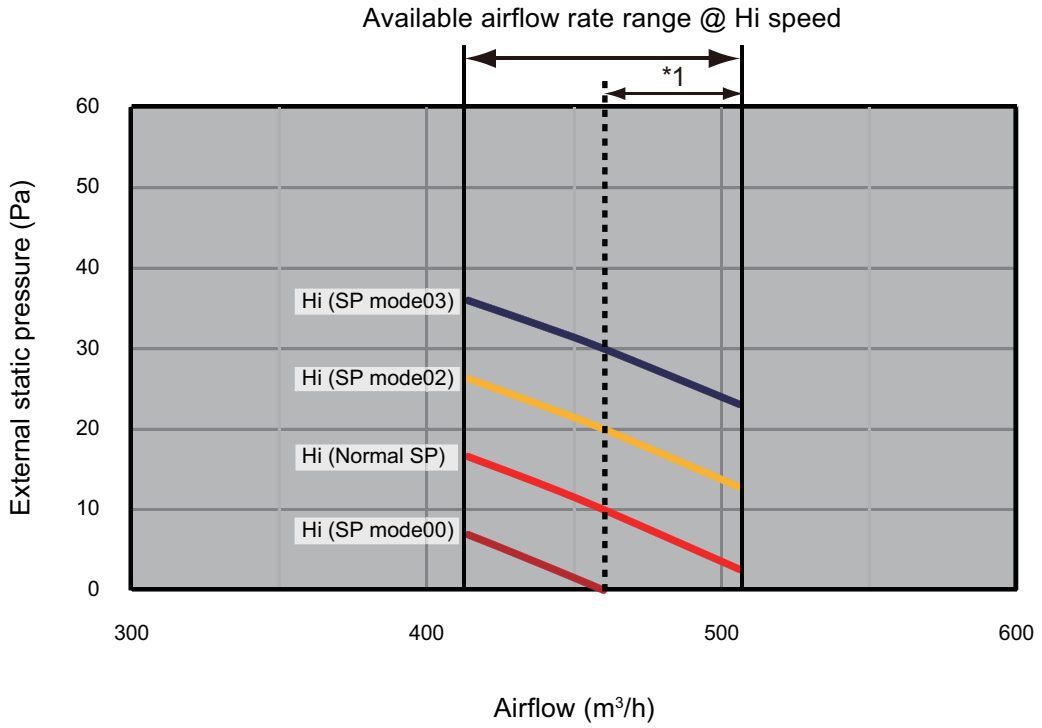

*1: Available airflow rate range when Auto louver grille kit (option) is installed.

- Fan speed: HIGH
- Vertical airflow direction louver: Up

INDOOR UNITS

Cooling

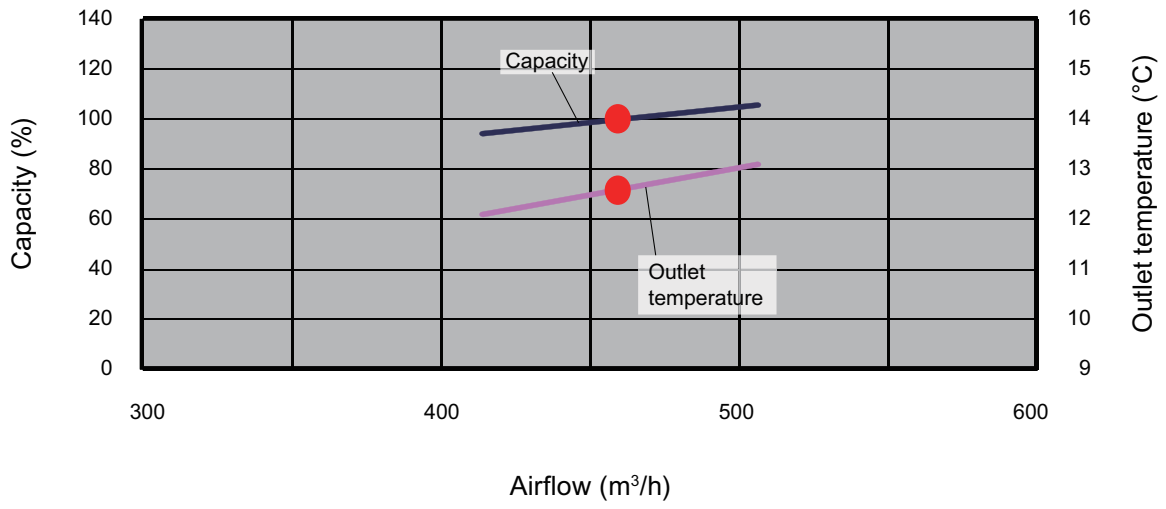

Heating

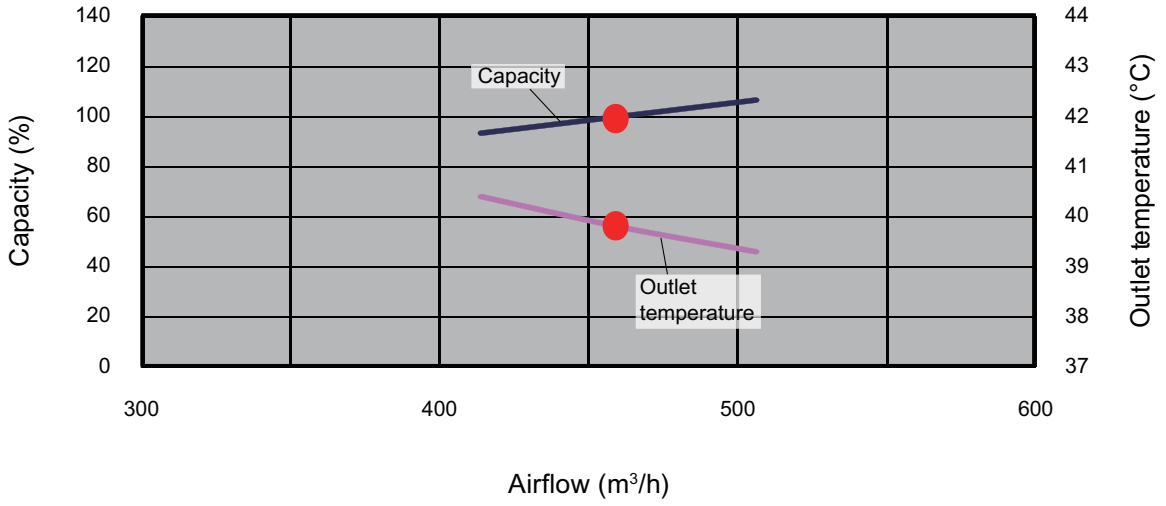

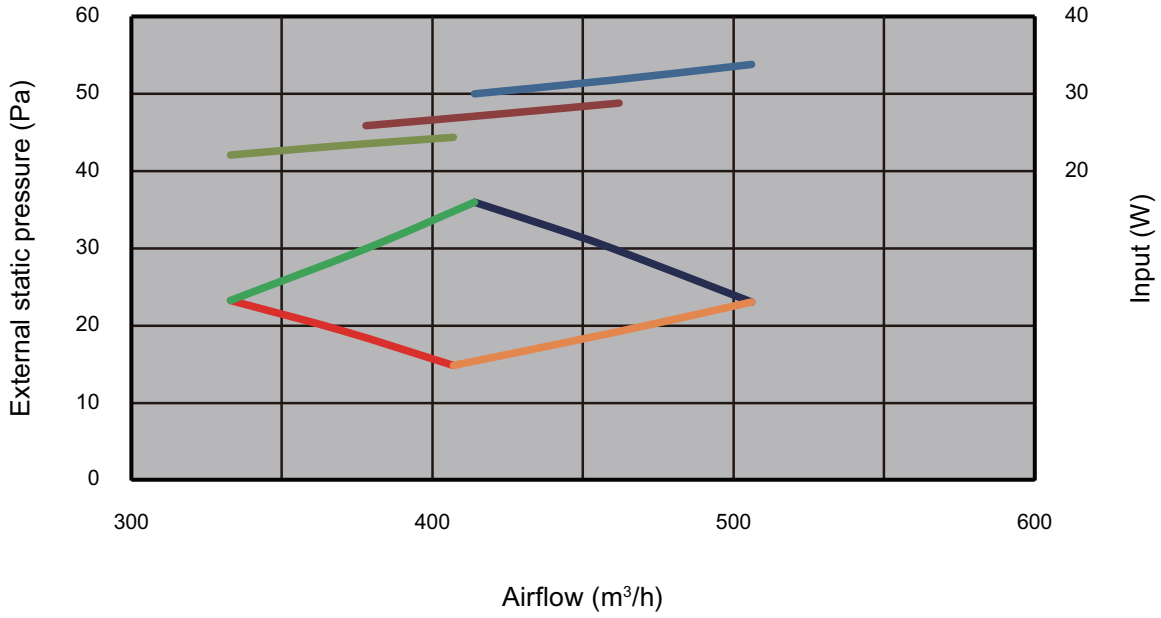

■ Model: ARXK012GLGH

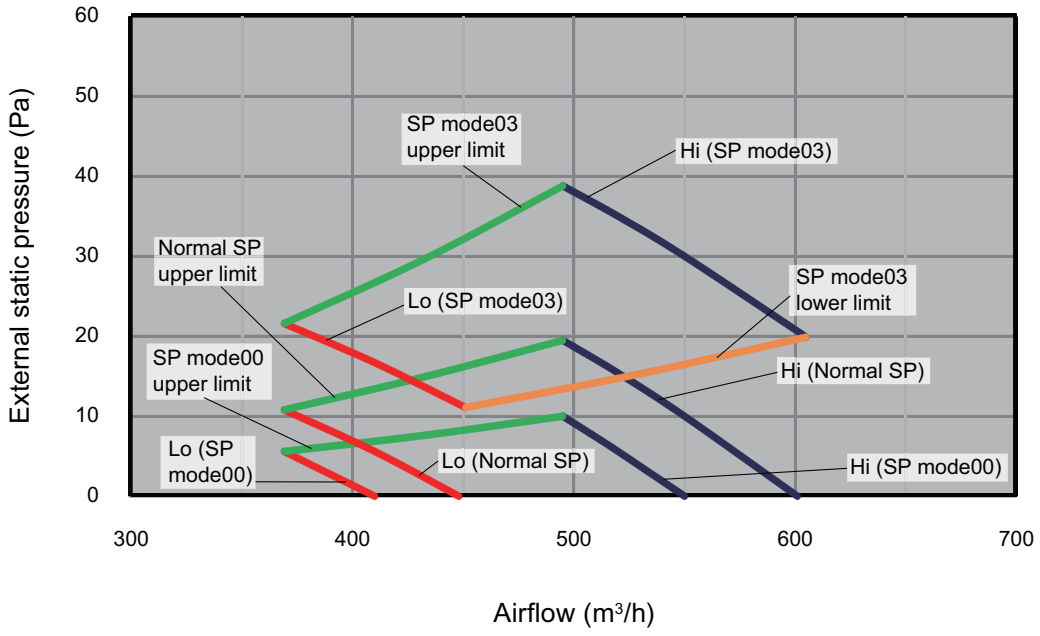

Available airflow rate range @ Hi speed

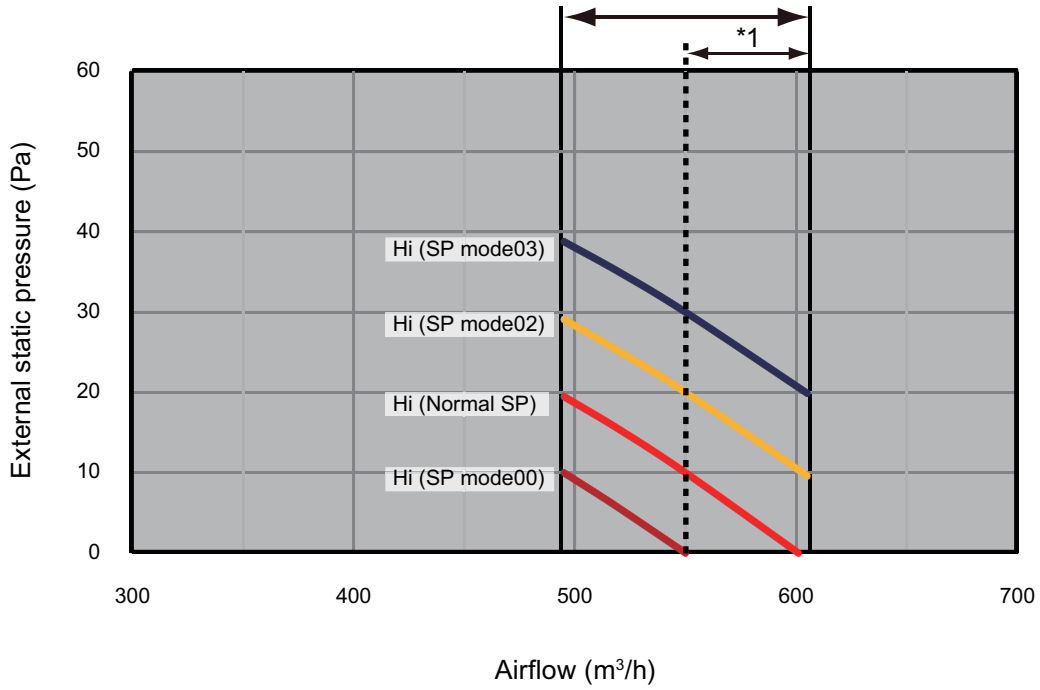

*1: Available airflow rate range when Auto louver grille kit (option) is installed.

- Fan speed: HIGH
- Vertical airflow direction louver: Up

INDOOR UNITS

INDOOR UNITS

Cooling

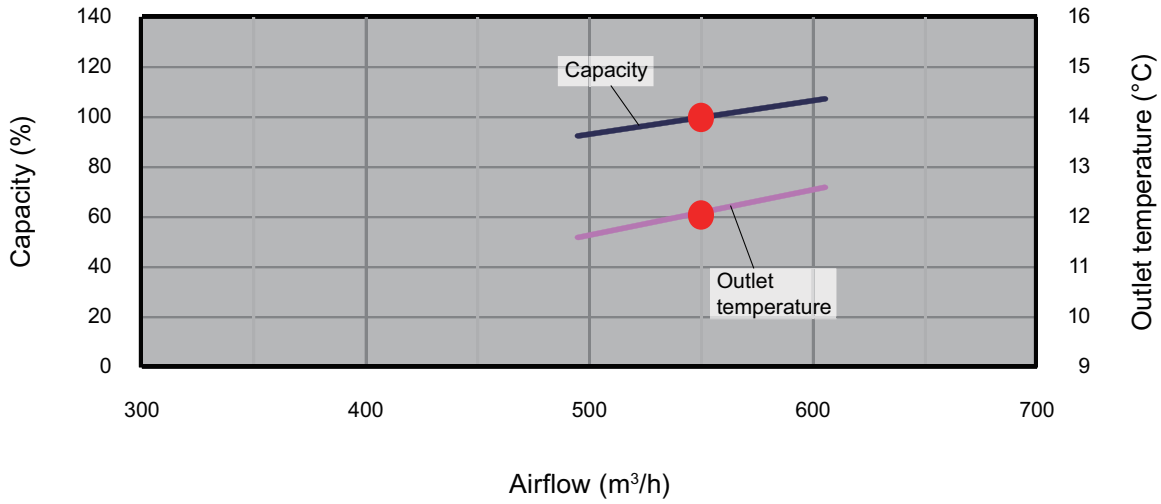

Heating

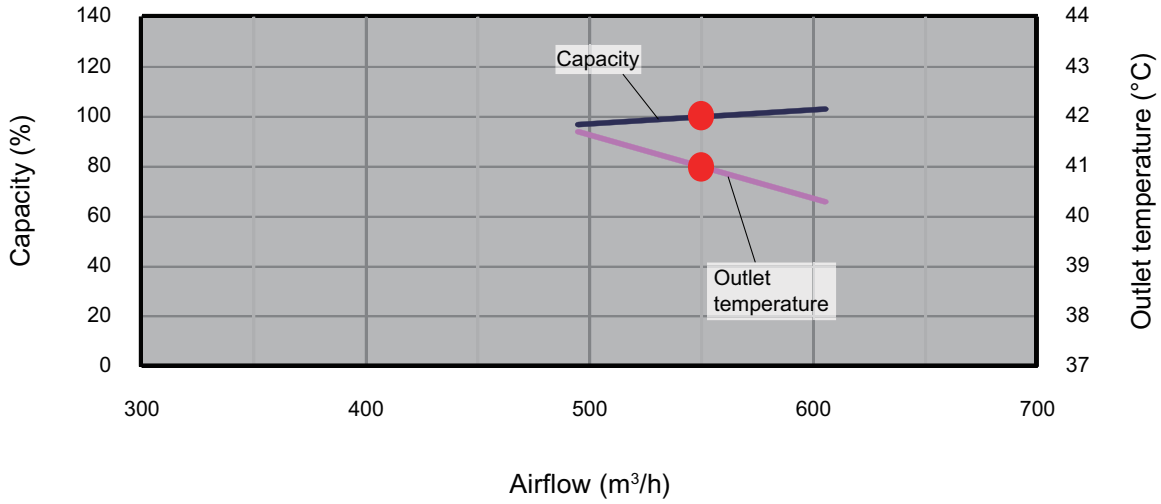

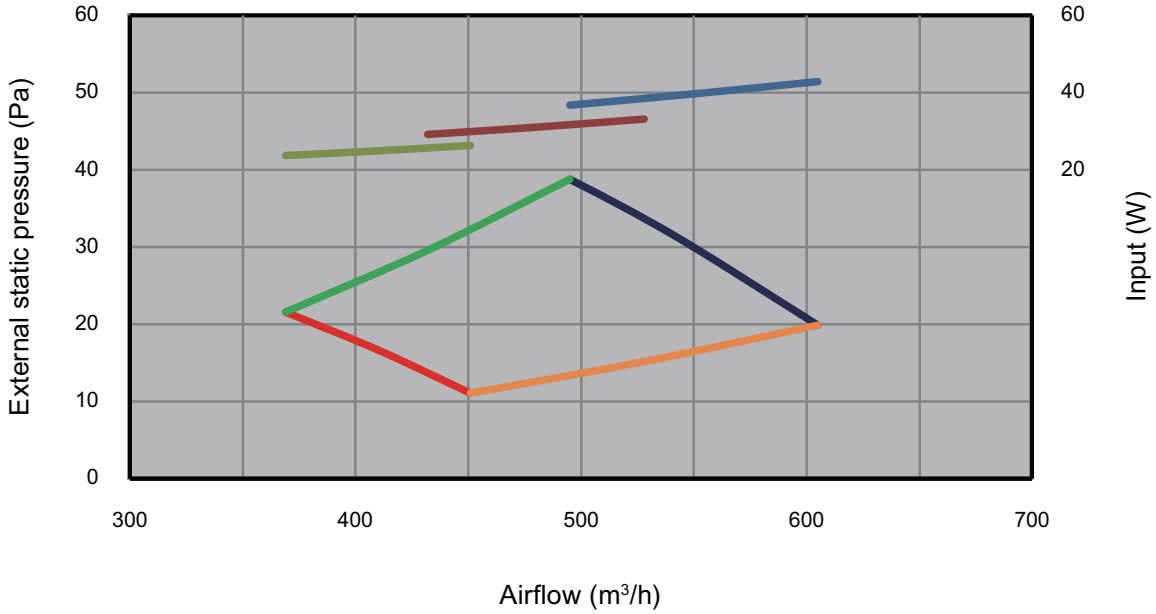

■ Model: ARXK014GLGH

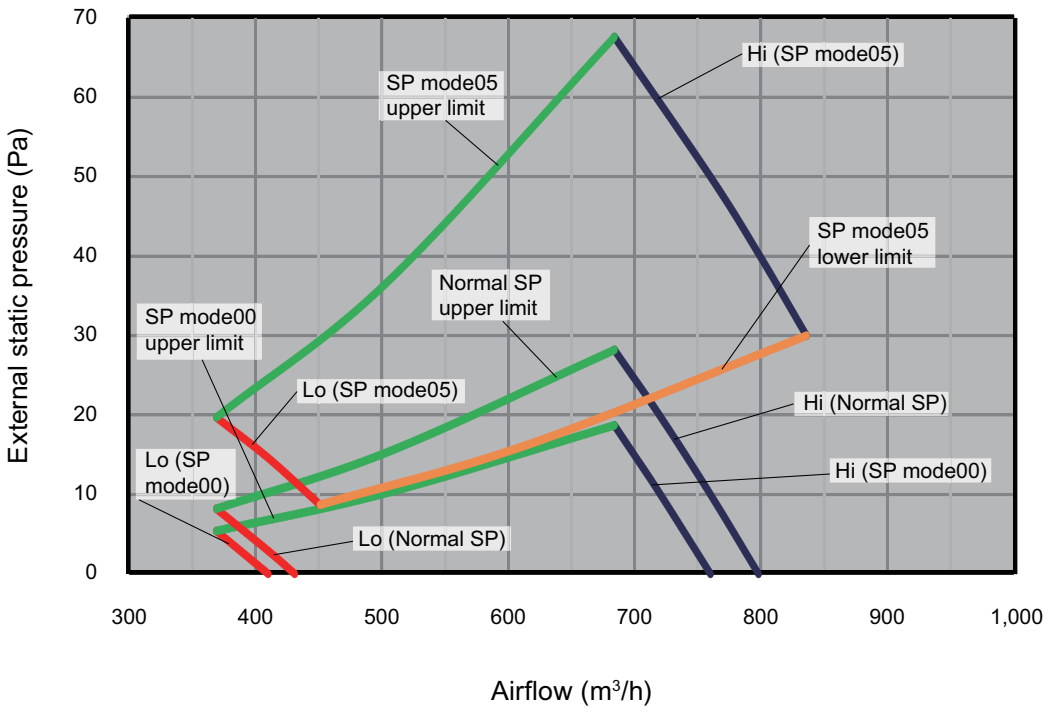

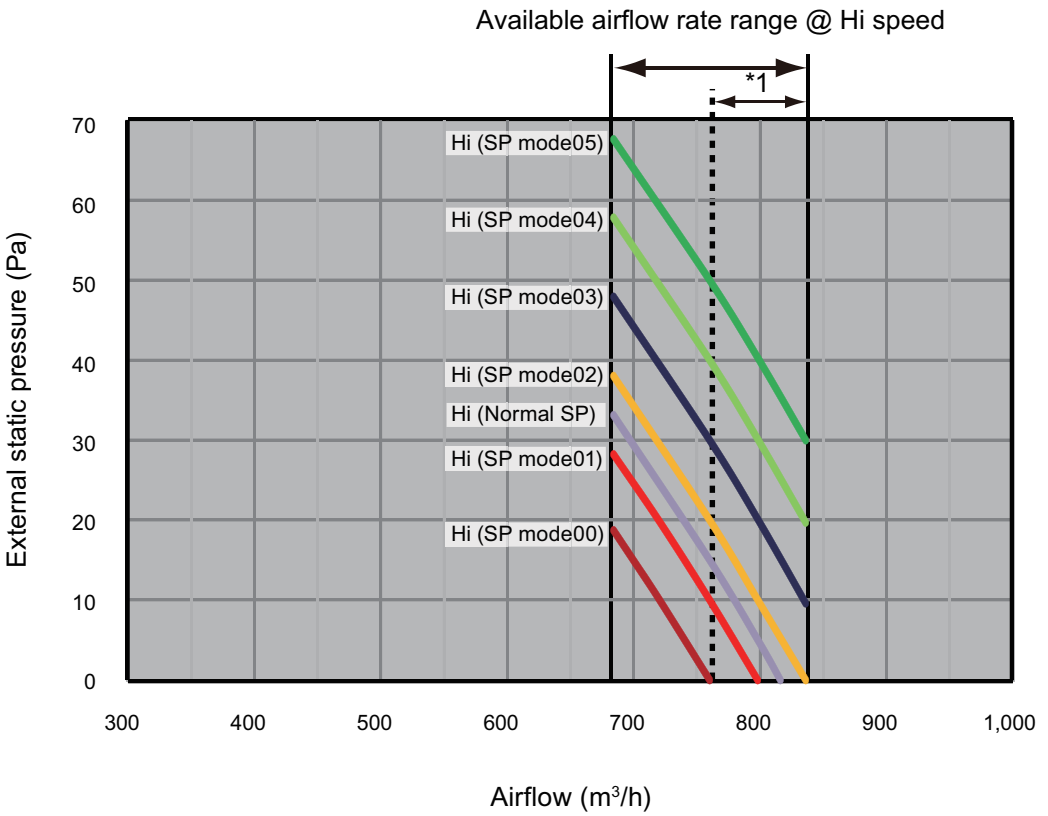

*1: Available airflow rate range when Auto louver grille kit (option) is installed.

- Fan speed: HIGH
- Vertical airflow direction louver: Up

INDOOR UNITS

Cooling

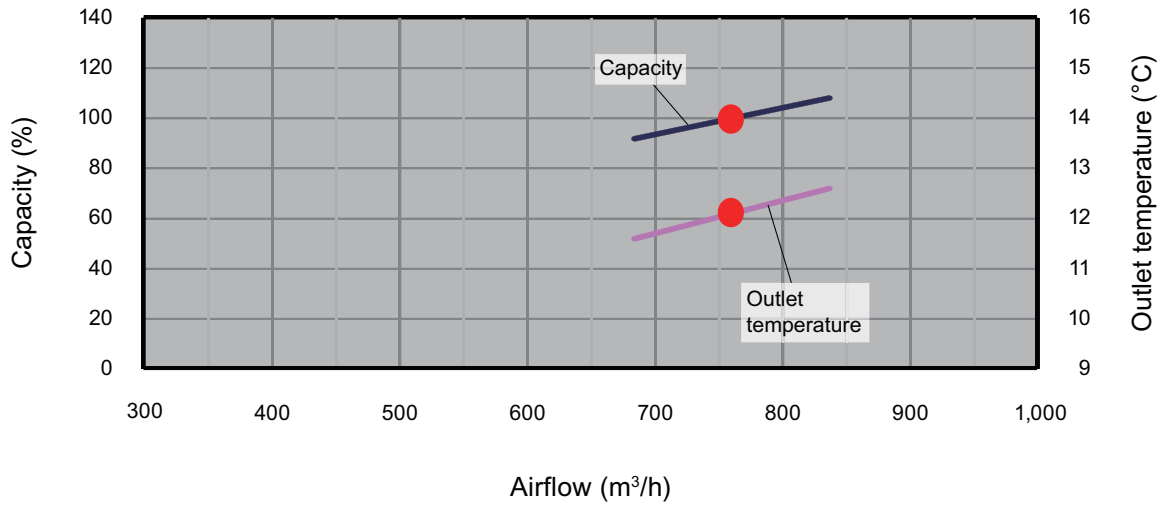

Heating

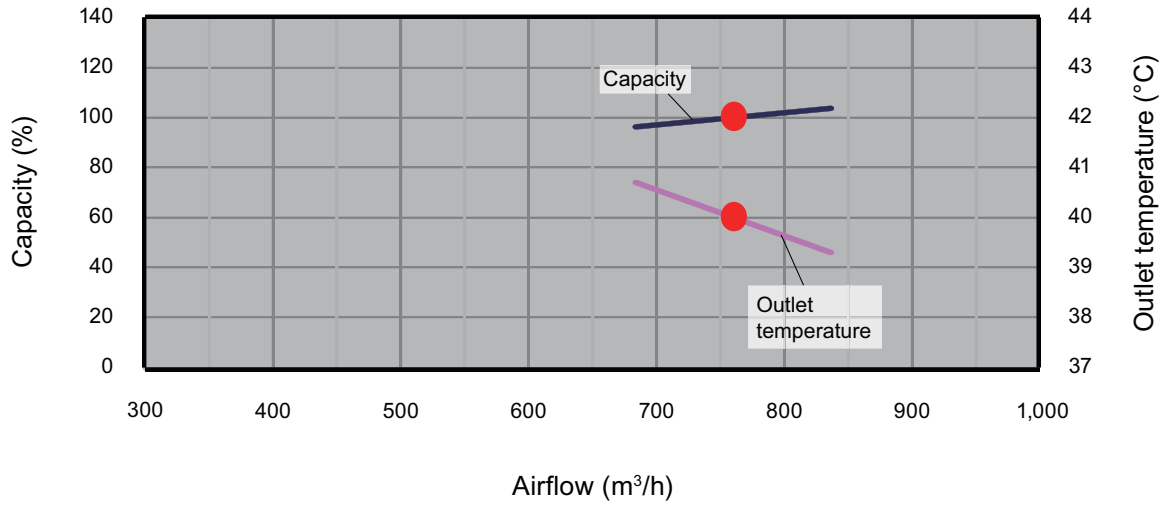

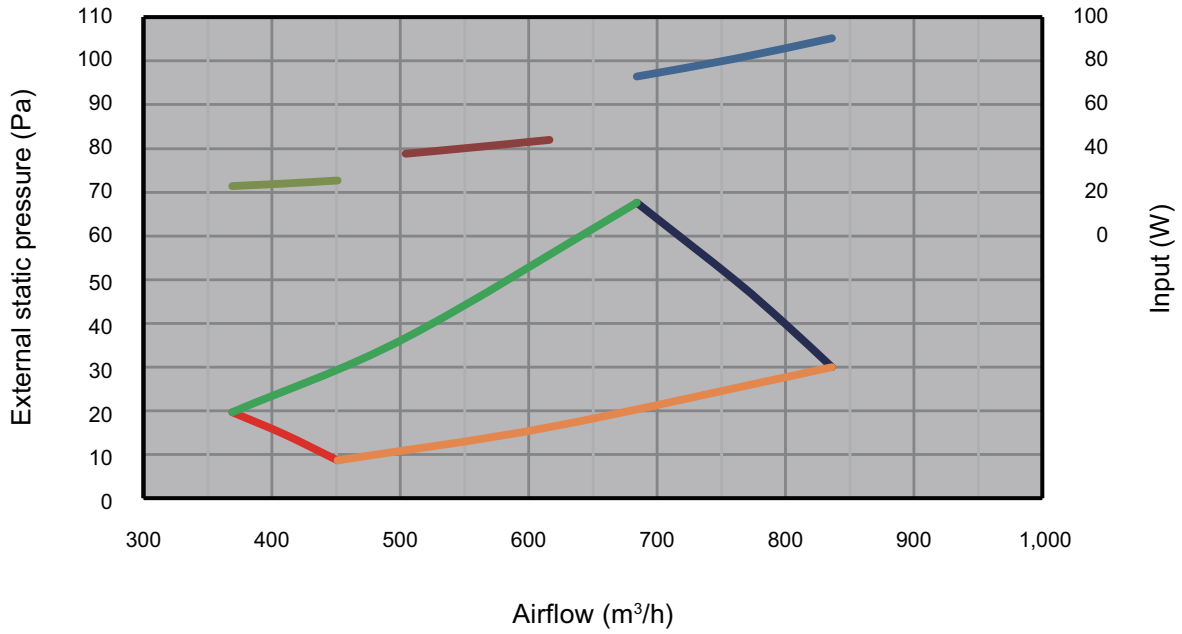

■ Model: ARXK018GLGH

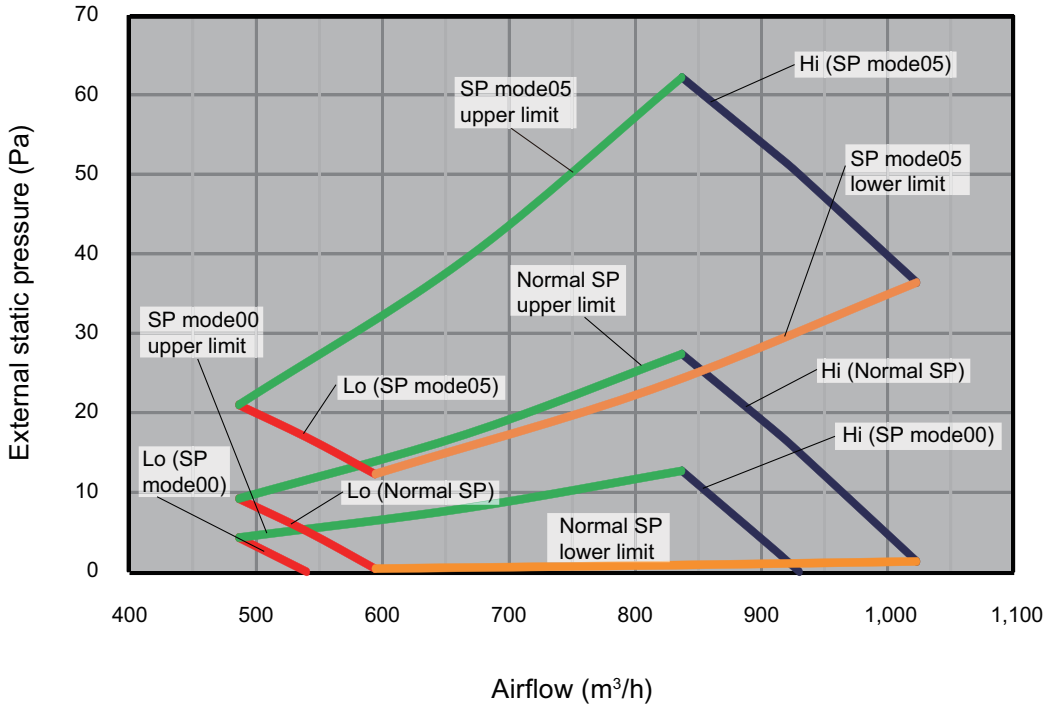

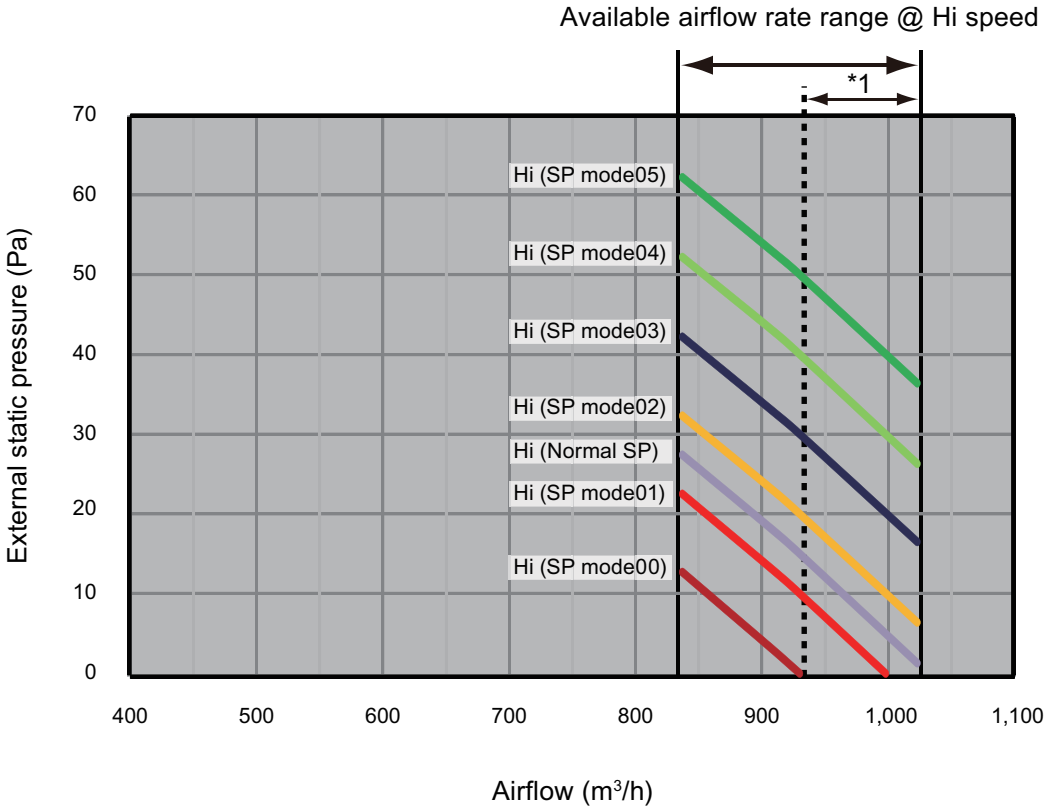

*1: Available airflow rate range when Auto louver grille kit (option) is installed.

- Fan speed: HIGH
- Vertical airflow direction louver: Up

INDOOR UNITS

Cooling

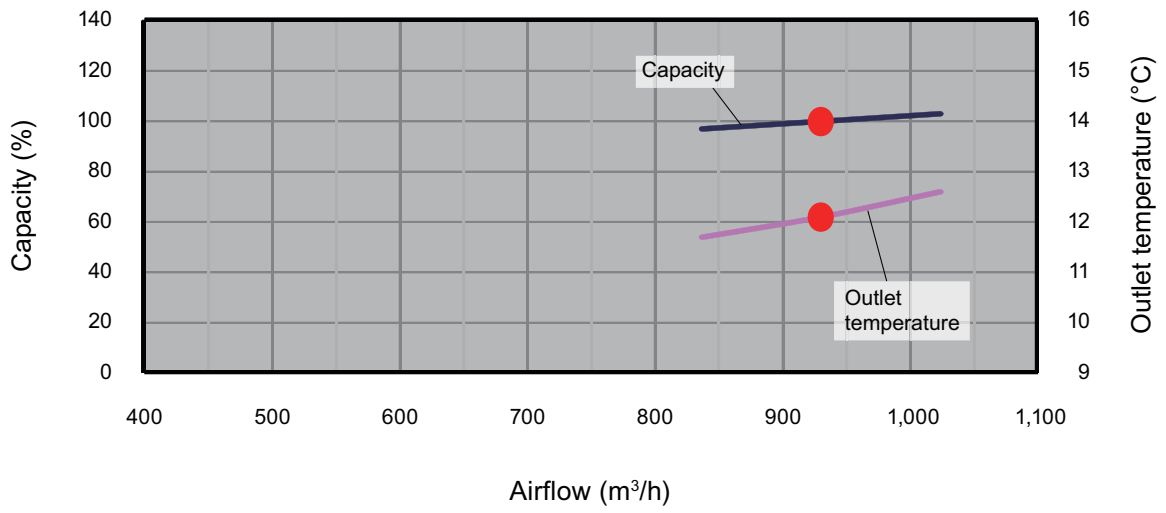

Heating

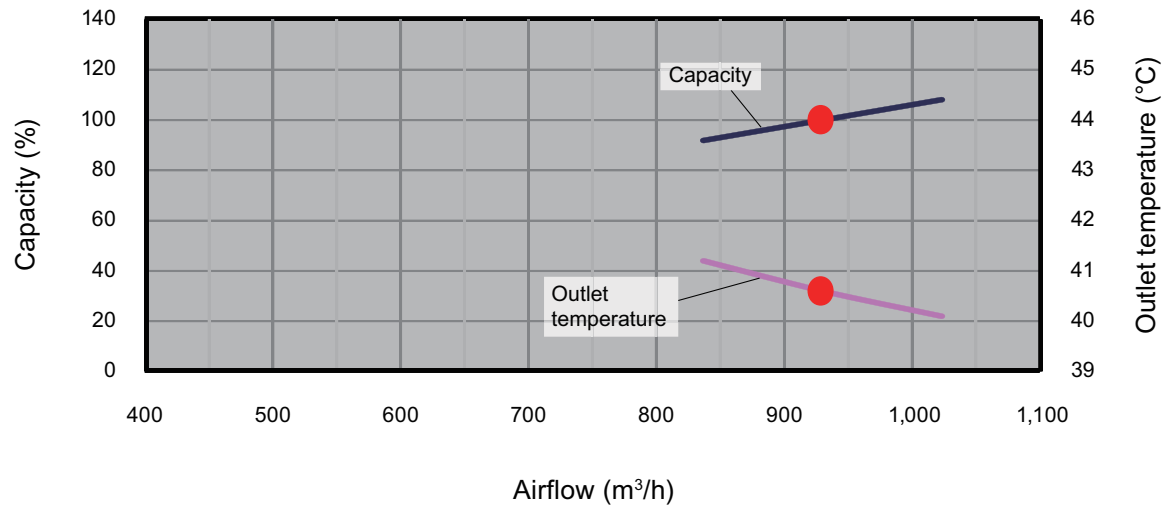

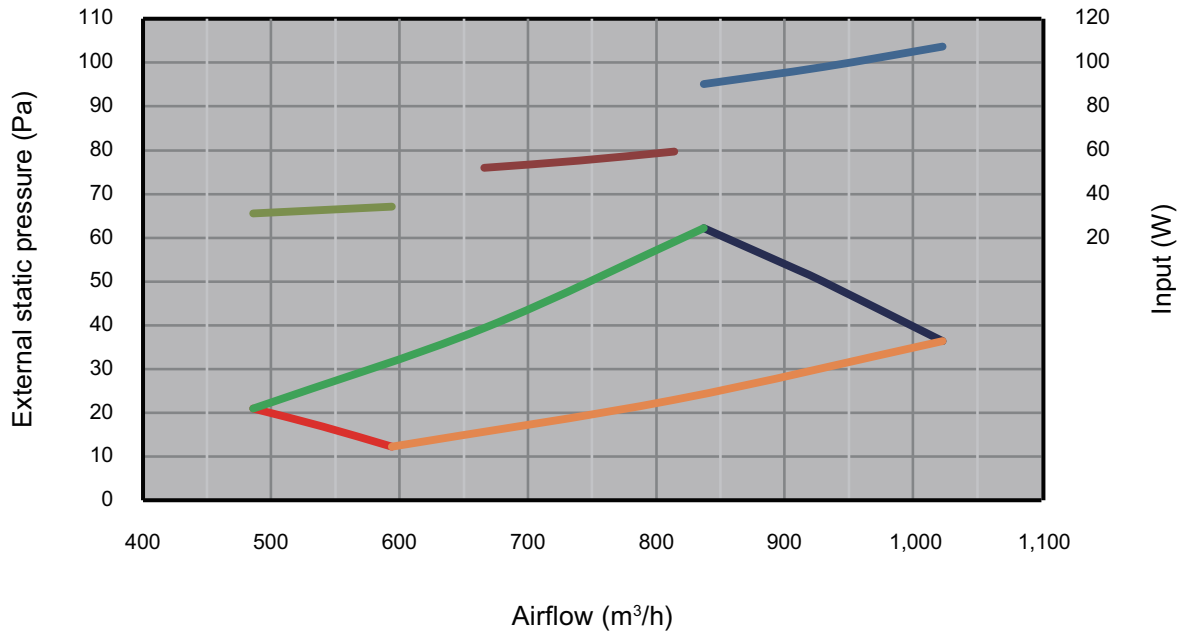

■ Model: ARXK024GLGH

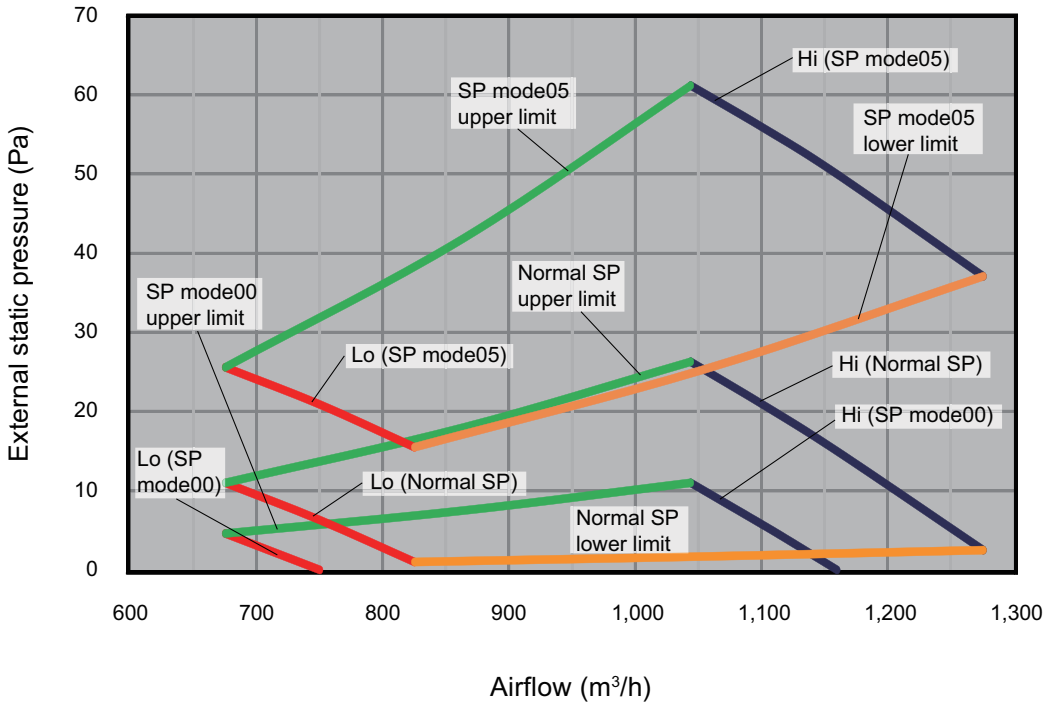

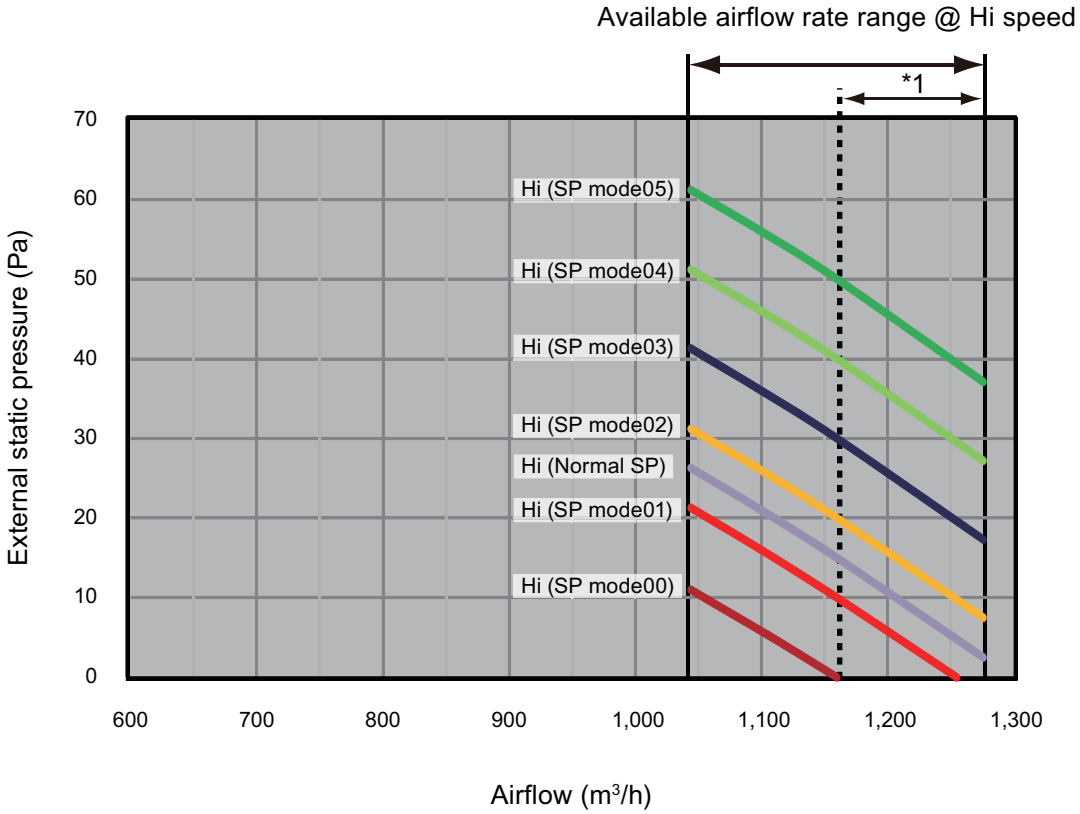

*1: Available airflow rate range when Auto louver grille kit (option) is installed.

- Fan speed: HIGH
- Vertical airflow direction louver: Up

INDOOR UNITS

Cooling

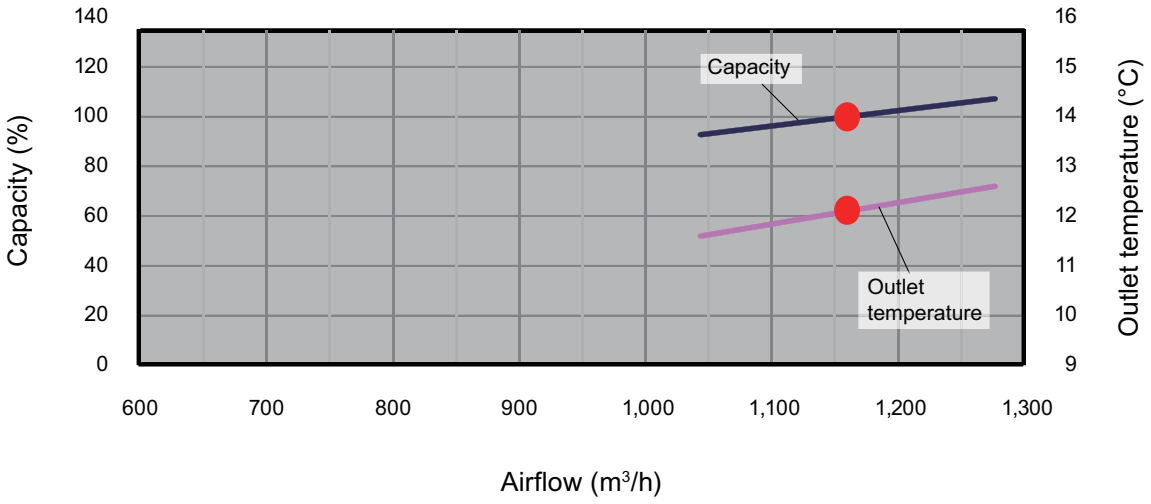

Heating

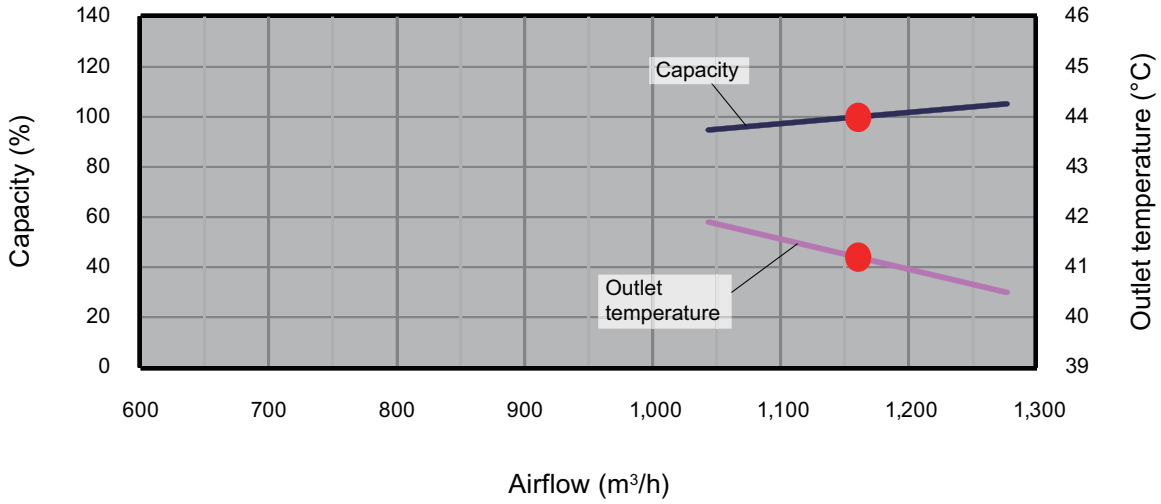

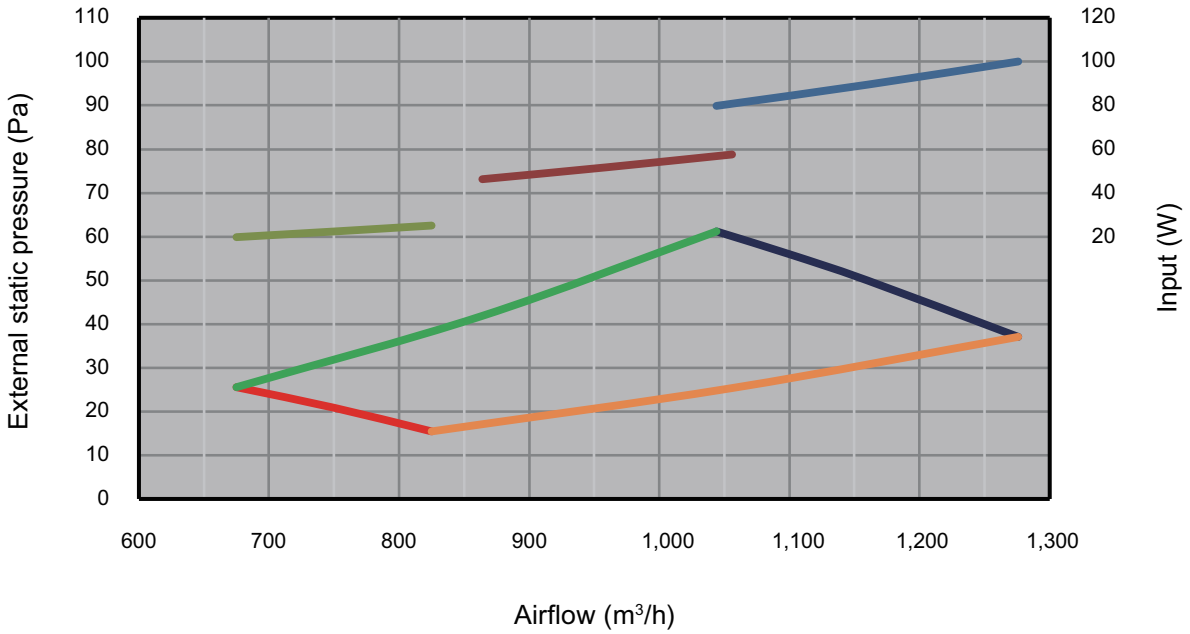

7-2. Low static pressure duct (Slim duct)/Slim concealed floor type

■ Model: ARXD007GLEH

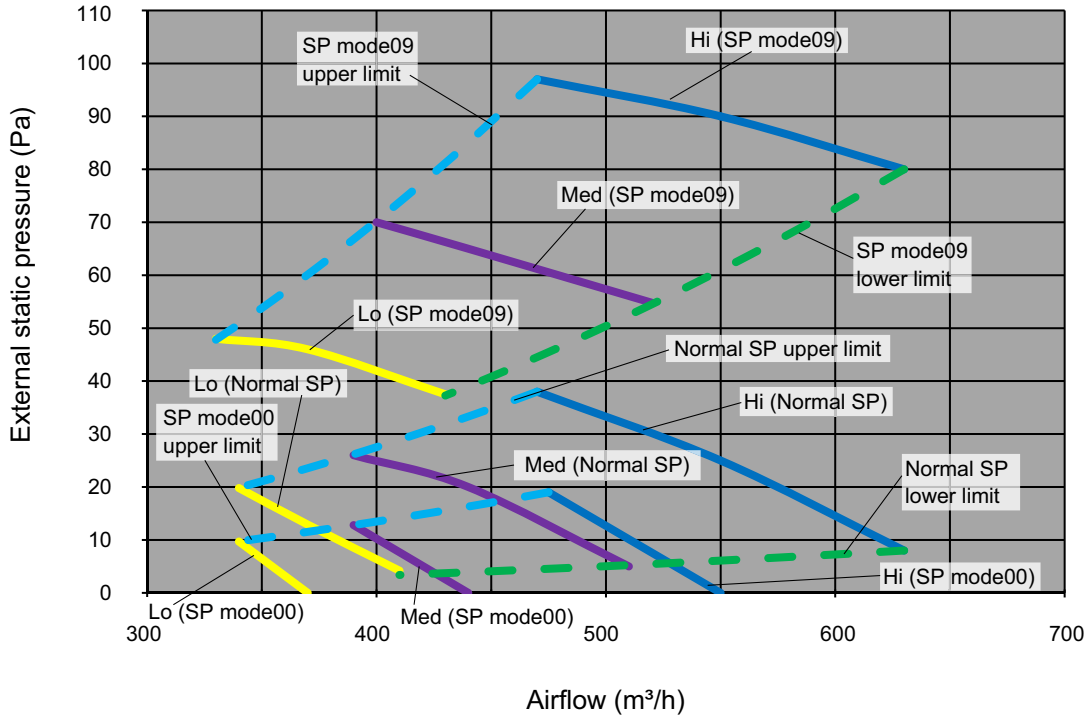

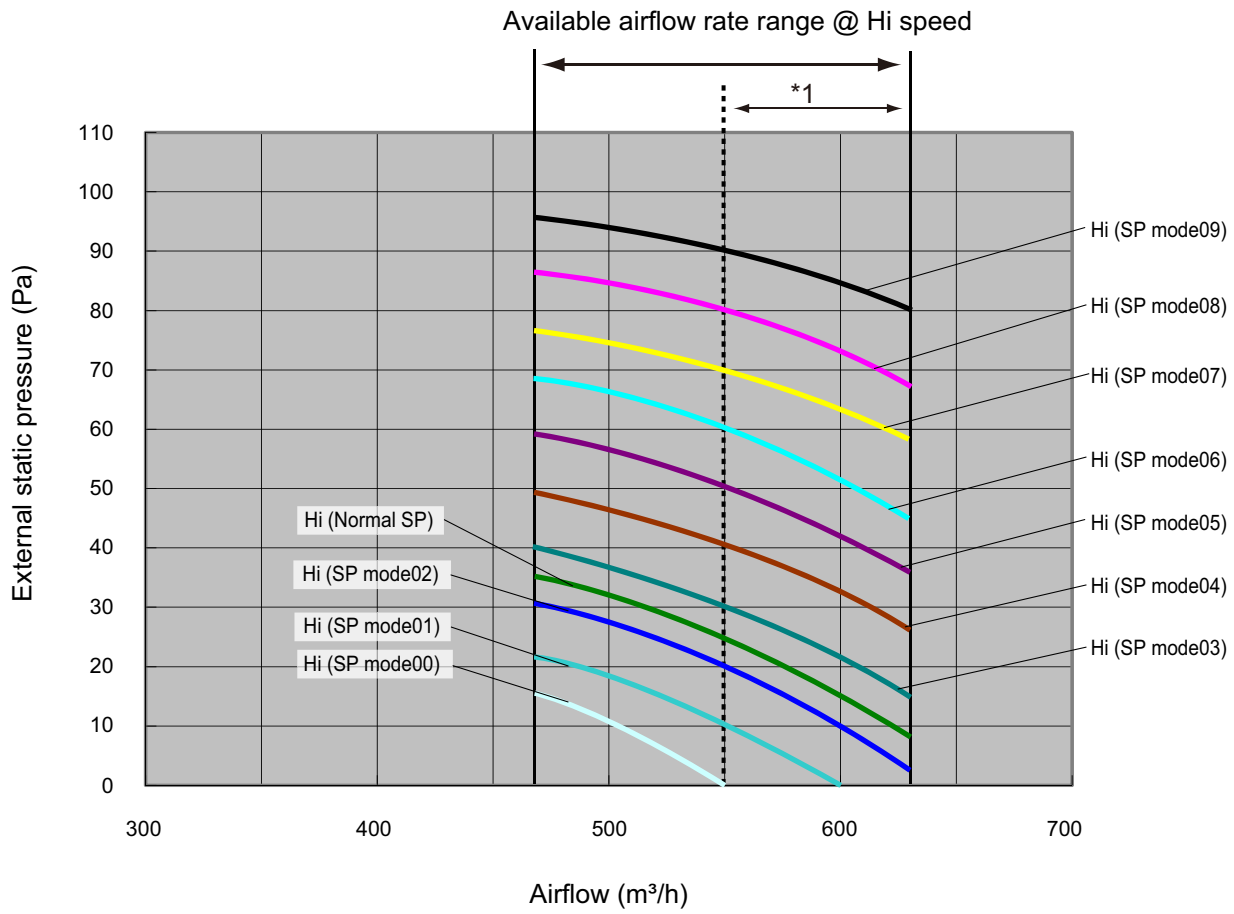

*1: Available airflow rate range when Auto louver grille kit (option) is installed.

- Fan speed: HIGH
- Vertical airflow direction louver: Up

INDOOR UNITS

Cooling

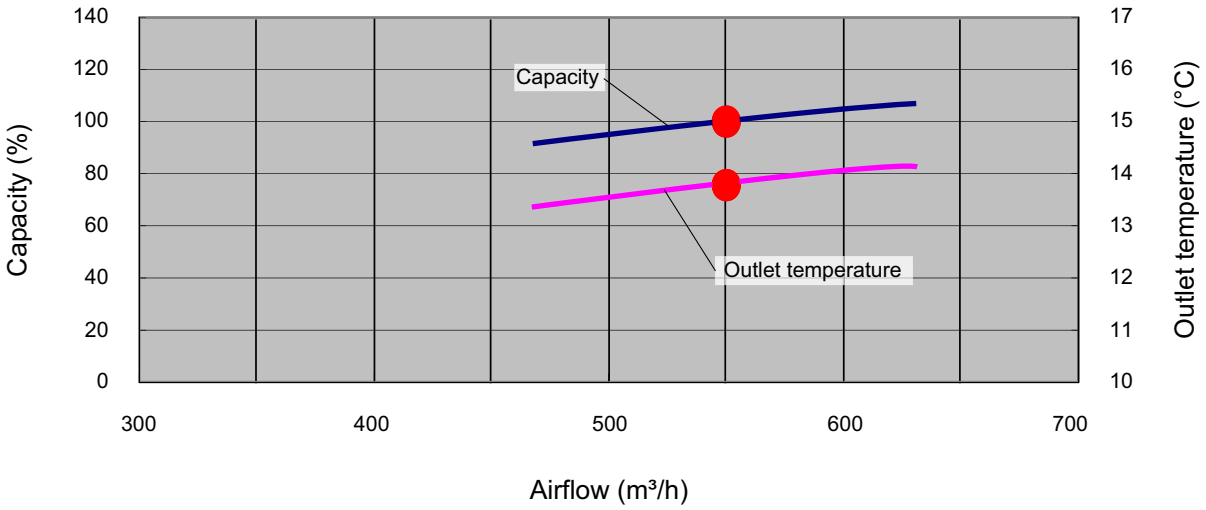

Heating

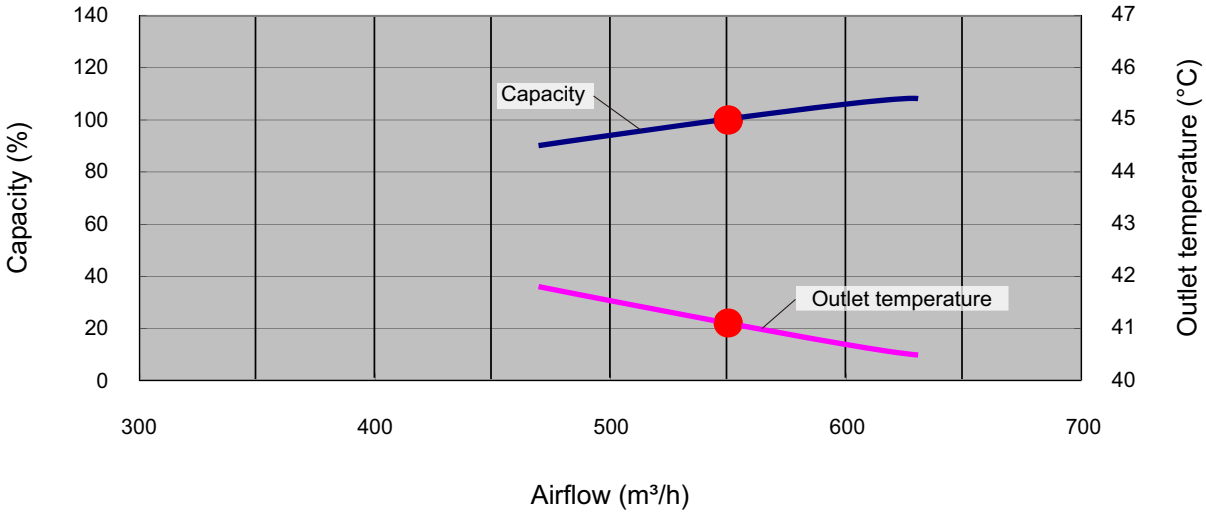

INDOOR UNITS

■ Model: ARXD009GLEH

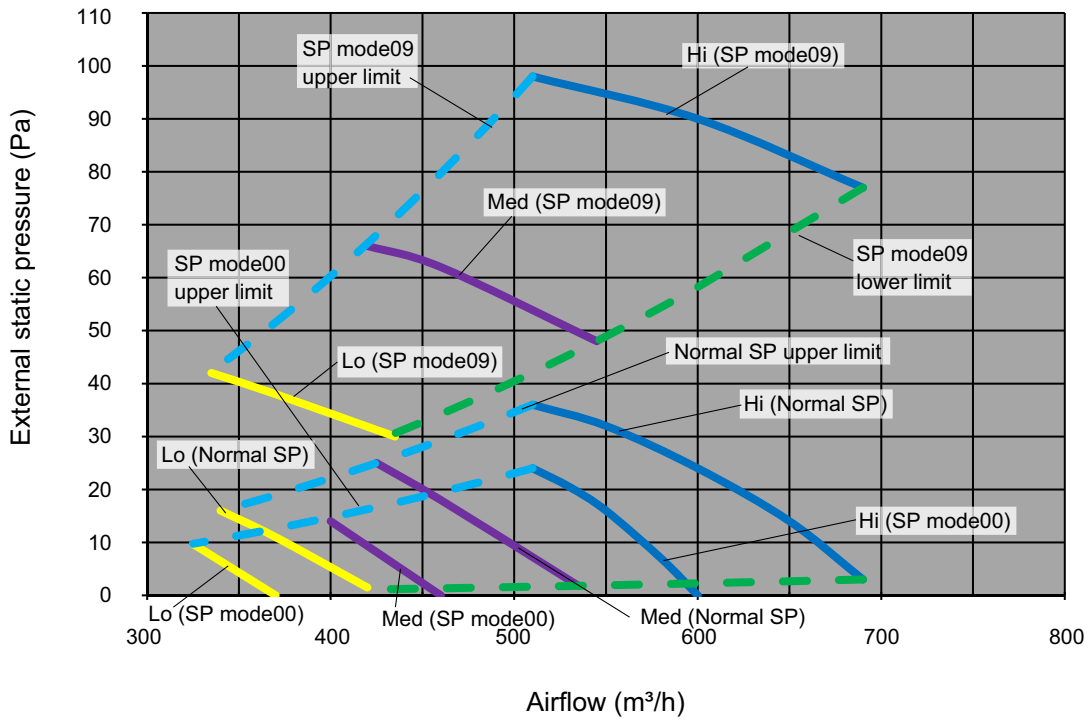

Available airflow rate range @ Hi speed

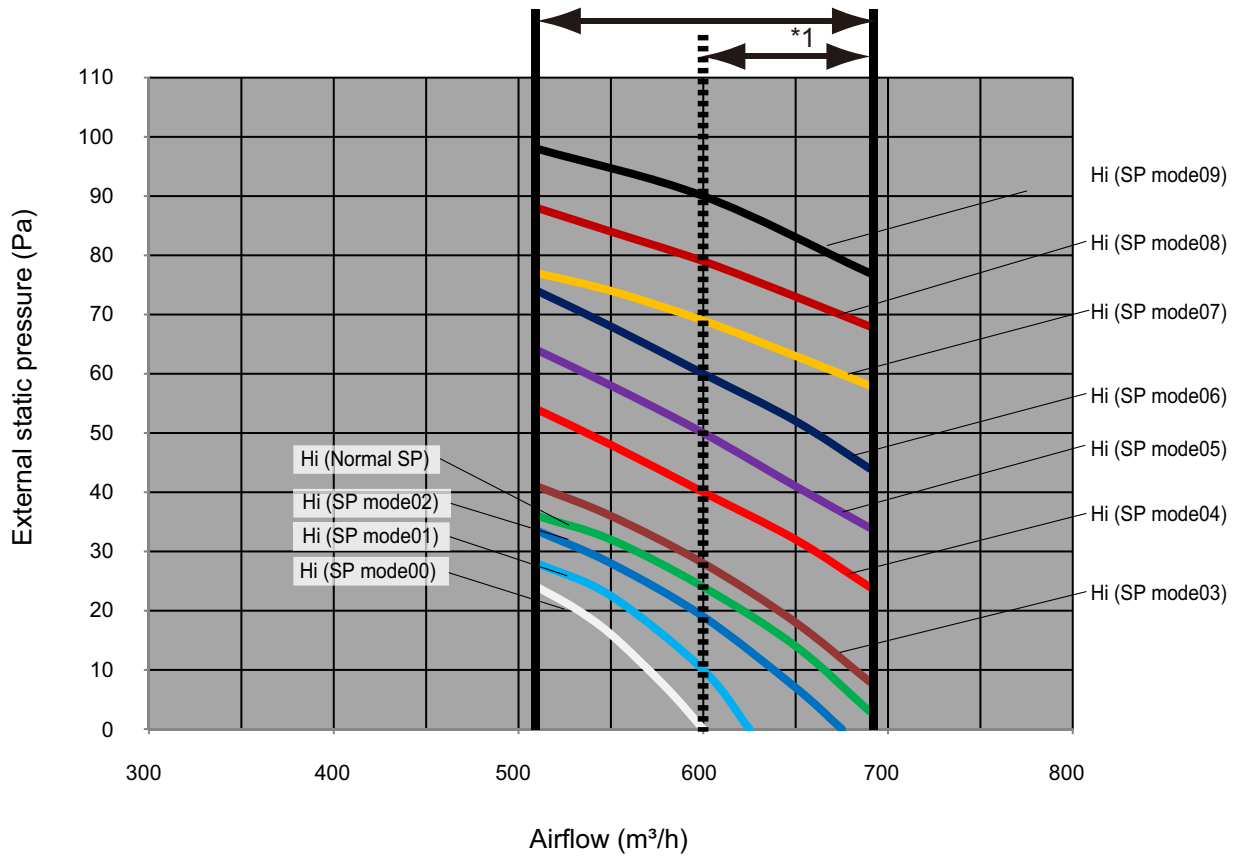

*1: Available airflow rate range when Auto louver grille kit (option) is installed.

- Fan speed: HIGH
- Vertical airflow direction louver: Up

INDOOR UNITS

Cooling

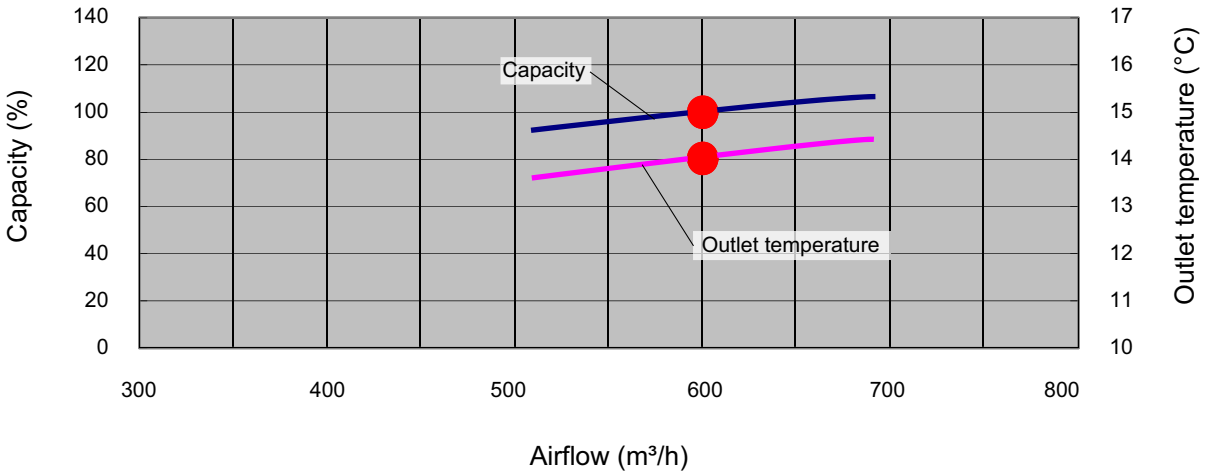

Heating

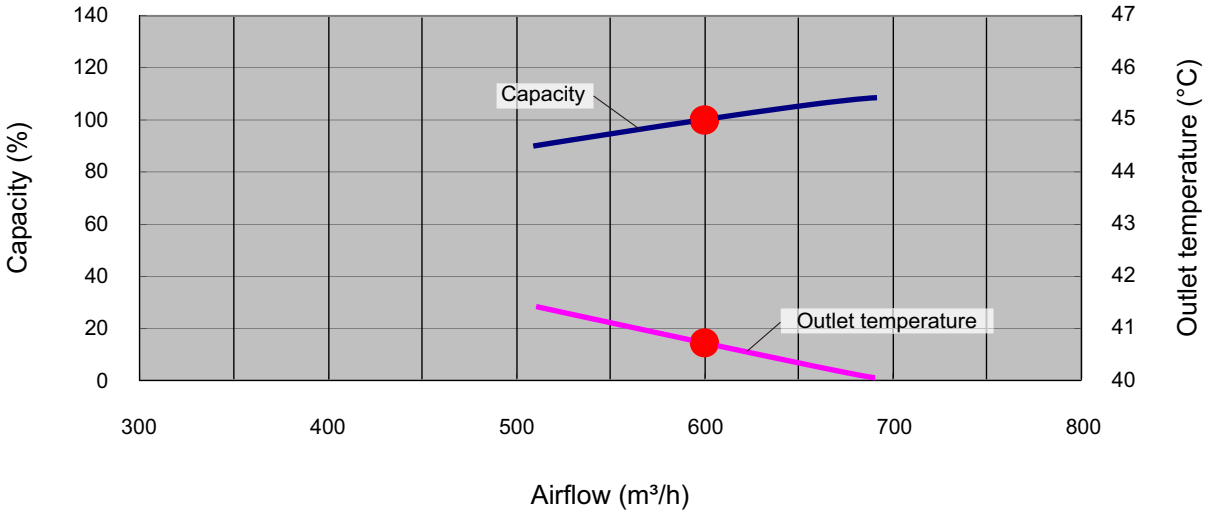

INDOOR UNITS

■ Model: ARXD012GLEH

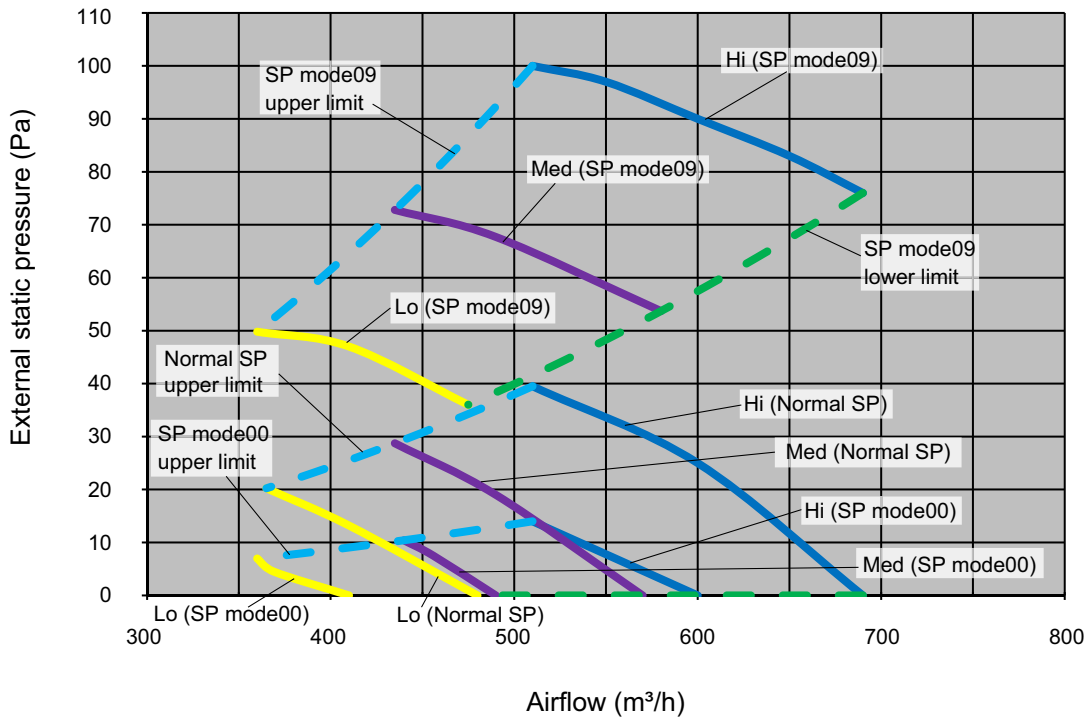

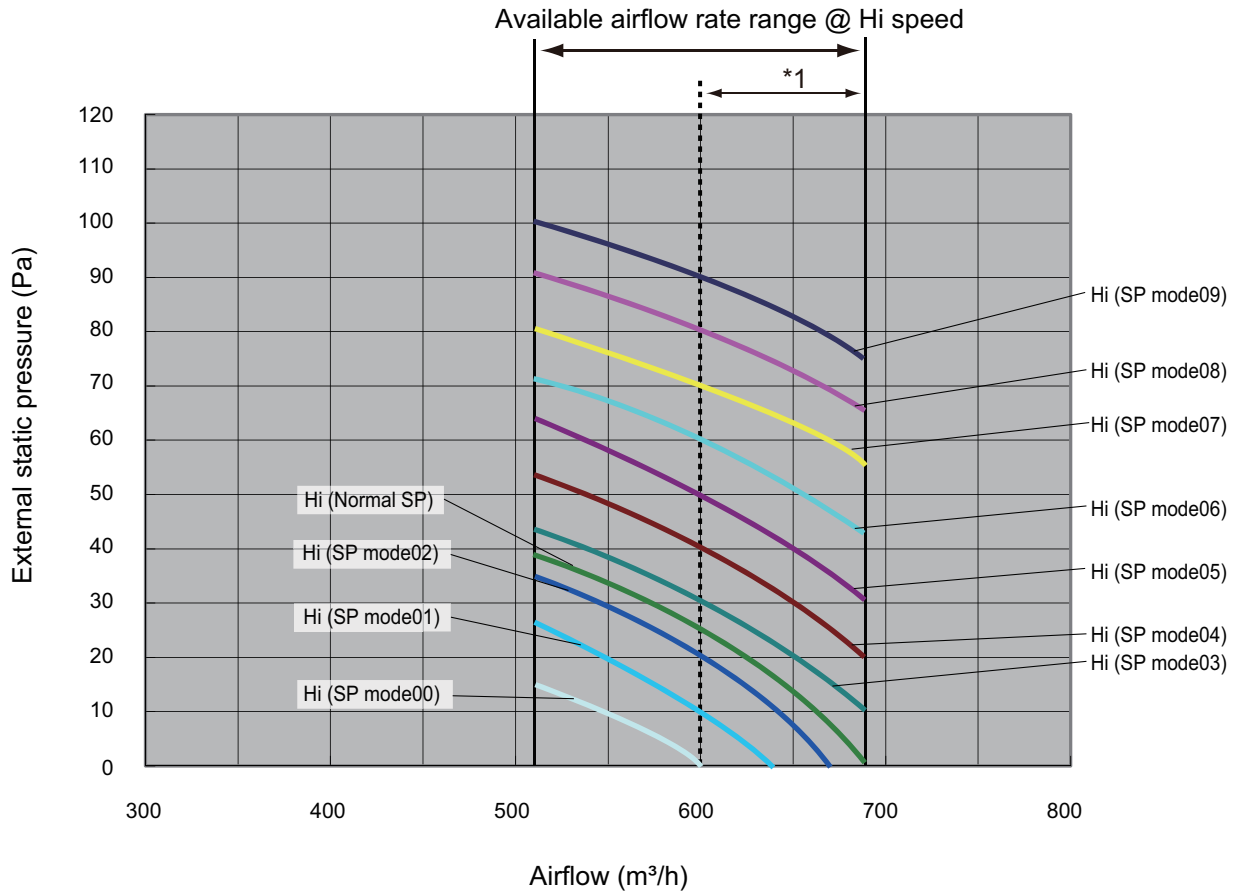

*1: Available airflow rate range when Auto louver grille kit (option) is installed.

- Fan speed: HIGH
- Vertical airflow direction louver: Up

INDOOR UNITS

Cooling

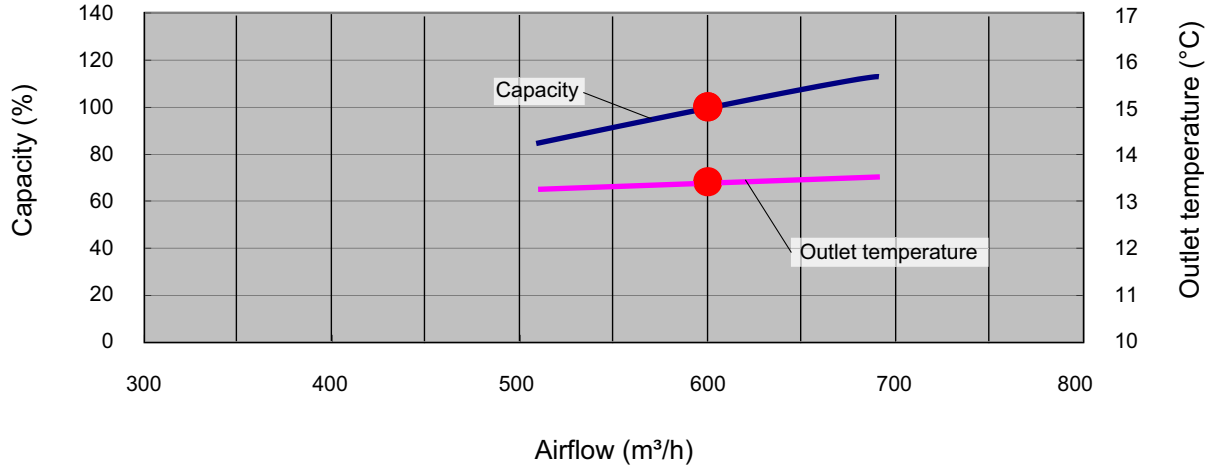

Heating

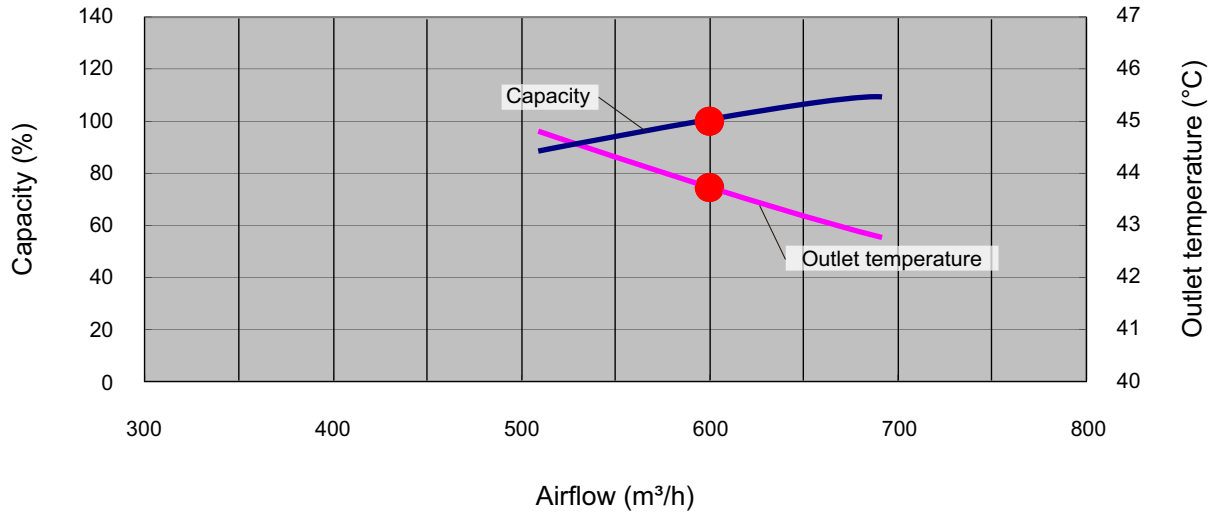

INDOOR UNITS

INDOOR UNITS

■ Model: ARXD014GLEH

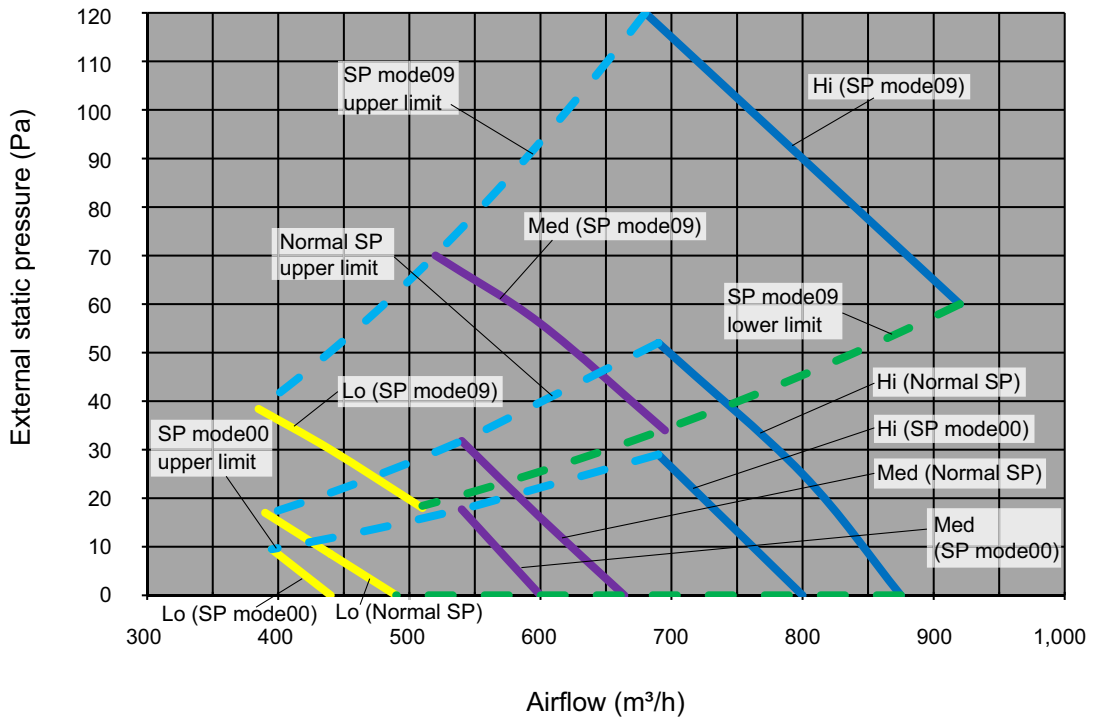

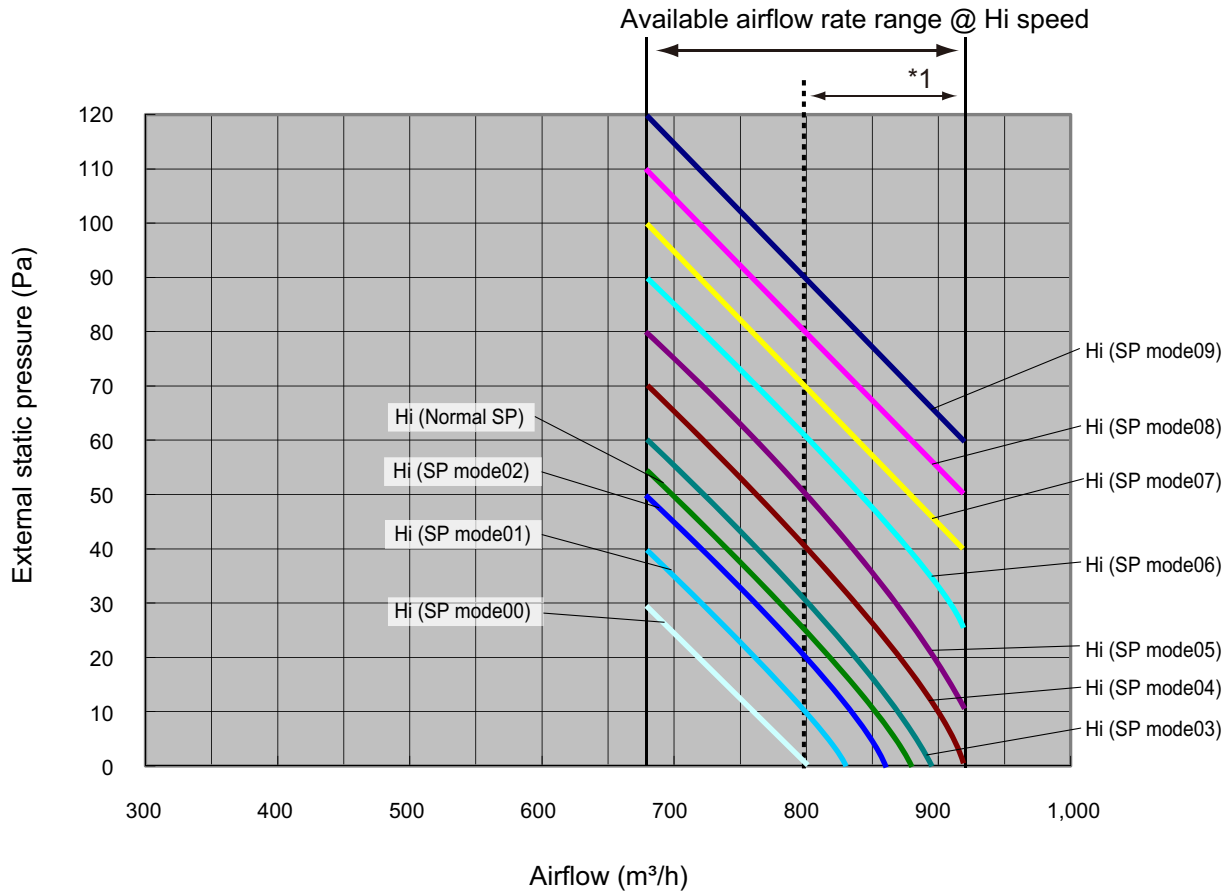

*1: Available airflow rate range when Auto louver grille kit (option) is installed.

- Fan speed: HIGH
- Vertical airflow direction louver: Up

INDOOR UNITS

Cooling

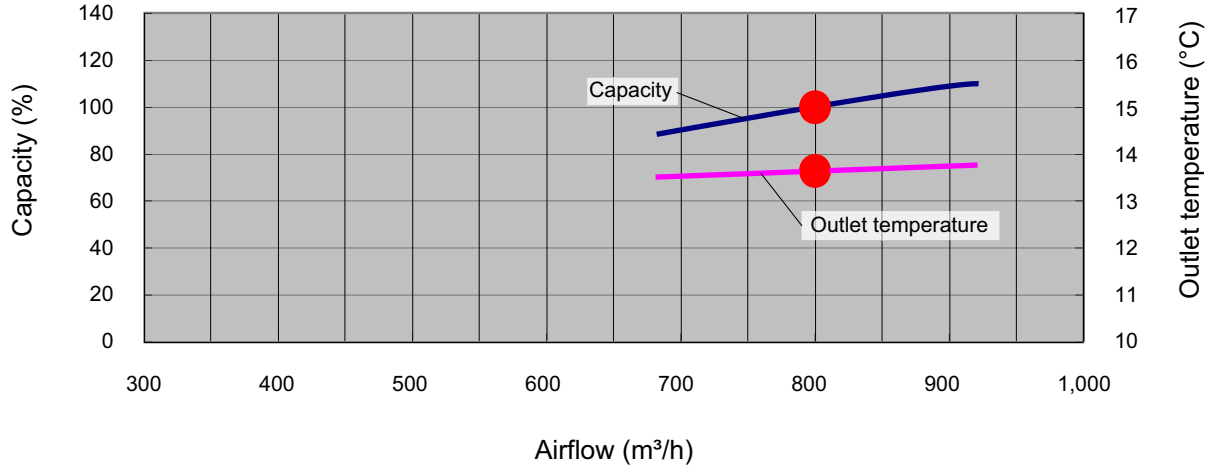

Heating

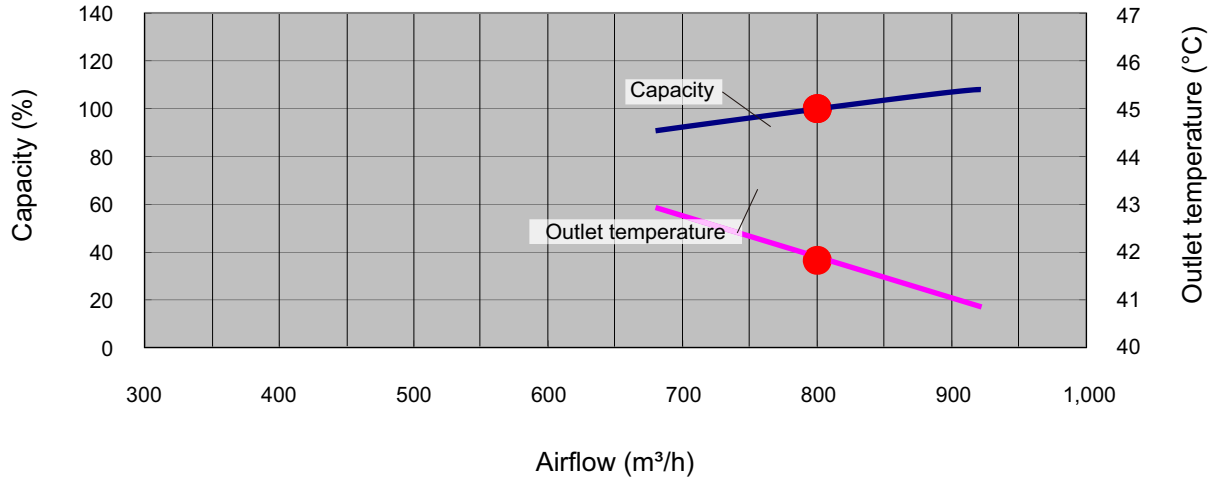

INDOOR UNITS

■ Model: ARXD018GLEH

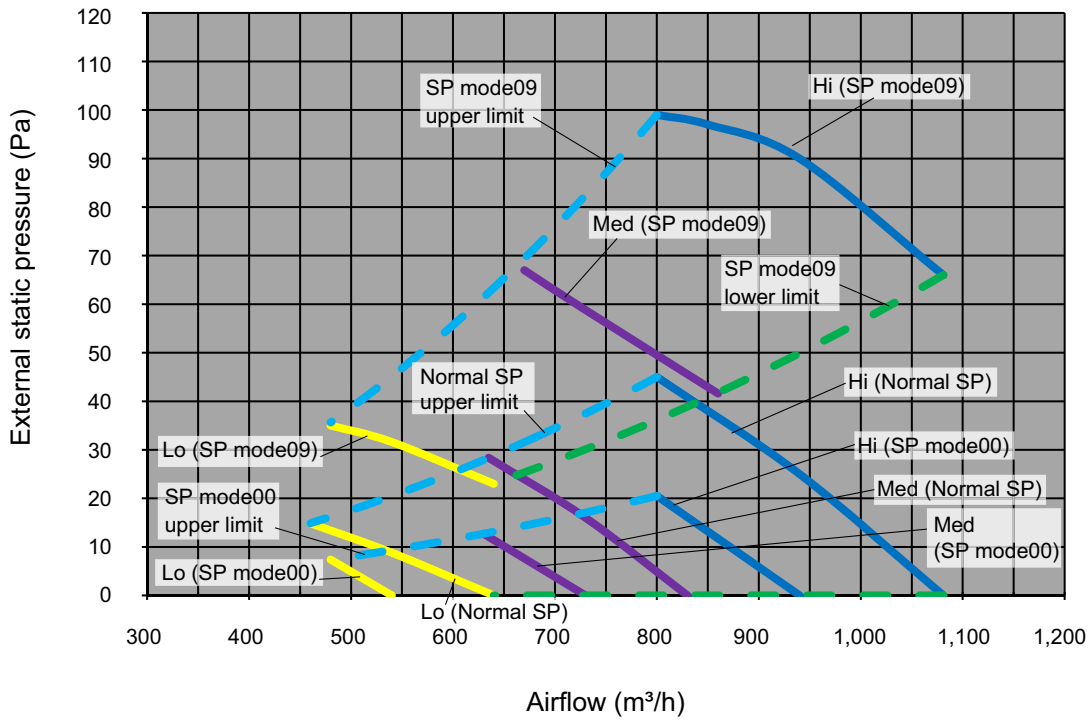

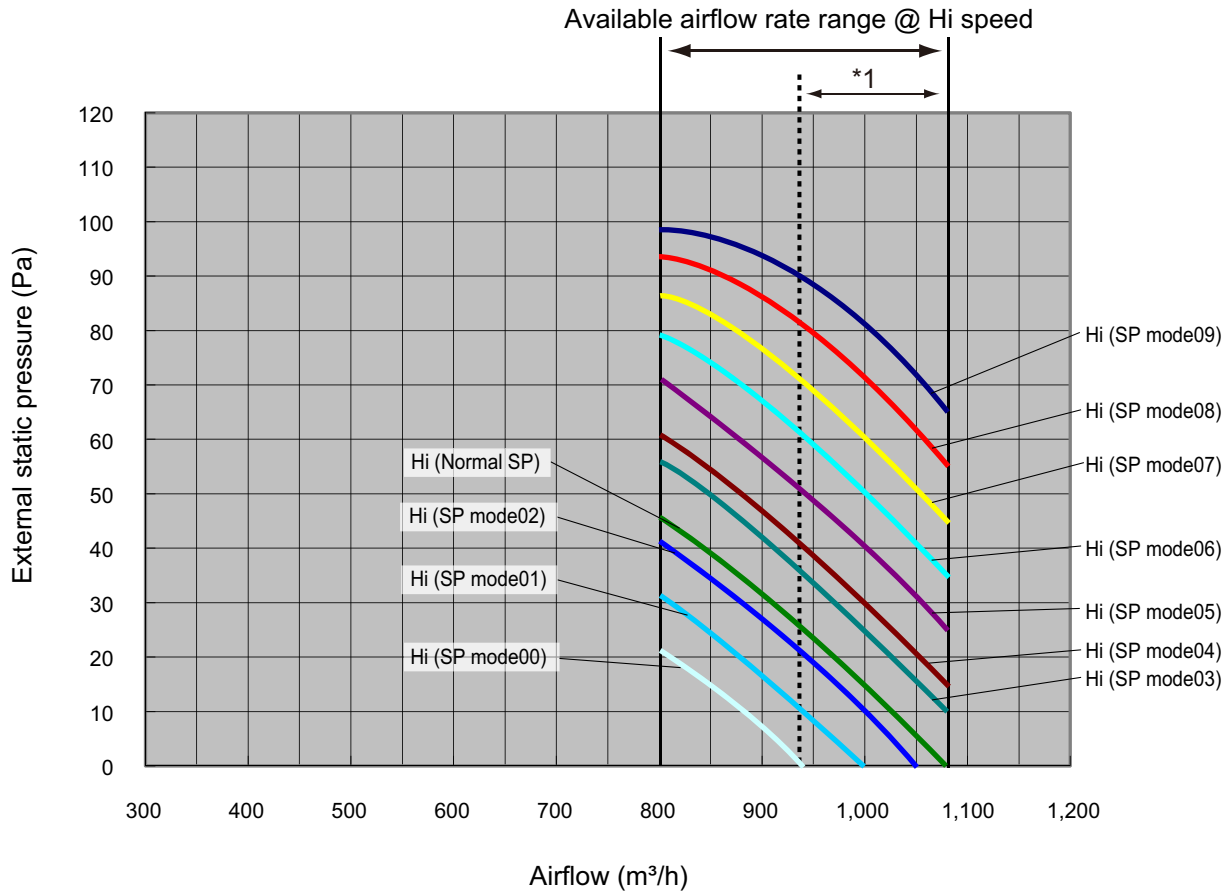

*1: Available airflow rate range when Auto louver grille kit (option) is installed.

- Fan speed: HIGH
- Vertical airflow direction louver: Up

INDOOR UNITS

Cooling

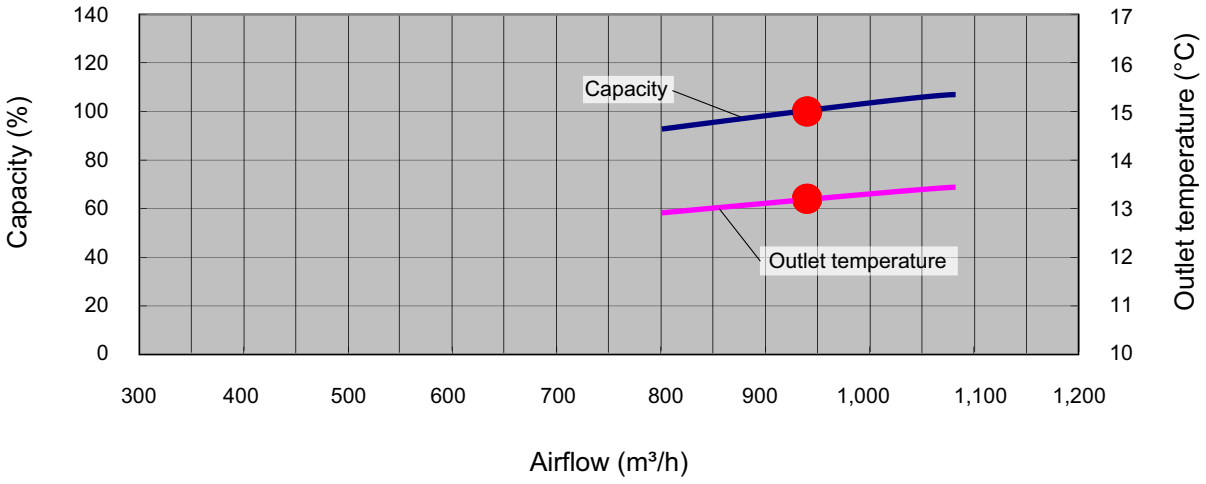

Heating

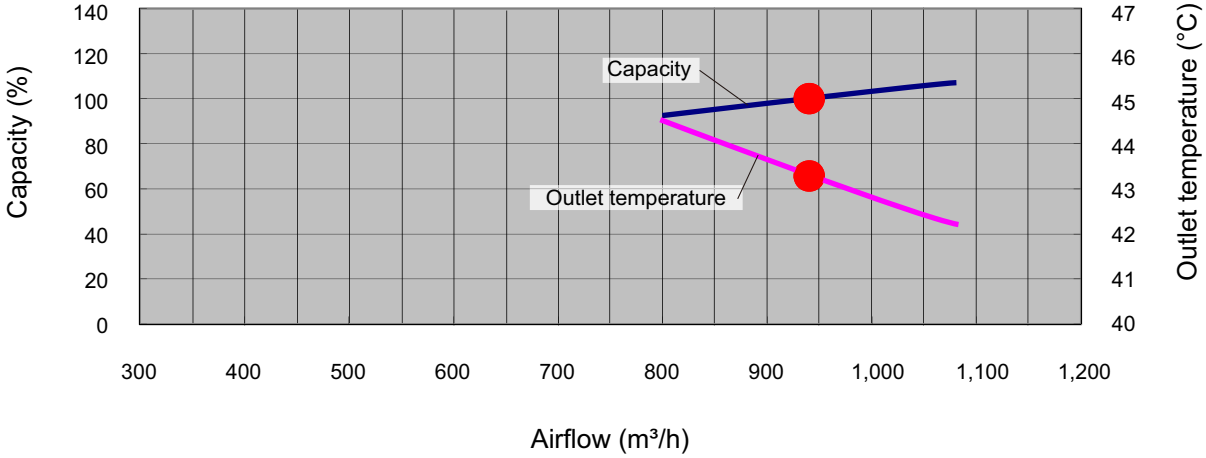

INDOOR UNITS

■ Model: ARXD024GLEH

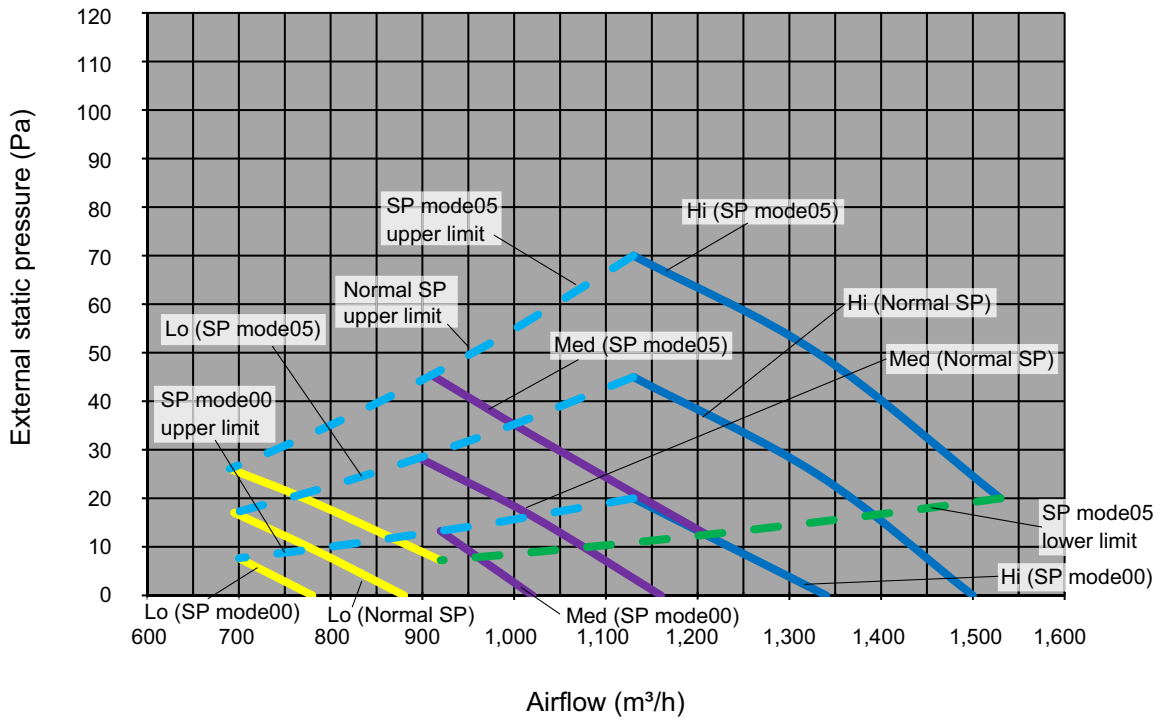

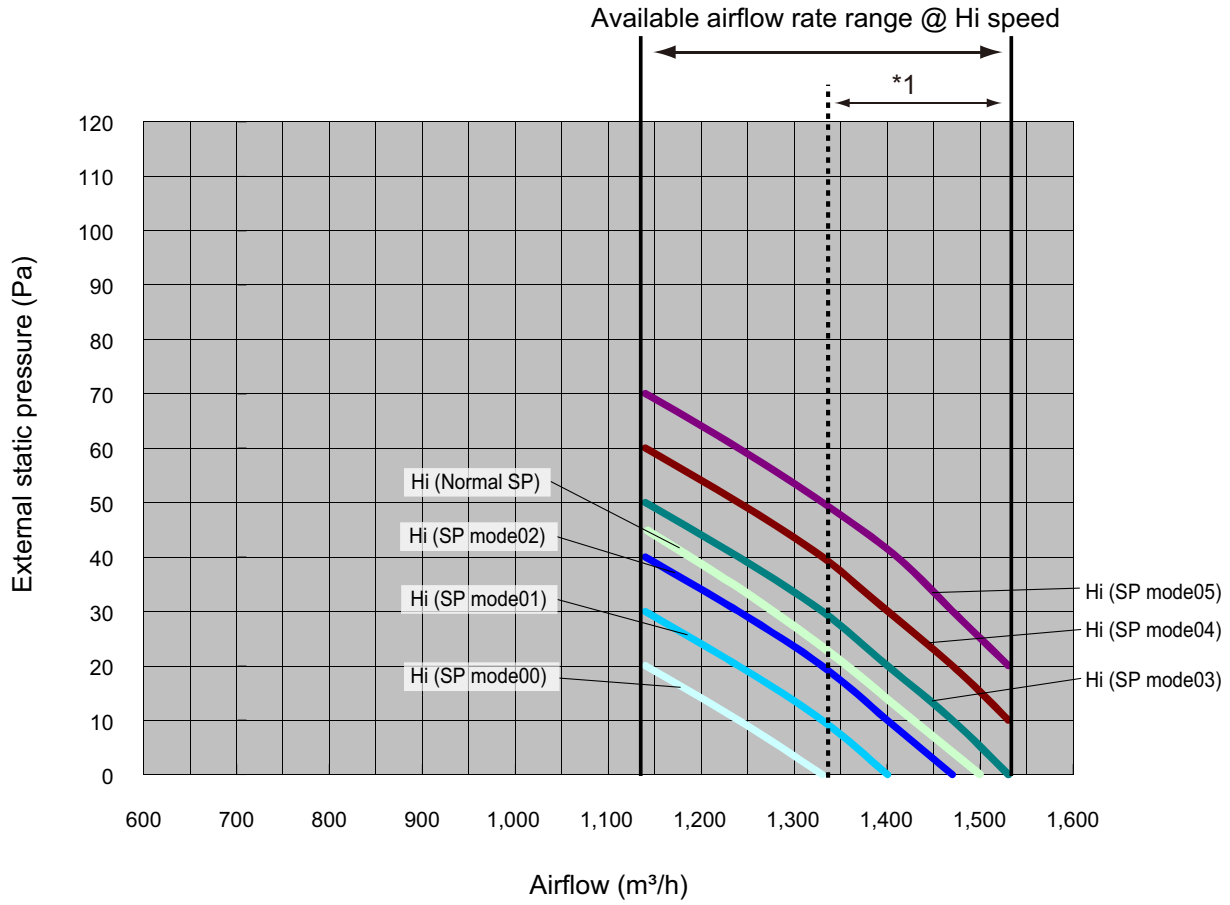

*1: Available airflow rate range when Auto louver grille kit (option) is installed.

- Fan speed: HIGH
- Vertical airflow direction louver: Up

INDOOR UNITS

Cooling

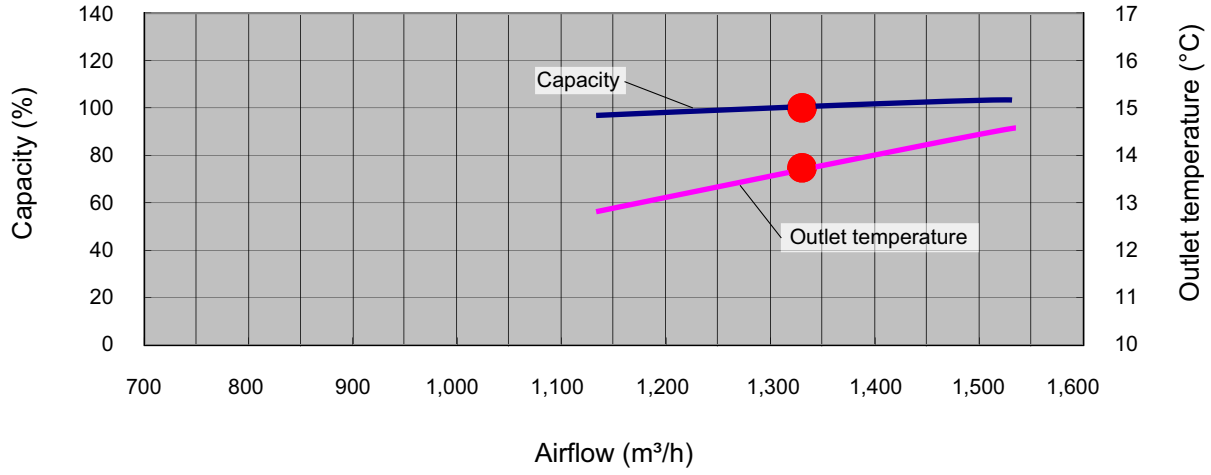

Heating

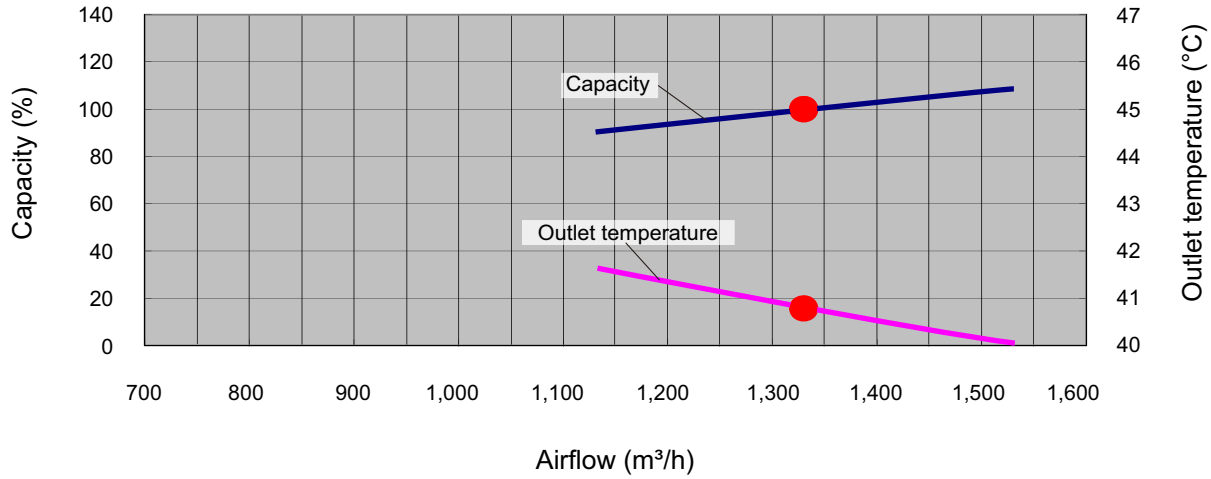

INDOOR UNITS

7-3. Low static pressure duct type (High efficiency)

■ Model: ARXP018GLFH

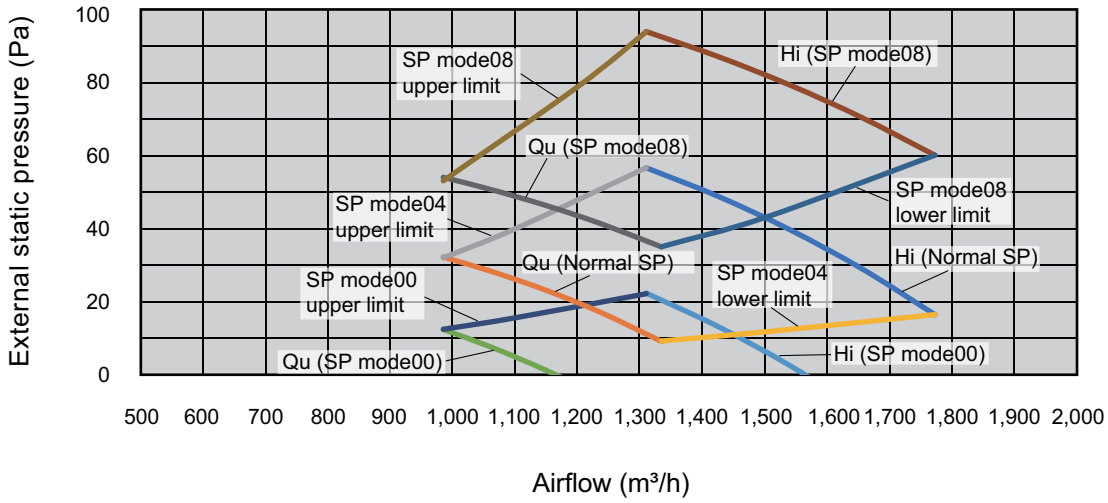

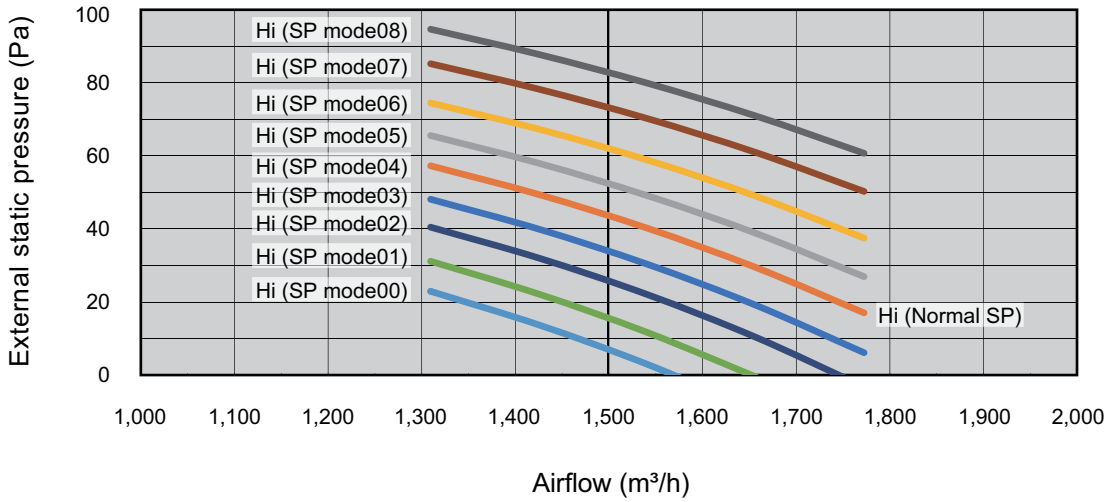

INDOOR UNITS

Cooling

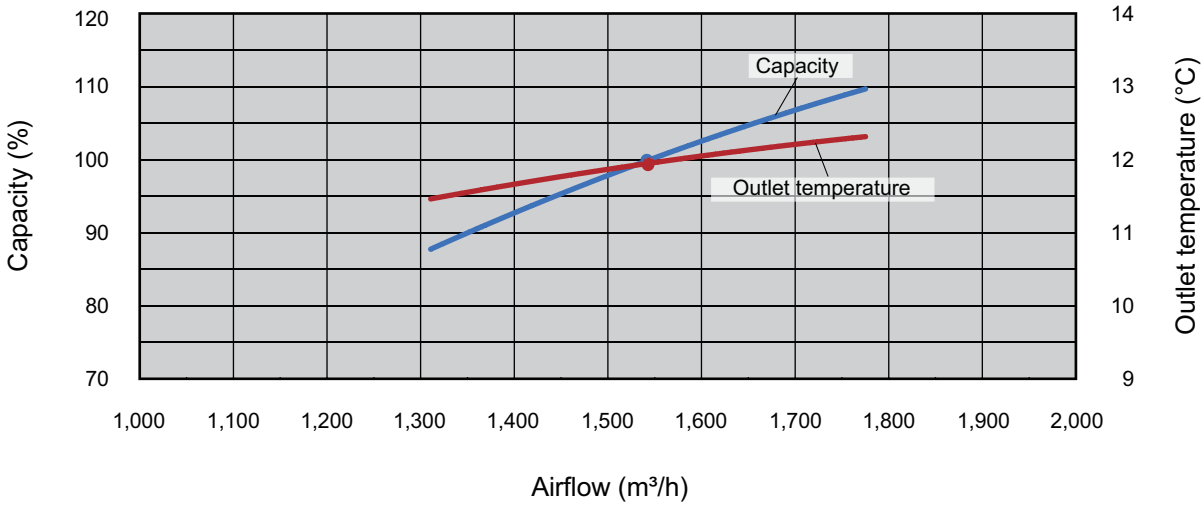

Heating

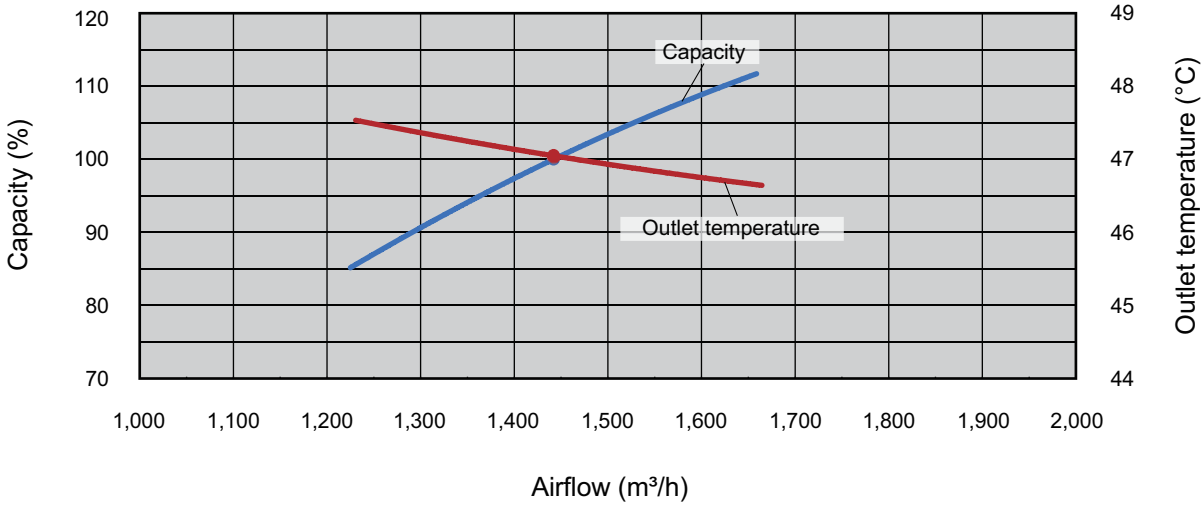

INDOOR UNITS

■ Model: ARXP030GLFH

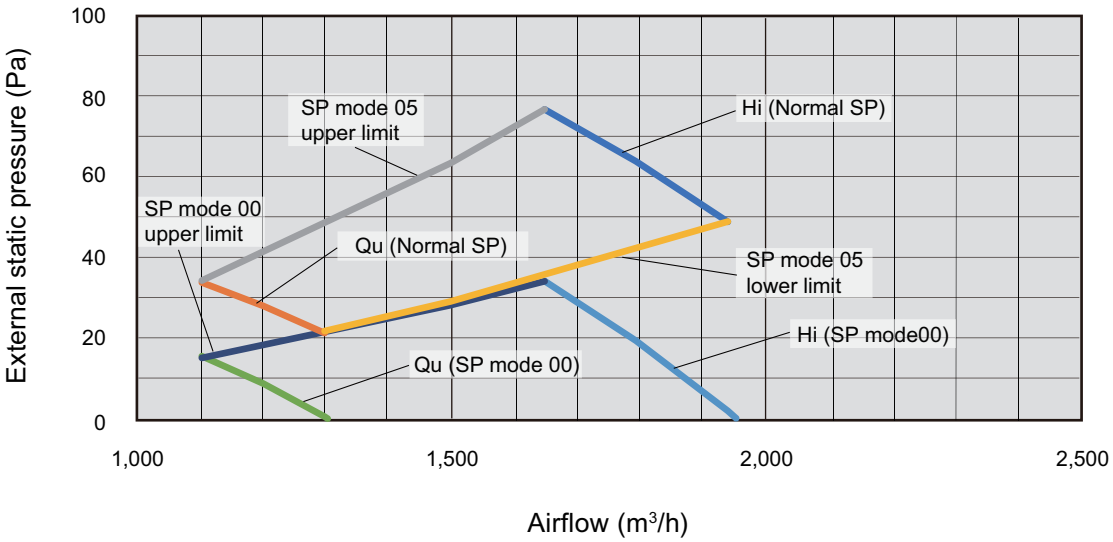

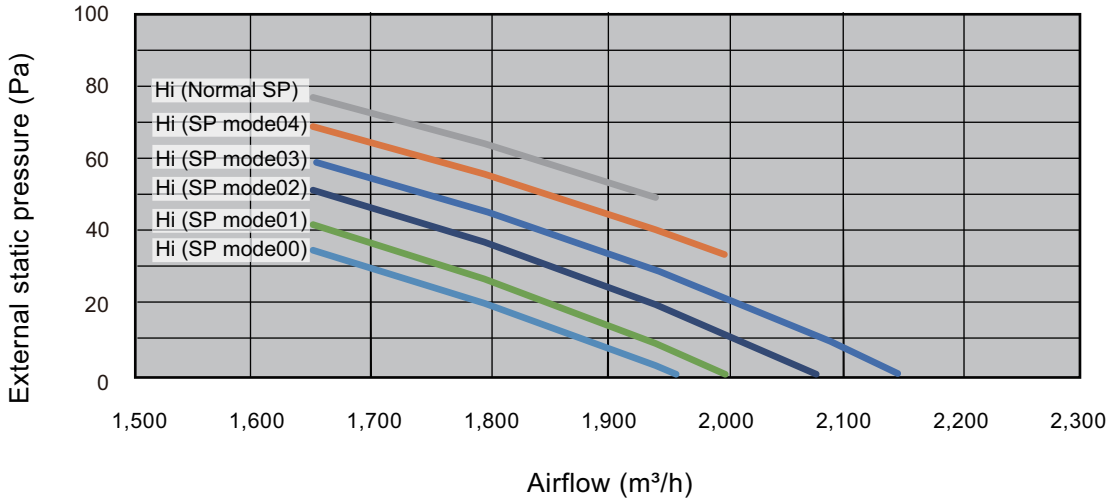

INDOOR UNITS

INDOOR UNITS

Cooling

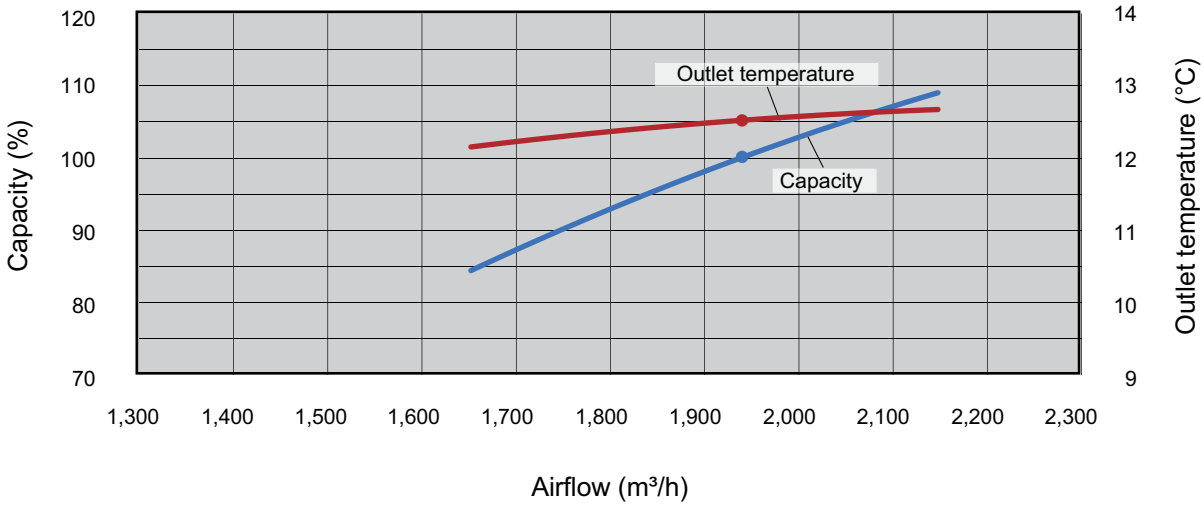

Heating

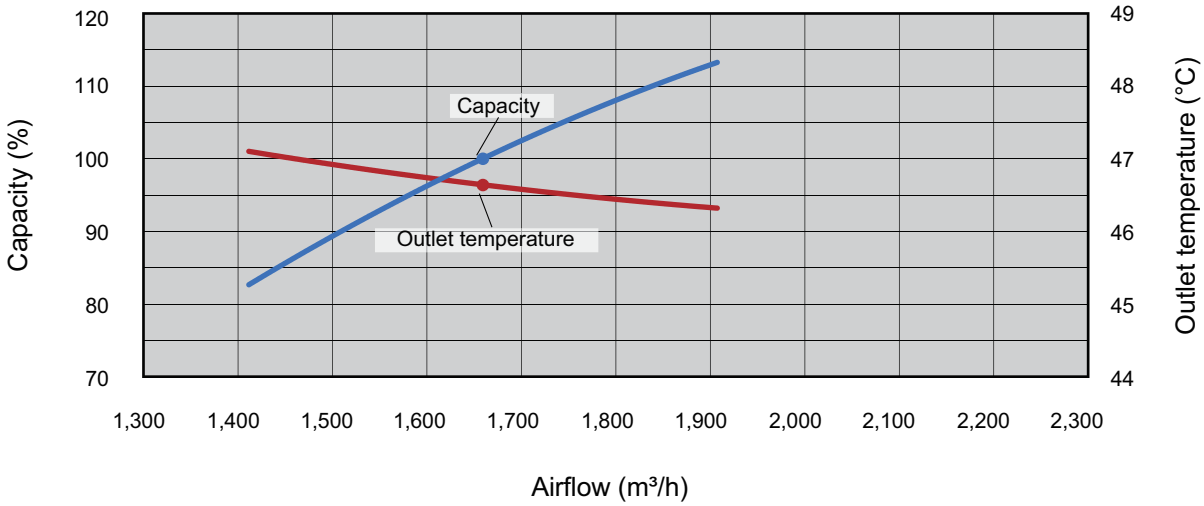

INDOOR UNITS

7-4. Medium static pressure duct type

■ Model: ARXA024GLEH

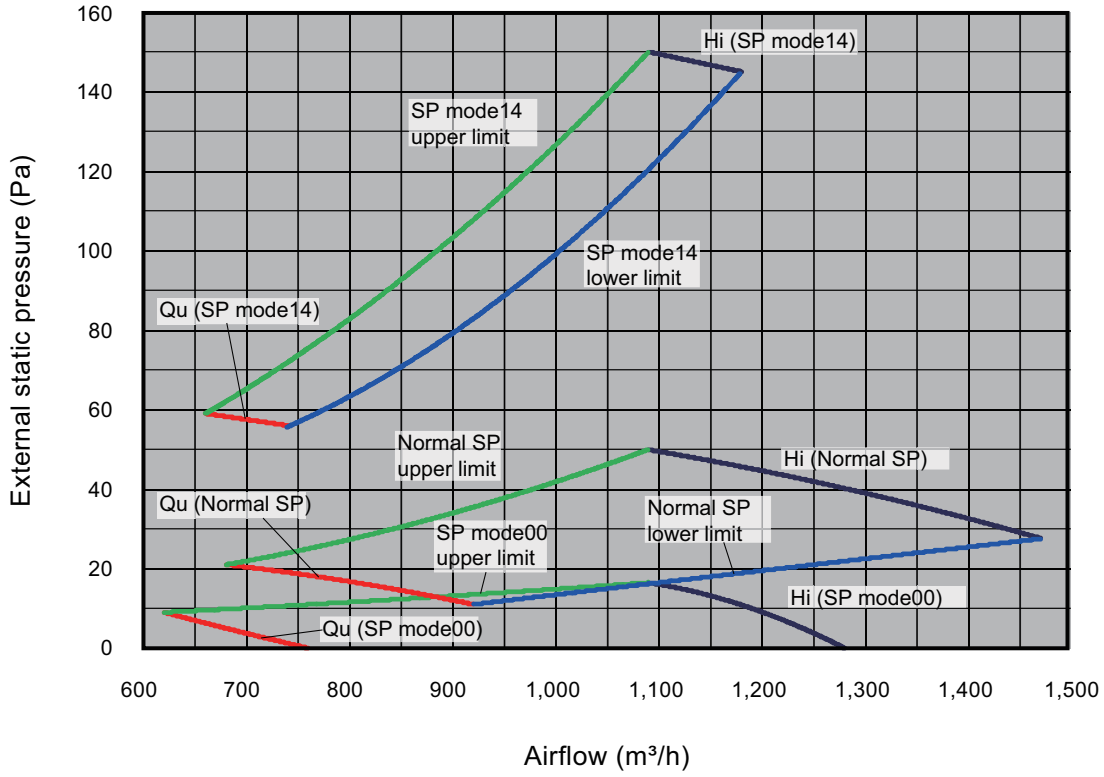

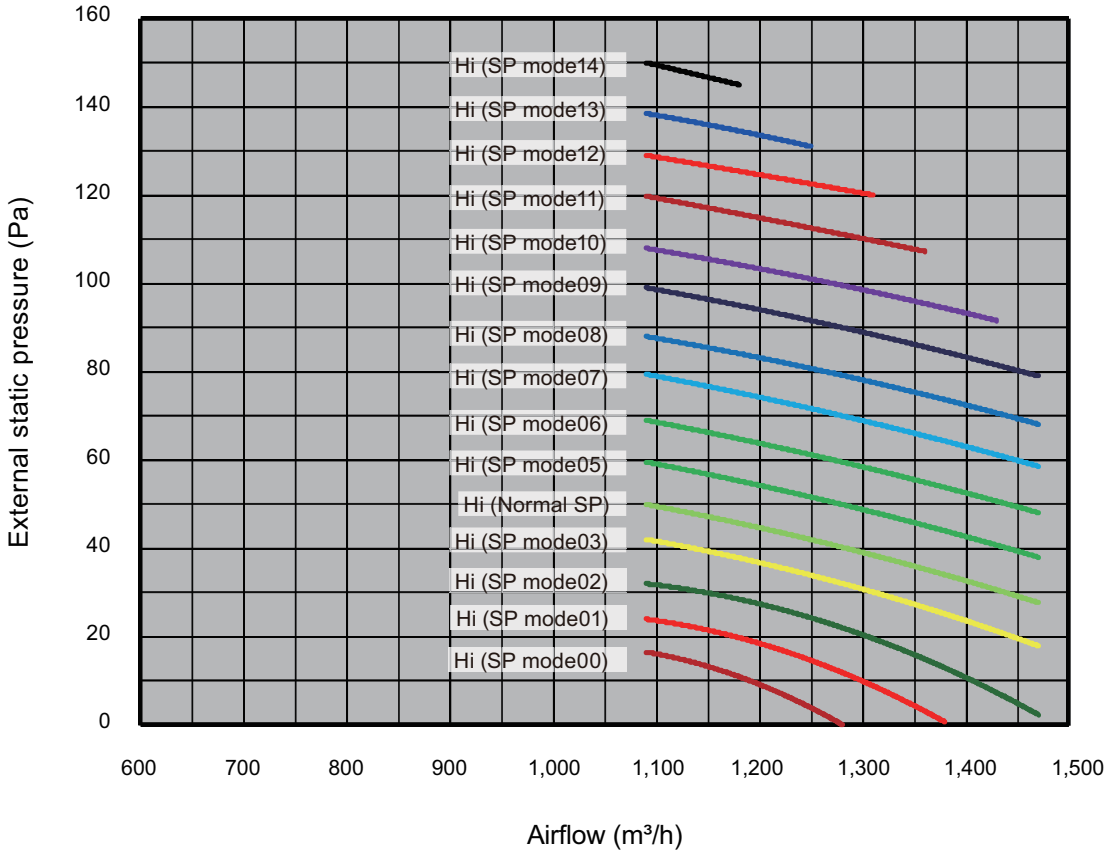

INDOOR UNITS

Cooling

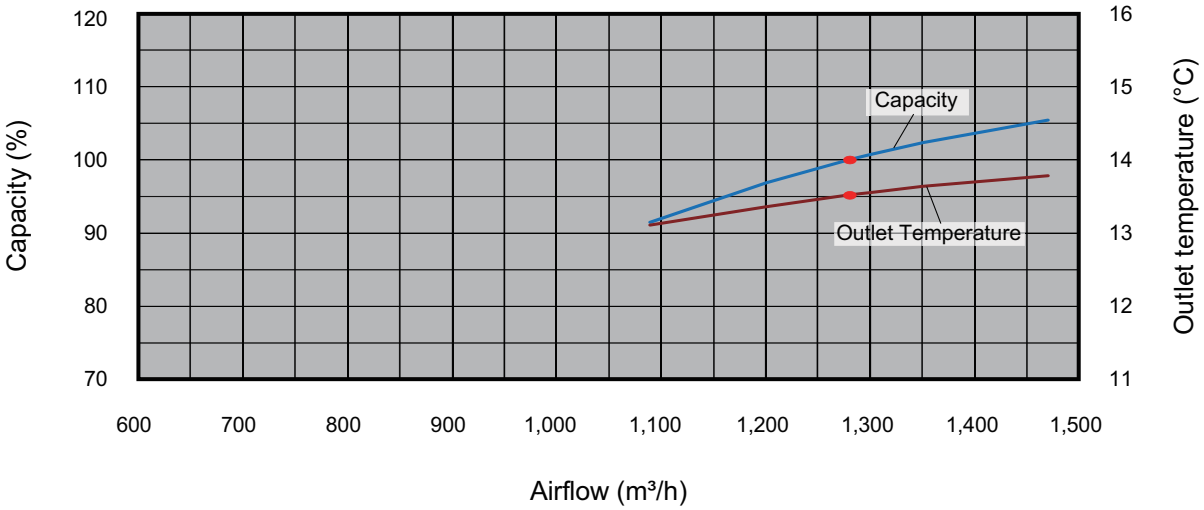

Heating

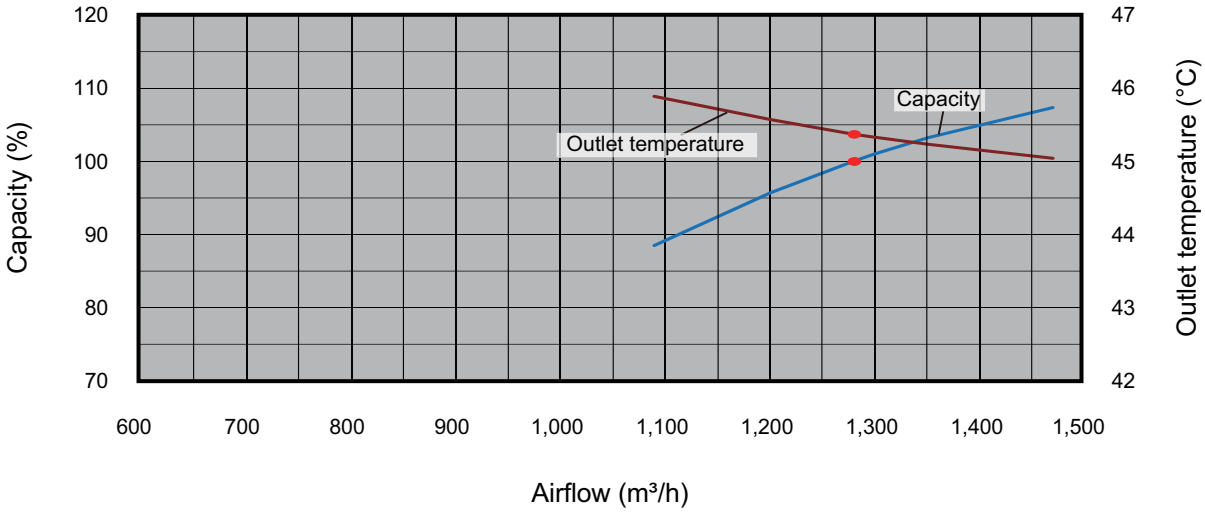

INDOOR UNITS

INDOOR UNITS

■ Model: ARXA030GLEH

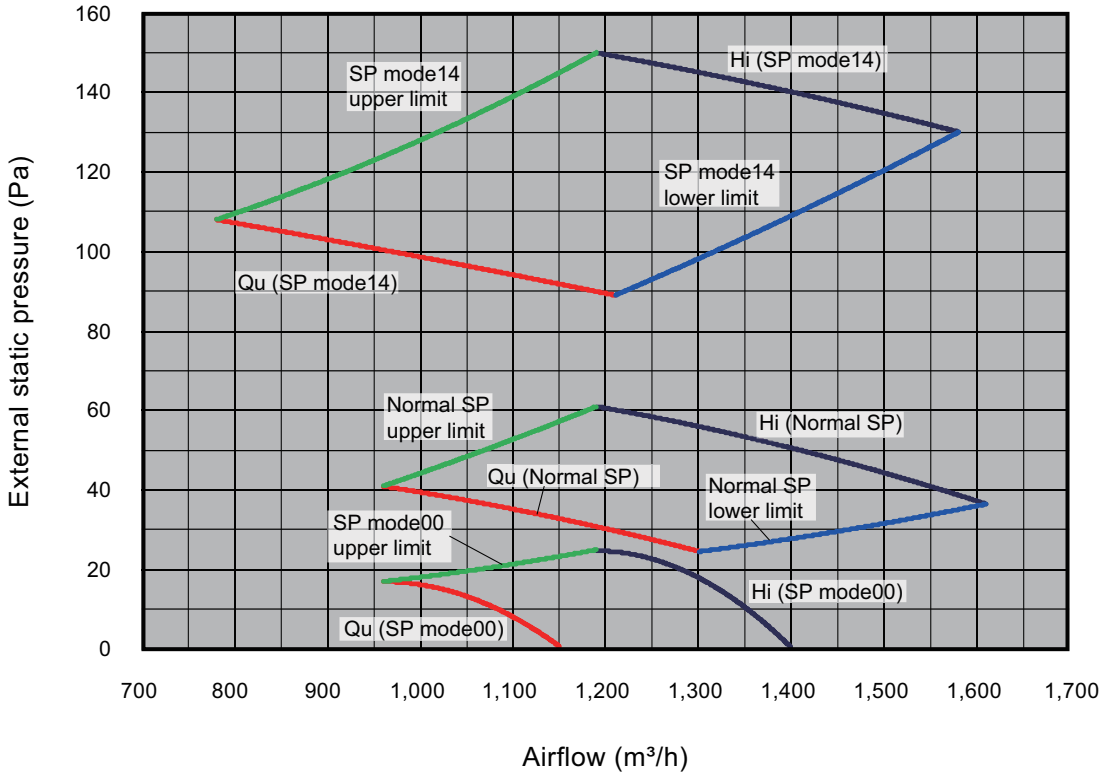

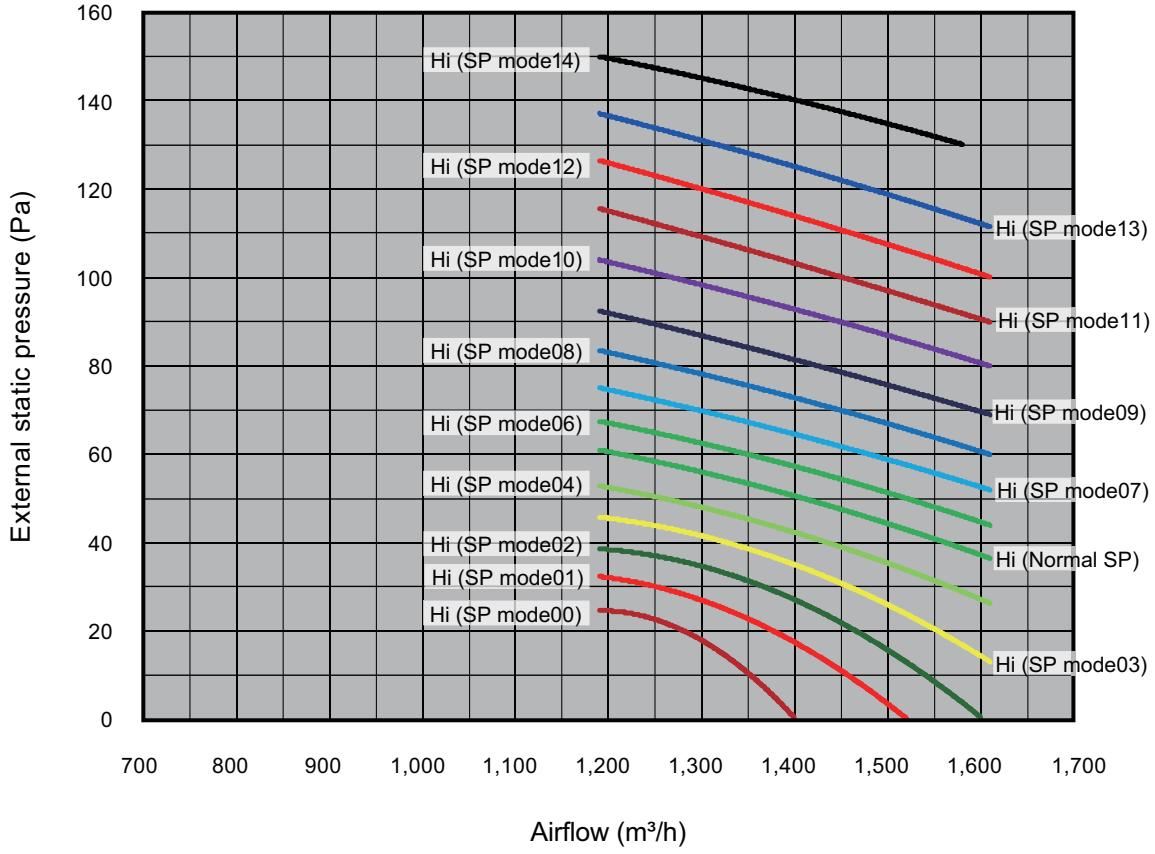

INDOOR UNITS

Cooling

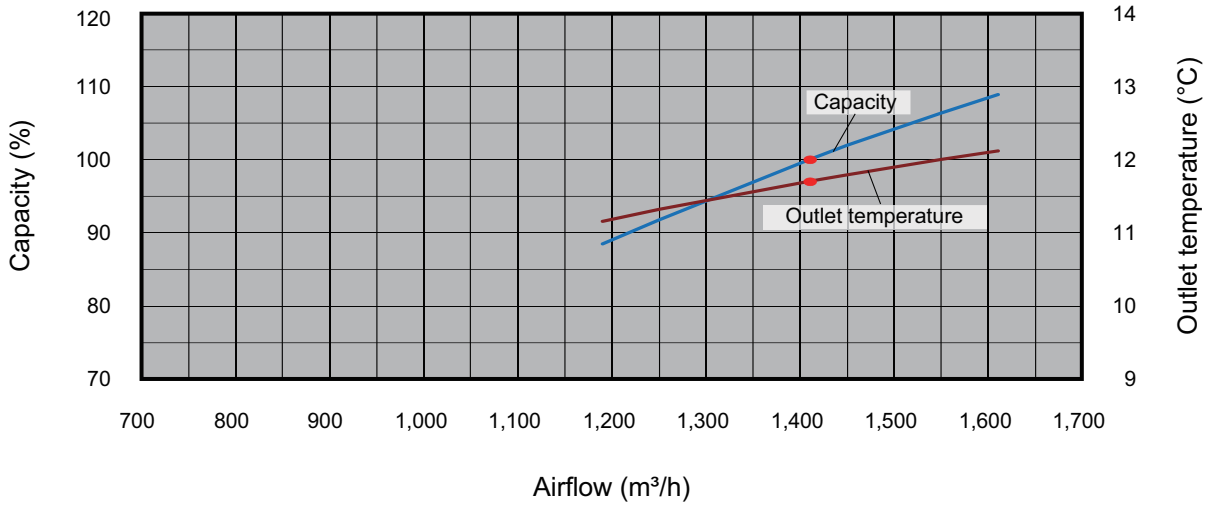

Heating

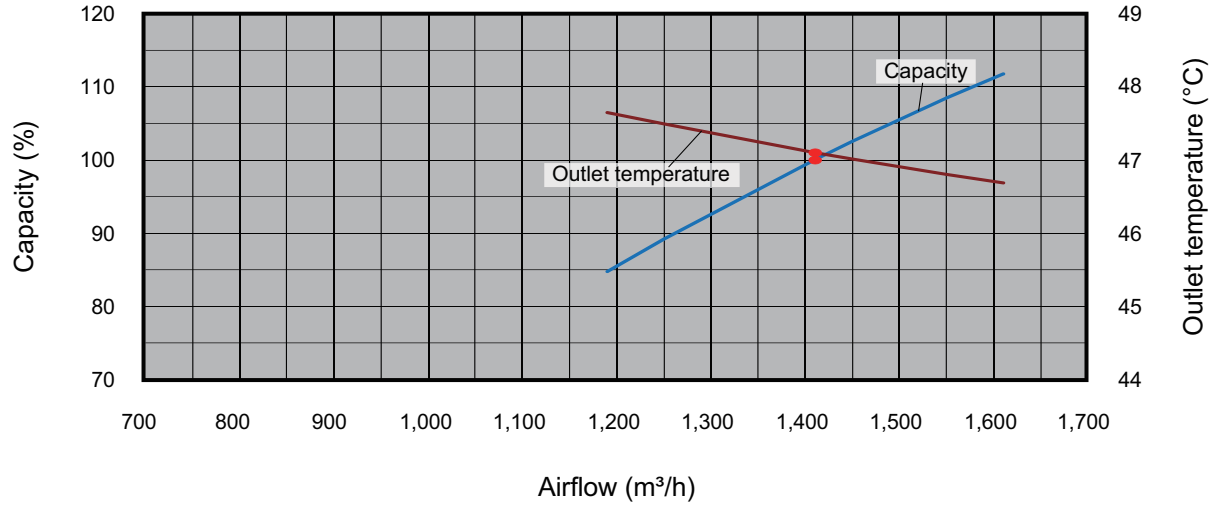

INDOOR UNITS

INDOOR UNITS

■ Model: ARXA036GLEH

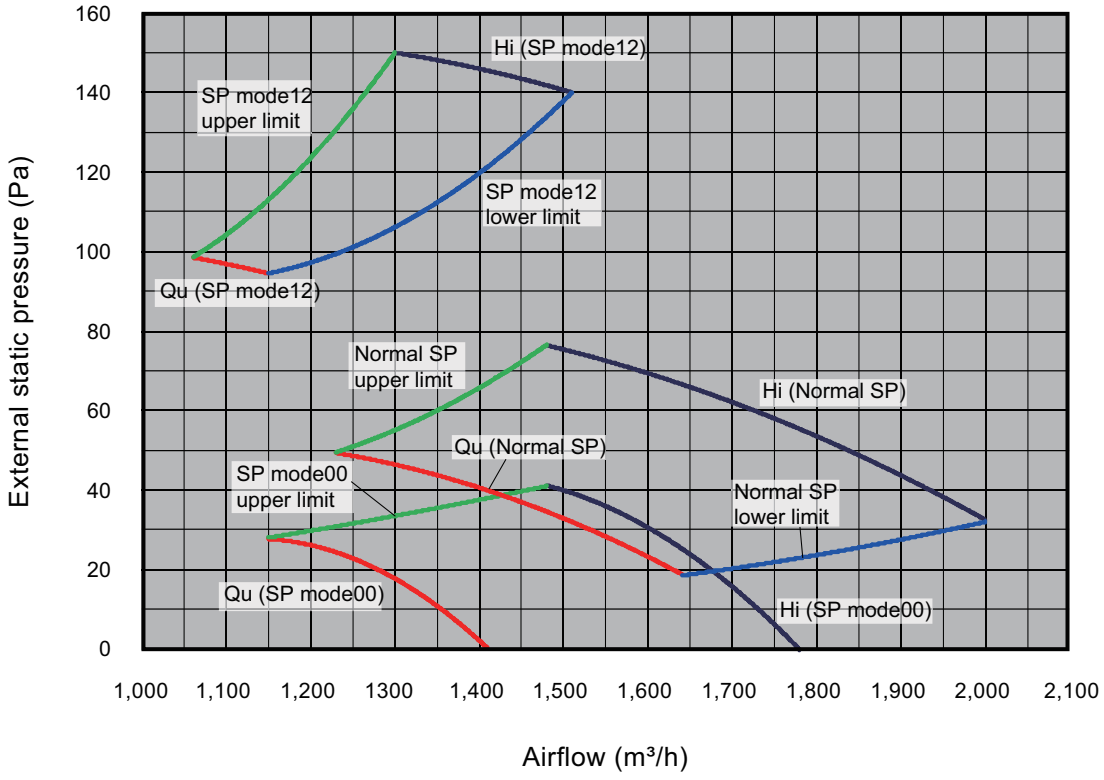

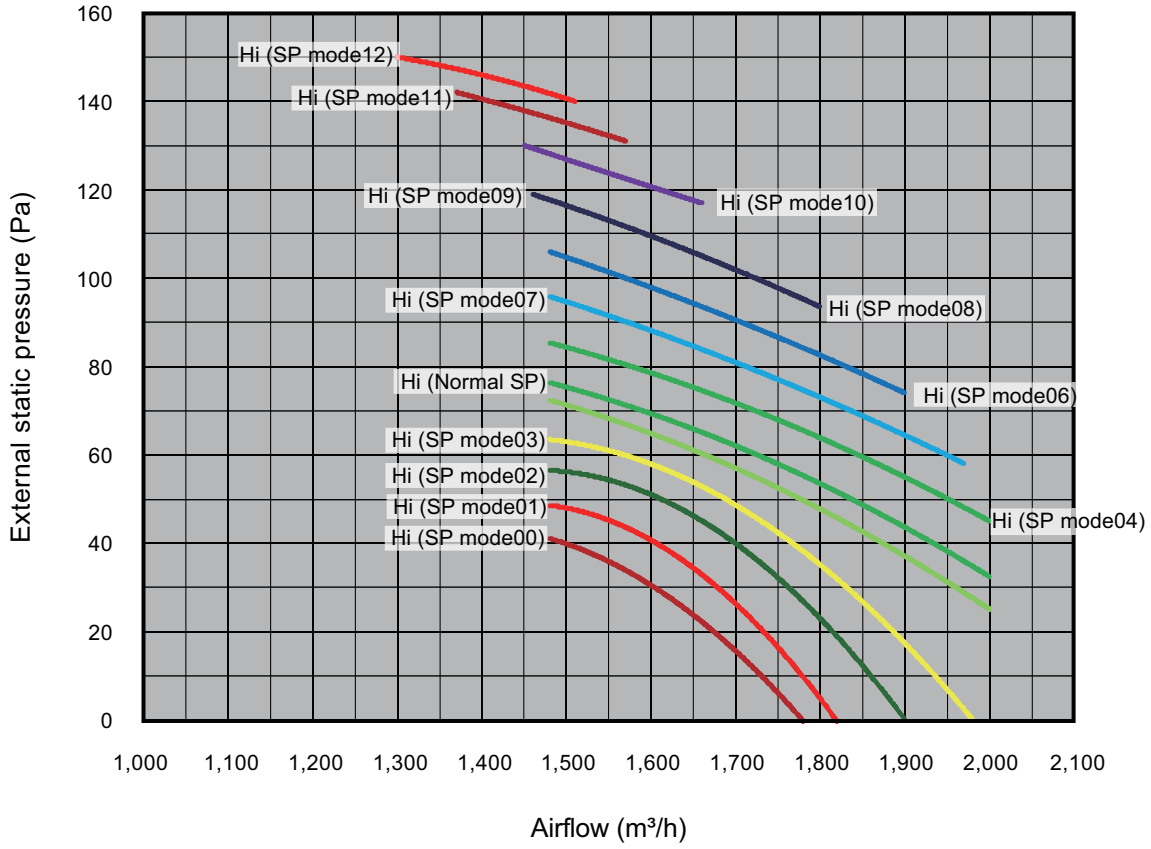

INDOOR UNITS

Cooling

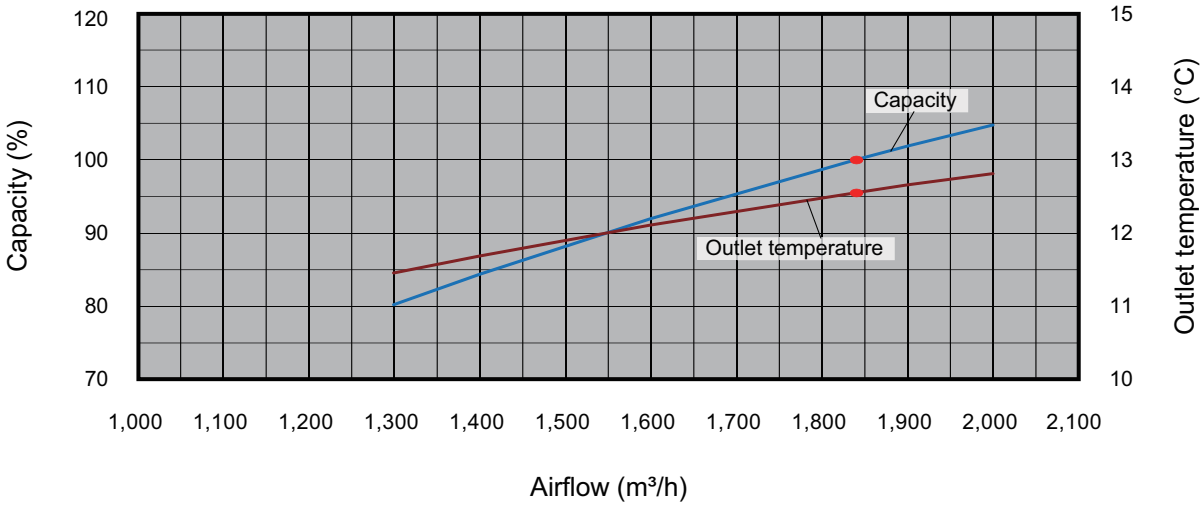

Heating

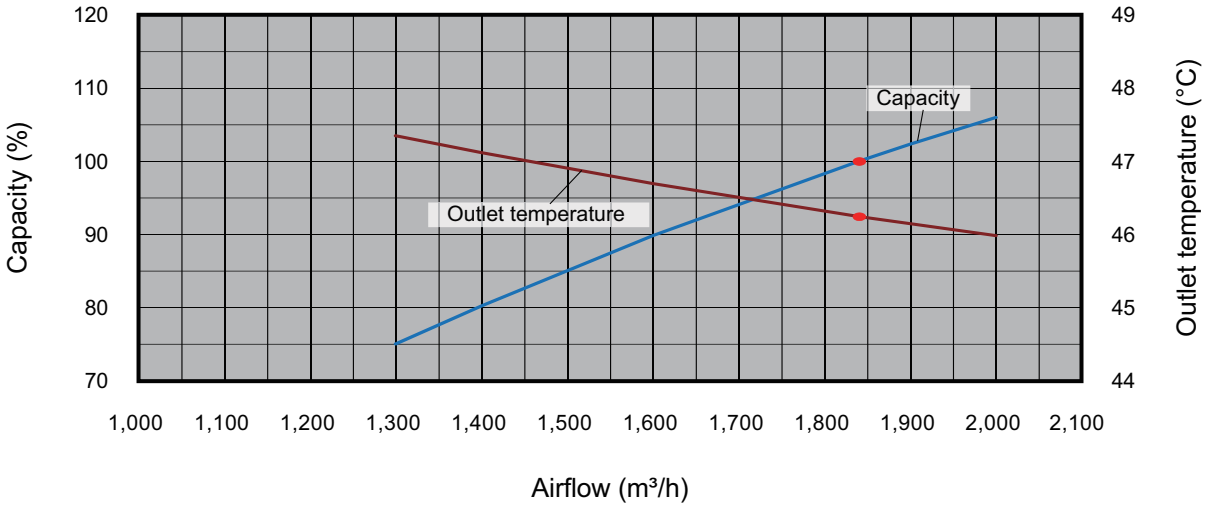

INDOOR UNITS

■ Model: ARXA045GLEH

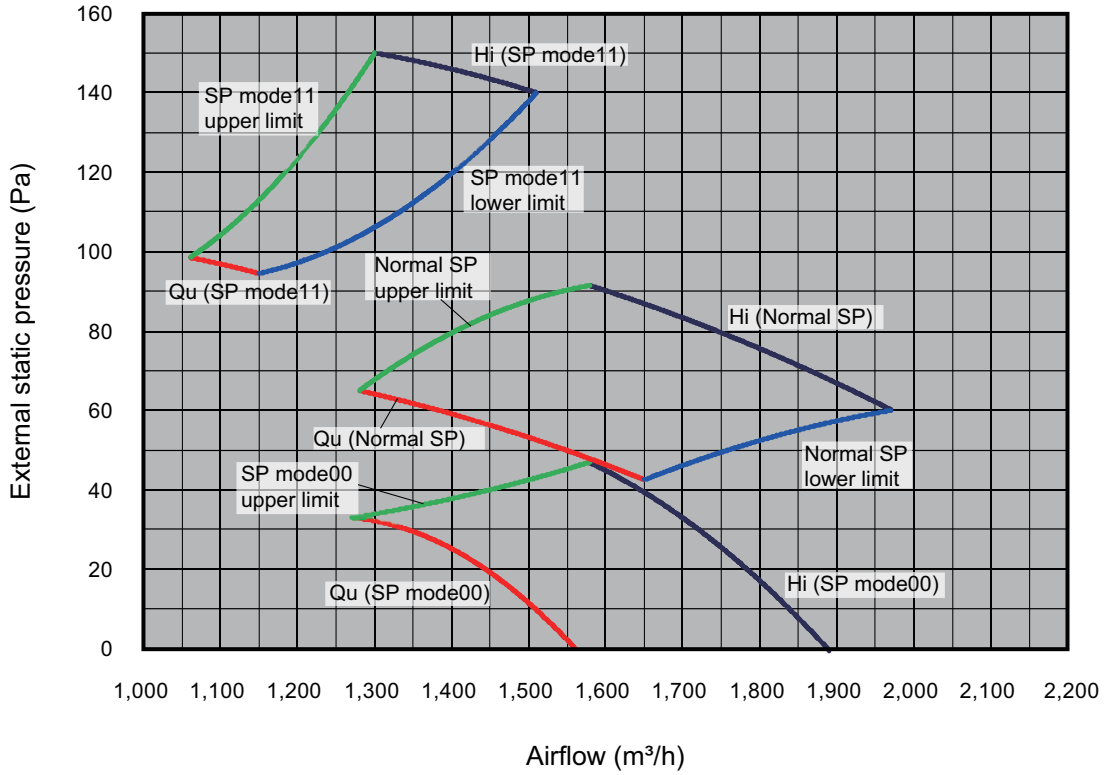

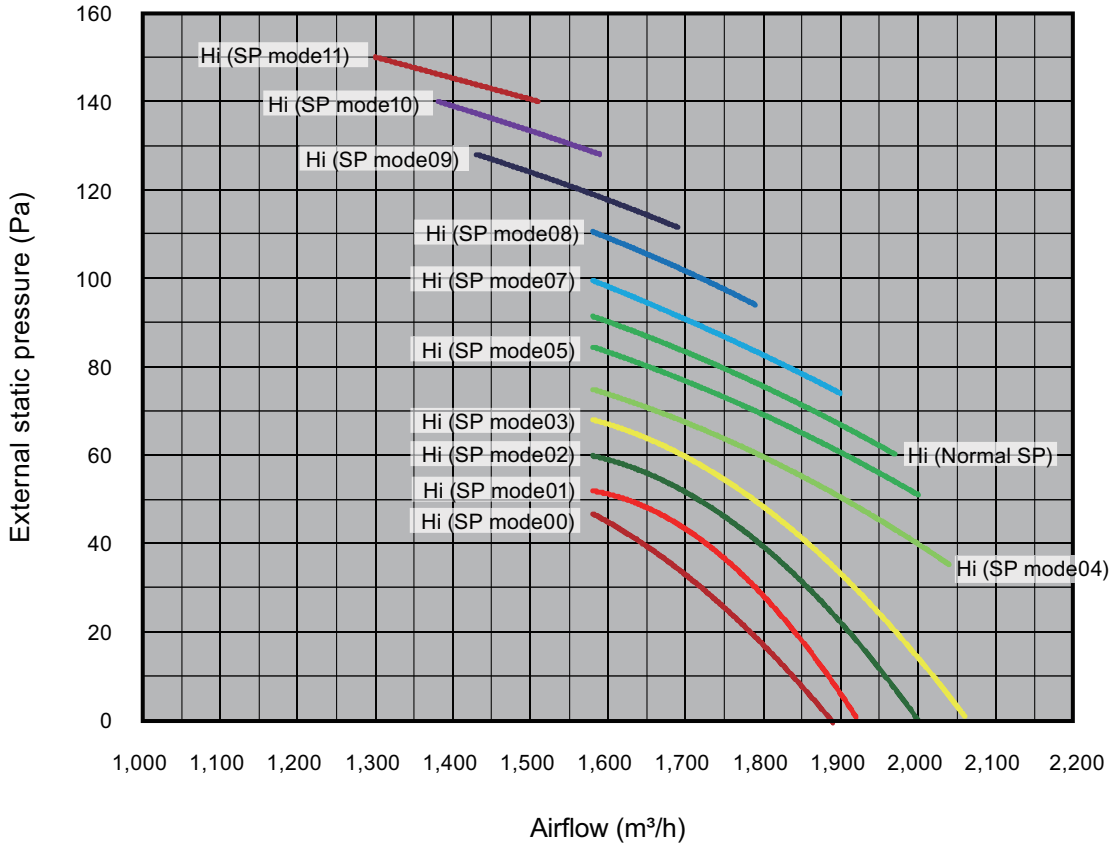

Cooling

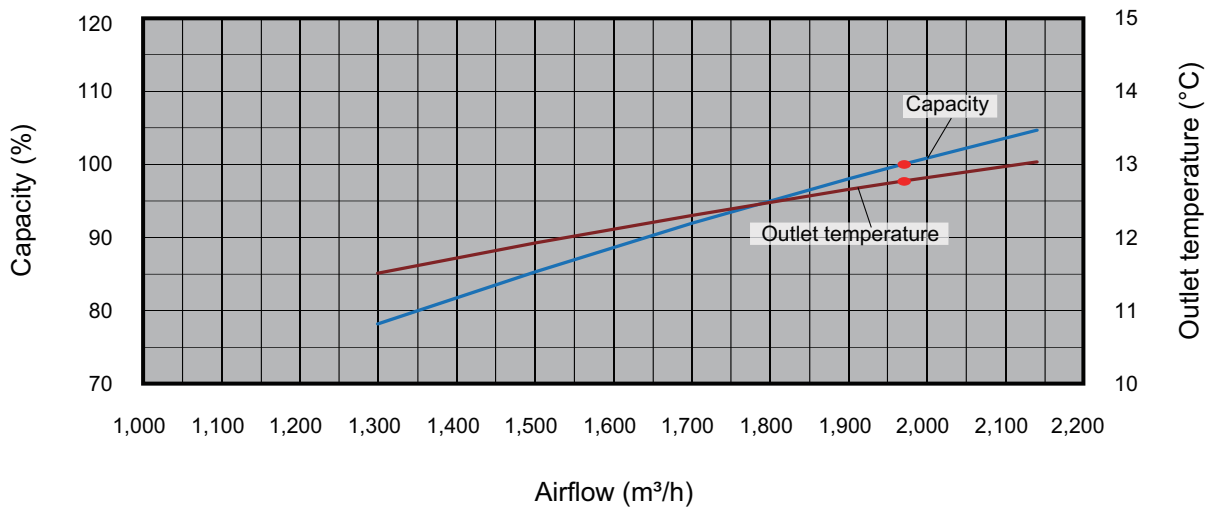

Heating

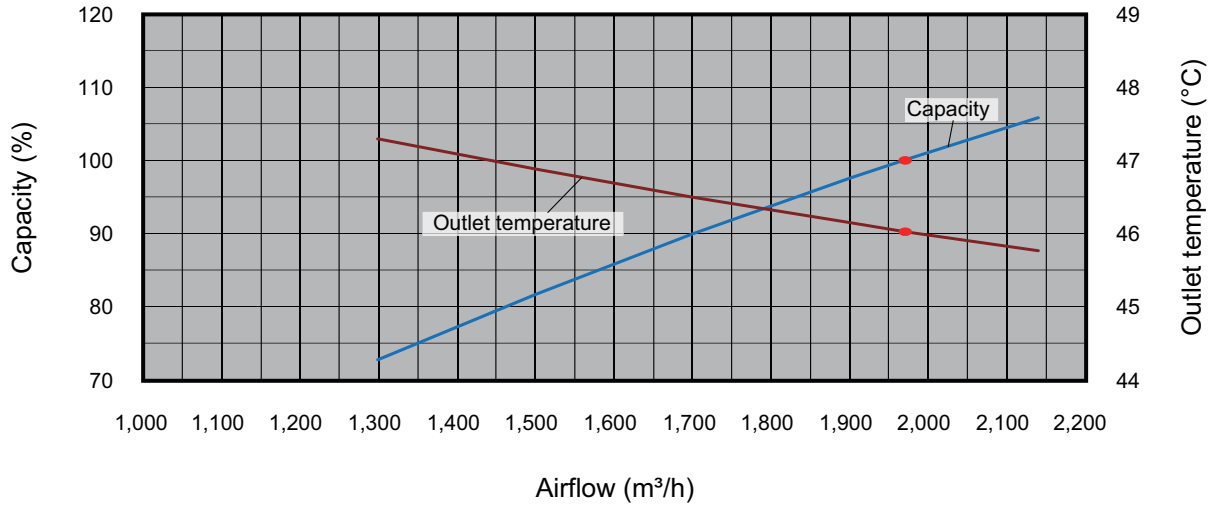

INDOOR UNITS

7-5. High static pressure duct type

■ Model: ARXC036GTEH

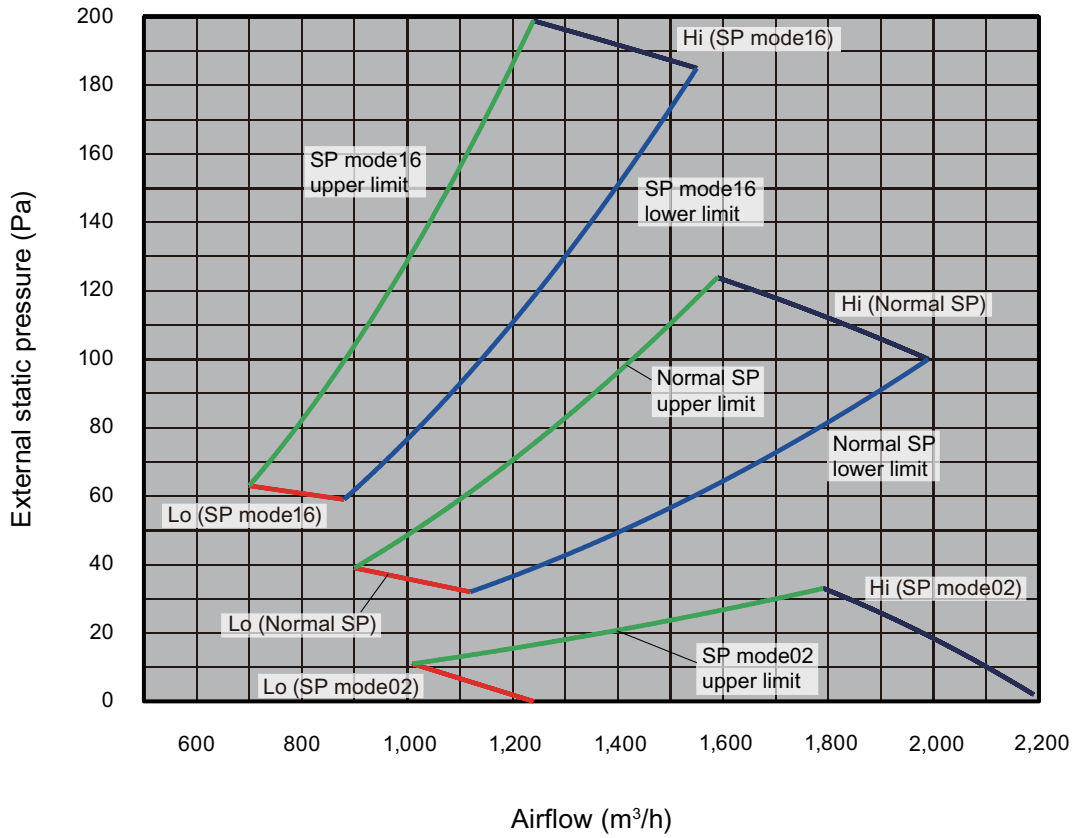

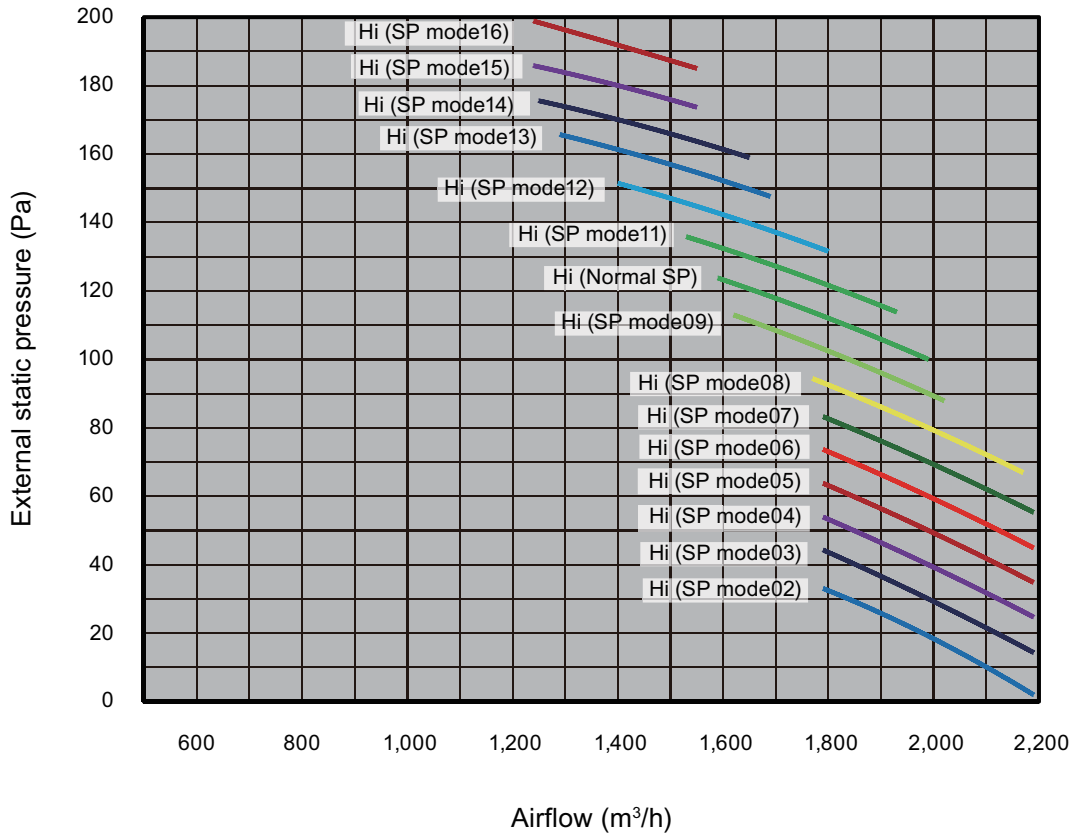

INDOOR UNITS

Cooling

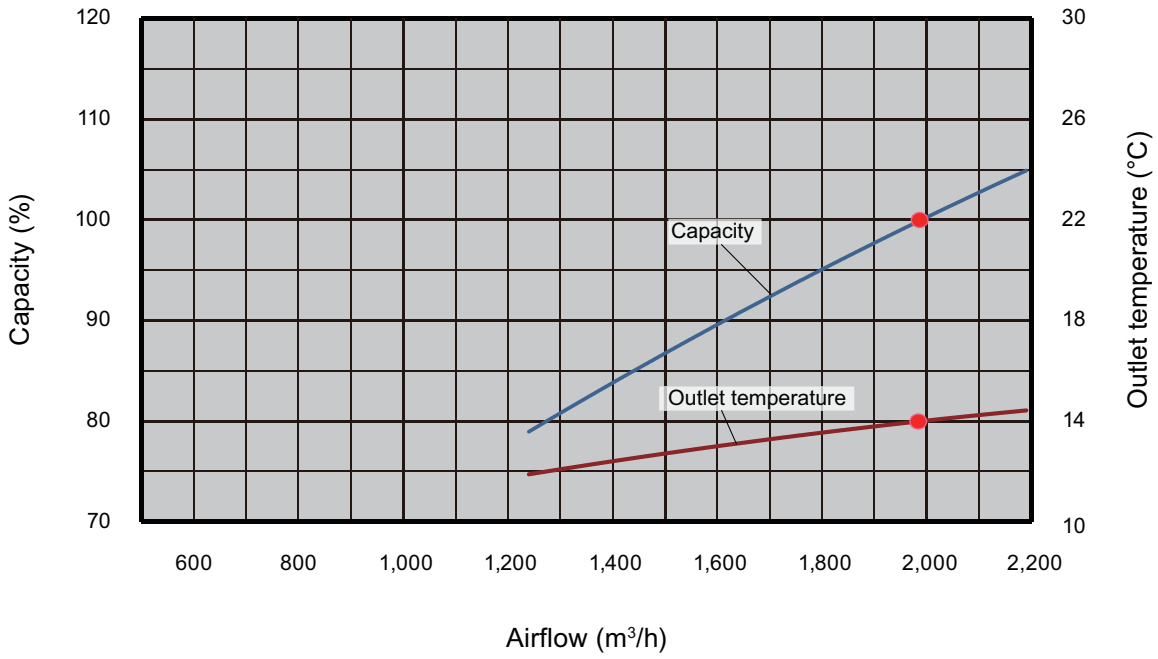

Heating

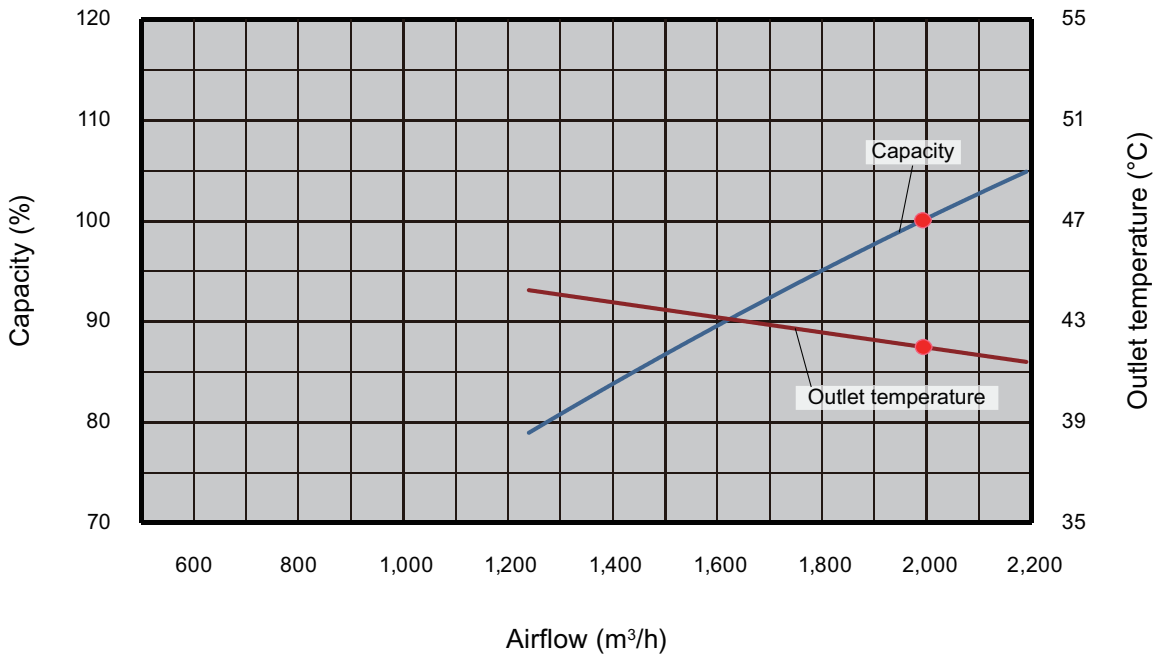

INDOOR UNITS

■ Model: ARXC045GTEH

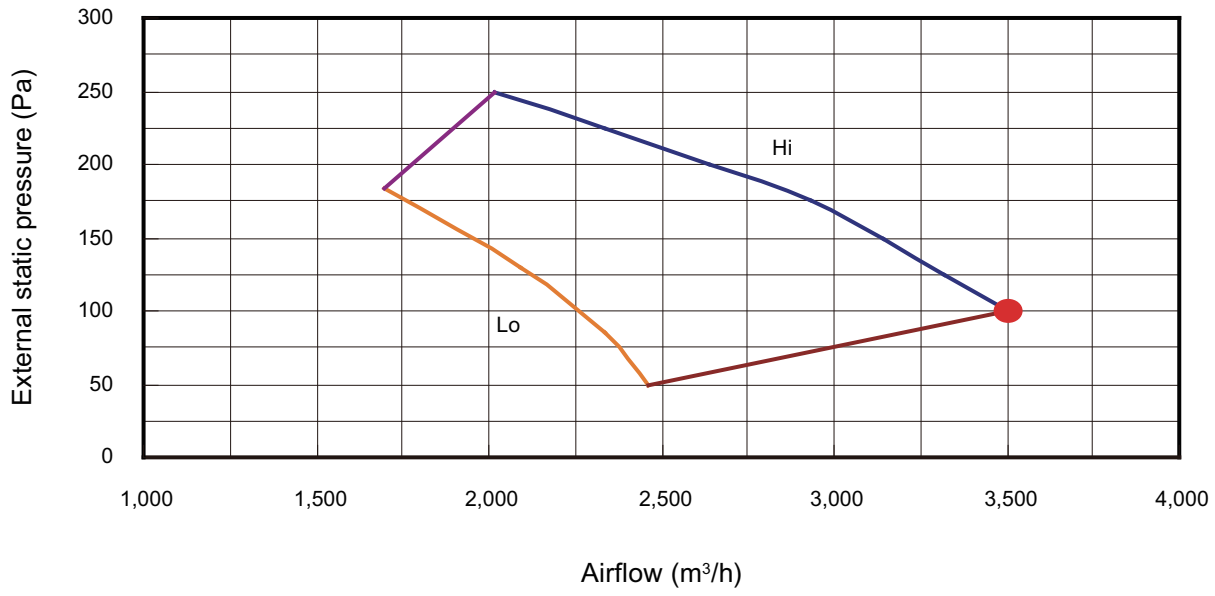

Cooling

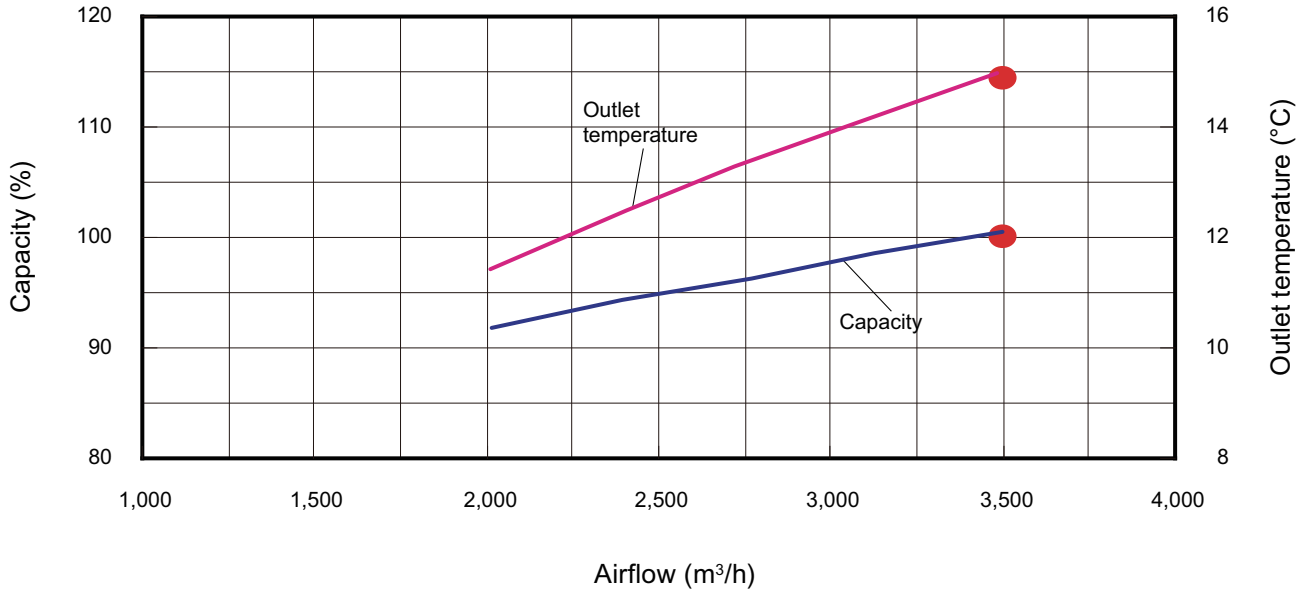

Heating

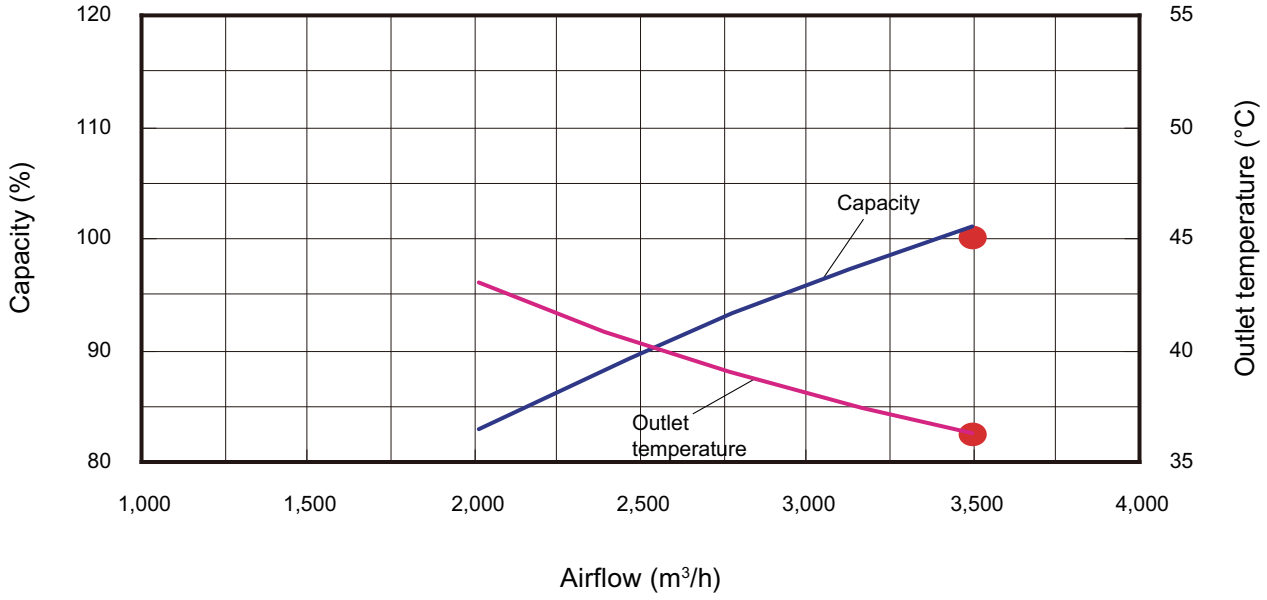

7-6. Fresh air characteristics

■ Circular flow cassette type and 4-way flow cassette type

● Airflow volume—Static pressure of fresh air intake characteristics

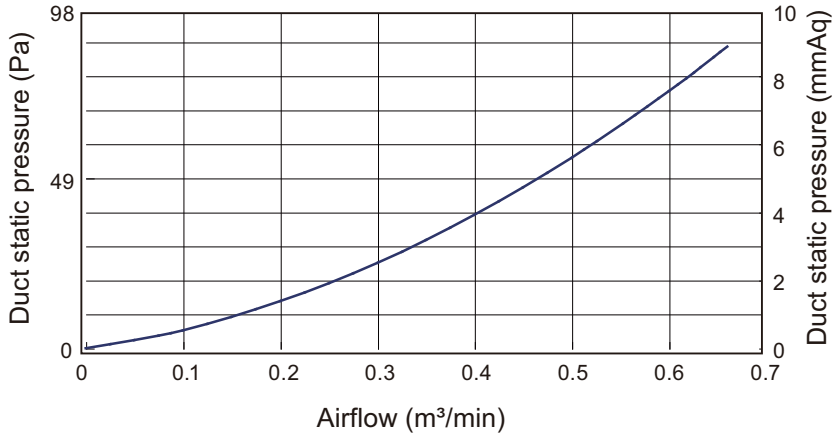

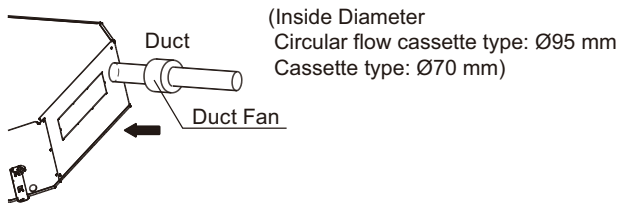

Static pressure required to take in fresh air

● Installation

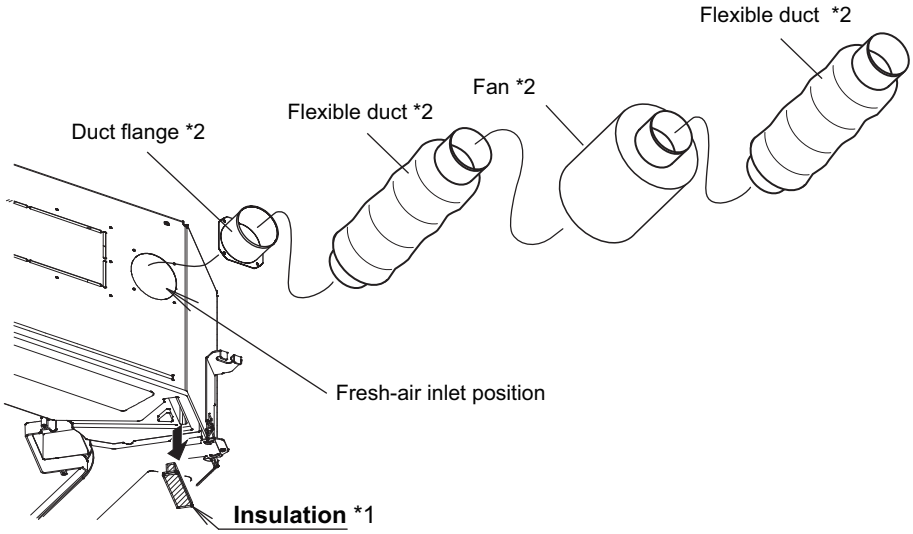

*1: In case of fresh-air intake, remove the insulation.

*2: Locally-purchased parts

For the fresh-air inlet position, refer to "Circular flow cassette type" on page 04-41 and "4-way flow cassette type" on page 04-38.

■ One way flow cassette type

● Airflow volume—Static pressure of fresh air intake characteristics

- Models: AUXV004GLEH, AUXV007GLEH, AUXV009GLEH, and AUXV012GLEH

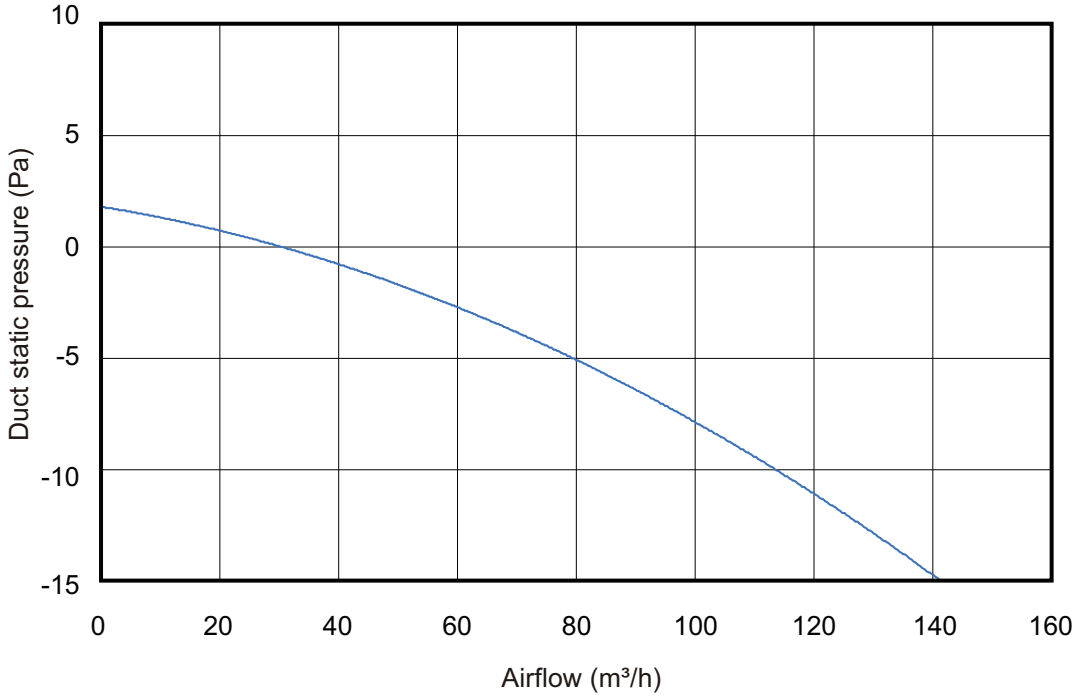

- Models: AUXV014GLEH, AUXV018GLEH, and AUXV024GLEH

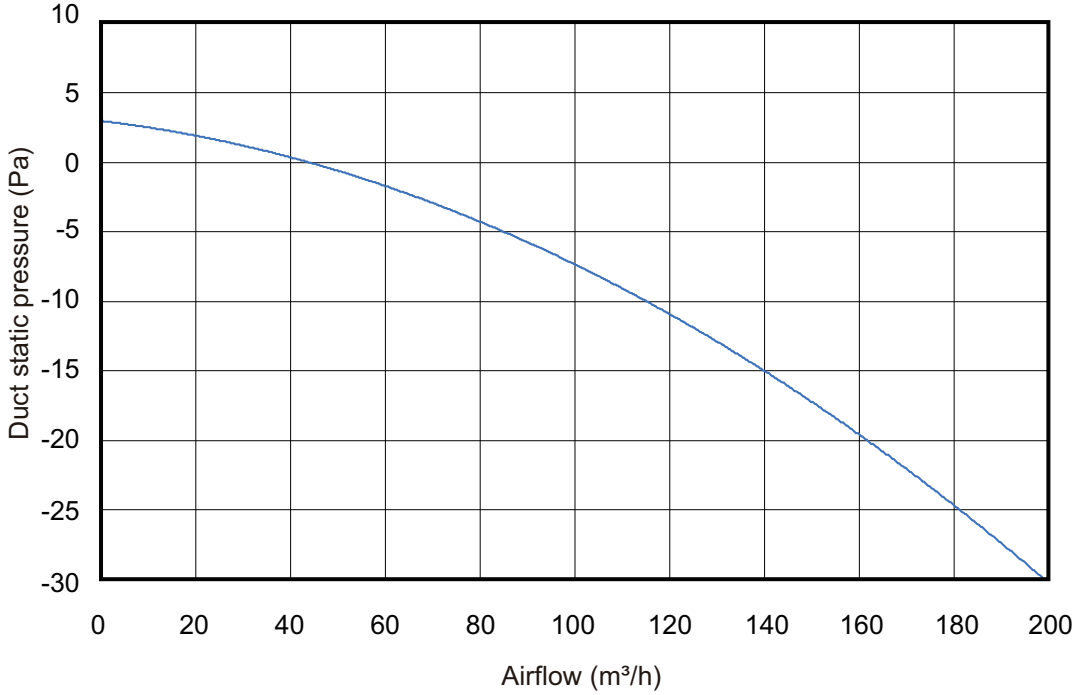

INDOOR UNITS

● How to read curve

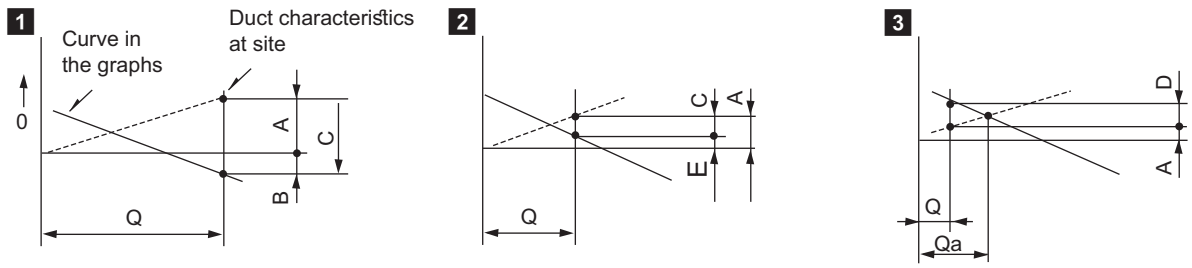

Q: Designed amount of fresh air intake (m^3/h)

A: Static pressure loss of fresh air intake duct system with airflow amount Q (Pa)

B: Forced static pressure at air conditioner inlet with airflow amount Q (Pa)

C: Static pressure of booster fan with airflow amount Q (Pa)

D: Static pressure loss increase amount of fresh air intake duct system for airflow amount Q (Pa)

E: Static pressure of indoor unit with airflow amount Q (Pa)

Qa: Estimated amount of fresh air intake without D (m^3/h)

● Installation

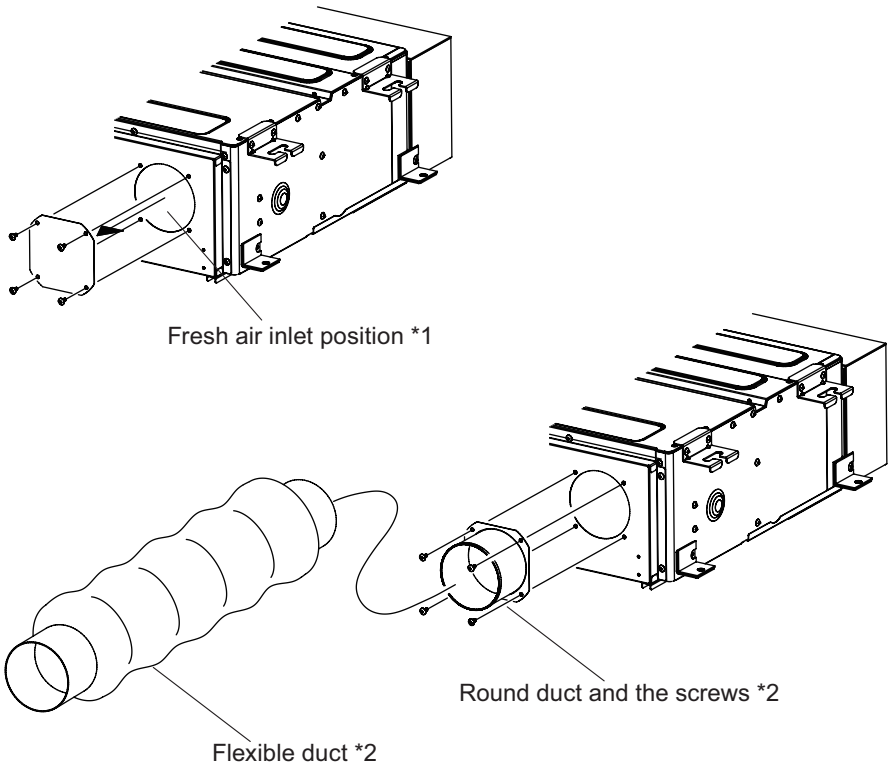

*1: Remove the 4 screws
*2: Locally purchased parts

NOTES:

- When taking in the fresh air, insulation is required to prevent product malfunction due to condensation.
- Temperature conditions
  - Condensation may form on the product when the outside air temperature is low and the temperature and humidity surrounding the product are high. Do not intake the air of below 0 °C into the Fresh air intake kit.
  - Do not take fresh air at a temperature that exceeds the upper limit of the operation temperature range of the outdoor unit.

■ Ceiling type

● Airflow volume—Static pressure of fresh air intake characteristics

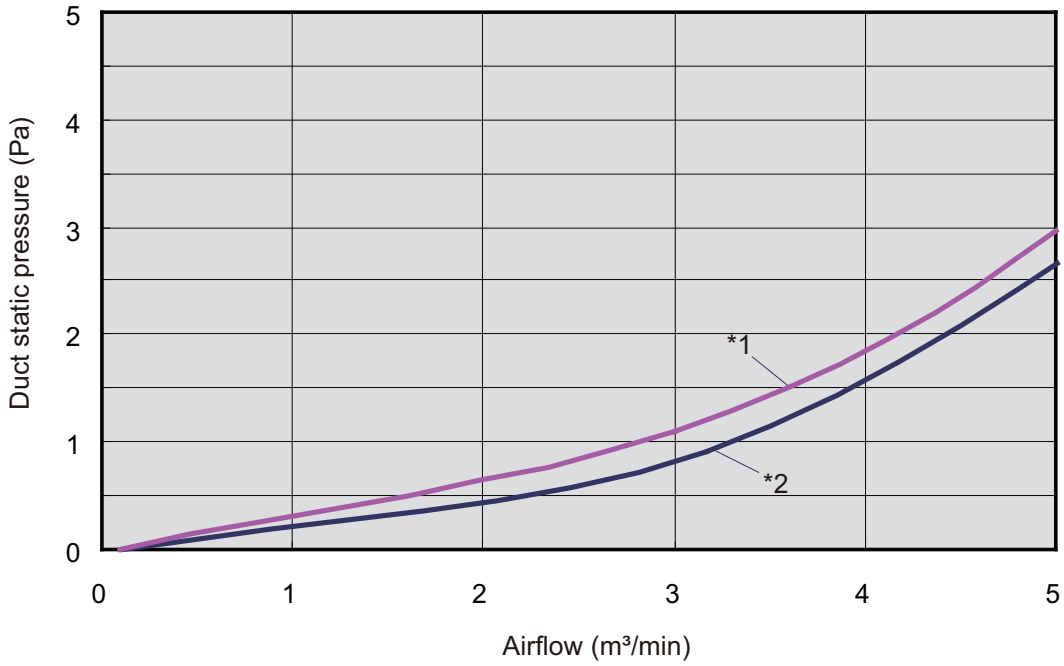

- *1: AB∗A030GTEH
- *2: AB∗A036GTEH, AB∗A045GTEH, and AB∗A054GTEH

● Installation

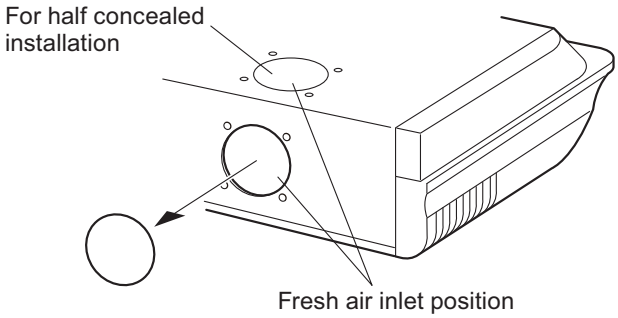

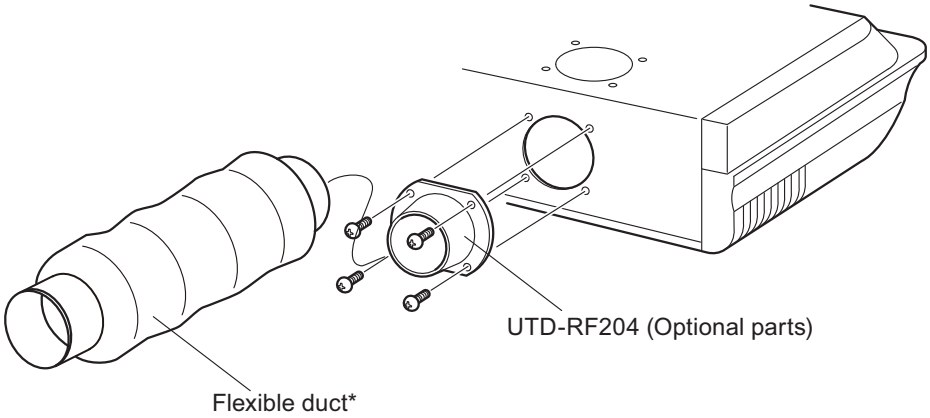

*: Locally purchased parts

For the fresh-air inlet position, refer to "Ceiling type" on page 04-68.

INDOOR UNITS

8. Airflow

Conversion factor:

- 1 m^3/h = 0.2778 l/s = 0.5886 CFM
- 3.6 m^3/h = 1 l/s
- 1.699 m^3/h = 1 CFM

8-1. Compact cassette type

Model	Mode	Airflow		
		m^3/h	l/s	CFM
AUXB004GLEH	HIGH*1	530/530	147/147	312/312
	MED—HIGH*1	490/480	136/133	288/283
	MED*1	450/430	125/119	265/253
	MED—LOW*1	420/380	117/106	265/224
	LOW*1	390/340	108/94	230/200
	QUIET*1	350/300	97/83	206/177
AUXB007GLEH	HIGH	540	150	318
	MED—HIGH	500	139	294
	MED	460	128	265
	MED—LOW	420	117	247
	LOW	390	108	206
	QUIET	350	97	206
AUXB009GLEH	HIGH	550	153	324
	MED—HIGH	520	144	306
	MED	460	128	265
	MED—LOW	440	122	259
	LOW	390	111	206
	QUIET	350	97	206
AUXB012GLEH	HIGH	600	167	353
	MED—HIGH	560	156	330
	MED	520	144	312
	MED—LOW	480	133	283
	LOW	430	119	253
	QUIET	390	108	230
AUXB014GLEH	HIGH	680	189	400
	MED—HIGH	620	172	365
	MED	560	156	347
	MED—LOW	500	139	294
	LOW	430	119	230
	QUIET	390	108	230
AUXB018GLEH	HIGH	710	197	418
	MED—HIGH	660	183	388
	MED	590	164	341
	MED—LOW	520	144	306
	LOW	460	128	235
	QUIET	400	111	235
AUXB024GLEH	HIGH	1,030	286	606
	MED—HIGH	910	253	536
	MED	790	219	489
	MED—LOW	680	189	400
	LOW	560	156	265
	QUIET	450	125	265

*1: This value is “Cooling operation/Heating operation”.

INDOOR UNITS

8-2. 4-way flow cassette type

Model	Mode	Airflow		
		m^3/h	l/s	CFM
AUXD18GALH	HIGH	1,150	319	677
	MED	940	261	553
	LOW	870	242	512
AUXD24GALH	HIGH	1,280	356	753
	MED	1,040	289	612
	LOW	870	242	512
AUXA30GALH	HIGH	1,600	444	942
	MED	1,300	361	765
	LOW	1,100	306	647
AUXA34GALH	HIGH	1,750	486	1,030
	MED	1,300	361	765
	LOW	1,100	306	647
AUXA36GALH	HIGH	1,800	500	1,059
	MED	1,300	361	765
	LOW	1,100	306	647
AUXA45GALH	HIGH	1,900	528	1,059
	MED	1,370	381	765
	LOW	1,100	306	647
AUXA54GALH	HIGH	2,000	556	1,118
	MED	1,370	381	806
	LOW	1,100	306	647

INDOOR UNITS

8-3. Circular flow cassette type

Model	Mode	Airflow		
		m^3/h	l/s	CFM
AUXN009GLAH	HIGH	1,050	292	618
	MED—HIGH	930	258	547
	MED	900	250	530
	MED—LOW	870	242	512
	LOW	810	225	477
	QUIET	780	217	459
AUXN012GLAH	HIGH	1,050	292	618
	MED—HIGH	930	258	547
	MED	900	250	530
	MED—LOW	870	242	512
	LOW	810	225	477
	QUIET	780	217	459
AUXN014GLAH	HIGH	1,050	292	618
	MED—HIGH	930	258	547
	MED	900	250	530
	MED—LOW	870	242	512
	LOW	810	225	477
	QUIET	780	217	459
AUXM018GLEH	HIGH	1,050	292	618
	MED—HIGH	930	258	547
	MED	900	250	530
	MED—LOW	870	242	512
	LOW	810	225	447
	QUIET	780	217	459
AUXM024GLEH	HIGH	1,120	311	659
	MED—HIGH	1,050	292	618
	MED	930	258	547
	MED—LOW	900	250	530
	LOW	870	242	512
	QUIET	780	217	459
AUXM030GLEH	HIGH	1,470	408	865
	MED—HIGH	1,160	322	683
	MED	1,070	297	630
	MED—LOW	930	258	547
	LOW	900	250	530
	QUIET	780	217	459
AUXK018GLEH	HIGH	1,420	394	836
	MED—HIGH	1,360	378	800
	MED	1,300	361	765
	MED—LOW	1,270	353	748
	LOW	1,200	333	706
	QUIET	1,150	319	677
AUXK024GLEH	HIGH	1,420	394	836
	MED—HIGH	1,360	378	800
	MED	1,300	361	765
	MED—LOW	1,270	353	748
	LOW	1,200	333	706
	QUIET	1,150	319	677

INDOOR UNITS

Model	Mode	Airflow		
		m^3/h	l/s	CFM
AUXK030GLEH	HIGH	1,440	400	848
	MED—HIGH	1,400	389	824
	MED	1,340	372	789
	MED—LOW	1,300	361	765
	LOW	1,280	356	753
	QUIET	1,150	319	677
AUXK034GLEH	HIGH	1,440	400	848
	MED—HIGH	1,400	389	824
	MED	1,340	372	789
	MED—LOW	1,300	361	765
	LOW	1,280	356	753
	QUIET	1,150	319	677
AUXK036GLEH	HIGH	1,620	450	954
	MED—HIGH	1,500	417	883
	MED	1,400	389	824
	MED—LOW	1,340	372	789
	LOW	1,280	356	753
	QUIET	1,150	319	677
AUXK045GLEH	HIGH	1,820	506	1,071
	MED—HIGH	1,590	442	936
	MED	1,500	417	883
	MED—LOW	1,400	389	824
	LOW	1,300	361	765
	QUIET	1,150	319	677
AUXK054GLEH	HIGH	2,040	567	1,201
	MED—HIGH	1,800	500	1,059
	MED	1,590	442	936
	MED—LOW	1,440	400	848
	LOW	1,300	361	765
	QUIET	1,150	319	677

INDOOR UNITS

8-4. 3D flow cassette type

Model	Mode	Airflow		
		m^3/h	l/s	CFM
AUXS018GLEH	HIGH*1	750/870	208/242	441/512
	MED—HIGH*1	710/830	197/231	418/489
	MED*1	690/780	192/217	406/459
	MED—LOW*1	660/740	183/206	388/436
	LOW*1	630/700	175/194	371/412
	QUIET*1	540/540	150/150	318/318
AUXS024GLEH	HIGH*1	950/1,040	264/289	559/612
	MED—HIGH*1	890/990	247/275	524/583
	MED*1	860/930	239/258	506/547
	MED—LOW*1	810/880	225/244	477/518
	LOW*1	770/840	214/233	453/494
	QUIET*1	540/540	150/150	318/318

*1: This value is “Cooling operation/Heating operation”.

8-5. One way flow cassette type

Model	Mode	Airflow		
		m^3/h	l/s	CFM
AUXV004GLEH	HIGH	460	128	271
	MED—HIGH	440	122	259
	MED	420	117	247
	MED—LOW	400	111	235
	LOW	380	106	224
	QUIET	360	100	212
AUXV007GLEH	HIGH	550	153	324
	MED—HIGH	440	122	259
	MED	420	117	247
	MED—LOW	400	111	235
	LOW	380	106	224
	QUIET	360	100	212
AUXV009GLEH	HIGH	550	153	324
	MED—HIGH	440	122	259
	MED	420	117	247
	MED—LOW	400	111	235
	LOW	380	106	224
	QUIET	360	100	212
AUXV012GLEH	HIGH	670	186	394
	MED—HIGH	520	144	306
	MED	480	133	283
	MED—LOW	450	125	265
	LOW	410	114	241
	QUIET	360	100	212
AUXV014GLEH	HIGH	720	200	424
	MED—HIGH	660	183	388
	MED	630	175	371
	MED—LOW	600	167	353
	LOW	580	161	341
	QUIET	550	153	324
AUXV018GLEH	HIGH	890	247	524
	MED—HIGH	840	233	494
	MED	770	214	453
	MED—LOW	710	197	418
	LOW	660	183	388
	QUIET	580	161	341
AUXV024GLEH	HIGH	1,150	319	677
	MED—HIGH	1,020	283	600
	MED	940	261	553
	MED—LOW	790	219	465
	LOW	700	194	412
	QUIET	610	169	359

INDOOR UNITS

8-6. Low static pressure duct (Mini duct) type

Model	Mode	Airflow		
		m^3/h	l/s	CFM
ARXK004GLGH	HIGH	460	128	271
	MED—HIGH	440	122	259
	MED	420	117	247
	MED—LOW	400	111	235
	LOW	370	103	218
	QUIET	340	94	200
ARXK007GLGH	HIGH	460	128	271
	MED—HIGH	440	122	259
	MED	420	117	247
	MED—LOW	400	111	235
	LOW	370	103	218
	QUIET	340	94	200
ARXK009GLGH	HIGH	460	128	271
	MED—HIGH	440	122	259
	MED	420	117	247
	MED—LOW	400	111	235
	LOW	370	103	218
	QUIET	340	94	200
ARXK012GLGH	HIGH	550	153	324
	MED—HIGH	520	144	306
	MED	480	133	283
	MED—LOW	450	125	265
	LOW	410	114	241
	QUIET	340	94	200
ARXK014GLGH	HIGH	760	211	447
	MED—HIGH	660	183	388
	MED	560	156	330
	MED—LOW	490	136	288
	LOW	410	114	241
	QUIET	340	94	200
ARXK018GLGH	HIGH	930	258	547
	MED—HIGH	840	233	494
	MED	740	206	436
	MED—LOW	640	178	377
	LOW	540	150	318
	QUIET	470	131	277
ARXK024GLGH	HIGH	1,160	322	683
	MED—HIGH	1,060	294	624
	MED	960	267	565
	MED—LOW	860	239	506
	LOW	750	208	441
	QUIET	610	169	359

INDOOR UNITS

8-7. Low static pressure duct (Slim duct)/Slim concealed floor type

Model	Mode	Airflow		
		m^3/h	l/s	CFM
ARXD007GLEH	HIGH	550	153	324
	MED—HIGH	480	133	283
	MED	440	122	288
	MED—LOW	410	114	241
	LOW	370	103	259
	QUIET	320	89	188
ARXD009GLEH	HIGH	600	167	353
	MED—HIGH	510	142	300
	MED	460	128	324
	MED—LOW	420	117	300
	LOW	370	103	283
	QUIET	320	89	188
ARXD012GLEH	HIGH	600	167	353
	MED—HIGH	530	147	312
	MED	490	136	300
	MED—LOW	450	125	265
	LOW	410	114	241
	QUIET	340	94	200
ARXD014GLEH	HIGH	800	222	471
	MED—HIGH	680	189	400
	MED	600	167	418
	MED—LOW	520	144	306
	LOW	440	122	359
	QUIET	340	94	200
ARXD018GLEH	HIGH	940	261	553
	MED—HIGH	820	228	483
	MED	730	203	494
	MED—LOW	630	175	371
	LOW	540	150	441
	QUIET	470	131	277
ARXD024GLEH	HIGH	1,330	369	783
	MED—HIGH	1,140	317	671
	MED	1,020	283	730
	MED—LOW	900	250	530
	LOW	780	217	647
	QUIET	610	169	359

*1: This value is “Cooling operation/Heating operation”.

INDOOR UNITS

8-8. Low static pressure duct type (High efficiency)

Model	Mode	Airflow		
		m^3/h	l/s	CFM
ARXP018GLFH	HIGH*1	1,540/1,440	428/400	906/848
	MED—HIGH*1	1,460/1,380	406/383	859/812
	MED*1	1,380/1,320	383/367	812/777
	MED—LOW*1	1,300/1260	361/350	765/742
	LOW*1	1,220/1,200	339/333	718/706
	QUIET*1	1,150/1,150	319/319	677/677
ARXP030GLFH	HIGH*1	1,940/1,660	539/461	1,142/977
	MED—HIGH*1	1,810/1,580	503/439	1,065/930
	MED*1	1,680/1,510	467/419	989/889
	MED—LOW*1	1,550/1,440	431/400	912/848
	LOW*1	1,420/1,370	394/381	836/806
	QUIET*1	1,300/1,300	361/361	765/765

*1: This value is “Cooling operation/Heating operation”.

INDOOR UNITS

8-9. Medium static pressure duct type

Model	Mode	Airflow		
		m^3/h	l/s	CFM
ARXA024GLEH	HIGH	1,280	356	753
	MED—HIGH	1,180	328	695
	MED	1,090	303	642
	MED—LOW	1,000	278	589
	LOW	920	256	542
	QUIET	840	233	494
ARXA030GLEH	HIGH	1,410	392	830
	MED—HIGH	1,350	375	795
	MED	1,280	356	753
	MED—LOW	1,240	344	730
	LOW	1,190	331	700
	QUIET	1,150	319	677
ARXA036GLEH	HIGH	1,840	511	1,083
	MED—HIGH	1,750	486	1,030
	MED	1,660	461	977
	MED—LOW	1,600	444	942
	LOW	1,530	425	901
	QUIET	1,470	408	865
ARXA045GLEH	HIGH	1,970	547	1,160
	MED—HIGH	1,910	531	1,124
	MED	1,860	517	1,095
	MED—LOW	1,780	494	1,048
	LOW	1,710	475	1,007
	QUIET	1,640	456	965

INDOOR UNITS

8-10. High static pressure duct type

Model	Mode	Airflow		
		m^3/h	l/s	CFM
ARXC036GTEH	HIGH	1,990	553	1,171
	MED	1,680	467	989
	LOW	1,330	369	783
ARXC045GTEH	HIGH	3,500	972	2,060
	MED	3,000	833	1,766
	LOW	2,460	683	1,448

INDOOR UNITS

8-11. Compact floor type

Model	Mode	Airflow		
		m^3/h	l/s	CFM
AG∗A004GCGH	HIGH*1	380/430	106/119	224/253
	MED—HIGH	350	97	206
	MED	320	89	188
	MED—LOW	310	86	182
	LOW	280	78	165
	QUIET	210	58	124
AG∗A007GCGH	HIGH	470	131	277
	MED—HIGH	420	117	247
	MED	390	108	230
	MED—LOW	360	100	212
	LOW	330	92	194
	QUIET	270	75	159
AG∗A009GCGH	HIGH	500	139	294
	MED—HIGH	450	125	265
	MED	400	111	235
	MED—LOW	360	100	212
	LOW	330	92	194
	QUIET	270	75	159
AG∗A012GCGH	HIGH	590	164	347
	MED—HIGH	520	144	306
	MED	470	131	277
	MED—LOW	420	117	247
	LOW	390	108	230
	QUIET	340	94	200
AG∗A014GCGH	HIGH	670	186	394
	MED—HIGH	590	164	347
	MED	520	144	306
	MED—LOW	450	125	265
	LOW	390	108	230
	QUIET	340	94	200

*1: This value is “Cooling operation/Heating operation”.

INDOOR UNITS

8-12. Compact floor type (EEV external model)

Model	Mode	Airflow		
		m^3/h	l/s	CFM
AG∗E004GCEH	HIGH*1	380/430	106/119	224/253
	MED—HIGH	350	97	206
	MED	320	89	188
	MED—LOW	310	86	182
	LOW	280	78	165
	QUIET	210	58	124
AG∗E007GCEH	HIGH	470	131	277
	MED—HIGH	420	117	247
	MED	390	108	230
	MED—LOW	360	100	212
	LOW	330	92	194
	QUIET	270	75	159
AG∗E009GCEH	HIGH	500	139	294
	MED—HIGH	450	125	265
	MED	400	111	235
	MED—LOW	360	100	212
	LOW	330	92	194
	QUIET	270	75	159
AG∗E012GCEH	HIGH	590	164	347
	MED—HIGH	520	144	306
	MED	470	131	277
	MED—LOW	420	117	247
	LOW	390	108	230
	QUIET	340	94	200
AG∗E014GCEH	HIGH	670	186	394
	MED—HIGH	590	164	347
	MED	520	144	306
	MED—LOW	450	125	265
	LOW	390	108	230
	QUIET	340	94	200

*1: This value is “Cooling operation/Heating operation”.

INDOOR UNITS

8-13. Floor/Ceiling type

Model	Mode	Airflow		
		m^3/h	l/s	CFM
AB∗A012GTEH	HIGH	660	183	388
	MED—HIGH	620	172	365
	MED	580	161	341
	MED—LOW	550	153	324
	LOW	520	144	306
	QUIET	490	136	288
AB∗A014GTEH	HIGH	780	217	459
	MED—HIGH	740	206	436
	MED	690	192	406
	MED—LOW	640	178	377
	LOW	600	167	353
	QUIET	550	153	324
AB∗A018GTEH	HIGH	1,000	278	589
	MED—HIGH	910	253	536
	MED	830	231	489
	MED—LOW	750	208	441
	LOW	660	183	388
	QUIET	580	161	341
AB∗A024GTEH	HIGH	1,000	278	589
	MED—HIGH	930	258	547
	MED	870	242	512
	MED—LOW	800	222	471
	LOW	740	206	436
	QUIET	680	189	400

INDOOR UNITS

8-14. Ceiling type

Model	Mode	Airflow		
		m^3/h	l/s	CFM
AB∗A030GTEH	HIGH	1,630	453	960
	MED—HIGH	1,520	422	895
	MED	1,420	394	807
	MED—LOW	1,320	367	777
	LOW	1,220	339	718
	QUIET	1,140	317	671
AB∗A036GTEH	HIGH	1,690	469	995
	MED—HIGH	1,560	433	918
	MED	1,450	403	824
	MED—LOW	1,360	378	800
	LOW	1,270	353	748
	QUIET	1,170	325	689
AB∗A045GTEH	HIGH	2,010	558	1,183
	MED—HIGH	1,840	511	1,083
	MED	1,690	469	942
	MED—LOW	1,530	425	901
	LOW	1,380	383	812
	QUIET	1,230	342	724
AB∗A054GTEH	HIGH	2,270	631	1,337
	MED—HIGH	2,070	575	1,218
	MED	1,860	517	1,095
	MED—LOW	1,660	461	977
	LOW	1,470	408	865
	QUIET	1,280	356	753

INDOOR UNITS

8-15. Wall mounted type

Model	Mode	Airflow		
		m^3/h	l/s	CFM
AS∗A004GCGH	HIGH	450	125	265
	MED—HIGH	430	119	253
	MED	400	111	235
	MED—LOW	380	106	224
	LOW	360	100	212
	QUIET	310	86	182
AS∗A007GCGH	HIGH	550	153	324
	MED—HIGH	510	142	300
	MED	470	131	277
	MED—LOW	410	114	241
	LOW	360	100	212
	QUIET	310	86	182
AS∗A009GCGH	HIGH	610	169	359
	MED—HIGH	560	156	330
	MED	510	142	300
	MED—LOW	440	122	259
	LOW	360	100	212
	QUIET	310	86	182
AS∗A012GCGH	HIGH	690	192	406
	MED—HIGH	610	169	359
	MED	560	156	330
	MED—LOW	530	147	312
	LOW	470	131	277
	QUIET	330	92	194
AS∗A014GCGH	HIGH	800	222	471
	MED—HIGH	740	206	436
	MED	680	189	400
	MED—LOW	610	169	359
	LOW	550	153	324
	QUIET	330	92	194
AS∗A18GBCH	HIGH	840	233	495
	MED	770	214	453
	LOW	690	192	406
AS∗A24GBCH	HIGH	1,100	306	647
	MED	910	253	536
	LOW	730	203	430
AS∗A030GTEH	HIGH	1,440	400	848
	MED—HIGH	1,200	333	706
	MED	1,050	292	618
	MED—LOW	940	261	553
	LOW	890	247	524
	QUIET	700	194	412
AS∗A034GTEH	HIGH*1	1,620/1,520	450/422	954/895
	MED—HIGH	1,300	361	765
	MED	1,120	311	659
	MED—LOW	980	272	577
	LOW	890	247	524
	QUIET	700	194	412

*1: This value is “Cooling operation/Heating operation”.

INDOOR UNITS

8-16. Wall mounted type (EEV external model)

Model	Mode	Airflow		
		m^3/h	l/s	CFM
AS∗E004GCEH	HIGH	450	125	265
	MED—HIGH	430	119	253
	MED	400	111	235
	MED—LOW	380	106	224
	LOW	360	100	212
	QUIET	310	86	182
AS∗E007GCEH	HIGH	550	153	324
	MED—HIGH	510	142	300
	MED	470	131	277
	MED—LOW	410	114	241
	LOW	360	100	212
	QUIET	310	86	182
AS∗E009GCEH	HIGH	610	169	359
	MED—HIGH	560	156	330
	MED	510	142	300
	MED—LOW	440	122	259
	LOW	360	100	212
	QUIET	310	86	182
AS∗E012GCEH	HIGH	690	192	406
	MED—HIGH	610	169	359
	MED	560	156	330
	MED—LOW	530	147	312
	LOW	470	131	277
	QUIET	330	92	194
AS∗E014GCEH	HIGH	800	222	471
	MED—HIGH	740	206	436
	MED	680	189	400
	MED—LOW	610	169	359
	LOW	550	153	324
	QUIET	330	92	194

INDOOR UNITS

9. Noise level curve

9-1. Compact cassette type

- **Model: AUXB004GLEH**

Cooling

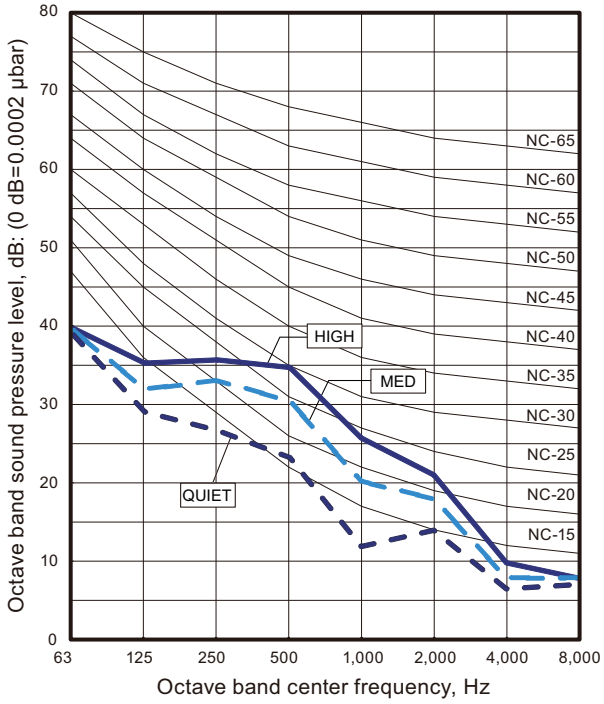

Heating

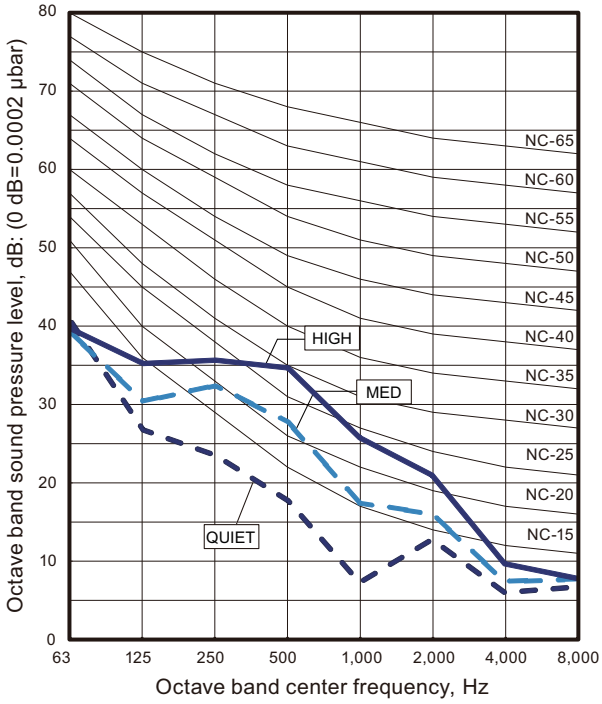

- **Model: AUXB007GLEH**

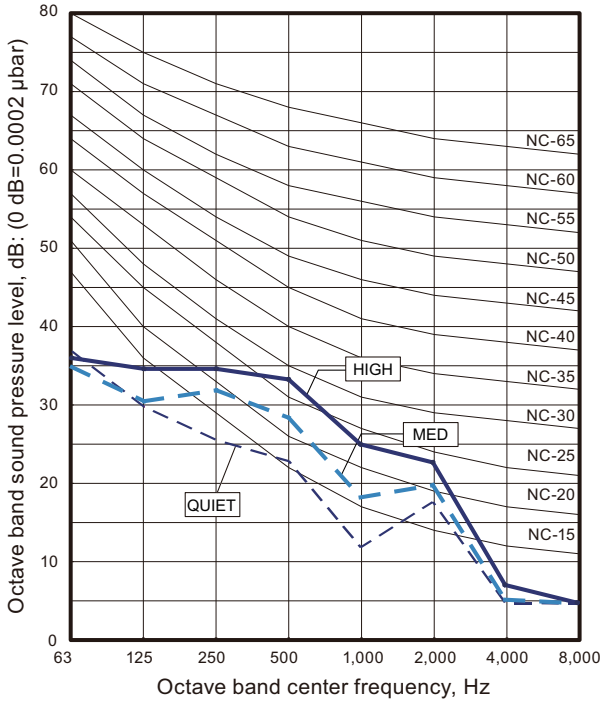

- **Model: AUXB009GLEH**

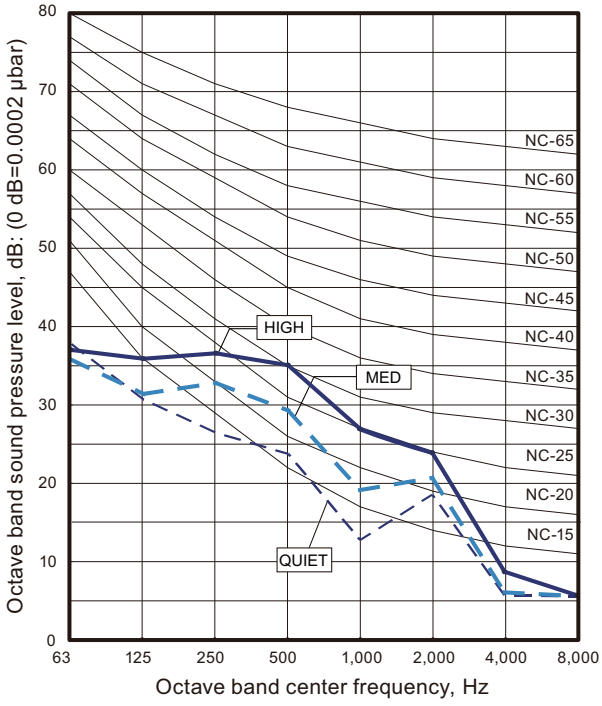

INDOOR UNITS

- **Model: AUXB012GLEH**

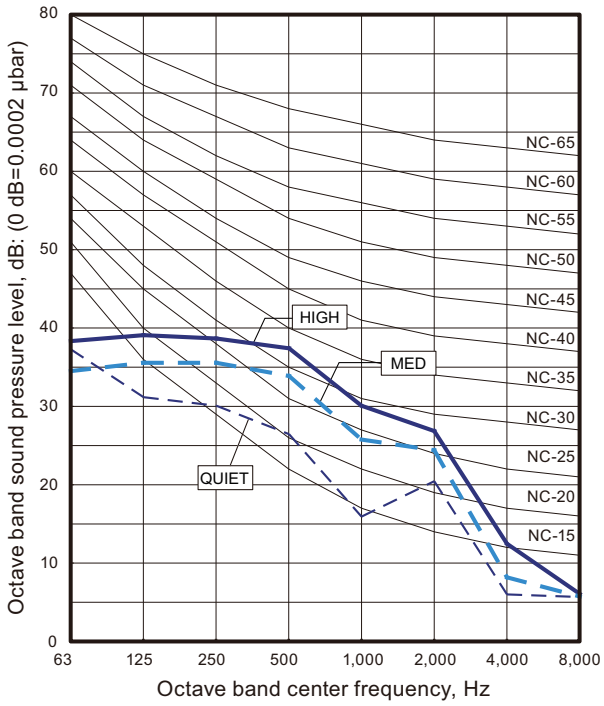

- **Model: AUXB014GLEH**

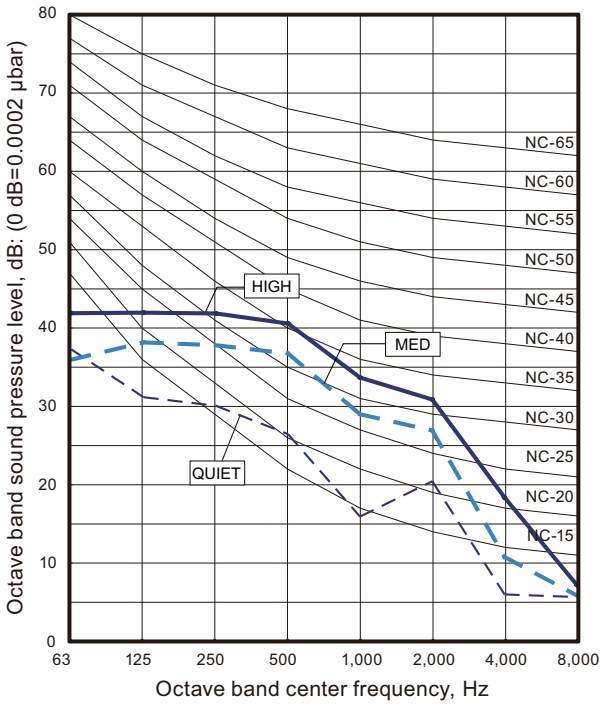

- **Model: AUXB018GLEH**

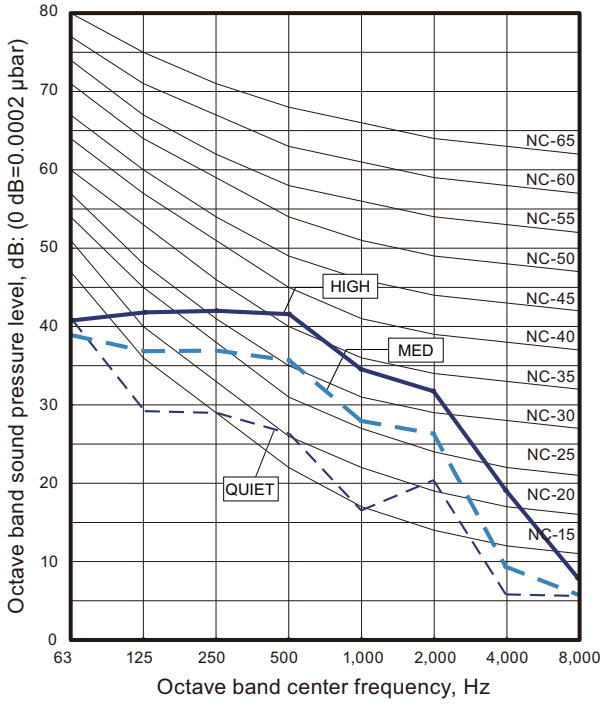

- **Model: AUXB024GLEH**

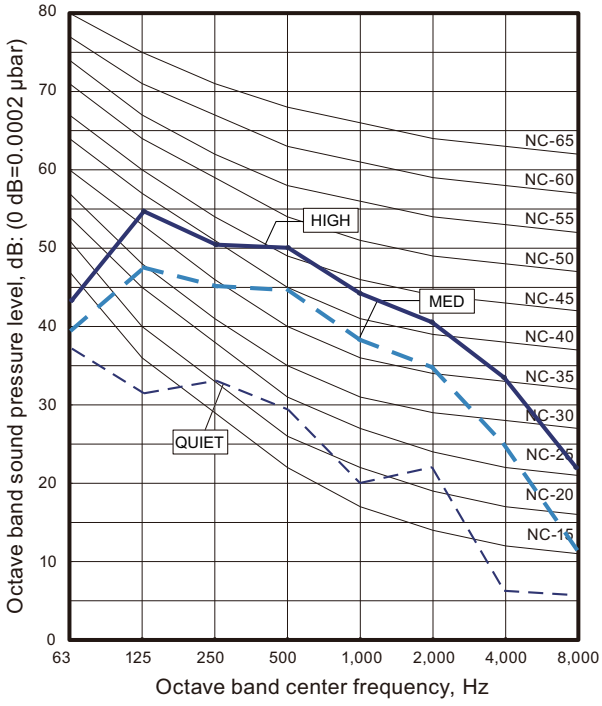

INDOOR UNITS

INDOOR UNITS

9-2. 4-way flow cassette type

- **Model: AUXD18GALH**

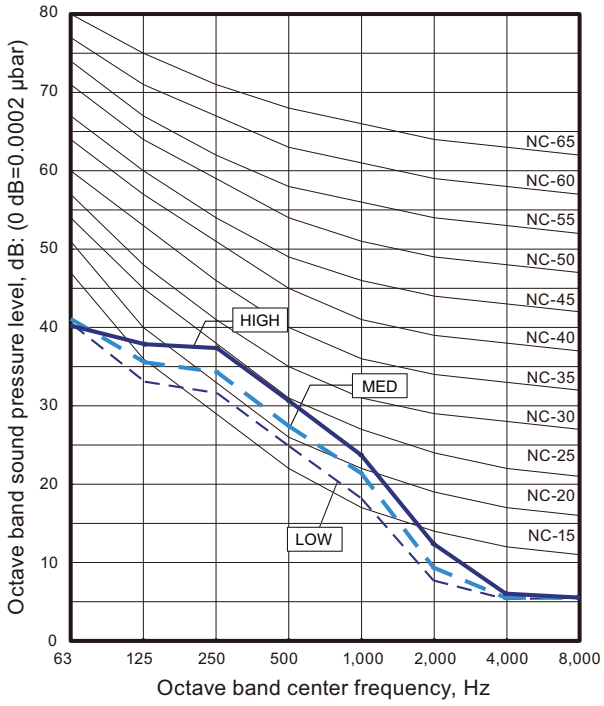

- **Model: AUXD24GALH**

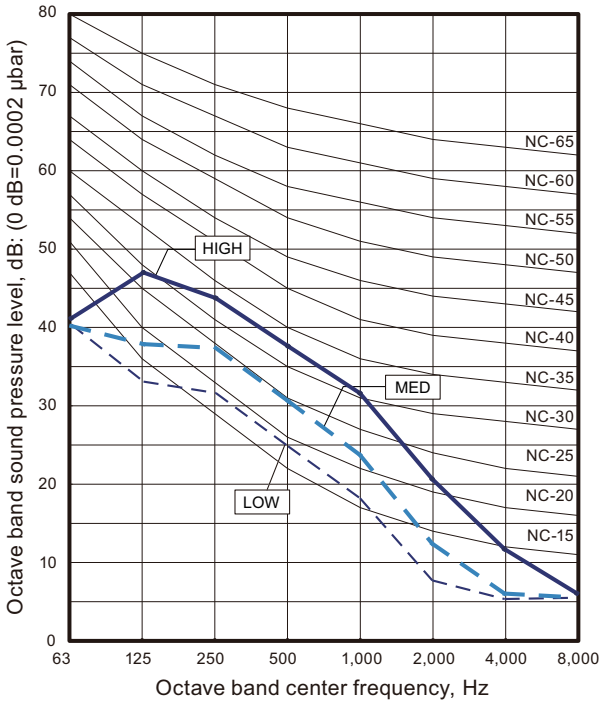

- **Model: AUXA30GALH**

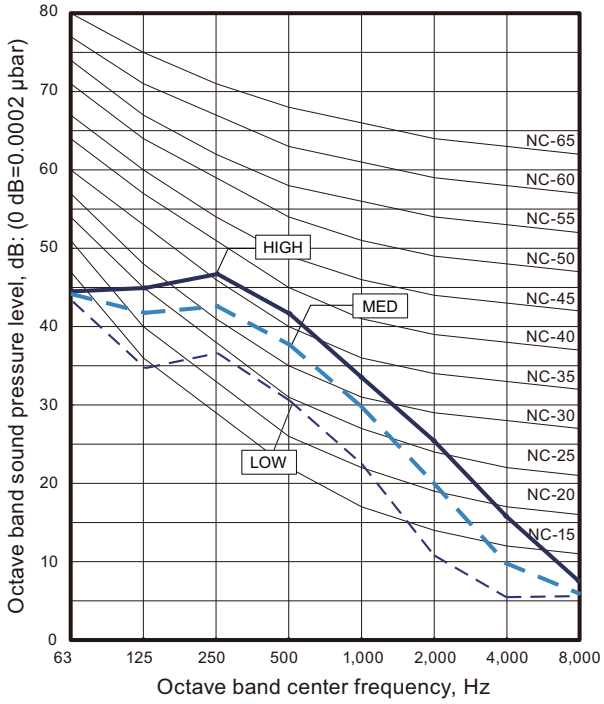

INDOOR UNITS

INDOOR UNITS

- **Model: AUXA34GALH**

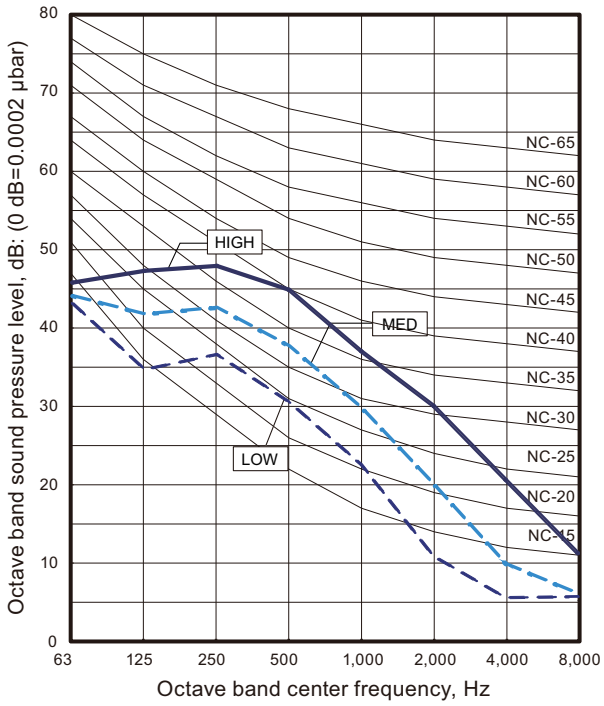

- **Model: AUXA36GALH**

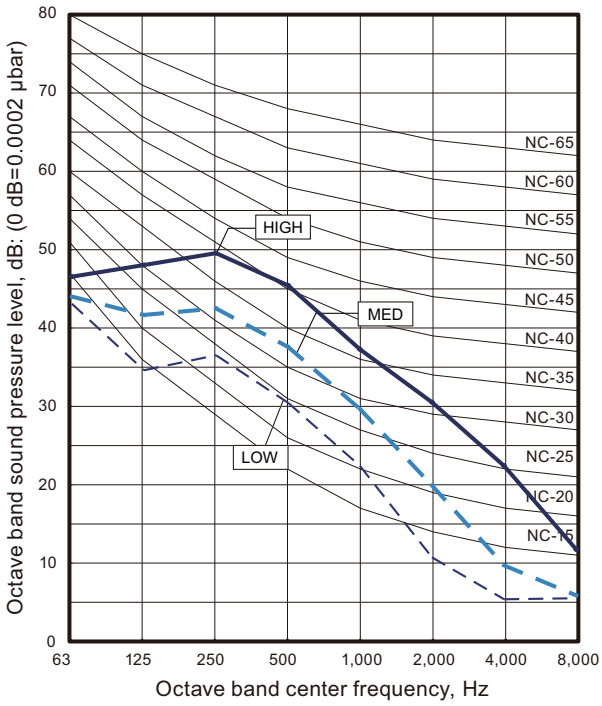

- **Model: AUXA45GALH**

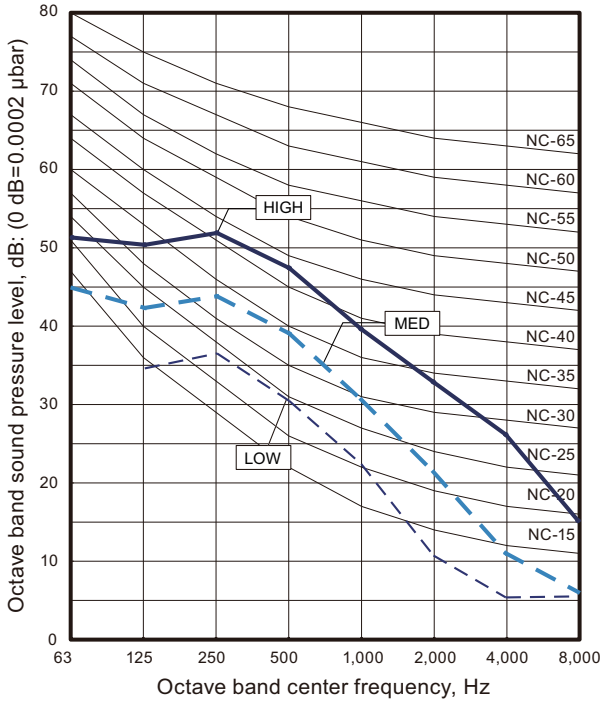

- **Model: AUXA54GALH**

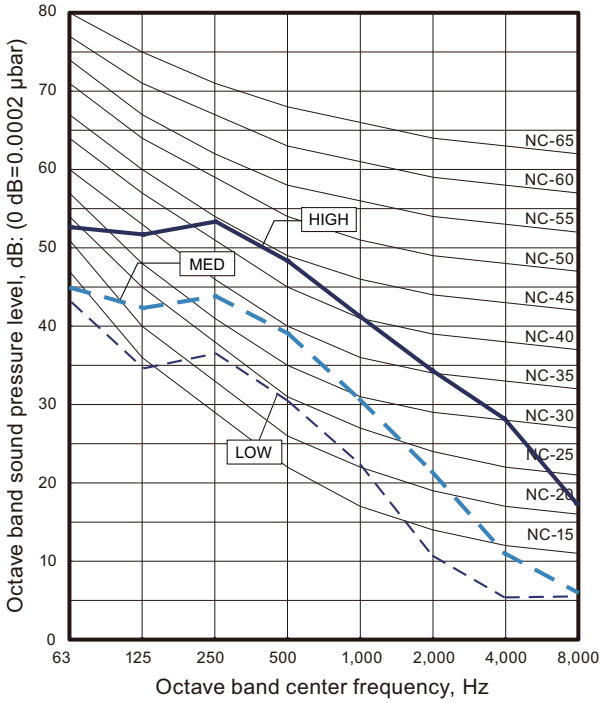

INDOOR UNITS

INDOOR UNITS

9-3. Circular flow cassette type

- **Models: AUXN009GLAH, AUXN012GLAH, AUXN014GLAH, and AUXM018GLEH**

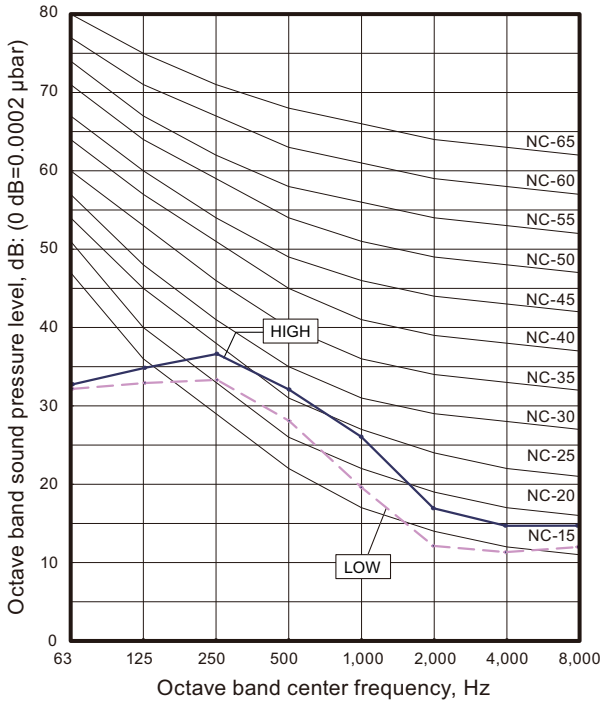

- **Model: AUXM024GLEH**

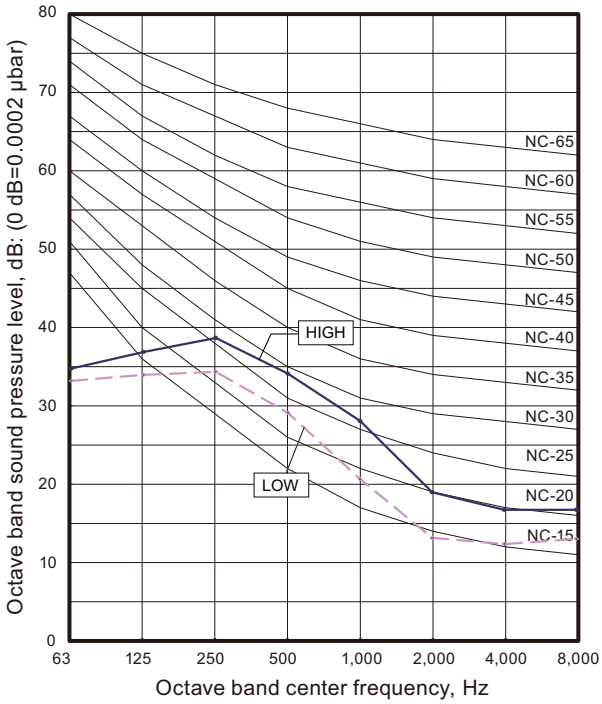

- **Model: AUXM030GLEH**

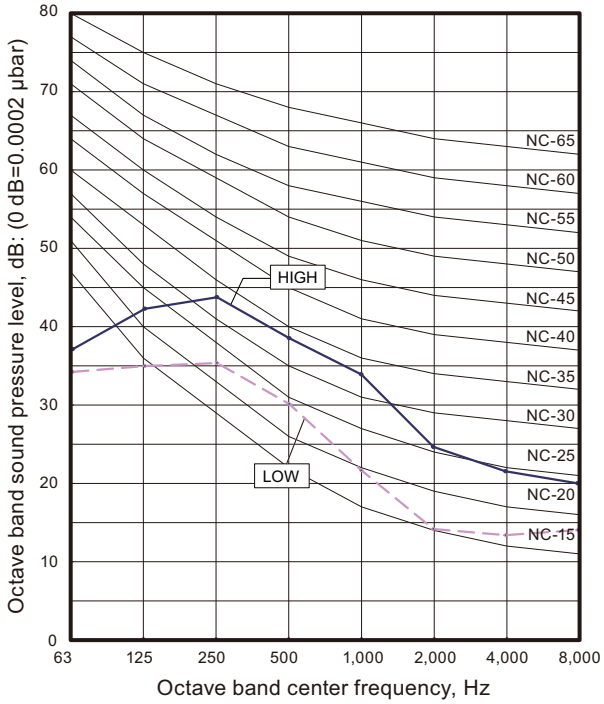

- **Models: AUXK018GLEH and AUXK024GLEH**

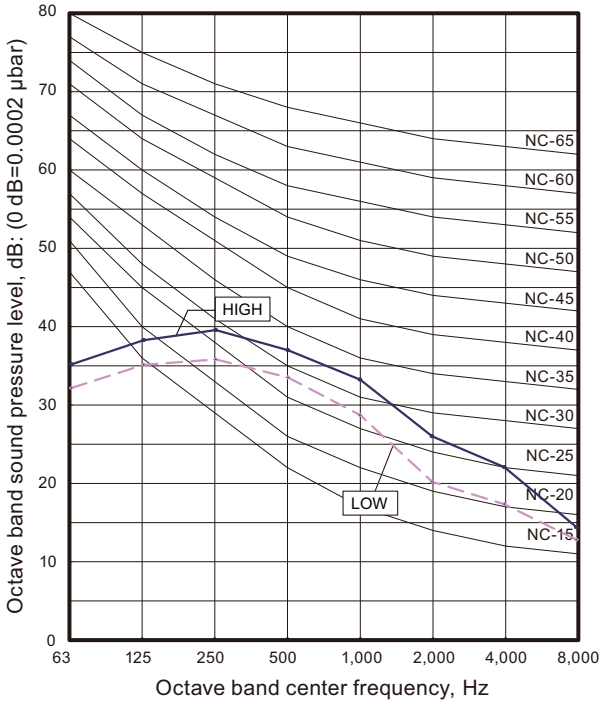

- **Models: AUXK030GLEH and AUXK034GLEH**

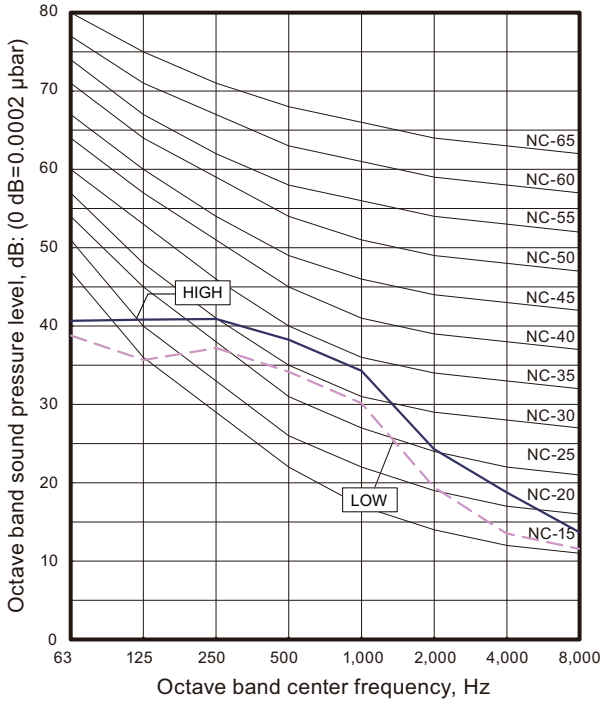

- **Model: AUXK036GLEH**

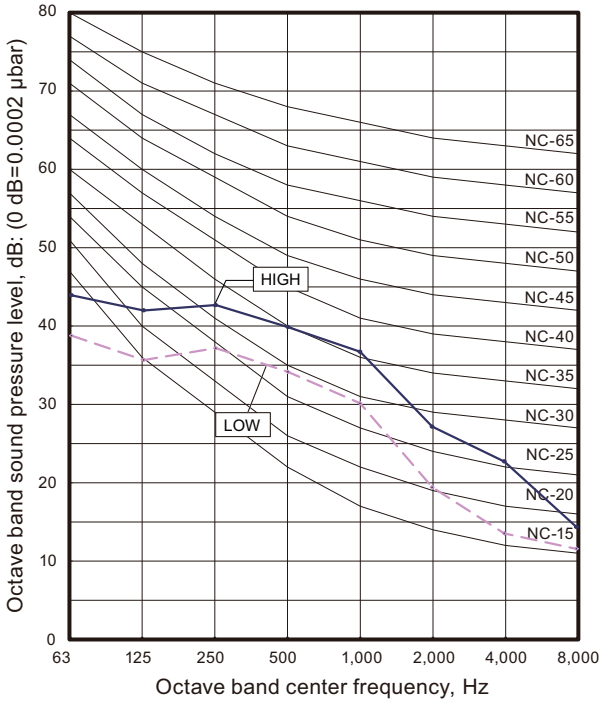

- **Model: AUXK045GLEH**

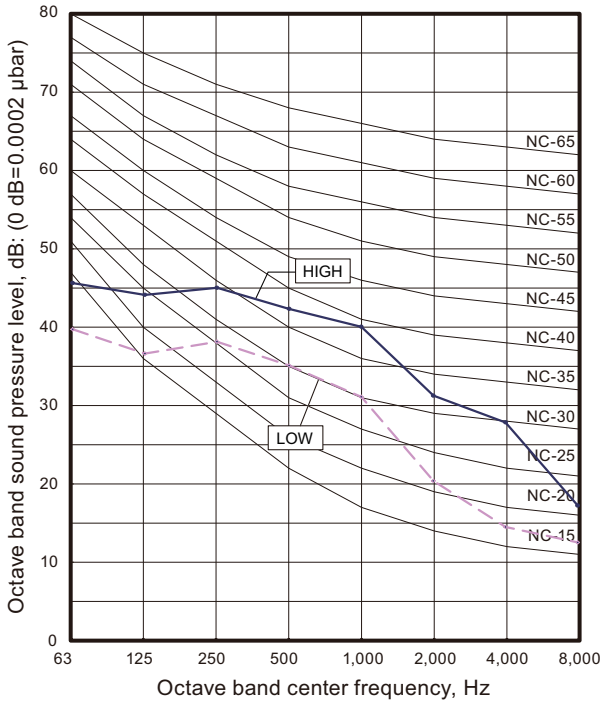

- **Model: AUXK054GLEH**

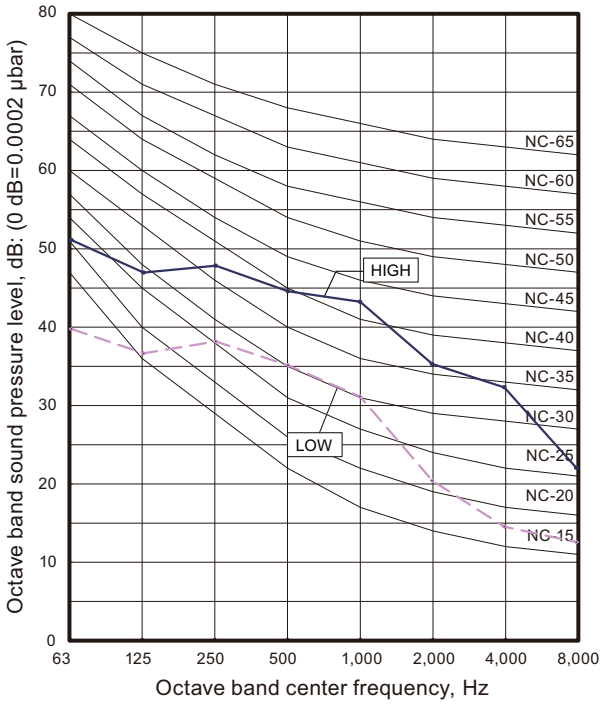

INDOOR UNITS

INDOOR UNITS

9-4. 3D flow cassette type

- **Model: AUXS018GLEH**

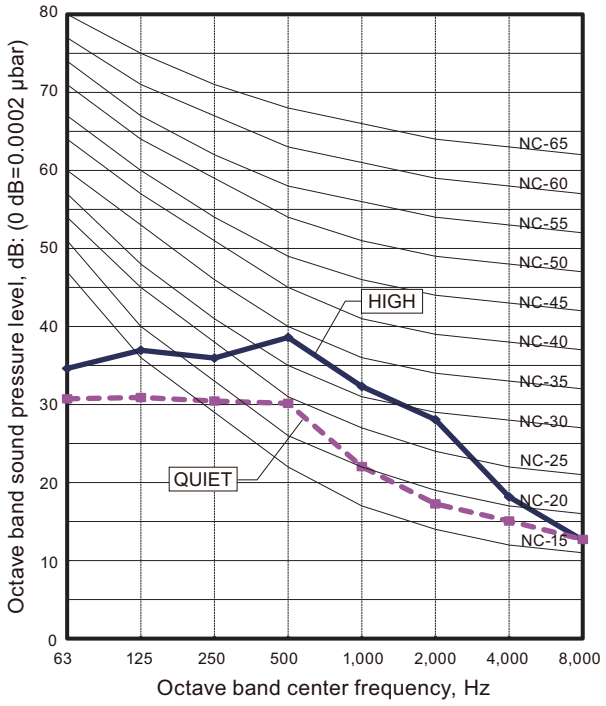

- **Model: AUXS024GLEH**

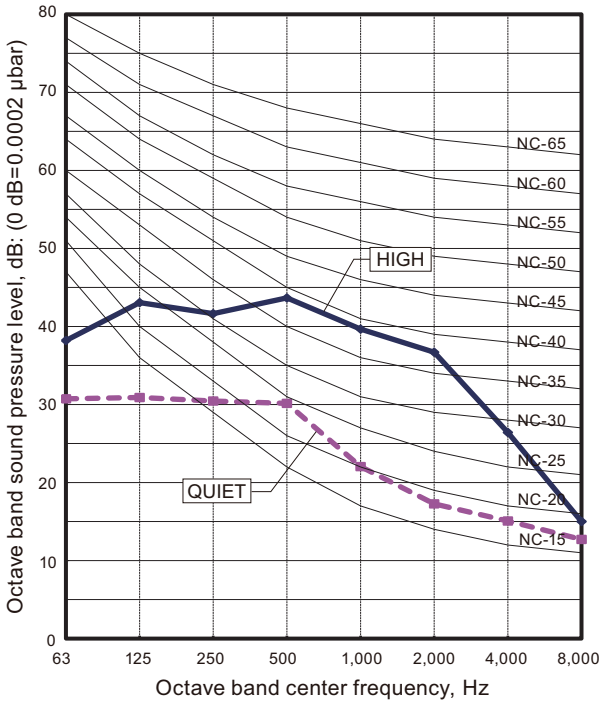

INDOOR UNITS

INDOOR UNITS

9-5. One way flow cassette type

- **Model: AUXV004GLEH**

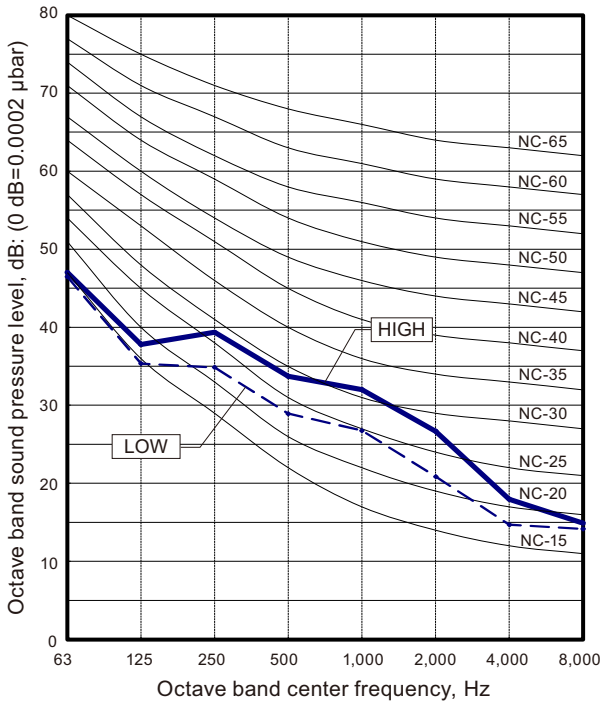

- **Models: AUXV007GLEH and AUXV009GLEH**

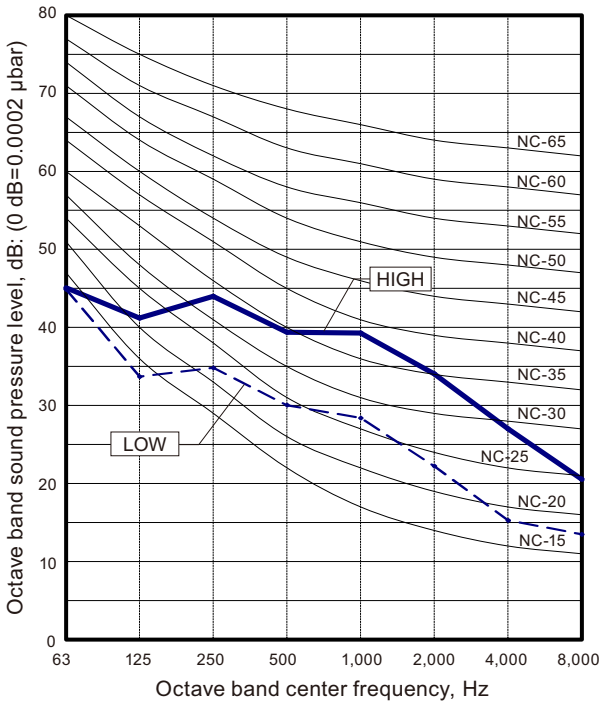

- **Model: AUXV012GLEH**

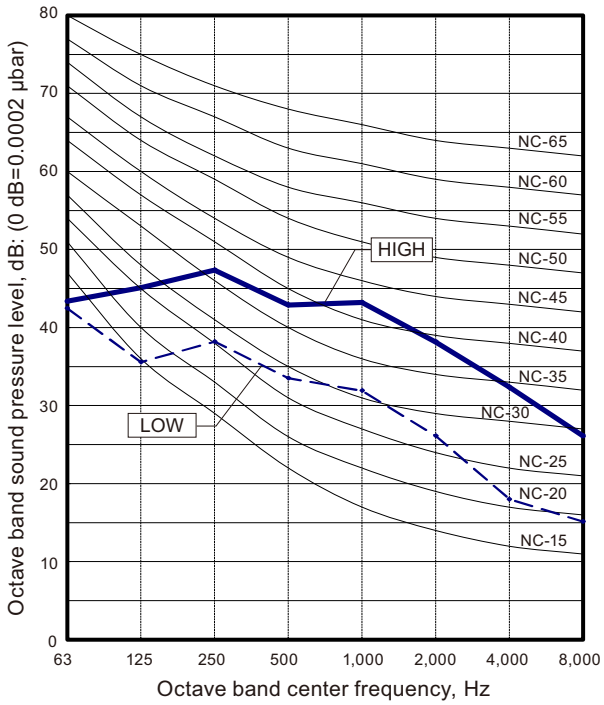

- **Model: AUXV014GLEH**

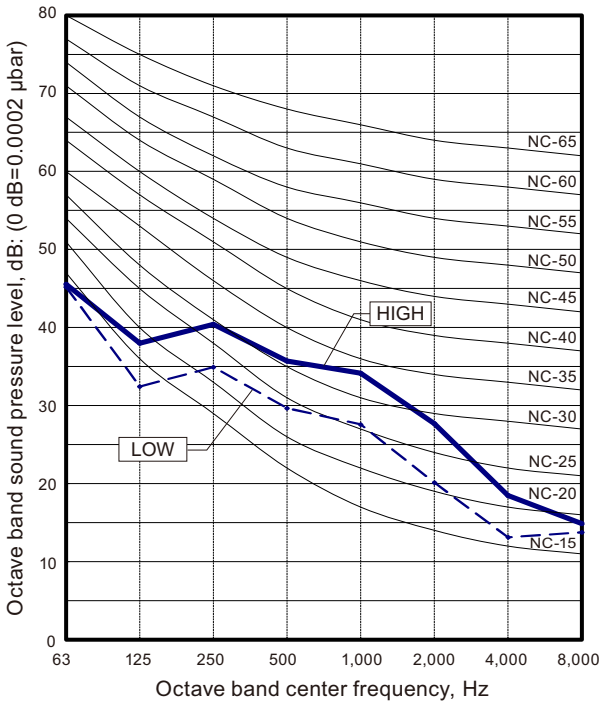

INDOOR UNITS

INDOOR UNITS

- **Model: AUXV018GLEH**

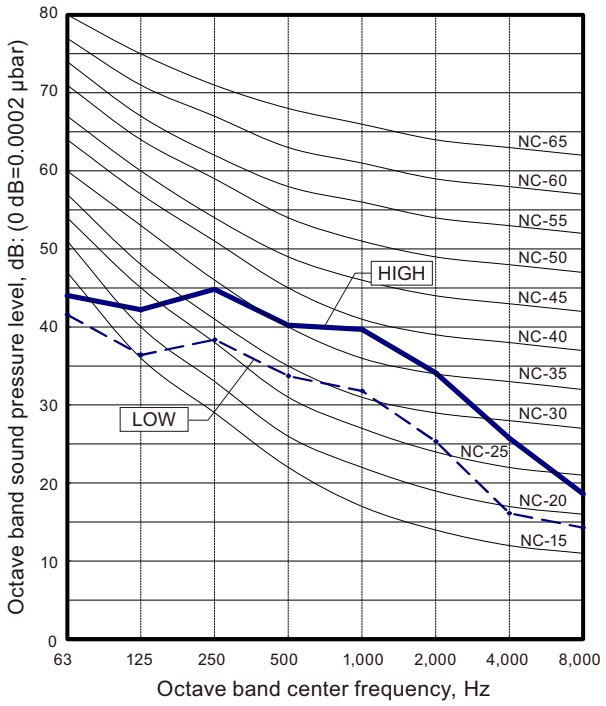

- **Model: AUXV024GLEH**

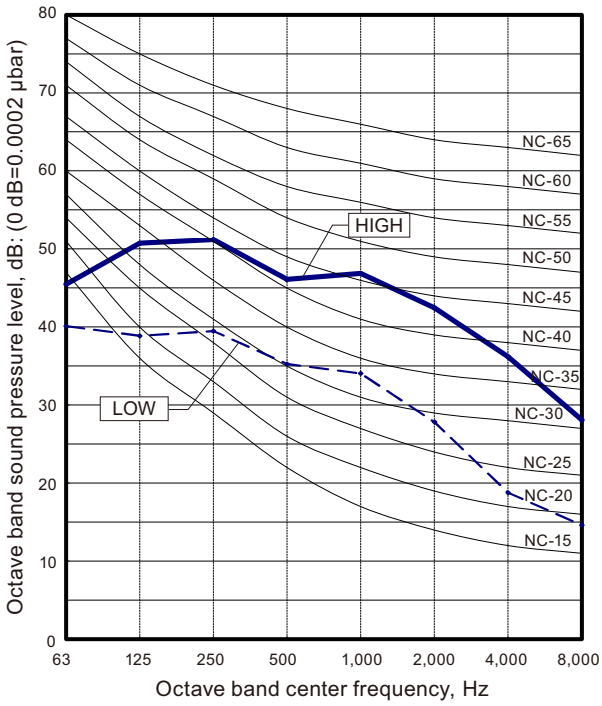

INDOOR UNITS

INDOOR UNITS

9-6. Low static pressure duct (Mini duct) type

- **Model: ARXK004GLGH**

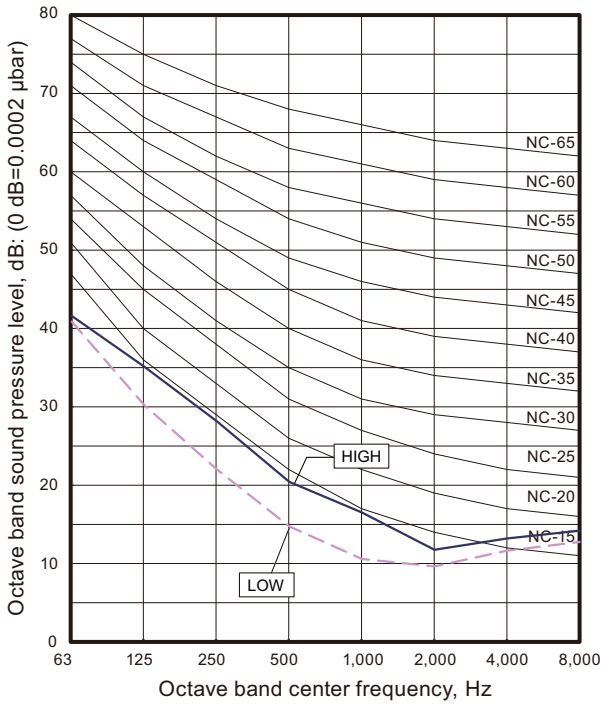

- **Models: ARXK007GLGH and ARXK009GLGH**

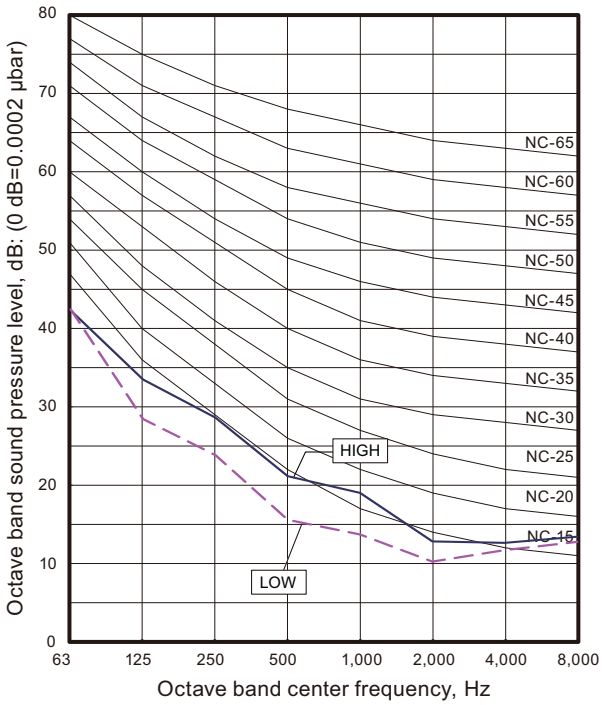

- **Model: ARXK012GLGH**

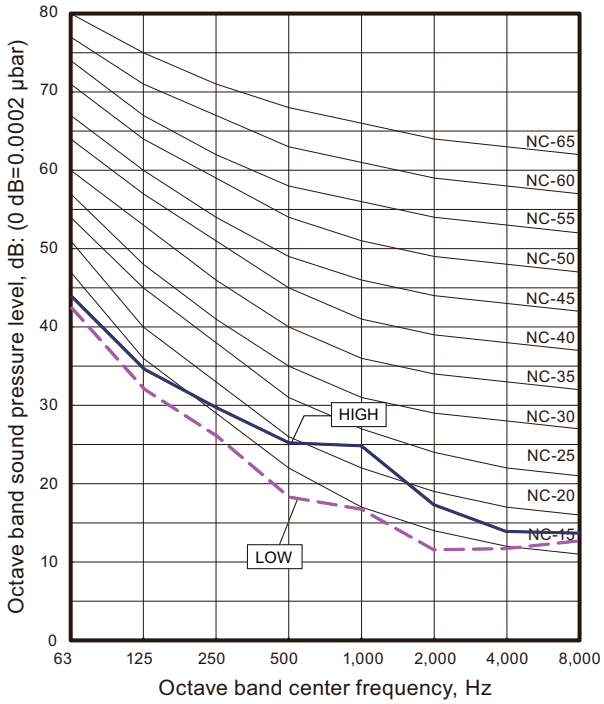

- **Model: ARXK014GLGH**

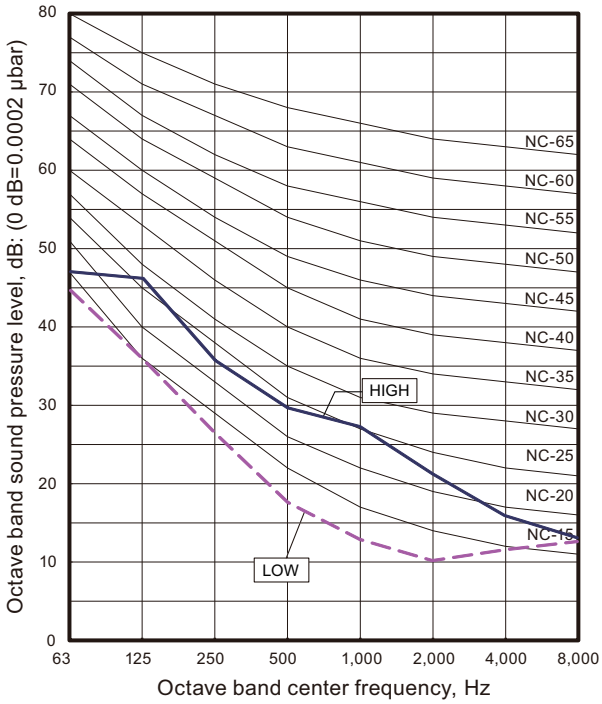

INDOOR UNITS

- **Model: ARXK018GLGH**

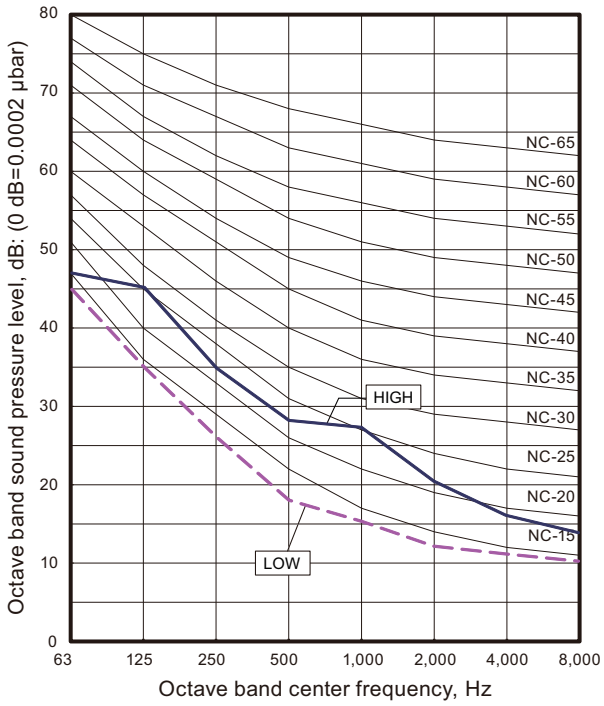

- **Model: ARXK024GLGH**

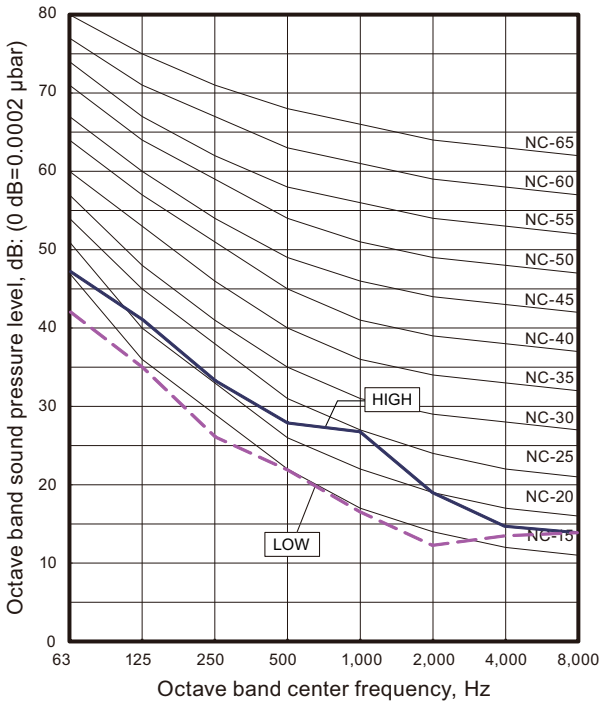

INDOOR UNITS

INDOOR UNITS

9-7. Low static pressure duct (Slim duct)/Slim concealed floor type

- **Model: ARXD007GLEH**

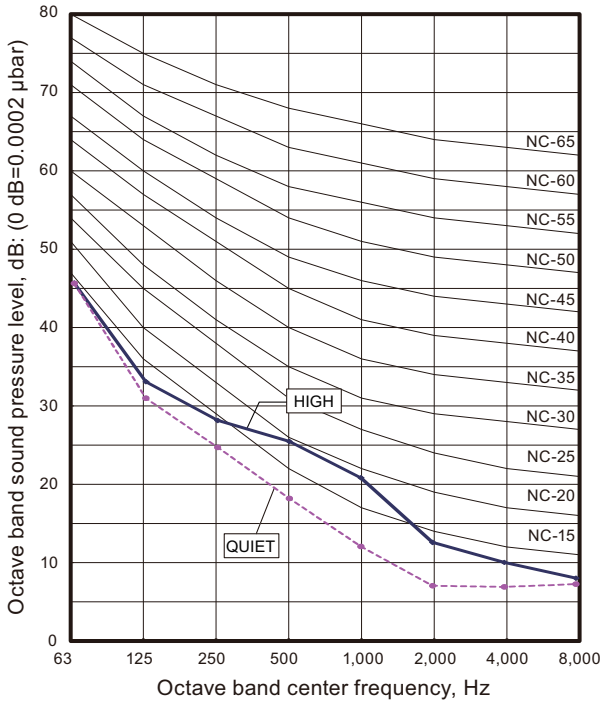

- **Model: ARXD009GLEH**

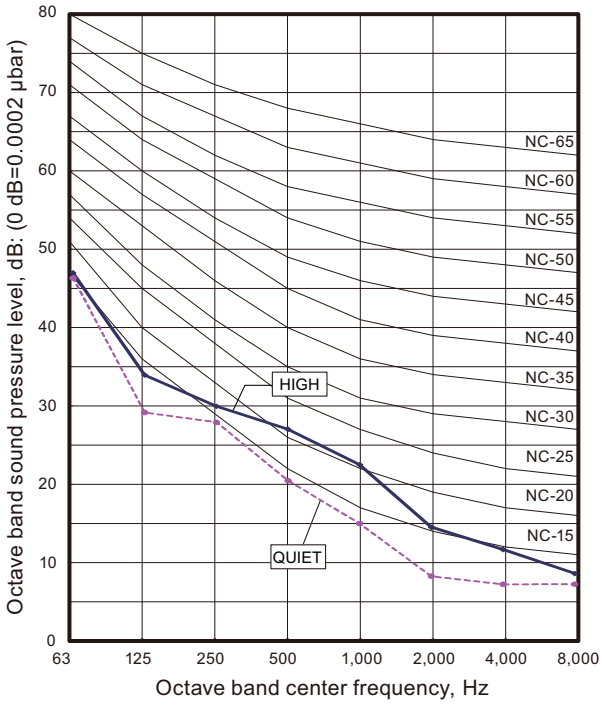

- **Model: ARXD012GLEH**

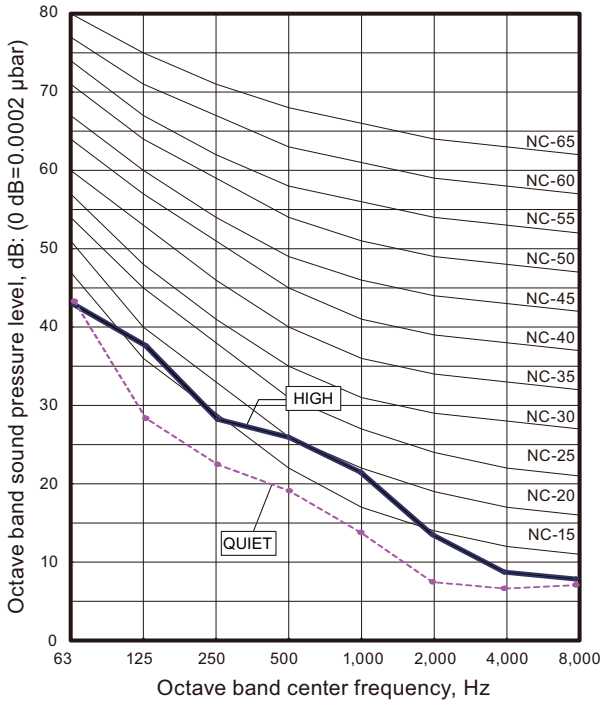

- **Model: ARXD014GLEH**

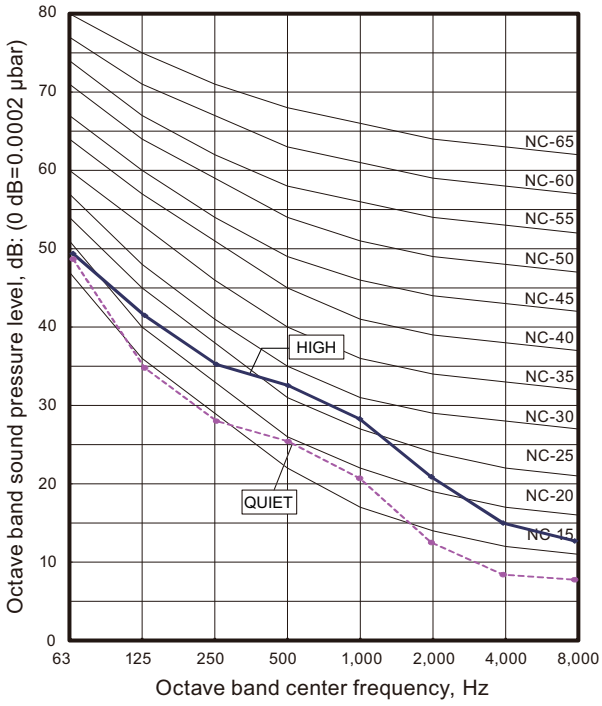

- **Model: ARXD018GLEH**

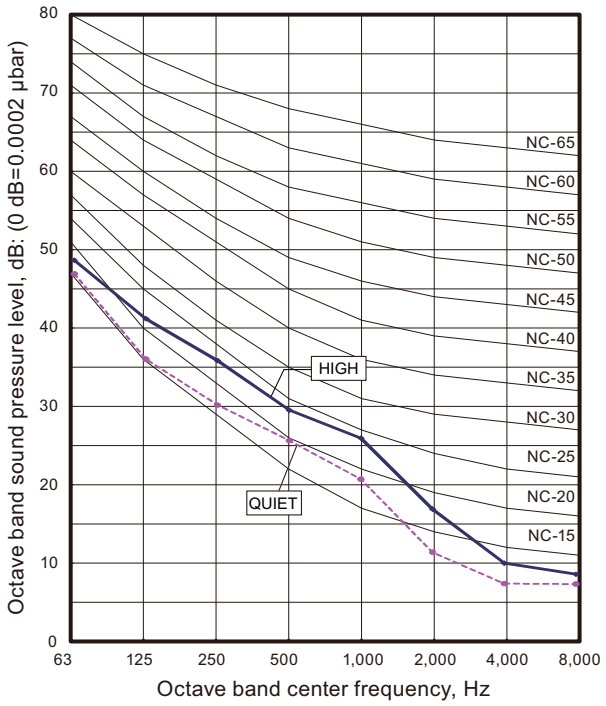

- **Model: ARXD024GLEH**

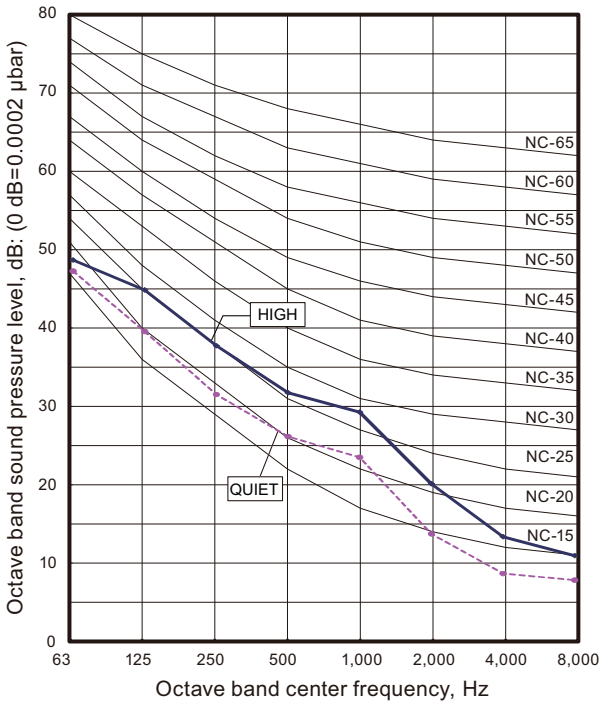

INDOOR UNITS

9-8. Low static pressure duct type (High efficiency)

- ## Model: ARXP018GLFH

Cooling

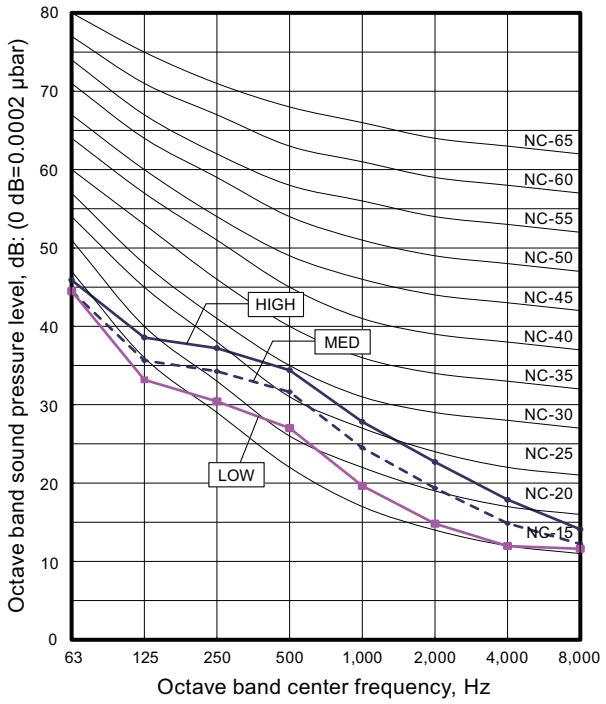

Heating

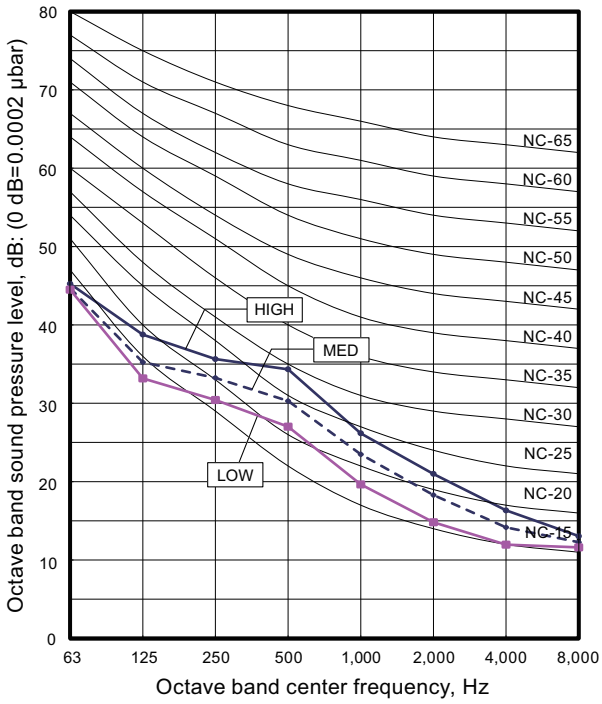

- ## Model: ARXP030GLFH

Cooling

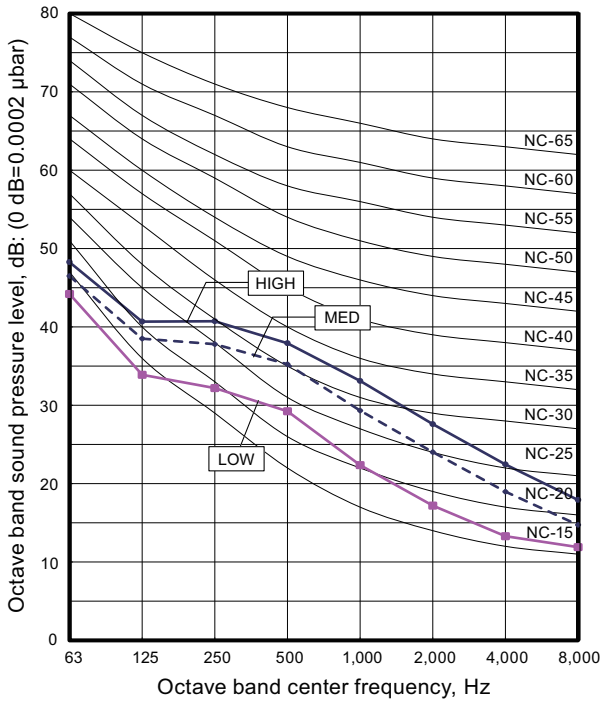

Heating

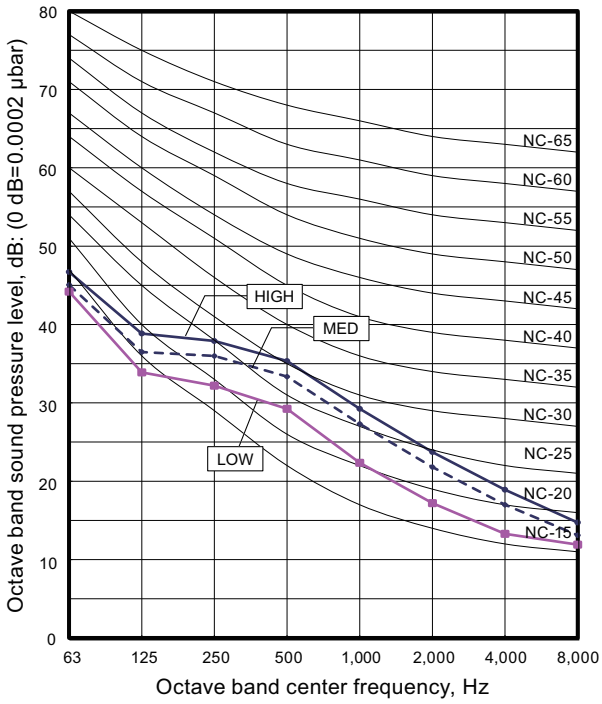

INDOOR UNITS

9-9. Medium static pressure duct type

- **Model: ARXA024GLEH**

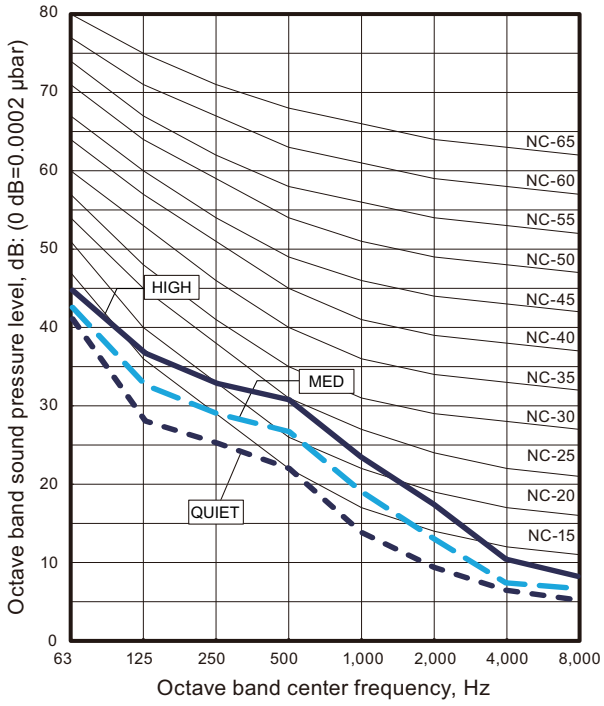

- **Model: ARXA030GLEH**

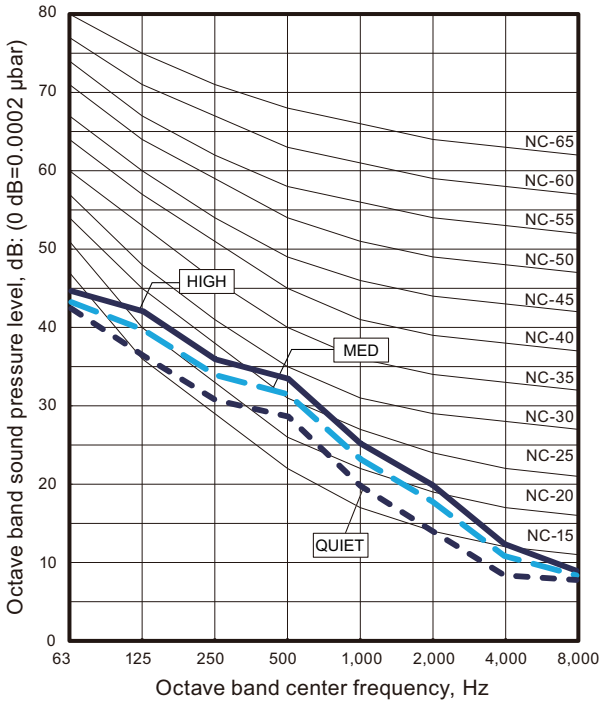

- **Model: ARXA036GLEH**

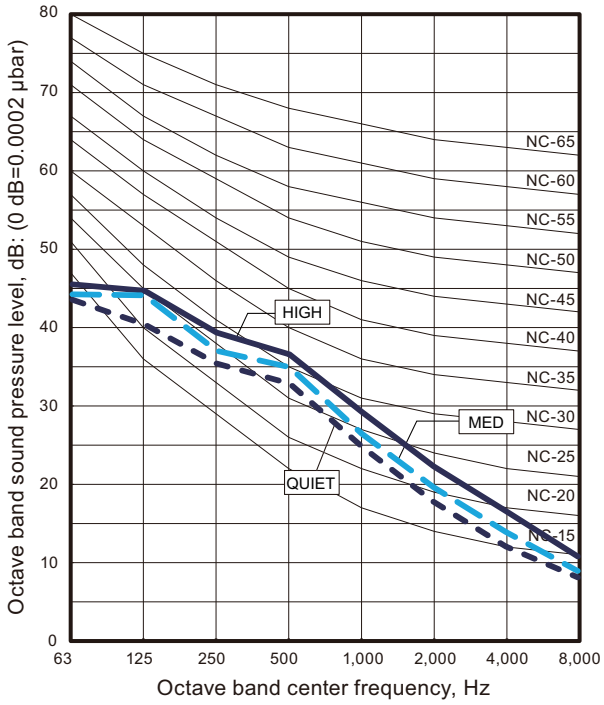

- **Model: ARXA045GLEH**

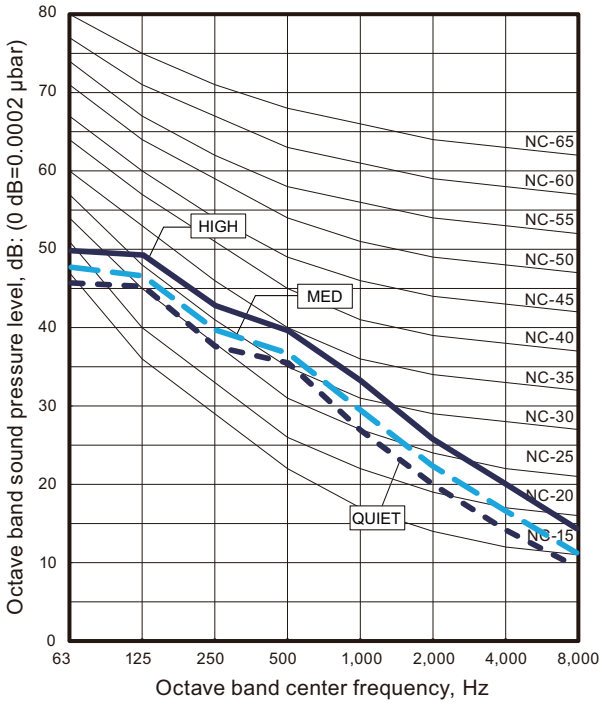

INDOOR UNITS

INDOOR UNITS

9-10. High static pressure duct type

- **Model: ARXC036GTEH**

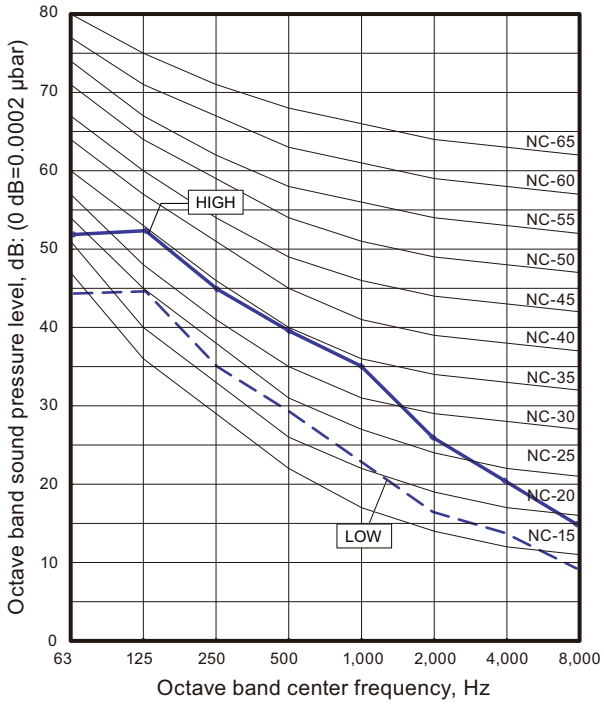

- **Model: ARXC045GTEH**

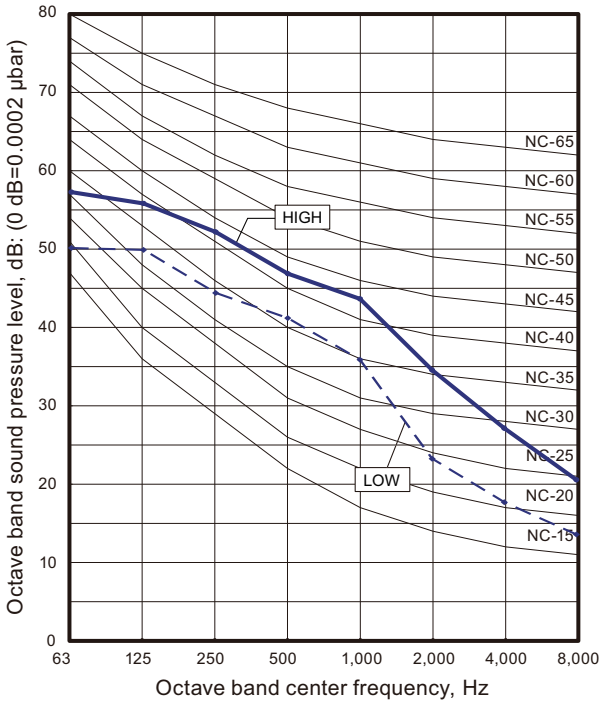

INDOOR UNITS

INDOOR UNITS

9-11. Compact floor type

- **Model: AG∗A004GCGH**

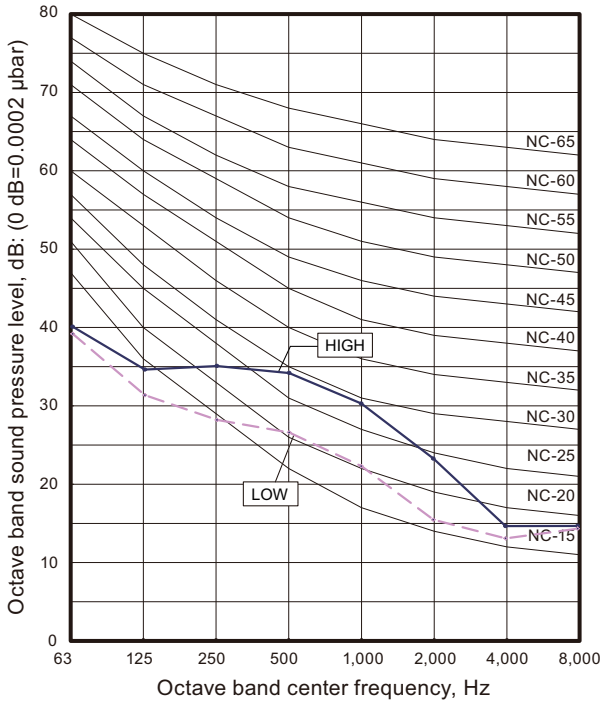

- **Model: AG∗A007GCGH**

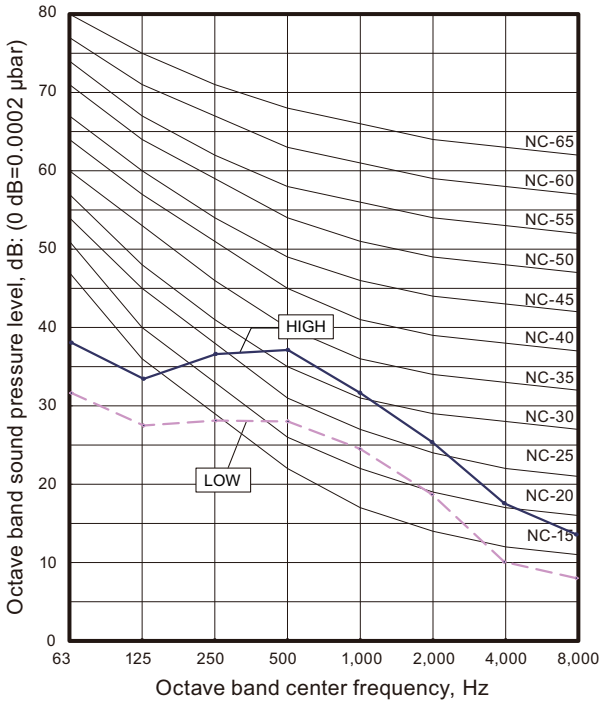

- **Model: AG∗A009GCGH**

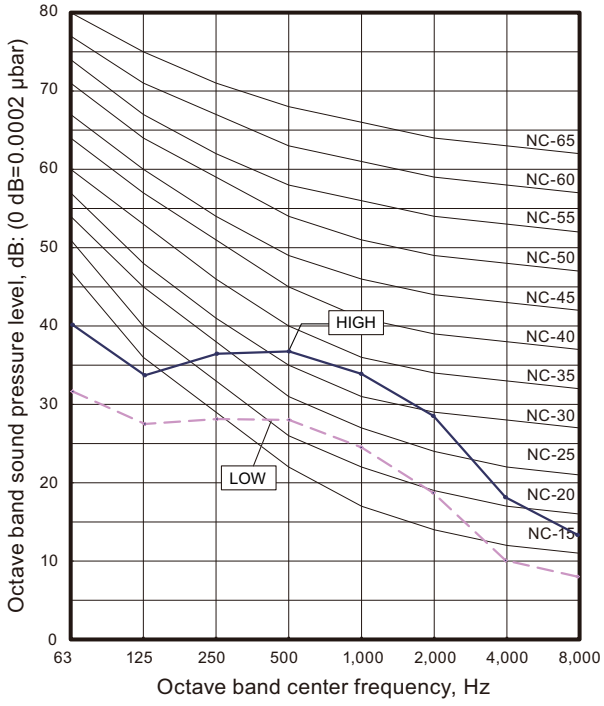

- **Model: AG∗A012GCGH**

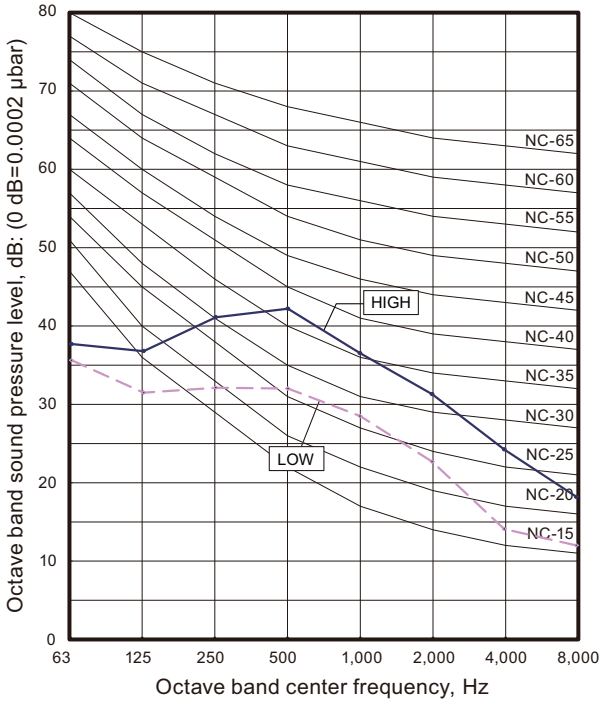

INDOOR UNITS

- **Model: AG∗A014GCGH**

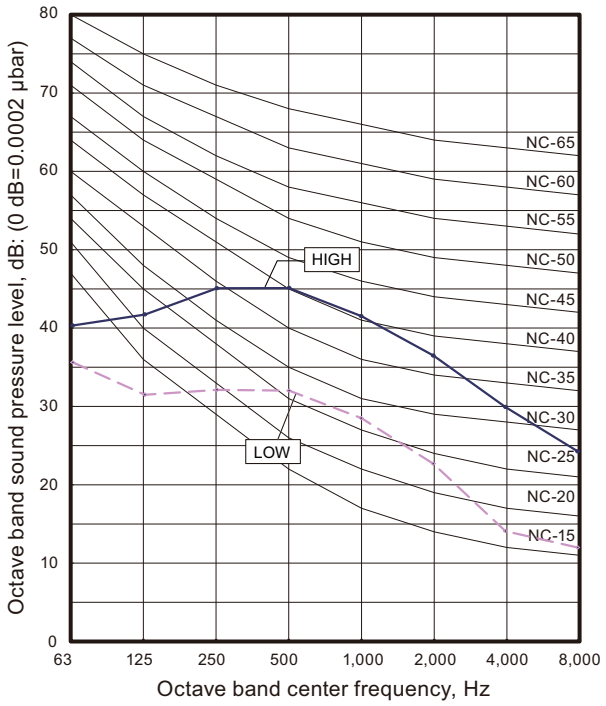

INDOOR UNITS

9-12. Compact floor type (EEV external model)

- **Model: AG∗E004GCEH**

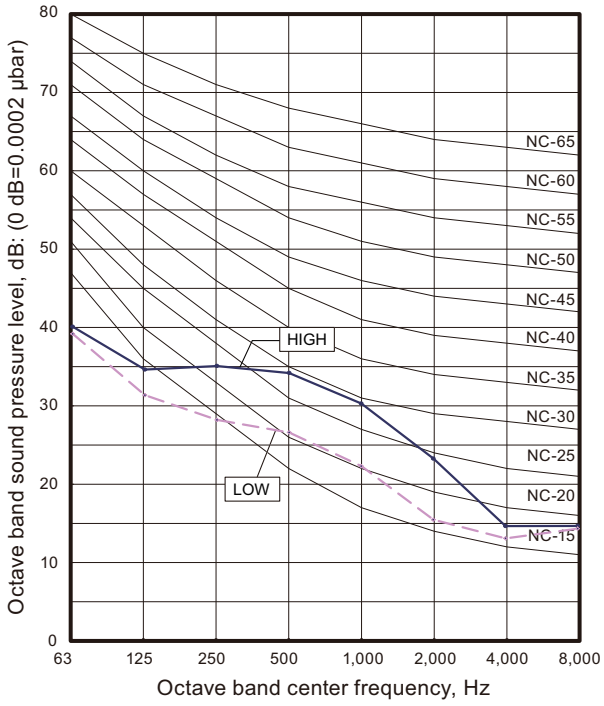

- **Model: AG∗E007GCEH**

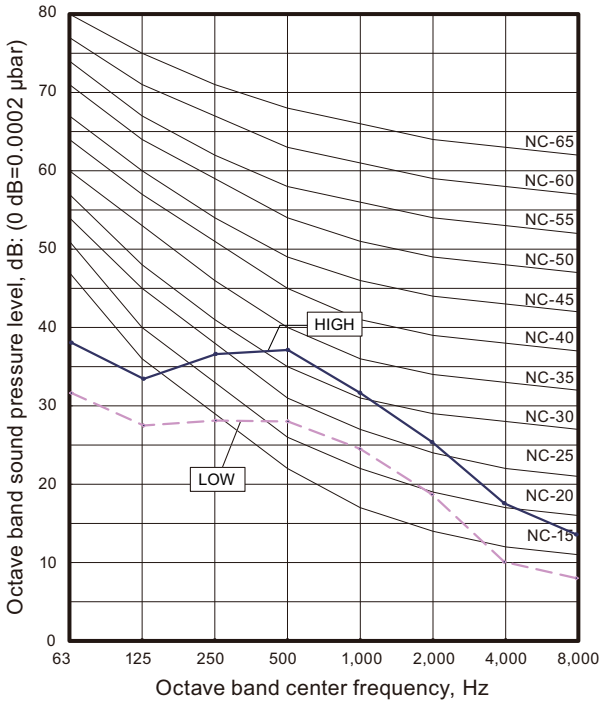

- **Model: AG∗E009GCEH**

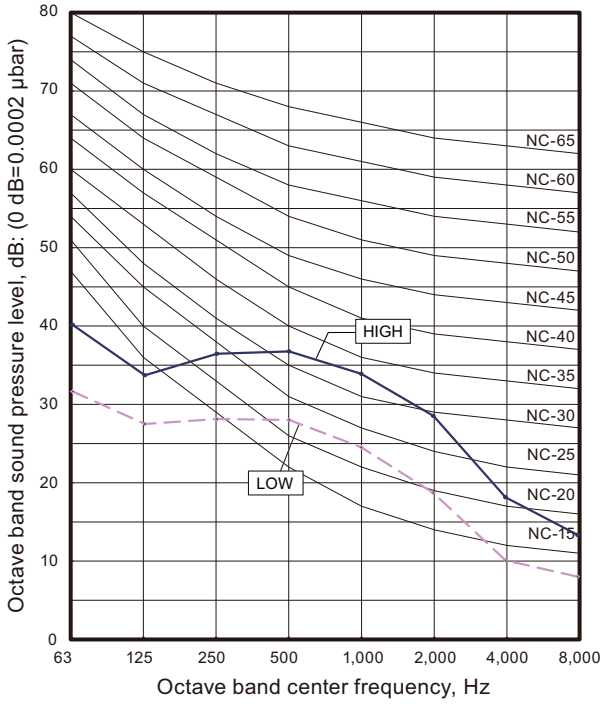

- **Model: AG∗E012GCEH**

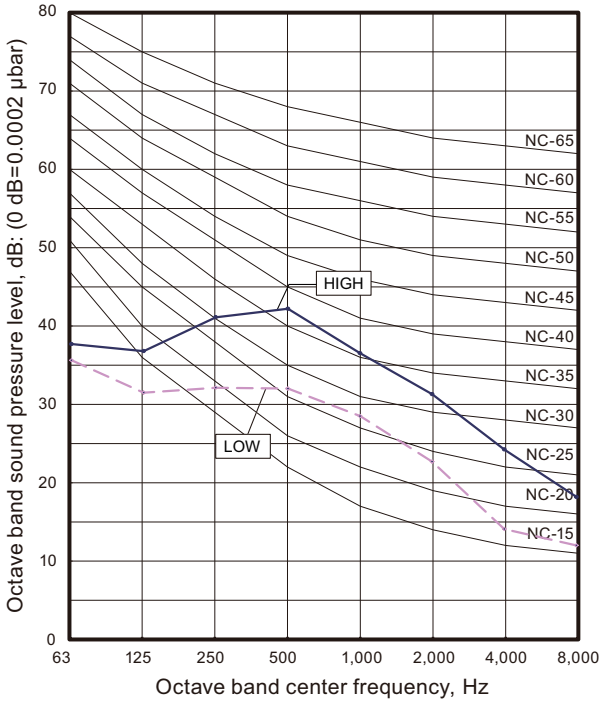

INDOOR UNITS

INDOOR UNITS

- **Model: AG∗E014GCEH**

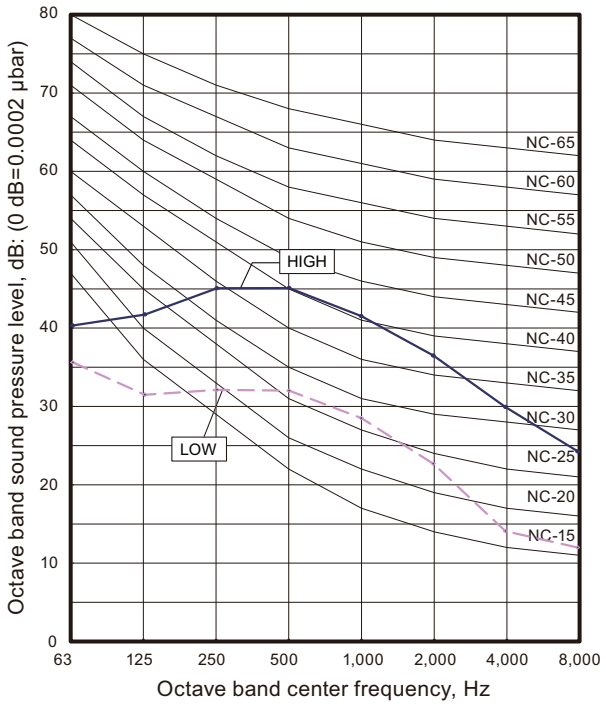

INDOOR UNITS

9-13. Floor/Ceiling type

- **Model: AB∗A012GTEH**

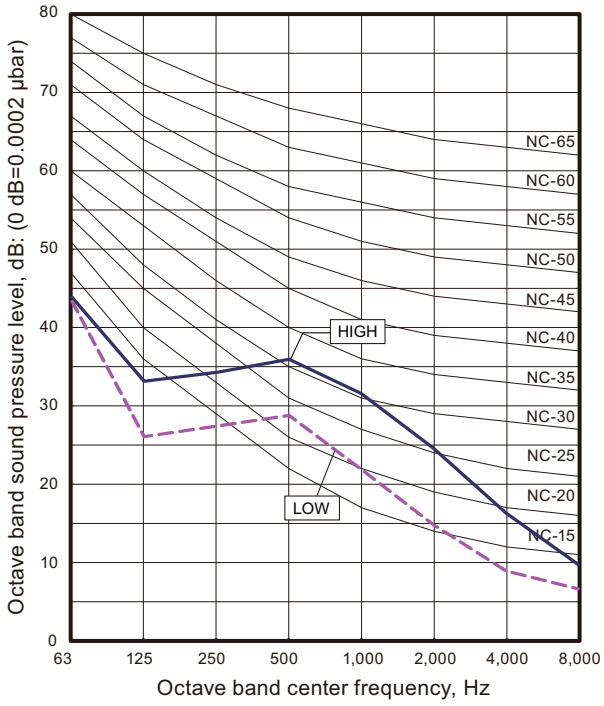

- **Model: AB∗A014GTEH**

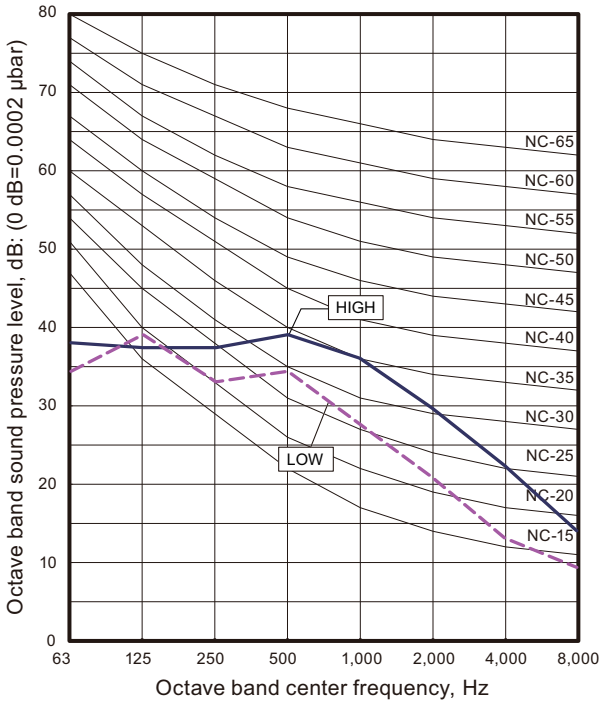

- **Model: AB∗A018GTEH**

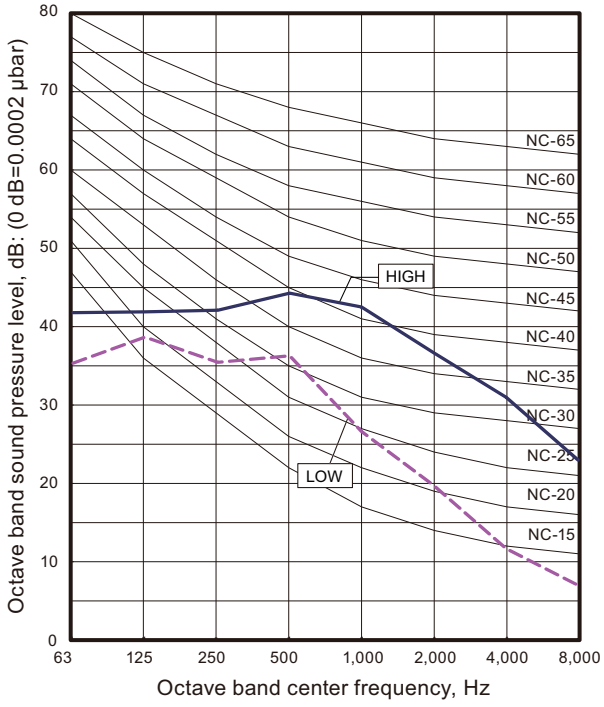

- **Model: AB∗A024GTEH**

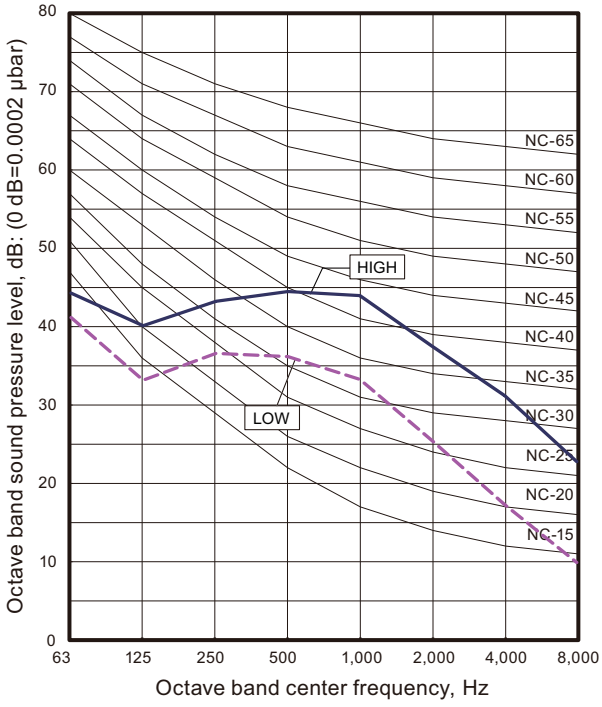

INDOOR UNITS

INDOOR UNITS

9-14. Ceiling type

- **Model: AB∗A030GTEH**

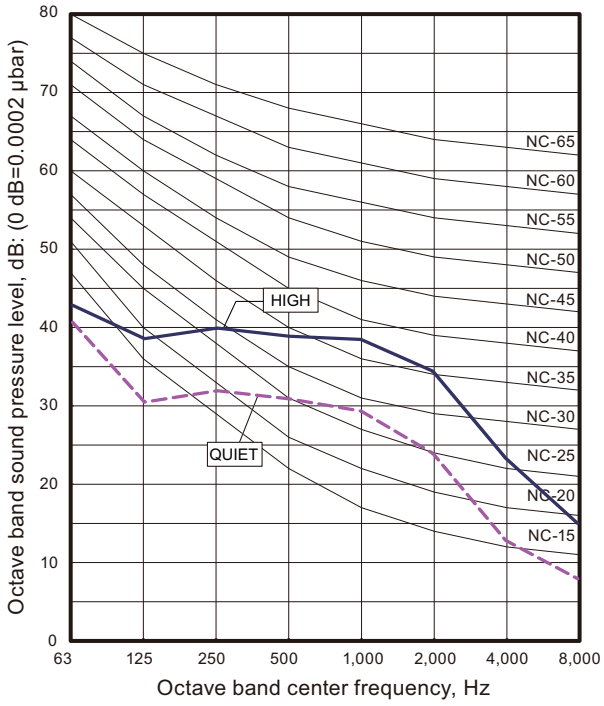

- **Model: AB∗A036GTEH**

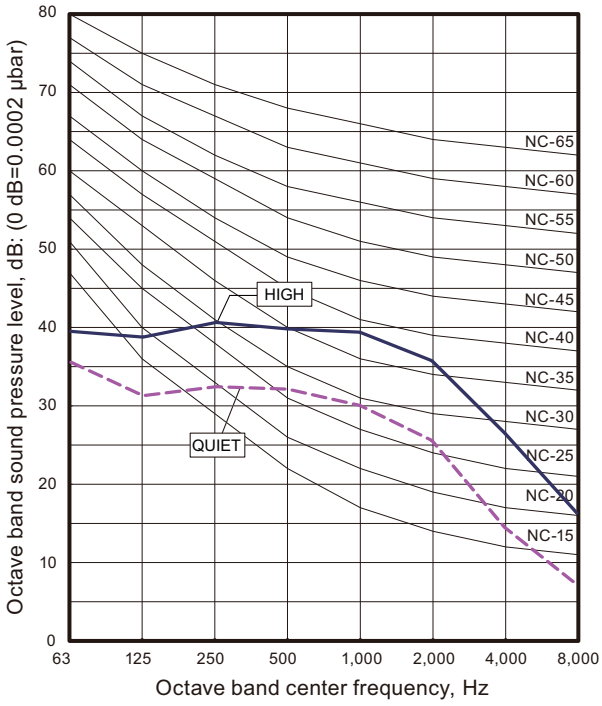

- **Model: AB∗A045GTEH**

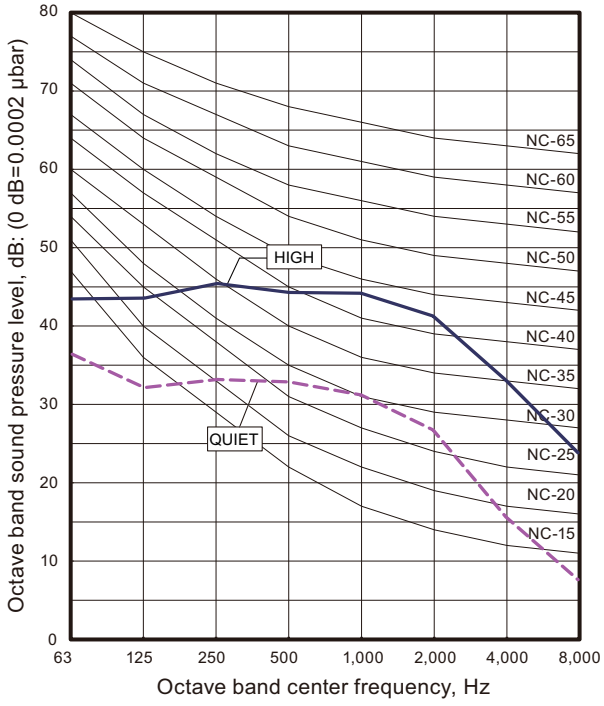

- **Model: AB∗A054GTEH**

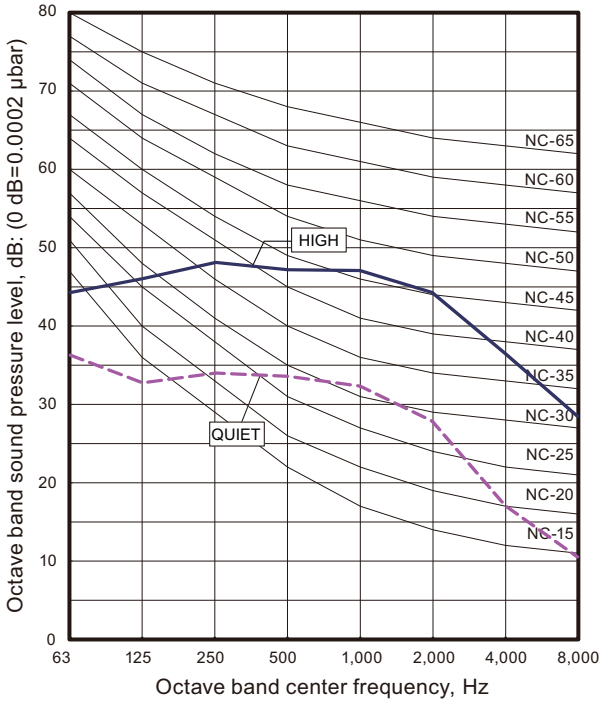

INDOOR UNITS

INDOOR UNITS

9-15. Wall mounted type

- **Model: AS∗A004GCGH**

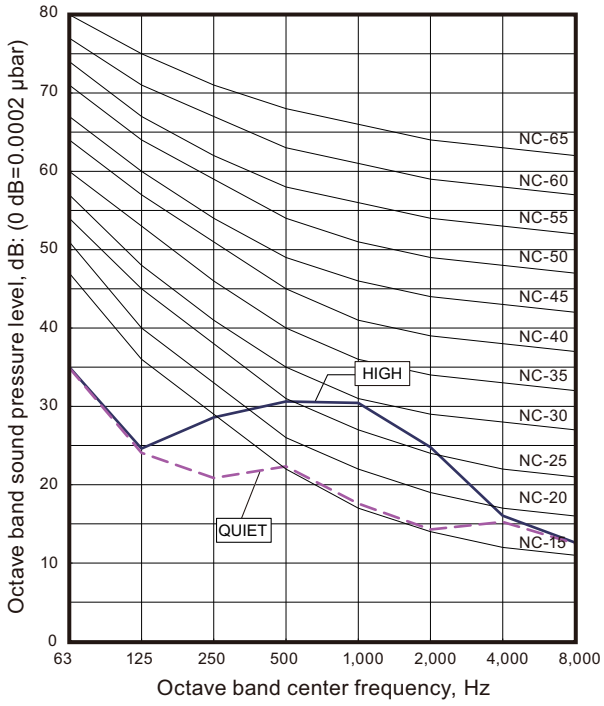

- **Model: AS∗A007GCGH**

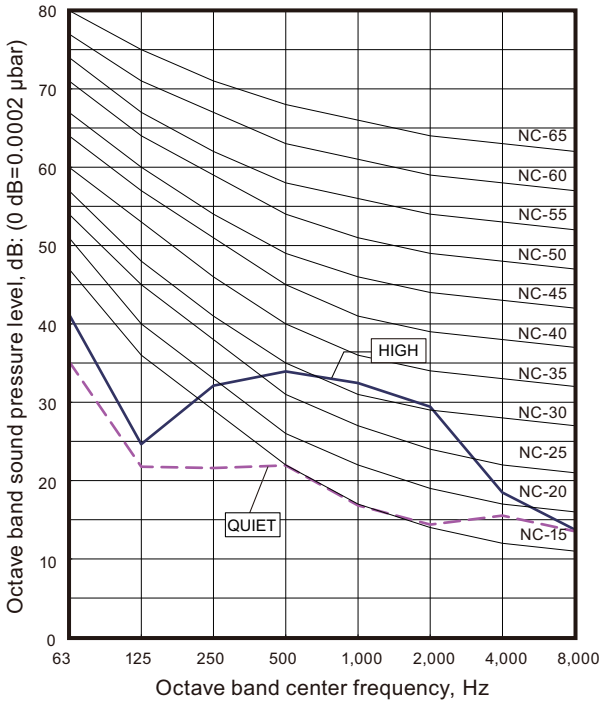

- **Model: AS∗A009GCGH**

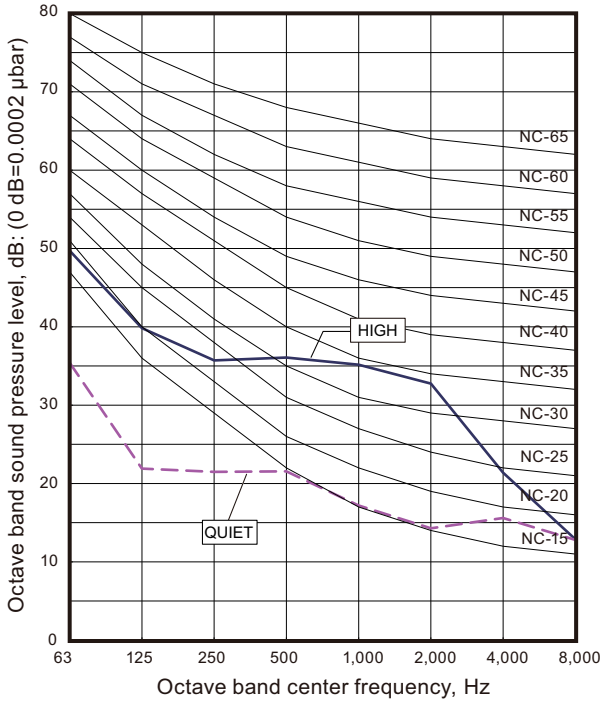

- **Model: AS∗A012GCGH**

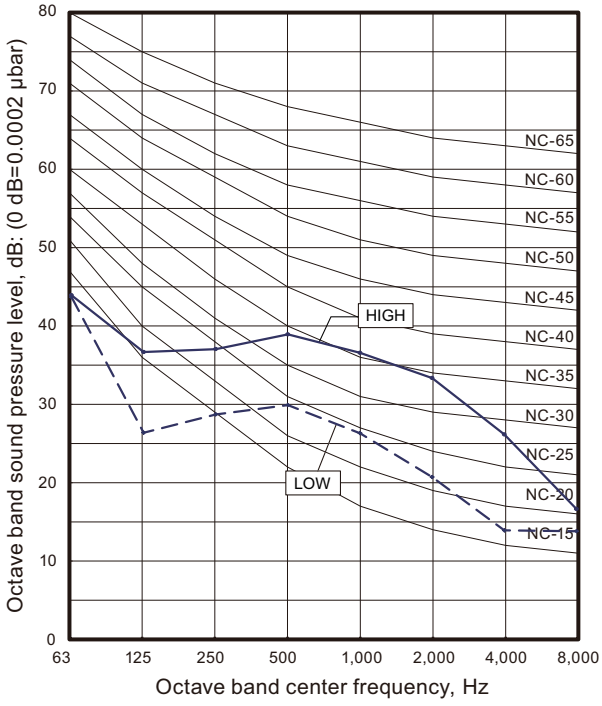

INDOOR UNITS

INDOOR UNITS

INDOOR UNITS

- **Model: AS∗A014GCGH**

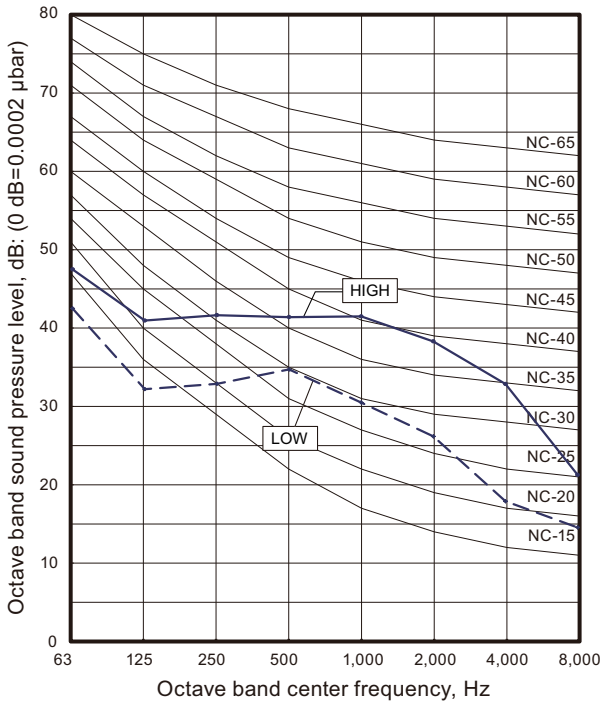

- **Model: AS∗A18GBCH**

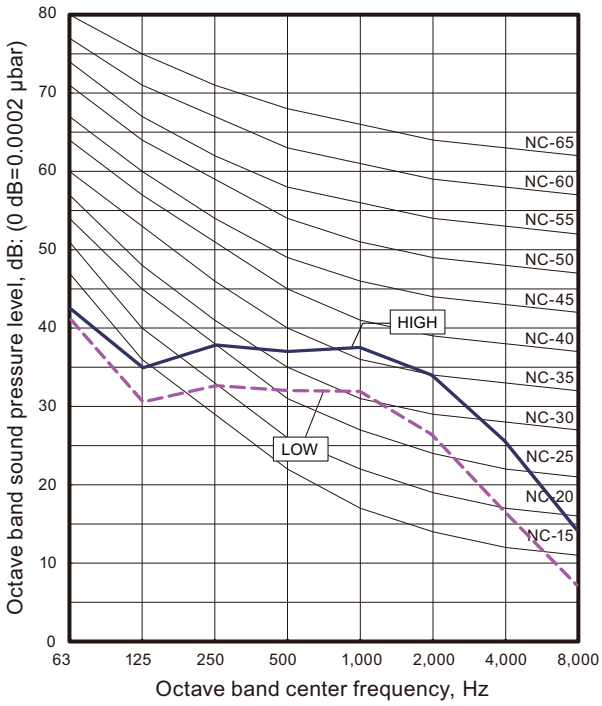

- **Model: AS∗A24GBCH**

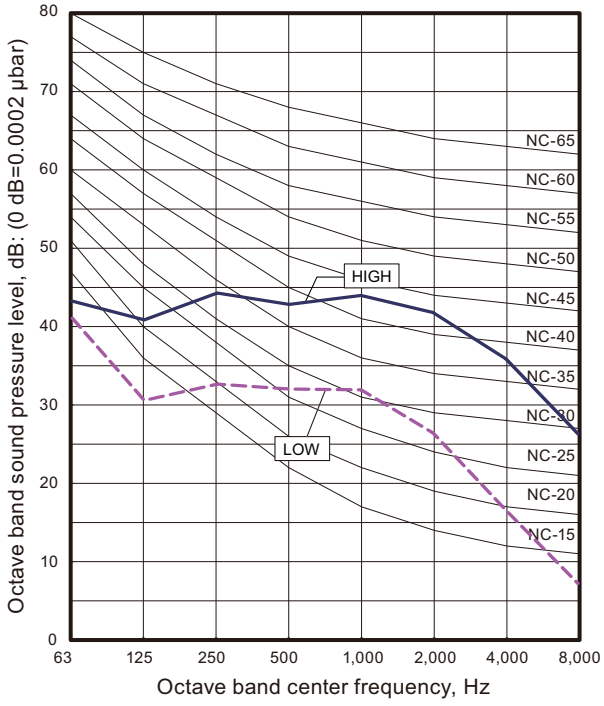

- **Model: AS∗A030GTEH**

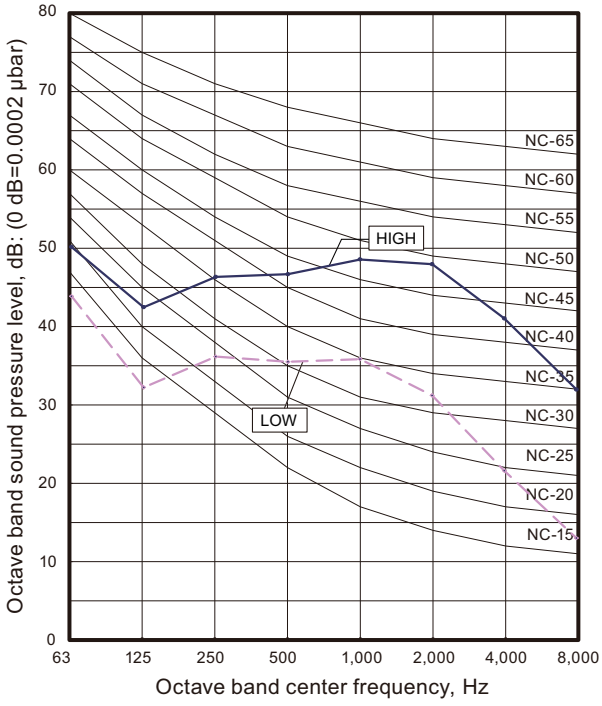

- **Model: AS∗A034GTEH**

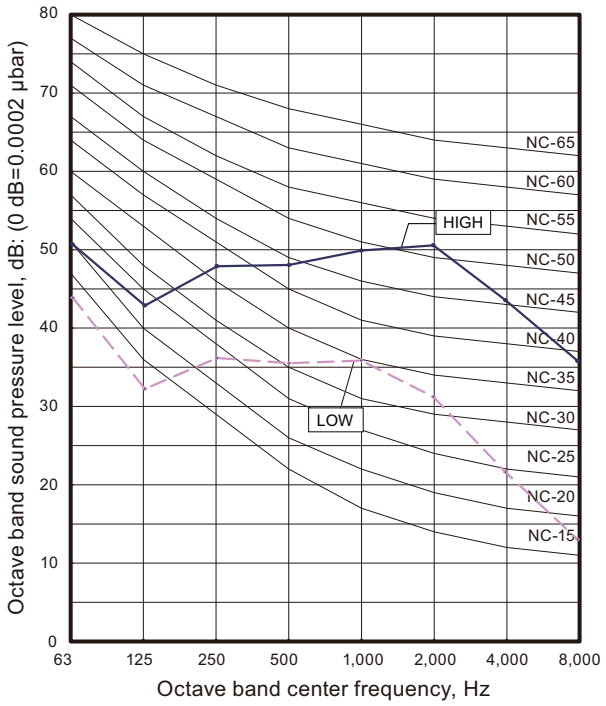

INDOOR UNITS

9-16. Wall mounted type (EEV external model)

- **Model: AS∗E004GCEH**

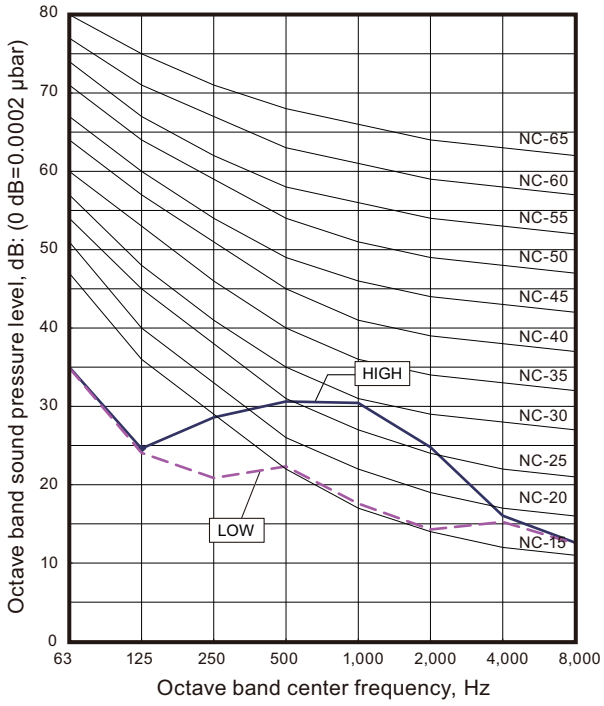

- **Model: AS∗E007GCEH**

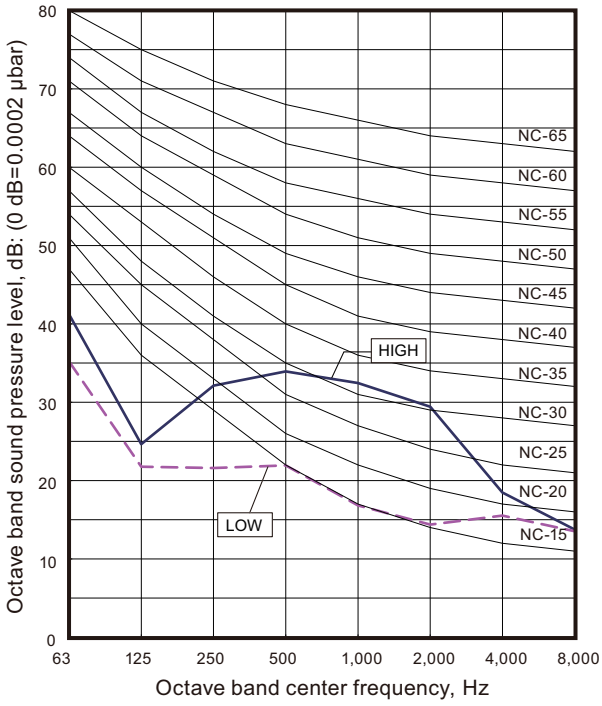

- **Model: AS∗E009GCEH**

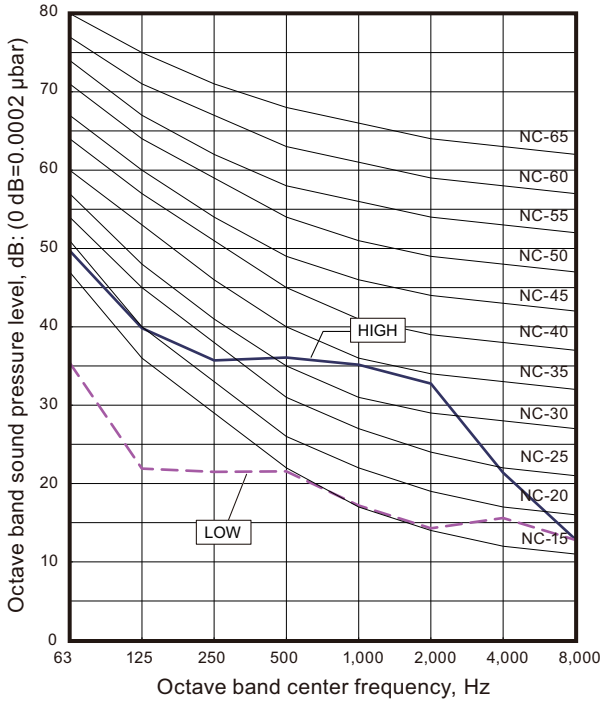

- **Model: AS∗E012GCEH**

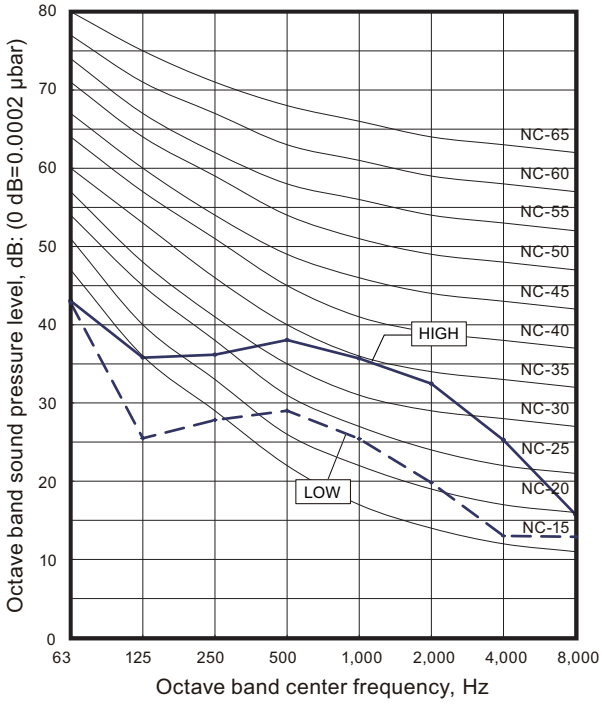

INDOOR UNITS

INDOOR UNITS

- **Model: AS∗E014GCEH**

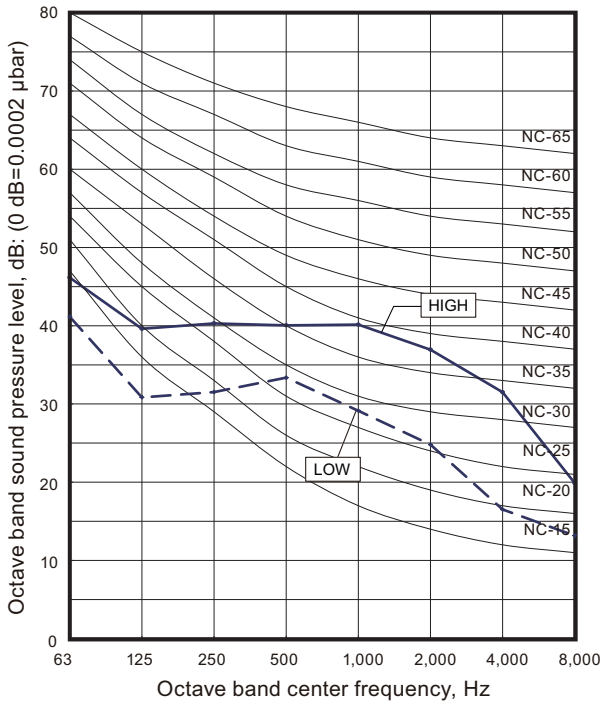

INDOOR UNITS

9-17. Sound level check point

- **Compact cassette type**
- **Circular flow cassette type**
- **4-way flow cassette type**

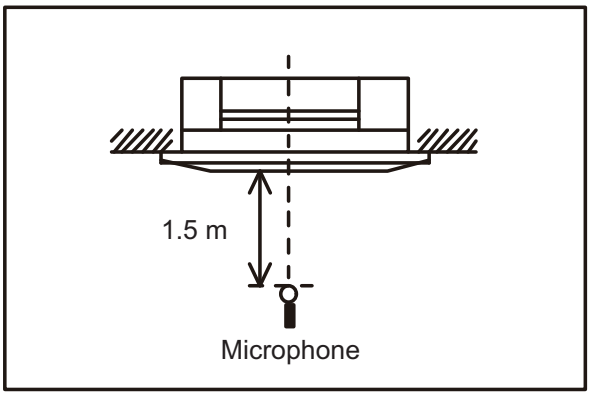

- **3D flow cassette type**

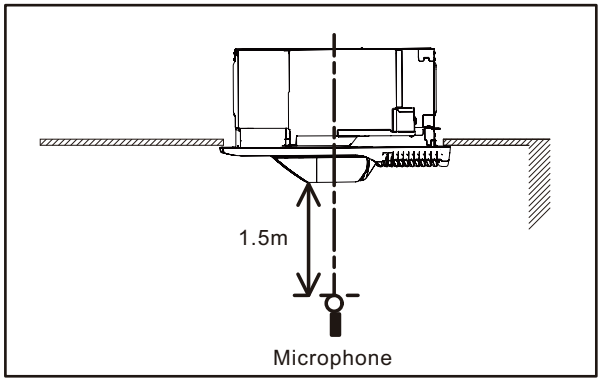

- **One way flow cassette type**

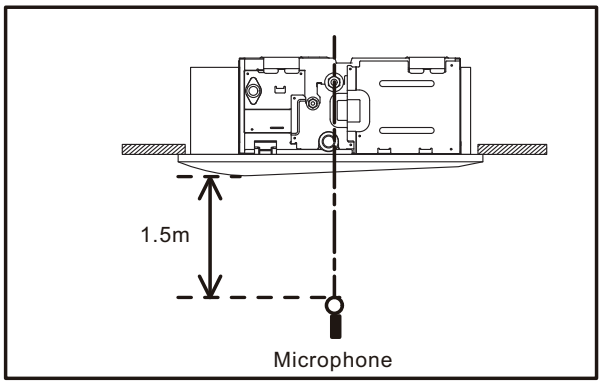

- **Low static pressure duct (Mini duct) type**
- **Low static pressure duct (Slim duct) type**
- **Medium static pressure duct type**
- **High static pressure duct type**

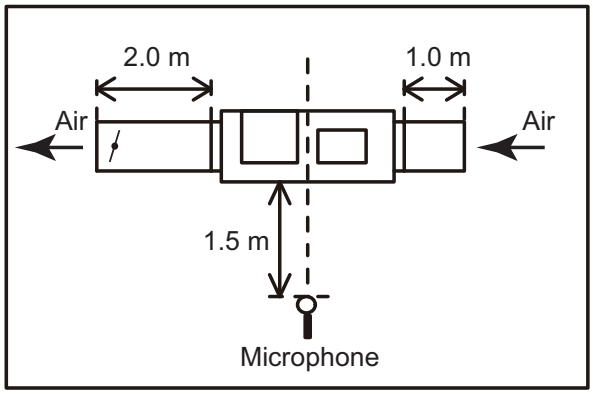

- **Compact floor type**

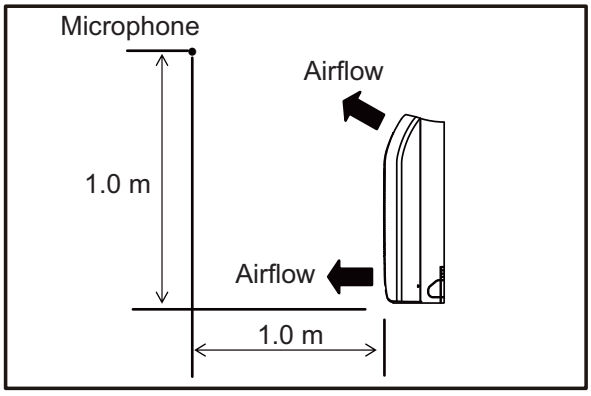

INDOOR UNITS

- **Floor/Ceiling type**
- **Ceiling type**

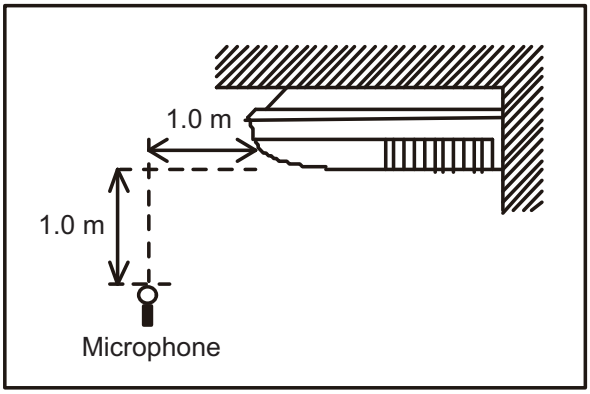

- **Wall mounted type**

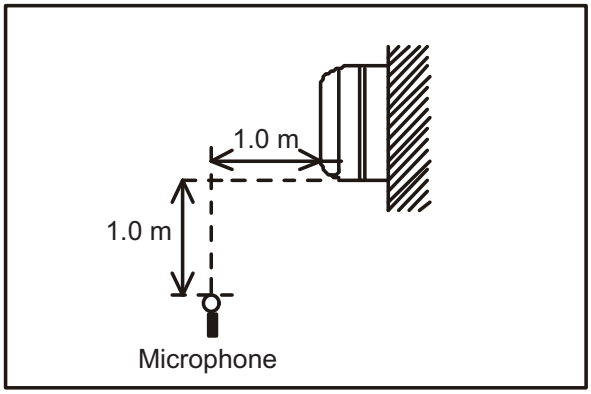

INDOOR UNITS

10. Safety devices

10-1. Compact cassette type

Model	Fuse	Fan motor thermal protector		Terminal thermal fuse	Float switch
		Active	Reset		
AUXB004GLEH	250 V 3.15 A	125 ±10°C Fan motor stop	120 ±10°C Fan motor restart	—	○
AUXB007GLEH		140 ±20°C Fan motor stop	110 ±20°C Fan motor restart		
AUXB009GLEH					
AUXB012GLEH					
AUXB014GLEH					
AUXB018GLEH					
AUXB024GLEH					

10-2. 4-way flow cassette type

Model	Fuse	Fan motor thermal protector		Terminal thermal fuse	Float switch
		Active	Reset		
AUXD18GALH	250 V 3.15 A	110^{+15}_{-10}°C Fan motor stop	105^{+15}_{-10}°C Fan motor Restart	—	○
AUXD24GALH					
AUXA30GALH					
AUXA34GALH					
AUXA36GALH					
AUXA45GALH					
AUXA54GALH					

10-3. Circular flow cassette type

Model	Fuse	Fan motor thermal protector		Terminal thermal fuse	Float switch
		Active	Reset		
AUXN009GLAH	250 V 3.15 A	125 ±10°C Fan motor stop	120 ±10°C Fan motor Restart	—	○
AUXN012GLAH					
AUXN014GLAH					
AUXM018GLEH					
AUXM024GLEH					
AUXM030GLEH					
AUXK018GLEH					
AUXK024GLEH					
AUXK030GLEH					
AUXK034GLEH					
AUXK036GLEH					
AUXK045GLEH					
AUXK054GLEH					

INDOOR UNITS

10-4. 3D flow cassette type

Model	Fuse	Fan motor thermal protector		Terminal thermal fuse	Float switch
		Active	Reset		
AUXS018GLEH	250 V 3.15 A	135 ±15°C Fan motor stop	115 ±15°C Fan motor Restart	—	○
AUXS024GLEH					

10-5. One way flow cassette type

Model	Fuse	Fan motor thermal protector		Terminal thermal fuse	Float switch
		Active	Reset		
AUXV004GLEH	250 V 3.15 A	135 ±15°C Fan motor stop	115 ±15°C Fan motor Restart	—	○
AUXV007GLEH					
AUXV009GLEH					
AUXV012GLEH					
AUXV014GLEH					
AUXV018GLEH					
AUXV024GLEH					

INDOOR UNITS

10-6. Low static pressure duct (Mini duct) type

Model	Fuse	Fan motor thermal protector		Terminal thermal fuse	Float switch
		Active	Reset		
ARXK004GLGH	250 V 3.15 A	135 ±15°C Fan motor stop	115 ±15°C Fan motor Restart	—	○
ARXK007GLGH					
ARXK009GLGH					
ARXK012GLGH					
ARXK014GLGH					
ARXK018GLGH					
ARXK024GLGH					

10-7. Low static pressure duct (Slim duct)/Slim concealed floor type

Model	Fuse	Fan motor thermal protector		Terminal thermal fuse	Float switch
		Active	Reset		
ARXD007GLEH	250 V 5 A	135 ±15°C Fan motor stop	115 ±15°C Fan motor restart	—	○
ARXD009GLEH					
ARXD012GLEH					
ARXD014GLEH					
ARXD018GLEH					
ARXD024GLEH					

10-8. Low static pressure duct type (High efficiency)

Model	Fuse	Fan motor thermal protector		Terminal thermal fuse	Float switch
		Active	Reset		
ARXP018GLFH ARXP030GLFH	250 V 5 A	115 ±15 °C Fan motor stop	70 °C or less Fan motor Restart	—	▲*

*: Including in Drain pump unit (Optional parts)

10-9. Medium static pressure duct type

Model	Fuse	Fan motor thermal protector		Terminal thermal fuse	Float switch
		Active	Reset		
ARXA024GLEH	250 V 5 A	135 ±15°C Fan motor stop	115 ±15°C Fan motor Restart	—	▲*
ARXA030GLEH ARXA036GLEH ARXA045GLEH		115 ±15°C Fan motor stop	70°C or less Fan motor Restart		

*: Including in Drain pump unit (Optional parts)

10-10. High static pressure duct type

Model	Fuse	Fan motor thermal protector		Terminal thermal fuse	Float switch
		Active	Reset		
ARXC036GTEH	250 V 3.15 A	115 ±15°C Fan motor stop	70°C or less Fan motor restart	—	—
ARXC045GTEH	250 V, 3.15 A 250 V, 10 A*	145 ±5°C Fan motor stop	—		

*: Fuse for fan motor

10-11. Compact floor type

Model	Fuse	Fan motor thermal protector		Terminal thermal fuse	Float switch
		Active	Reset		
AG∗A004GCGH AG∗A007GCGH AG∗A009GCGH AG∗A012GCGH AG∗A014GCGH	250 V 3.15 A	150 ±15°C Fan motor stop	120 ±15°C Fan motor restart	—	—

INDOOR UNITS

10-12. Compact floor type (EEV external model)

Model	Fuse	Fan motor thermal protector		Terminal thermal fuse	Float switch
		Active	Reset		
AG∗E004GCEH	250 V 3.15 A	150 ±15°C Fan motor stop	120 ±15°C Fan motor restart	—	—
AG∗E007GCEH					
AG∗E009GCEH					
AG∗E012GCEH					
AG∗E014GCEH					

10-13. Floor/Ceiling type

Model	Fuse	Fan motor thermal protector		Terminal thermal fuse	Float switch
		Active	Reset		
AB∗A012GTEH	250 V 3.15 A	135 ±15°C Fan motor stop	115 ±15°C Fan motor restart	—	—
AB∗A014GTEH					
AB∗A018GTEH					
AB∗A024GTEH					

10-14. Ceiling type

Model	Fuse	Fan motor thermal protector		Terminal thermal fuse	Float switch
		Active	Reset		
AB∗A030GTEH	250 V 5 A	135 ±15°C Fan motor stop	115 ±15°C Fan motor restart	—	▲*
AB∗A036GTEH					
AB∗A045GTEH					
AB∗A054GTEH					

*: Including in Drain pump unit (Optional parts)

10-15. Wall mounted type

Model	Fuse	Fan motor thermal protector		Terminal thermal fuse	Float switch
		Active	Reset		
AS∗A004GCGH	250 V 3.15 A	160 ±25°C Fan motor stop	110 ±25°C Fan motor restart	—	—
AS∗A007GCGH					
AS∗A009GCGH					
AS∗A012GCGH					
AS∗A014GCGH					
AS∗A18GBCH		120 ±15°C Fan motor stop	—	Active at 102°C	
AS∗A24GBCH					
AS∗A030GTEH		150 ±15°C Fan motor stop	Less than 135°C Fan motor restart	—	
AS∗A034GTEH					

INDOOR UNITS

10-16. Wall mounted type (EEV external model)

Model	Fuse	Fan motor thermal protector		Terminal thermal fuse	Float switch
		Active	Reset		
AS∗E004GCEH	250 V 3.15 A	160 ±25°C Fan motor stop	110 ±25°C Fan motor restart	—	—
AS∗E007GCEH					
AS∗E009GCEH					
AS∗E012GCEH					
AS∗E014GCEH					

INDOOR UNITS

11. Standard accessories

The following installation parts are supplied. Use them as required. Do not discard any accessories until the installation work has been completed.

11-1. Compact cassette type

Name and shape	Q'ty	Application	Name and shape	Q'ty	Application
Operating manual	1		M10 nut A (with flange)	4	For installing indoor unit
Installation manual	1		M10 nut B (with spring lock washer)	4	For installing indoor unit
Operating manual (CD-ROM)	1		Template (Carton top)	1	For cutting opening Also used as packing
Cable tie (Large)	4	For fixing the connection pipe (Large and small)	Drain hose	1	For connecting drain hose
Cable tie (Medium)	2	For transmission cable and remote controller cable binding	Hose band	1	For installing drain hose
Coupler heat insulation (Small)	1	For indoor side pipe joint (Liquid pipe)	Drain hose insulation	1	For installing drain hose
Coupler heat insulation (Large)	1	For indoor side pipe joint (Gas pipe)			

INDOOR UNITS

INDOOR UNITS

11-2. 4-way flow cassette type

Name and shape	Q'ty	Application	Name and shape	Q'ty	Application
Operating manual	1		Template (Carton top)	1	For installing indoor unit
Installation manual	1		Washer	8	For installing indoor unit
Operating manual (CD-ROM)	1		Insulation	1	For installing drain pipe
Cable tie (Large)	4	For fixing the connection pipe (Large and small)	Drain hose	1	For installing drain hose
Cable tie (Medium)	2	For transmission cable and remote controller cable binding	Hose band	1	For installing drain hose
Coupler heat insulation (Small)	1	For indoor side pipe joint (Liquid pipe)	Drain pipe insulation	1	For installing drain pipe
Coupler heat insulation (Large)	1	For indoor side pipe joint (Gas pipe)			

INDOOR UNITS

11-3. Circular flow cassette type

Name and shape	Q'ty	Application	Name and shape	Q'ty	Application
Operating manual	1		Template (Carton top)	1	For installing indoor unit
Installation manual	1		Washer	8	For installing indoor unit
Operating manual (CD-ROM)	1		Insulation	1	For installing drain pipe
Cable tie (Large)	4	For fixing the connection pipe (Large and small)	Drain hose	1	For installing drain hose
Push mount cable tie	1	For transmission cable and remote controller cable binding	Hose band	1	For installing drain hose
Coupler heat insulation (Small)	1	For indoor side pipe joint (Liquid pipe)	Drain pipe insulation	1	For installing drain pipe
Coupler heat insulation (Large)	1	For indoor side pipe joint (Gas pipe)			

INDOOR UNITS

11-4. 3D flow cassette type

Name and shape	Q'ty	Application	Name and shape	Q'ty	Application
Operating manual	1		Coupler heat insulation (Large)	1	For indoor side pipe joint (Gas pipe)
Installation manual	1		Template (Carbon top)	1	For installing indoor unit
Operating manual (CD-ROM)	1		Washer	8	For installing indoor unit
Cable tie (Large)	4	For fixing the connection pipe (Large and small)	Drain hose installation B	1	Insulates the drain hose
Cable tie (Medium)	1	For transmission cable and remote controller cable binding	Drain hose	1	For installing drain hose
Push mount cable tie	1	For transmission cable and remote controller cable binding	Hose band	1	For installing drain hose
Coupler heat insulation (Small)	1	For indoor side pipe joint (Liquid pipe)	Hook wire	1	For installing indoor unit

INDOOR UNITS

11-5. One way flow cassette type

Name and shape	Q'ty	Application	Name and shape	Q'ty	Application
Operating manual	1		Template	1	For installing indoor unit
Installation manual	1		Washer	8	For installing indoor unit
Operating manual (CD-ROM)	1		Drain hose installation B	1	Insulates the drain hose
Cable tie (Large)	4	For fixing the coupler heat insulation.	Drain hose	1	For installing drain pipe VP25 (O.D.32, I.D.25)
Cable tie (Medium)	2	For transmission cable and remote controller cable binding	Hose band	1	For installing drain hose
Coupler heat insulation (Small)	1	For indoor side pipe joint (small pipe)	Coupler heat insulation (Large)	1	For indoor side pipe joint (large pipe)

INDOOR UNITS

11-6. Low static pressure duct (Mini duct) type

Name and shape	Q'ty	Application	Name and shape	Q'ty	Application
Operating manual	1		Filter (Small)	2	For ARXK007GLGH, ARXK009GLGH, ARXK012GLGH, ARXK014GLGH, and ARXK024GLGH
Installation manual	1		Filter (Large)	2	For ARXK018GLGH
Operating manual (CD-ROM)	1			1	For ARXK024GLGH
Washer	8	For installing indoor unit	Drain hose	1	For installing drain hose
Coupler heat insulation (Small)	1	For indoor side pipe joint (Liquid pipe)	Hose band	1	For installing drain hose
Coupler heat insulation (Large)	1	For indoor side pipe joint (Gas pipe)	Drain hose installation B	1	Insulates the drain hose
Cable tie (Large)	4	For fixing the coupler heat insulation	Template (Carton top)	1	For cutting ceiling opening Also used as packing
Cable tie (Medium)	2	For transmission cable and remote controller cable binding			

INDOOR UNITS

INDOOR UNITS

11-7. Low static pressure duct (Slim duct)/Slim concealed floor type

Name and shape	Q'ty	Application	Name and shape	Q'ty	Application
Operating manual	1		Filter (Small)	2	For ARXD007GLEH, ARXD009GLEH, ARXD012GLEH, ARXD014GLEH, and ARXD024GLEH
Installation manual	1		Filter (Large)	2	For ARXD018GLEH
Operating manual (CD-ROM)	1			1	For ARXD024GLEH
Washer	8	For installing indoor unit	Drain hose	1	For installing drain hose
Coupler heat insulation (Small)	1	For indoor side pipe joint (Liquid pipe)	Hose band	1	For installing drain hose
Coupler heat insulation (Large)	1	For indoor side pipe joint (Gas pipe)	Drain hose installation B	1	Insulates the drain hose
Cable tie (Large)	4	For fixing the coupler heat insulation	Installation template	1	For positioning the indoor unit
Cable tie (Medium)	2	For transmission cable and remote controller cable binding			

INDOOR UNITS

INDOOR UNITS

11-8. Low static pressure duct type (High efficiency)

Name and shape	Q'ty	Application	Name and shape	Q'ty	Application
Operating manual	1		M10 nut A (with flange)	4	For suspending the indoor unit from ceiling
Installation manual	1		M10 nut B (with spring lock washer)	4	For suspending the indoor unit from ceiling
Operating manual (CD-ROM)	1		Hanger	4	For suspending the indoor unit from ceiling
Cable tie (Large)	5	For fixing the connection pipe (large and small) and drain cap	Drain hose	1	For installing drain hose
Cable tie (Medium)	3	For transmission cable and remote controller cable binding	Hose band	1	For installing drain hose
Coupler heat insulation (Small)	1	For indoor side pipe joint (Liquid pipe)	Drain hose insulation	2	Insulates drain hose and drain cap
Coupler heat insulation (Large)	1	For indoor side pipe joint (Gas pipe)			

INDOOR UNITS

11-9. Medium static pressure duct type

Name and shape	Q'ty	Application	Name and shape	Q'ty	Application
Operating manual	1		M10 nut A (with flange)	4	For suspending the indoor unit from ceiling
Installation manual	1		M10 nut B (with spring lock washer)	4	For suspending the indoor unit from ceiling
Operating manual (CD-ROM)	1		Hanger	4	For suspending the indoor unit from ceiling
Cable tie (Large)	5	For fixing the connection pipe (large and small) and drain cap	Drain hose	1	For installing drain hose
Cable tie (Medium)	3	For transmission cable and remote controller cable binding	Hose band	1	For installing drain hose
Coupler heat insulation (Small)	1	For indoor side pipe joint (Liquid pipe)	Drain hose insulation	2	Insulates drain hose and drain cap
Coupler heat insulation (Large)	1	For indoor side pipe joint (Gas pipe)			

INDOOR UNITS

11-10. High static pressure duct type

Name and shape	Q'ty	Application	Name and shape	Q'ty	Application
Operating manual	1		Coupler heat insulation (Large)	1	For indoor side pipe joint (Gas pipe)
Installation manual	1		M10 nut A (with flange)	4	For suspending the indoor unit from ceiling
Operating manual (CD-ROM)	1		M10 nut B (with spring lock washer)	4	For suspending the indoor unit from ceiling
Cable tie (Large)	4	For fixing the connection pipe (large and small)	Drain hose	2	For installing drain hose VP25 (O.D. 32, I.D. 25)
Cable tie (Medium)	2	For transmission cable and remote controller cable binding	Hose band	2	For installing drain hose
Coupler heat insulation (Small)	1	For indoor side pipe joint (Liquid pipe)	Drain hose insulation	2	For installing drain hose

INDOOR UNITS

11-11. Compact floor type

Name and shape	Q'ty	Application	Name and shape	Q'ty	Application
Operating manual	1		Tapping screw	8	For wall hook bracket installation
Operating manual (CD-ROM)	1		Cloth tape	1	For indoor unit installation
Installation manual	1		Push mount cable tie	1	For transmission cable and remote controller cable binding
Wall bracket	1	For indoor unit installation	Air cleaning filter	2	For installation, refer to the "CLEANING AND CARE" in the operating manual

INDOOR UNITS

11-12. Floor/Ceiling type

Name and shape	Q'ty	Application	Name and shape	Q'ty	Application
Operating manual	1		Tapping screw	6	For fixing the wall bracket
Installation manual	1		Coupler heat insulation	2	For indoor side pipe joint
Operating manual (CD-ROM)	1		Cable tie (Large)	4	For fixing the coupler heat insulation
Cover plate (Left)	1		Cable tie (Medium)	2	For transmission cable and remote controller cable binding
Cover plate (Right)	1		Drain hose	1	For installing drain hose
Tapping screw	2		Hose band	1	For installing drain hose
Installation template	1	For positioning the indoor unit For under ceiling type	Drain hose insulation	1	Adhesive type 100 × 220 mm
Bracket (Left)	1	For suspending the indoor unit from ceiling	VT wire	1	For fixing the drain hose L = 280 mm
Bracket (Right)	1	For suspending the indoor unit from ceiling	Insulation (pipe)	1	Adhesive type 160 × 110 mm
M10 nut A (with flange)	4	For suspending the indoor unit from ceiling	Silencer pipe	1	Connect the silencer pipe to the small (liquid) pipe
Wall bracket	2	For suspending the indoor unit on the wall			

INDOOR UNITS

INDOOR UNITS

Optional parts		
Name and shape	**Parts No.**	**Application**
Auxiliary pipe	9374714025	For indoor side pipe joint (For AB∗A024GTEH)

INDOOR UNITS

11-13. Ceiling type

Name and shape	Q'ty	Application	Name and shape	Q'ty	Application
Operating manual	1		Coupler heat insulation (Large)	2	For indoor side pipe joint (Gas pipe)
Installation manual	1		Cable tie (Extra large)	4	For fixing the coupler heat insulation
Operating manual (CD-ROM)	1		Cable tie (Large)	2	For fixing the coupler heat insulation
Drain hose	1	For installing drain hose	Cable tie (Medium)	2	For transmission cable and remote controller cable binding
Hose band	1	For installing drain hose	M10 nut A (with flange)	4	For installing the indoor unit
Drain hose insulation	1	Adhesive type 100 × 220 mm	M10 nut B (with spring lock washer)	4	For installing the indoor unit
VT wire	1	For fixing the drain hose L = 280 mm	Installation template	1	For positioning the indoor unit
Coupler heat insulation (Small)	1	For indoor side pipe joint (Liquid pipe)	Auxiliary pipe assembly	1	For connecting the piping

INDOOR UNITS

11-14. Wall mounted type

■ Models: AS∗A004GCGH, AS∗A007GCGH, AS∗A009GCGH, AS∗A012GCGH, AS∗A014GCGH, AS∗E004GCEH, AS∗E007GCEH, AS∗E009GCEH, AS∗E012GCEH, and AS∗E014GCEH

Name and shape	Q'ty	Application	Name and shape	Q'ty	Application
Operating manual	1		Cloth tape	1	For indoor unit installation
Operating manual (CD-ROM)	1		Air cleaning filter	2	For installation, refer to the "CLEANING AND CARE" in the operating manual
Installation manual	1		Air cleaning filter frame	2	For installation, refer to the "CLEANING AND CARE" in the operating manual
Wall hook bracket	1	For indoor unit installation	Seal A	1	It is used when the diameter of gas pipe is Ø12.70 mm or more. It is necessary when using 014 model.
Tapping screw	5	For wall hook bracket installation			

INDOOR UNITS

INDOOR UNITS

■ Models: AS∗A18GBCH and AS∗A24GBCH

Name and shape	Q'ty	Application	Name and shape	Q'ty	Application
Operating manual	1		Tapping screw	8	For wall hook bracket installation
Installation manual	1		Air cleaning filter	2	For installation, refer to the "CLEANING AND CARE" in the operating manual
Operating manual (CD-ROM)	1		Air cleaning filter frame	2	For installation, refer to the "CLEANING AND CARE" in the operating manual
Wall hook bracket	1	For indoor unit installation	Drain hose insulation	1	For drain hose installation
Cable tie	1	For transmission and remote controller cable binding	Connecting cable	1	For wired remote controller installation
Cloth tape	1	For indoor unit installation			

■ Models: AS∗A030GTEH and AS∗A034GTEH

Name and shape	Q'ty	Application	Name and shape	Q'ty	Application
Operating manual	1		Drain hose insulation	1	For drain hose installation
Operating manual (CD-ROM)	1		Cloth tape	1	For indoor unit installation
Installation manual	1		Cable tie	2	For transmission and remote controller cable binding
Wall hook bracket	1	For indoor unit installation	Air cleaning filter	2	For installation, refer to the "CLEANING AND CARE" in the operating manual
Tapping screw	8	For wall hook bracket installation	Air cleaning filter frame	2	For installation, refer to the "CLEANING AND CARE" in the operating manual

INDOOR UNITS

INDOOR UNITS

Refrigerant R410A INVERTER

AIRSTAGE™ Variable Refrigerant Flow System

5. CONTROL SYSTEM

CONTENTS

5. CONTROL SYSTEM

1. Control system 05-1

1-1. Control system design example.....05-1
1-2. System configuration examples.....05-2
1-3. Features of control system 05-11
1-4. Wiring system 05-12
1-5. Control device design limitation 05-13

2. Control units 05-15

2-1. System controller (UTY-APGXZ1) 05-15
2-2. System controller lite (UTY-ALGXZ1) 05-19
2-3. Touch panel controller (UTY-DTG∗Z1) 05-24
2-4. Central remote controller (UTY-DCG∗Z∗) 05-37
2-5. Group remote controller (UTY-CGG∗).....05-46
2-6. Wired remote controller (Touch panel: UTY-RNR∗Z∗).....05-50
2-7. Wired remote controller (UTY-RLR∗) 05-57
2-8. Wired remote controller (UTY-RCR∗Z1) 05-63
2-9. Wired remote controller (UTY-RNK∗).....05-67
2-10. Simple remote controller (With operation mode: UTY-RSR∗) 05-72
2-11. Simple remote controller (With operation mode: UTY-RSK∗).....05-77
2-12. Simple remote controller (Without operation mode: UTY-RHR∗) 05-82
2-13. Simple remote controller (Without operation mode: UTY-RHK∗) 05-87
2-14. Wireless remote controller (UTY-LNH∗).....05-92
2-15. IR receiver unit (UTB-YWC) 05-96
2-16. IR receiver unit (UTY-TRHX).....05-99
2-17. IR receiver unit (For cassette type: UTY-LRH∗B1).....05-102
2-18. IR receiver unit (For circular flow cassette type: UTY-LBHXD).....05-104
2-19. Human sensor kit (For circular flow cassette type: UTY-SHZXC).....05-106
2-20. Remote sensor unit (UTY-XSZX) 05-108
2-21. Group control method.....05-110
2-22. Comparison table of controllers 05-112

3. Adaptor/Convertor units 05-114

3-1. Network converter (UTY-VTGX).....05-114
3-2. Network converter (UTY-VTGXV).....05-120
3-3. Network converter (UTY-VGGXZ1) 05-126
3-4. Network converter for LonWorks (UTY-VLGX).....05-131
3-5. KNX converter for VRF (UTY-VKGX) 05-140
3-6. KNX converter for indoor unit (UTY-VKSX) 05-147
3-7. Modbus converter for VRF (UTY-VMGX) 05-153
3-8. Modbus converter for indoor unit (UTY-VMSX) 05-160
3-9. BACnet gateway (Hardware: UTY-VBGX).....05-166
3-10. BACnet gateway (Software: UTY-ABGXZ1).....05-174
3-11. Wireless LAN adapter (UTY-TFSXZ1).....05-179
3-12. Signal amplifier (UTY-VSGXZ1) 05-185

CONTENTS (continued)

3-13. External switch controller (UTY-TERX).....05-190
3-14. External switch controller (UTY-TEKX).....05-200
4. Service and web monitoring tool.....05-206
4-1. Service tool (UTY-ASGXZ1).....05-206
4-2. Web monitoring tool (UTY-AMGXZ1).....05-210

1. Control system

1-1. Control system design example

Advanced integrated control system example

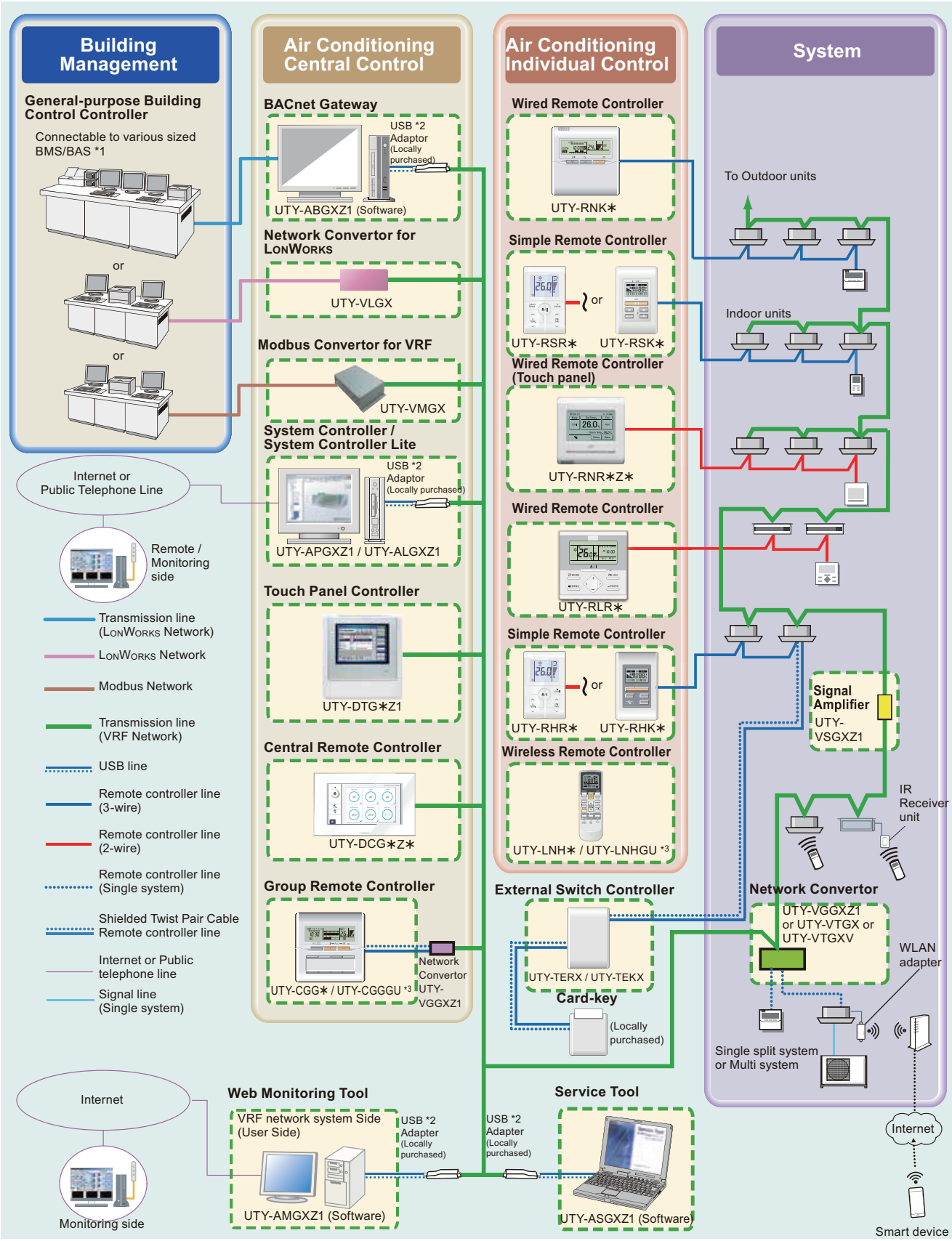

*1: BMS/BAS: Building Management System / Building Automation System.
*2: Echelon U10 USB Network Interface – TP/FT-10 Channel (Model number: 75010R)
*3: UTY-LNHGU and UTY-CGGGU are for UAE market only.

1-2. System configuration examples

■ Individual control

Wired Remote Controller (2-wire)

- Up to 16 indoor units can be controlled with one wired remote controller.
- Wired (Touch panel) and wireless remote controllers can be used jointly.
- 4 remote controllers can be connected with single indoor unit.

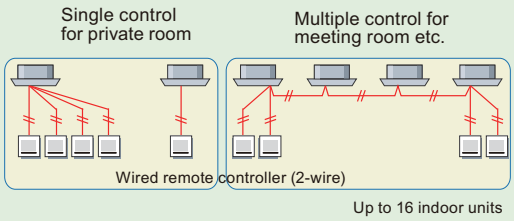

Wired Remote Controller (3-wire)

- Up to 16 indoor units can be controlled with one wired remote controller.
- Wired, simple, and wireless remote controllers can be used jointly.
- 2 remote controllers can be connected with single indoor unit.

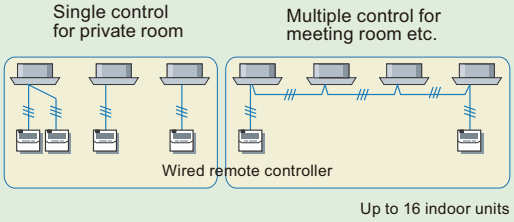

Simple Remote Controller (2-wire)

- Up to 16 indoor units can be controlled with one simple remote controller.
- Enables easy control of basic functions by the hotel or office guest.
- Wired, simple, and wireless remote controllers can be used jointly.
- 4 remote controllers can be connected with single indoor unit.

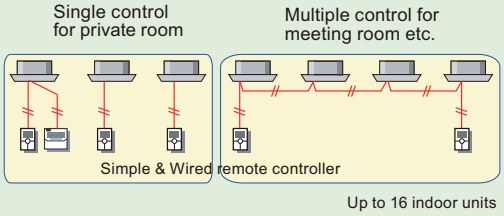

Simple Remote Controller (3-wire)

- Up to 16 indoor units can be controlled with one simple remote controller.
- Enables easy control of basic functions by the hotel or office guest.
- Wired, simple, and wireless remote controllers can be used jointly.
- 2 remote controllers can be connected with single indoor unit.

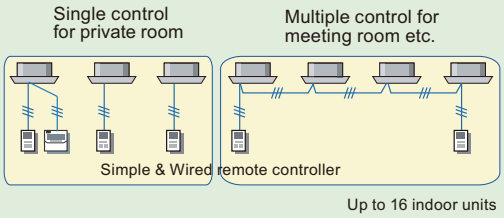

Wireless Remote Controller

- Up to 16 indoor units can be controlled with one wireless remote controller.
- Wired, simple, and wireless remote controllers can be used jointly.

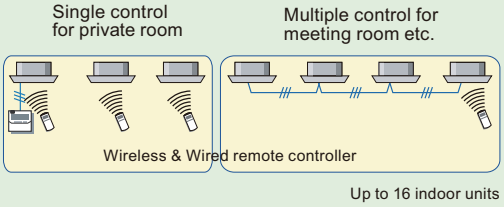

CONTROL SYSTEM

External Switch Controller

- Up to 16 indoor units can be controlled with one external switch controller.
- In combination with a locally purchased card-key switch or other sensor, External switch controller allows control of basic functions by the hotel or office guest.

Single control for hotel room with switch

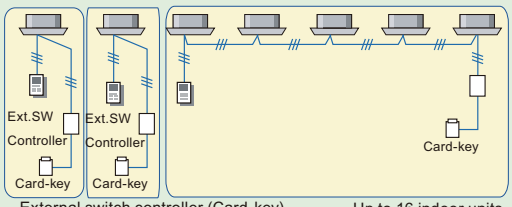

External switch controller (Card-key) & Wired remote controller

Up to 16 indoor units

Single Split or Big Multi System Connectability

- Single spilit system or Big multi system can be connected to the VRF network system and can be controlled from Touch panel controller or System controller.

Combination with Single split or Big multi type

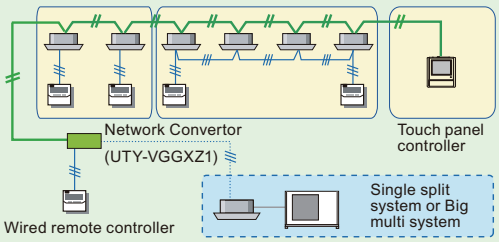

CONTROL SYSTEM

■ Central control

Group Remote Controller

- Up to 8 remote controller groups can be controlled with one group remote controller.
- Up to 4 Group remote controllers can be connected to a single network convertor (UTY-VGGXZ1).
- One network convertor (UTY-VGGXZ1) is allowed 2 refrigerant systems.
- Up to a total of 16 network convertors, central remote controllers and touch panel controllers, group remote controller and network convertor for LONWORKS can be connected to single VRF network system.

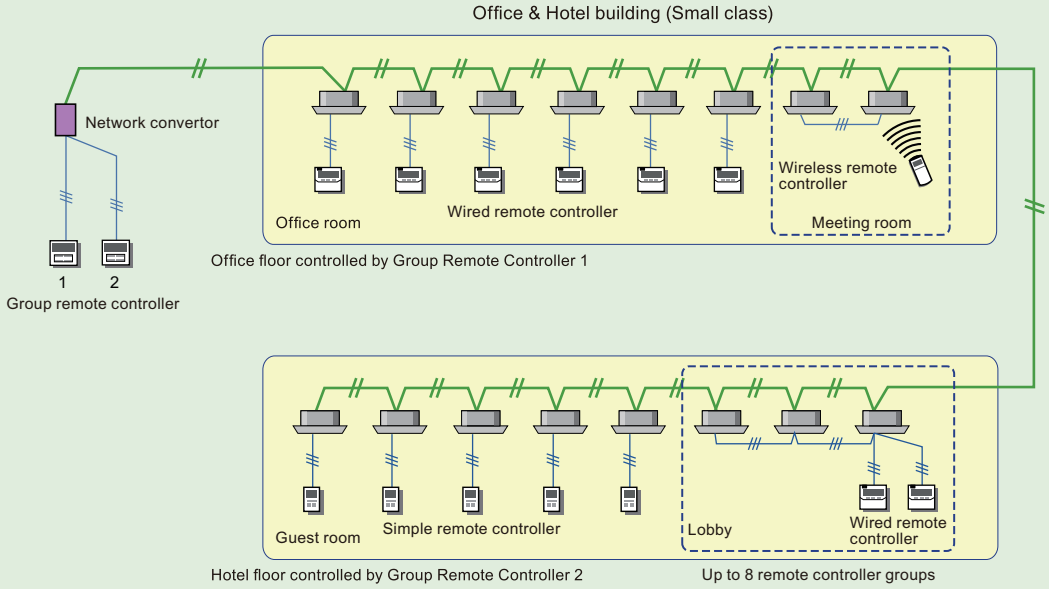

Central Remote Controller

- Up to 100 indoor units / 16 groups can be controlled with one central remote controller.
- The sum total of the Touch panel controller, Central remote controller, Network convertor for Group remote controller , Modbus convertor and Network convertor for LONWORKS is a maximum of 16.

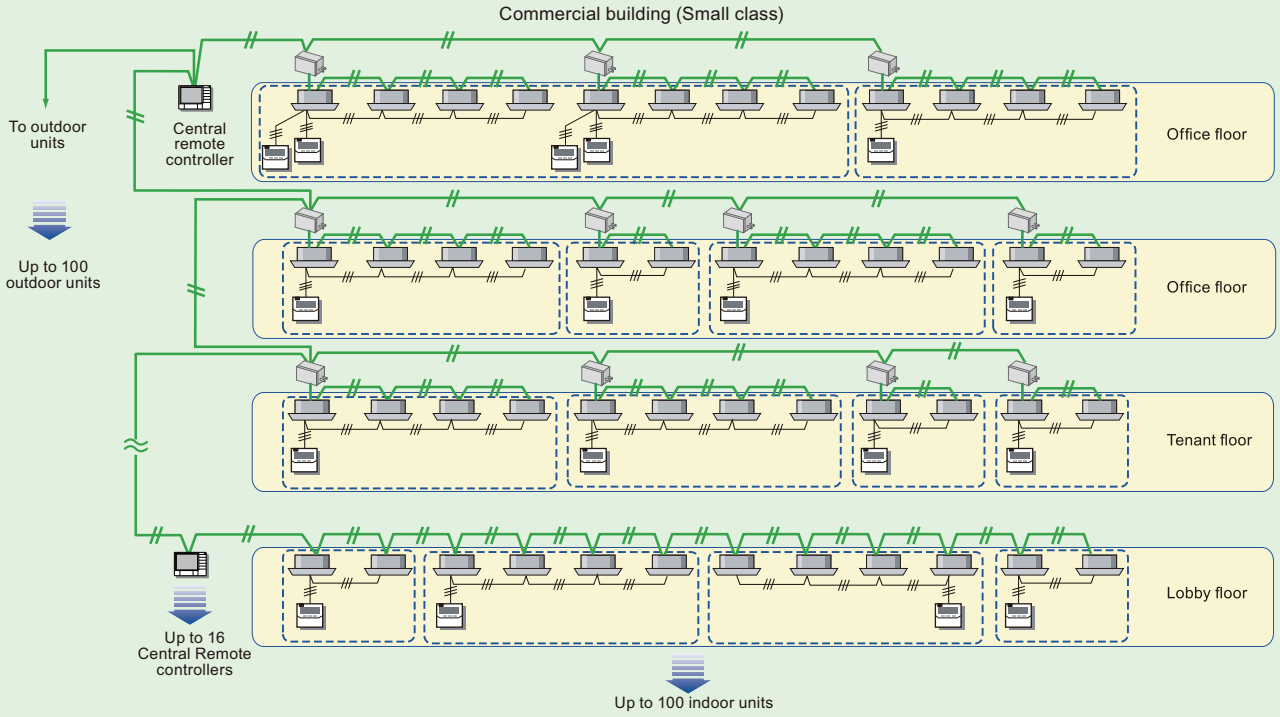

CONTROL SYSTEM

CONTROL SYSTEM

Touch Panel Controller

- Up to 400 indoor units / 400 groups can be controlled with one touch panel controller.
- Up to a total of 16 network convertors, central remote controllers and touch panel controllers, group remote controller and network convertor for LONWORKS can be connected to a single VRF network system.

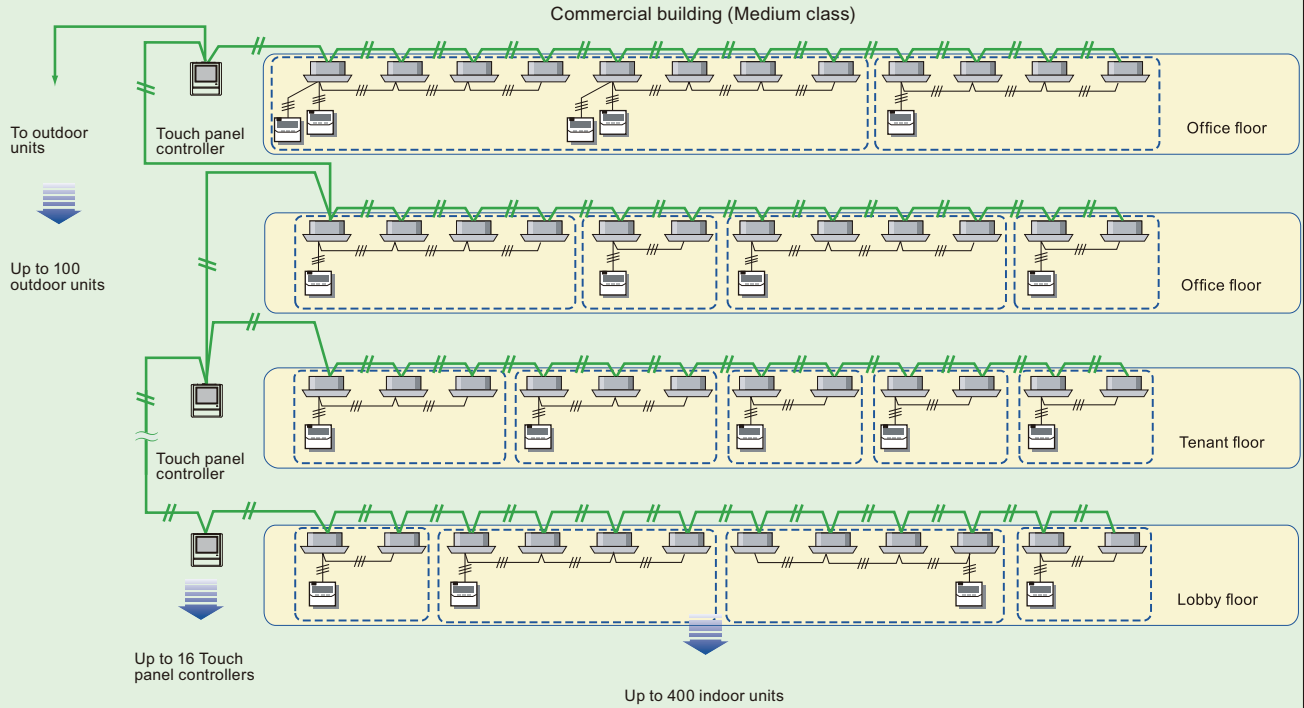

System Controller Lite

- UP to 400 indoor units / 400 groups can be controlled with one System Controller Lite.

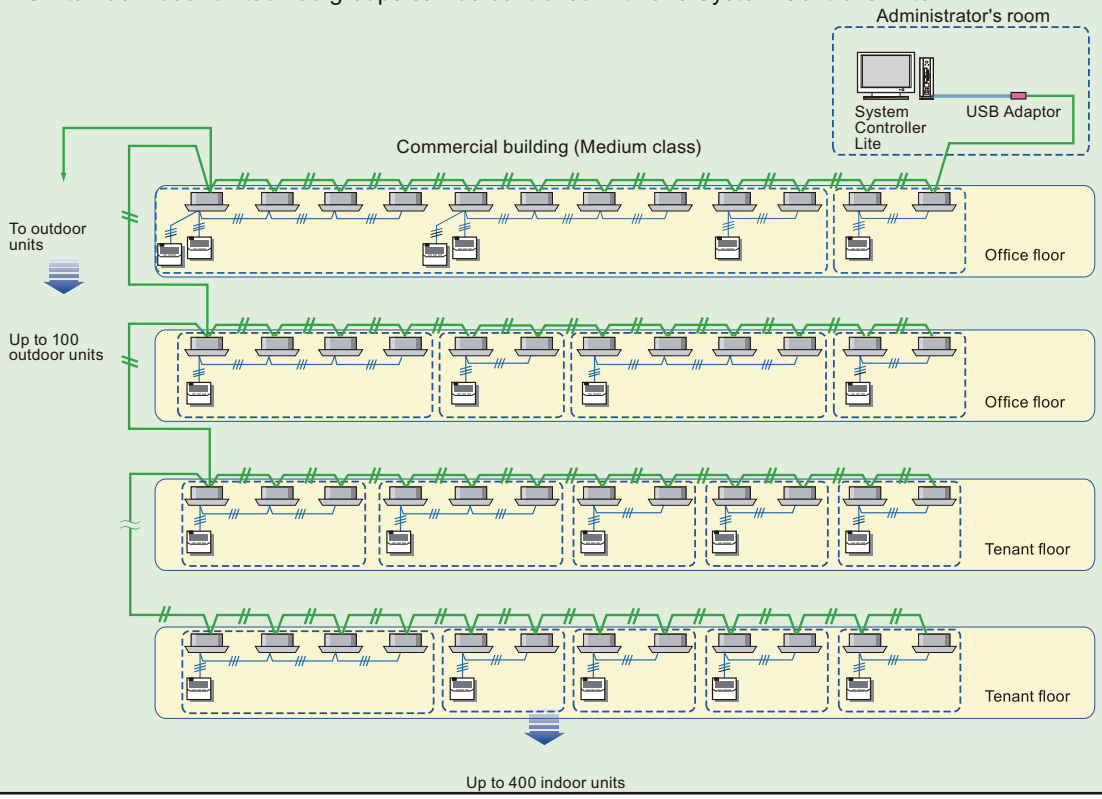

CONTROL SYSTEM

CONTROL SYSTEM

System Controller

- UP to 1600 (400 x 4 VRF network system) indoor units / 1600 groups can be controlled with one System Controller.
- Incorporates a function that automatically calculates electrical charge.

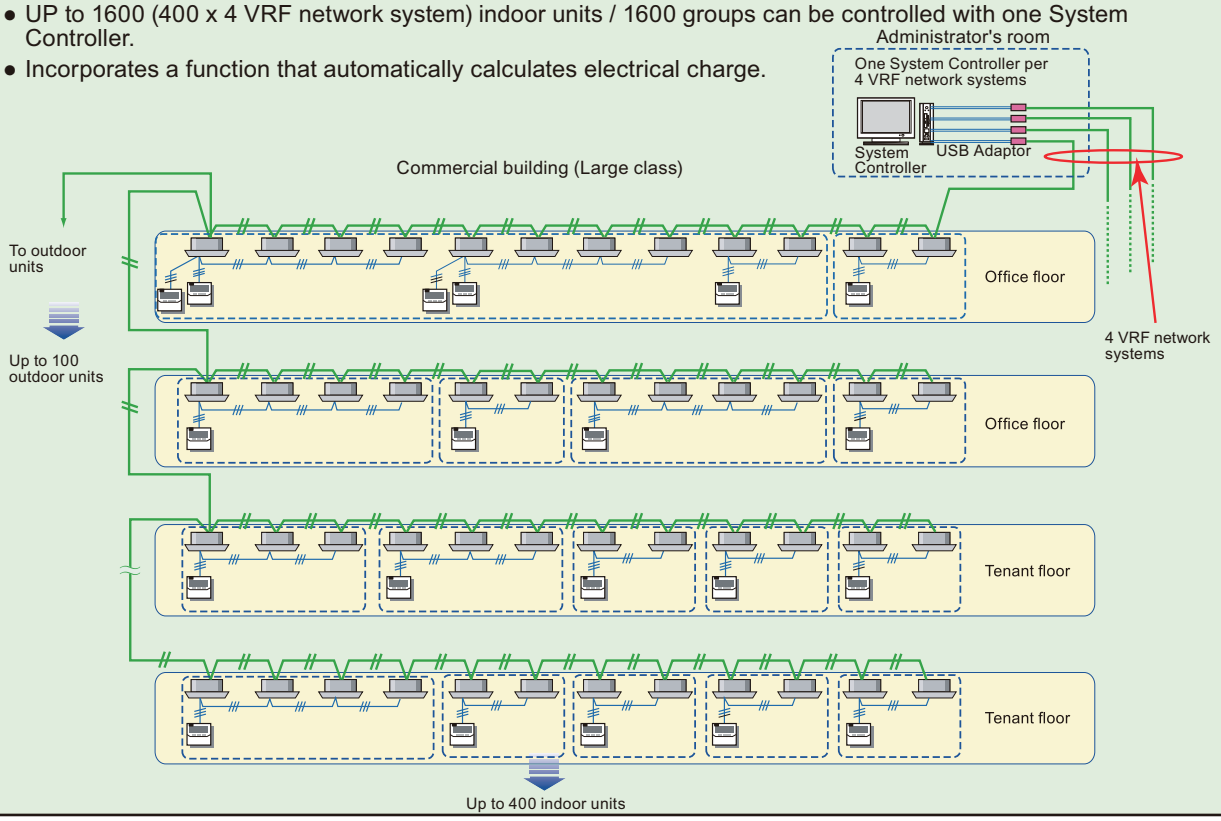

CONTROL SYSTEM

CONTROL SYSTEM

On-site central control and remote central control can be performed by system controller.

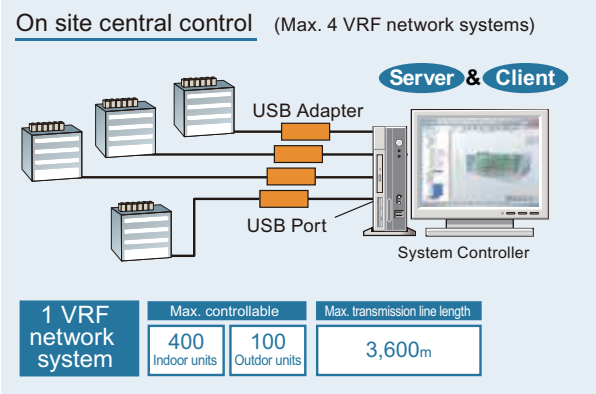

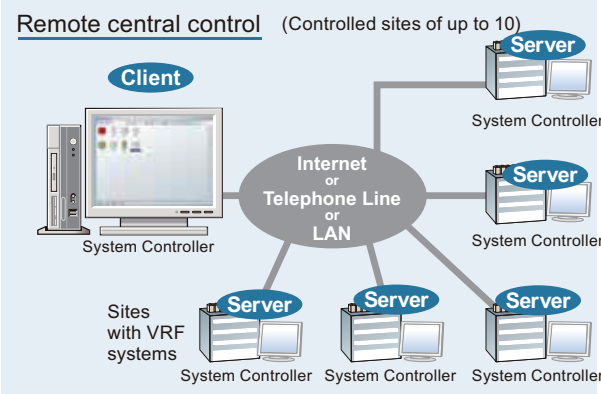

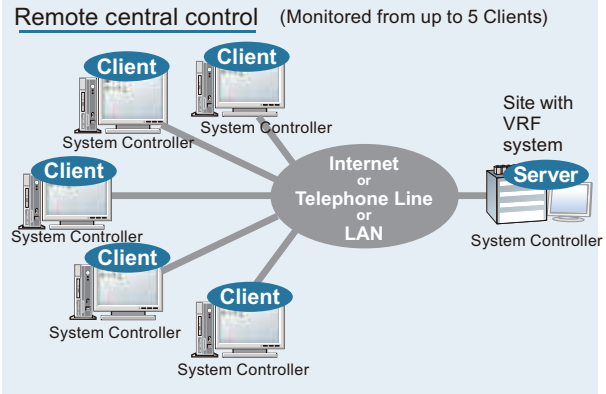

Remote central control can be performed by touch panel controller.

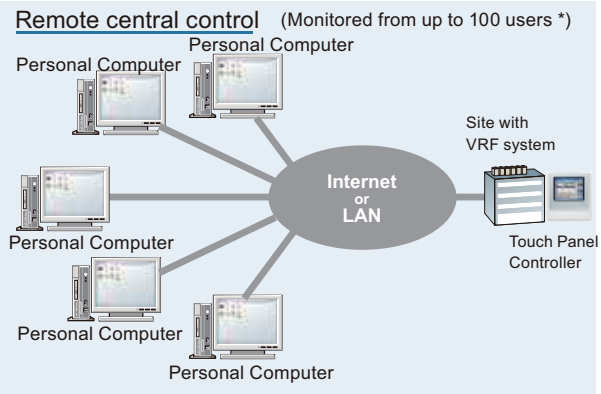

*: Up to 4 administrators and 10 general users can log in simultaneously.

CONTROL SYSTEM

■ Indoor unit type and applicable control method

Indoor unit type	Wired remote controller (Touch panel)	Wired remote controller			Simple remote controller	
	UTY-RNR∗Z∗	UTY-RLR∗	UTY-RCR∗Z1	UTY-RNK∗	UTY-RSR∗ UTY-RHR∗	UTY-RSK∗ UTY-RHK∗
Compact cassette	○	○	○	—	○	—
Circular flow cassette	○	○	○	—	○	—
4-way flow cassette	○	○	○	—	○	○
3D flow cassette	○	○	○	—	○	—
One way flow cassette	○	○	○	—	○	—
Low static pressure duct (Mini duct)	○	○	○	—	○	—
Low static pressure duct (Slim duct)/Slim concealed floor	○	○	○	—	○	—
Low static pressure duct (High efficiency)	○	○	○	—	○	—
Medium static pressure duct	○	○	○	—	○	—
High static pressure duct	○	○	○	—	○	—
Compact floor	○	○	○	—	○	—
Compact floor (EEV external)	○	○	○	—	○	—
Floor/Ceiling	○	○	○	—	○	—
Ceiling	○	○	○	—	○	—
Wall mounted	○	○	○	○*	○	○*
Wall mounted (EEV external)	○	○	○	○*	○	○*

- *: It is not connectable with indoor unit AS∗∗004/007/009/012/014GC∗H and AS∗A030/034GTEH in wall mounted type.

CONTROL SYSTEM

Indoor unit type	Wireless remote controller	External switch controller		Wireless LAN adapter
	UTY-LNH∗	UTY-TERX	UTY-TEKX	UTY-TFSXZ1
Compact cassette	○	○	—	○
Circular flow cassette	○*1	○	—	○
4-way flow cassette	○*2	○	—	—
3D flow cassette	○*3	○	—	○
One way flow cassette	○*3	○	—	○
Low static pressure duct (Mini duct)	○*3	○	—	○
Low static pressure duct (Slim duct)/Slim concealed floor	○*3	○	—	○
Low static pressure duct (High efficiency)	○*3	○	—	○
Medium static pressure duct	○*3	○	—	○
High static pressure duct	○*3	○	—	○
Compact floor	○	○	—	○
Compact floor (EEV external)	○	○	—	○
Floor/Ceiling	○	○	—	○
Ceiling	○	○	—	○
Wall mounted	○	○	○*4	○*5
Wall mounted (EEV external)	○	○	○*4	○

- *1: IR receiver unit (optional part: UTY-LBHXD) is necessary.
- *2: IR receiver unit (optional part: UTY-LRH∗B1) is necessary.
- *3: IR receiver unit (optional part: UTY-TRHX) is necessary.
- *4: It is not connectable with indoor unit AS∗∗004/007/009GTEH, AS∗∗012/014GCGH, and AS∗A030/034GTEH in wall mounted type.
- *5: It is not connectable with AS∗A18/24GBCH in wall mounted type.

RELATED LINKS

"Compatibility of VRF system" in Chapter 9. NOTES on page 09-10

"Applicable parts" in Chapter 10. OPTIONAL PARTS on page 10-17

CONTROL SYSTEM

■ Convertors (Adaptors) and related devices (system)

Convertor (Adaptor)		Within VRF network system			
		System controller	System controller lite	Touch panel controller	Central remote controller
		UTY-APGXZ1	UTY-ALGXZ1	UTY-DTG∗Z1	UTY-DCG∗Z∗
Network converter	UTY-VTGX UTY-VTGXV	—	—	—	—
	UTY-VGGXZ1	—	—	—	—
USB adapter*	Locally purchased	○	○	—	—
Network converter for LonWorks	UTY-VLGX	—	—	—	—
BACnet gateway	UTY-VBGX UTY-ABGXZ1	—	—	—	—
Modbus converter	UTY-VMGX UTY-VMSX	—	—	—	—
KNX converter	UTY-VKGX UTY-VKSX	—	—	—	—

Convertor (Adaptor)		Within VRF network system			
		Group remote controller	Web monitoring tool	Service tool	BACnet gateway
		UTY-CGG∗	UTY-AMGXZ1	UTY-ASGXZ1	UTY-ABGXZ1
Network converter	UTY-VTGX UTY-VTGXV	—	—	—	—
	UTY-VGGXZ1	○	—	—	—
USB adapter*	Locally purchased	—	○	○	○
Network converter for LonWorks	UTY-VLGX	—	—	—	—
BACnet gateway	UTY-VBGX UTY-ABGXZ1	—	—	—	—
Modbus converter	UTY-VMGX UTY-VMSX	—	—	—	—
KNX converter	UTY-VKGX UTY-VKSX	—	—	—	—

*: Echelon U10 USB Network Interface – TP/FT-10 Channel (Model number: 75010R)

Convertor (Adaptor)		VRF network system ↔ Other system		Single split system ↔ Other system
		Single split system/ Multi system	BMS/BAS	
Network converter	UTY-VTGX UTY-VTGXV	○	—	—
	UTY-VGGXZ1	○	—	—
USB adapter*	Locally purchased	—	—	—
Network converter for LonWorks	UTY-VLGX	—	○	—
BACnet gateway	UTY-VBGX UTY-ABGXZ1	—	○	—
Modbus converter	UTY-VMGX	—	○	—
	UTY-VMSX	—	—	○
KNX converter	UTY-VKGX	—	○	—
	UTY-VKSX	—	—	○

*: Echelon U10 USB Network Interface – TP/FT-10 Channel (Model number: 75010R)

CONTROL SYSTEM

1-3. Features of control system

■ Simple wiring system

- 1 transmission line can interlink all equipments regardless refrigerant circuit.
- Non polar 2-conductor transmission cable.
- Central control equipment can be connected anywhere on the transmission line, with no need to bring from the outdoor unit.
  - Making up the network system easily
  - Saving the total wiring length
  - Preventing incorrect connection
  - Saving installation time

■ Adaption to large scale buildings

- 1 VRF network system allows to form large scale application as follows:
  - Total transmission wiring length can be extended up to 3,600 m with signal amplifier unit.
  - Up to 400 indoor units per group
  - Up to 100 outdoor units per group
  - Touch panel controller can be used for primary central control.
  - Multiple touch panel controllers may be sued to provide convenient control for multiple convertor. (For details, refer to "Network converter (UTY-VTGX)" on page 05-114 and "Network converter (UTY-VTGXV)" on page 05-120.)
  - By adopting a separate interface, it is possible to connect other products and systems by FUJITSU GENERAL such as single type models (excluding some models), J series or multi air conditioner for buildings (e.g. Big multi). Refer to "Network converter (UTY-VTGX)" on page 05-114 and "Network converter (UTY-VTGXV)" on page 05-120.
- System controller allows to control up to 4 VRF network systems (max. 1,600 indoor units), suitable huge scale application.

■ Reliability and easy maintenance

- Stand-alone transmission network, allows each equipment to operate individually, thus failure of the units does not affect other indoor units operation.
- When a failure occurs, the error code is displayed on the individual controller and central controller excepting wireless remote controller.
- Also error histories can memorized by each individual controller and central controller excepting wireless remote controller.
- System controller and Web monitoring tool allow to monitor operation status in real time via Internet, and enable quick diagnoses.
- Maintenance works is improved efficiency, because Service tool can be connected to anywhere on the transmission line.

CONTROL SYSTEM

1-4. Wiring system

- Wiring configuration of the control system is made of power source wiring, transmission wiring, and remote controller wiring.
- Total wiring length (total length of transmission line) can be extended up to 3,600 m by using signal amplifier.

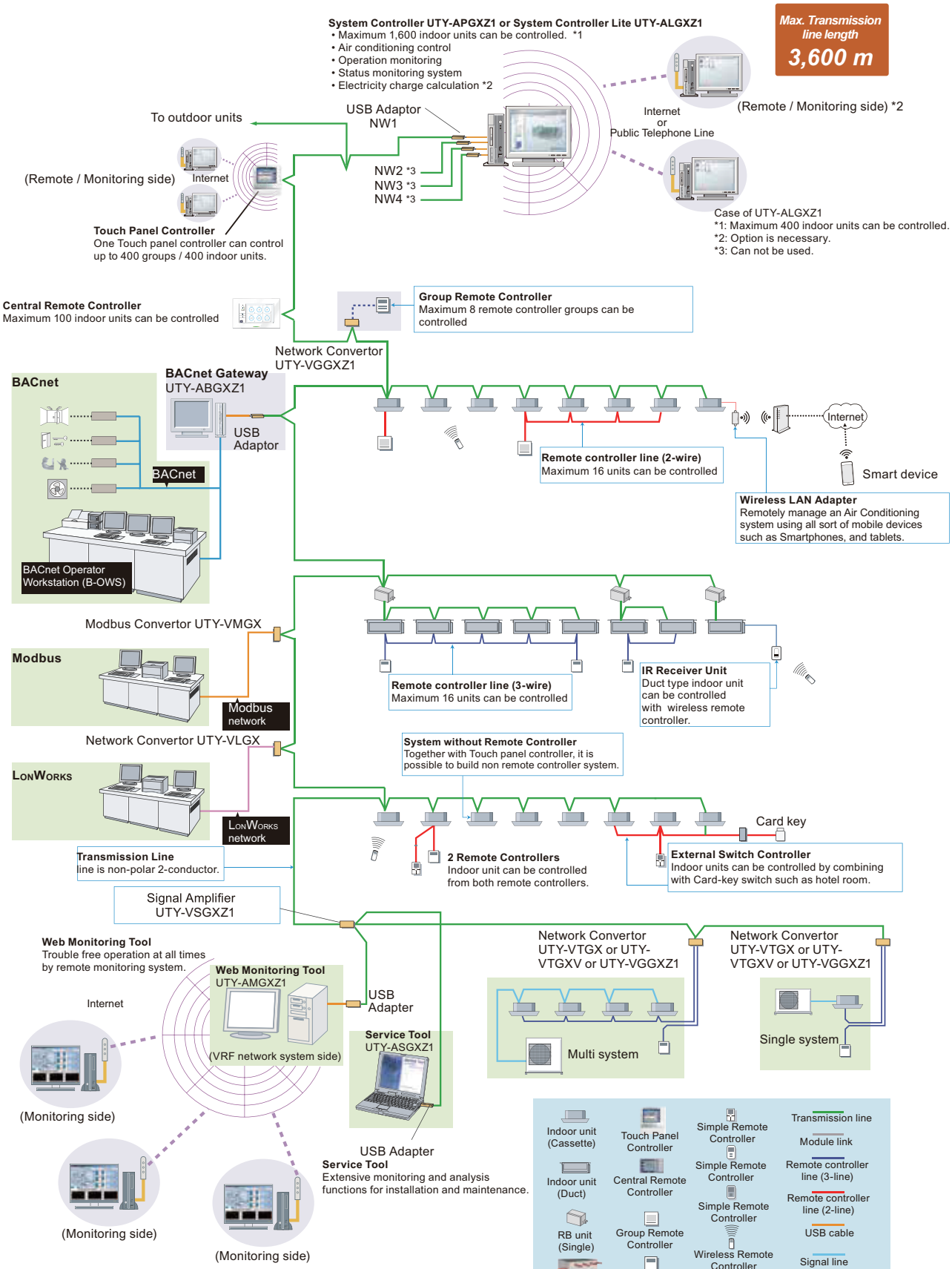

Combination of individual remote controller

Wired, simple and wireless remote controllers can be used jointly.

CONTROL SYSTEM

1-5. Control device design limitation

● Central control

Central controller		Necessary device	Maximum units number		
			Connectable units	Manageable indoor units	Connectable outdoor units
System controller	UTY-APGXZ1	USB adapter	1/system	1,600 (4 VRF networks)	400 (4 VRF networks)
System controller lite	UTY-ALGXZ1	USB adapter	1/system	400 (1 VRF network)	100 (1 VRF network)
Group remote controller	UTY-CGG∗	UTY-VGGXZ1	4/UTY-VGGXZ1	2 refrigerant system	
Touch panel controller	UTY-DTG∗Z1	—	16/system	400	100
Central remote controller	UTY-DCG∗Z∗	—		100	

Adaptor/Convertor		Necessary device	Maximum units number		
			Connectable units	Manageable indoor units	Connectable outdoor units
Network converter	UTY-VTGX UTY-VTGXV UTY-VGGXZ1	—	100/system	—	—
Network converter for LonWorks*1	UTY-VLGX	—	1/system	128*2	100
BACnet gateway	UTY-VBGX	—	4/system	128*2	100
	UTY-ABGXZ1	USB adapter	1/system	1,600 (4 VRF networks)	400 (4 VRF networks)
Modbus converter	UTY-VMGX	—	9/system	128*2	100
Modbus converter	UTY-VMSX	—	—	1	—
KNX converter	UTY-VKGX	—	9/system	128*2	100
KNX converter	UTY-VKSX	—	—	1	—
Signal amplifier	UTY-VSGXZ1	—	40/system	—	—
Wireless LAN adapter	UTY-TFSXZ1	—	—	—	—

- *1: A maximum of 4 Network converters for LonWorks can be connected to 1 BMS.
- *2: Maximum controllable indoor unit number per one convertor. (For proper configuration, refer to system diagram of each device.)

Service and Maintenance		Necessary device	Maximum units number		
			Connectable units	Manageable indoor units	Connectable outdoor units
Service tool	UTY-ASGXZ1	USB adapter	1/system	400	100
Web monitoring tool	UTY-AMGXZ1			1,600 (4 VRF networks)	400 (4 VRF networks)

CONTROL SYSTEM

● Individual control

Individual controller		Connectable units number	Remarks
Wireless remote controller	UTY-LNH∗		
Wired remote controller (Touch panel)	UTY-RNR∗Z∗	4/Remote control group	2-wire type
Wired remote controller	UTY-RLR∗		
Simple remote controller (With operation mode)	UTY-RSR∗		
Simple remote controller (Without operation mode)	UTY-RHR∗		
Wired remote controller	UTY-RCR∗Z1	1/Indoor unit	2-wire type
Wired remote controller	UTY-RNK∗	2/Remote control group	3-wire type
Simple remote controller (With operation mode)	UTY-RSK∗		
Simple remote controller (Without operation mode)	UTY-RHK∗		

Adaptor/Convertor		Connectable units number	Remarks
External switch controller	UTY-TERX	2/Remote control group	2-wire or 3-wire type
	UTY-TEKX		3-wire type
IR receiver unit	UTB-YWC UTY-LRH∗B1 UTY-TRHX UTY-LBHXD	1/Indoor unit	

CONTROL SYSTEM

2. Control units

RELATED LINKS

"Controllers" in Chapter 1. GENERAL INFORMATION on page 01-7

2-1. System controller (UTY-APGXZ1)

This system realizes the advanced general monitoring & control of VRF system from small scale buildings to large scale buildings.

- Maximum of 4 network systems, 1,600 indoor units can be controlled.
- In addition to air conditioning precision control function, central remote control, electricity charge calculation, schedule management, and energy saving functions are strengthened and building manager and owner needs are met.
- Corresponds to 7 different languages. (English, Chinese, French, German, Spanish, Russian, and Polish)
- Connection between VRF network system to personal computer is possible via small U10 USB interface. However, both U10 USB interface and personal computer are locally purchased items.
- Extended feature* supported by use of options.

NOTES:

- *: Electricity charge apportionment using electricity meter, energy saving control. (without V and S series)
- Different VRF series may be connected for each of the 4 VRF networks supported by the product, but different series may not coexist within the same network. (VR-IV, J-IV, J-IVS, J-IVL, VR-II, V-III, J-III, J-IIS, and J-IIIL can exist together in same network. V and S can exist together in same network, too.)

■ Accessory

Name and shape	Q'ty	Application
WHITE-USB-KEY (software protection key with software)	1	Software protection key to be connected to an USB port on the PC that System controller is installed. System controller runs only on a PC with this WHITE-USB-KEY. However, this WHITE-USB-KEY is not required for remote VRF Explorer software.

■ Available option

Option	Model name	Remark
Energy manager	UTY-PEGXZ1	Additional support for energy saving function and electricity charge apportionment using electricity meter.
Prepaid air conditioning	UTY-PPGXP2	Prepaid management of VRF air conditioner is performed and collection of charge for air conditioning is supported for building administrator.

CONTROL SYSTEM

■ System diagram

- System controller may be used on site or remotely over various networks for remote central control.
- System controller consists of VRF Controller software and VRF Explorer software, both software are working together.
- VRF Controller software runs in the background and communicate with VRF System.
- VRF Explorer software provides user interface and communicate with VRF Controller.
- VRF Controller and VRF Explorer software may run in a single PC or in different PCs separated by network.
- VRF Explorer software does not require WHITE-USB-KEY (Software protection key).

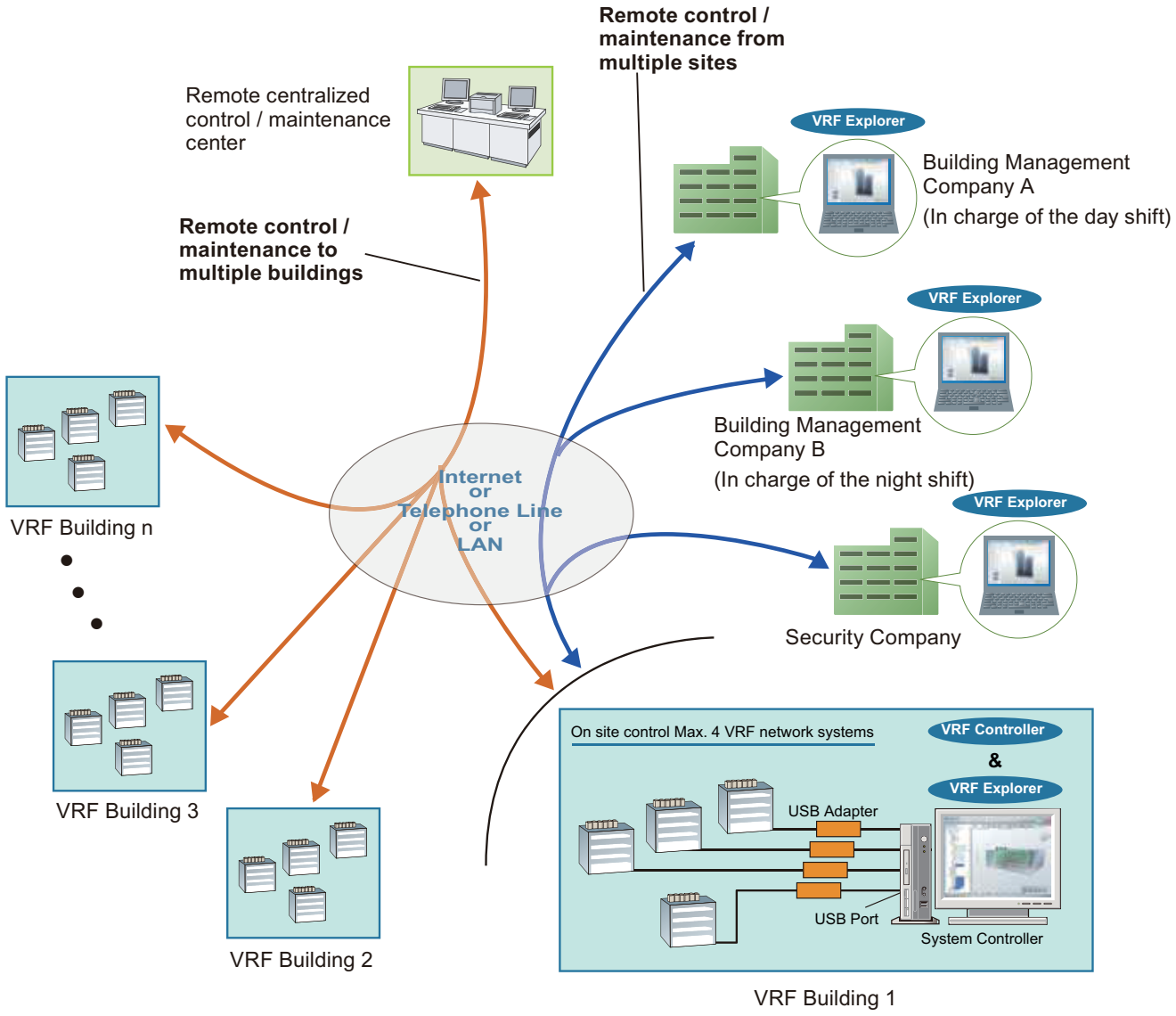

CONTROL SYSTEM

■ Software configuration

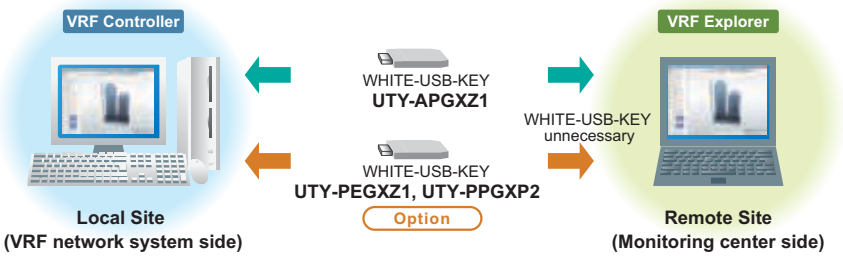

- **Any number can be installed in remote site personal computers.**
  - System controller (UTY-APGXZ1) can be installed in the local site PCs (VRF controller) connected to the VRF network system.
  - Multiple remote site PCs (VRF explorer) can be connected to VRF controller via Internet or LAN.

  Just this single product creates the control, management, and monitoring environment for the customer's properties including remote operation.

  NOTES:
  - WHITE-USB-KEY is not required for PCs on the remote site.
  - Some function, such as equipment registration and input/output are invalid on the remote site.

- **Optional software to strengthen the energy saving function**
  Installing the optional UTY-PEGXZ1 will strengthen the energy saving management function.

■ Other required devices (Locally purchased)

- Personal computer that satisfies the following system requirements

Personal computer system requirement	
Operating system	• Microsoft Windows 7 Home Premium (32-bit or 64-bit) SP1 • Microsoft Windows 7 Professional (32-bit or 64-bit) SP1 • Microsoft Windows 8.1 (32-bit or 64-bit) • Microsoft Windows 8.1 Pro (32-bit or 64-bit) • Microsoft Windows 10 Home (32-bit or 64-bit) • Microsoft Windows 10 Pro (32-bit or 64-bit) Supported languages: English, Chinese, French, German, Russian, Spanish, and Polish
CPU	Intel Core i3 2 GHz or higher
Memory	• 2 GB or more (for Windows 7 [32-bit]) • 4 GB or more (for Windows 7 [64-bit], Windows 8.1, and Windows 10)
HDD	40 GB or more of free space
Display	1,024 × 768 or higher resolution
Interface	• Ethernet port (for getting access to the Internet using LAN) or Modem (for getting access to the Internet using public telephone line) • USB ports (Maximum of 5 ports) (Required only for the server PC that works as VRF controller) – Maximum of 1 USB ports are required for WHITE-USB-KEY connection – Maximum of 4 USB ports are required for Echelon U10 USB Network Interface **NOTE:** Maximum number of required USB ports depends on the applicable system configuration.
Graphic accelerator	Microsoft DirectX 9.0c compatible
Software	Adobe Reader 9.0 or later

- Echelon U10 USB Network Interface – TP/FT-10 Channel (Model number: 75010R) (Required for each VRF network)

CONTROL SYSTEM

■ Specification summary

Type		Function	UTY-APGXZ1	UTY-PEGXZ1 (Option)	UTY-PPGXP2 (Option)	Remark
System specification		Max. system controller per VRF network	1	—	—	
		Max. VRF networks supported	4	—	—	Site with up to 4 VRF networks may administrated with 1 system controller.
		Max. indoor units/remote controller groups per VRF network	400	—	—	
		Max. indoor units/remote controller groups per system controller	1,600	—	—	4 VRF networks
Site supervision		Multiple site display	10	—	—	
		2D/3D graphical layout view	●	—	—	2D: Site, Floor 3D: Building Quick control from display available.
		List display	●	—	—	Quick control from display available.
		Tree display	●	—	—	Quick control from display available.
Operation control	Individual	Start/Stop, Operation mode, Room temperature	●	—	—	
		Fan speed, Airflow direction	●	—	—	
		Economy mode	●	—	—	
		Antifreeze	●	—	—	
		Remote control prohibition setting	●	—	—	
		Temperature upper and lower limit setting	●	—	—	
		Filter sign reset	●	—	—	
		Human sensing	●	—	—	
	Schedule	Annual schedule	●	—	—	Week of year, day of month, day of week setting Holiday special day settings
		Low noise mode weekly schedule	●	—	—	Outdoor unit control only
	Group management	Number of groups	1,600	—	—	
		Group in group	3 levels	—	—	Level 1—2—3
		Max. overlap definitions	1,600	—	—	1 unit may belong to up to 1,600 groups.
		Auto generation	●	—	—	By site, building and floor
	Others	Memory operation	●	—	—	Operation pattern memorized and reused.
		Pattern operation	●	—	—	Reuse operation pattern once used.
Operation status monitoring		Controlled status	●	—	—	See items controlled by operation.
		Special operation	●	—	—	Defrost, oil recovery
Room temperature		Room temperature	●	—	—	*
Error management		Error notification	●	—	—	
		Audible alarm	●	—	—	
		Error e-mail notification	●	—	—	
History management		Error history	1 year	—	—	
		Operation history and status history	1 year	—	—	
Energy saving management		Indoor unit rotation	—	●	—	
		Outdoor unit capacity save	—	●	—	
		Peak cut control	—	1 month	—	
		Power consumption monitor	—	●	—	
		Electricity meters supported	—	200	—	Outdoor unit required per connection.
		Power consumption information	—	3 years	—	
Electricity charge apportionment		Apportionment charge calculation	●	—	—	
		Apportionment charge bill creation	●	—	—	
		Tenant (block) setting	1,600	—	—	
		Common facilities apportionment setting	●	—	—	
		Rated power consumption allotment setting	●	—	—	
		Electricity meters supported	—	200	—	Same meters used for energy saving.
		Electricity charge apportionment period	2 years	—	—	
		Prepaid air conditioning	—	—	●	
		Cooling and heating information	●	—	—	
Remote control		Internet, telephone line support	●	—	—	
		Max. client connection per server	5	—	—	
		Max. host connection from client	10	—	—	
		Data encryption	●	—	—	SSL used.
Others		External device control function	●	—	—	
		Web operation	●	—	—	
		User control	●	—	—	Authorization level setting
		Database import/export (manual)	●	—	—	
		Periodical backup	●	—	—	
		The refrigerant systems of non-operation status function	●	—	—	
		Auto start setting	●	—	—	
		Multiple language display	●	●	—	English, Chinese, French, German, Spanish, Russian, Polish
		Floor layout editor	●	—	—	
		Floor layout import/export	●	—	—	
		Online software update	●	—	—	

NOTES:

- *: To display room temperature on monitor, connect wired remote controller to indoor unit and perform function setting for detecting temperature using mounted sensor.
- In S and V series, there are some unusable functions, such as energy saving function and electricity meter use.
- The electricity charge apportionment function of VRF system can only be performed from one equipment simultaneously.

CONTROL SYSTEM

2-2. System controller lite (UTY-ALGXZ1)

System controller lite is advanced software of central controller for small and medium buildings. It can be supported by additional options such as electricity charge apportionment, remote monitoring, and energy saving in order to meet your demands.

- Supports 1 VRF network system and maximum of 400 controllable indoor units.
- Various high level functions from individual control to annual schedule management, operation history, and error history management.
- Corresponds to 7 different languages. (English, Chinese, French, German, Spanish, Russian, and Polish)
- Connection between VRF network system to personal computer is possible via small U10 USB interface. However, both U10 USB interface and personal computer are locally purchased items.
- Units status can be monitored and operated for each site, group, or unit.*

*: 2D floor layout/3D building display are not available. If you need these functions, use System controller.

■ Accessory

Name and shape	Q'ty	Application
WHITE-USB-KEY (software protection key with software)	1	Software protection key to be connected to an USB port on the PC that System controller is installed. System controller runs only on a PC with this WHITE-USB-KEY. However, this WHITE-USB-KEY is not required for remote VRF Explorer software.

■ Available option

Option	Model name	Remark
Electricity charge apportionment option	UTY-PLGXA2	Apportions the power used by indoor and outdoor units, and automatically calculation the electricity charge such as for hotels or multi-tenant buildings. Computation linked with an electric meter is also possible.
Remote access option	UTY-PLGXR2	VRF system can be monitored remotely from multiple PCs. Multiple VRF systems can be controlled or monitored from 1 PC.
Energy saving option	UTY-PLGXE2	A variety of energy saving operations can be set and managed depending on the season, weather, and time period.
Prepaid air conditioning	UTY-PLGXP2	Prepaid management of VRF air conditioner is performed and collection of charge for air conditioning is supported for building administrator.
External device control	UTY-PLGXX2	By enabling central control by third-party external device, burden on maintenance and administration of the devices by the building administrator is reduced.

CONTROL SYSTEM

■ System diagram

- System controller lite may be used on site or remotely over various networks for remote central control.*
- System controller lite consists of VRF Controller software and VRF Explorer software, both software are working together.
- VRF Controller software runs in the background and communicate with VRF System.
- VRF Explorer software provides user interface and communicate with VRF Controller.
- VRF Controller and VRF Explorer software may run in a single PC or in different PCs separated by network.*
- VRF Explorer software does not require WHITE-USB-KEY (Software protection key).

*: Remote access option (UTY-PLGXR2) is necessary.

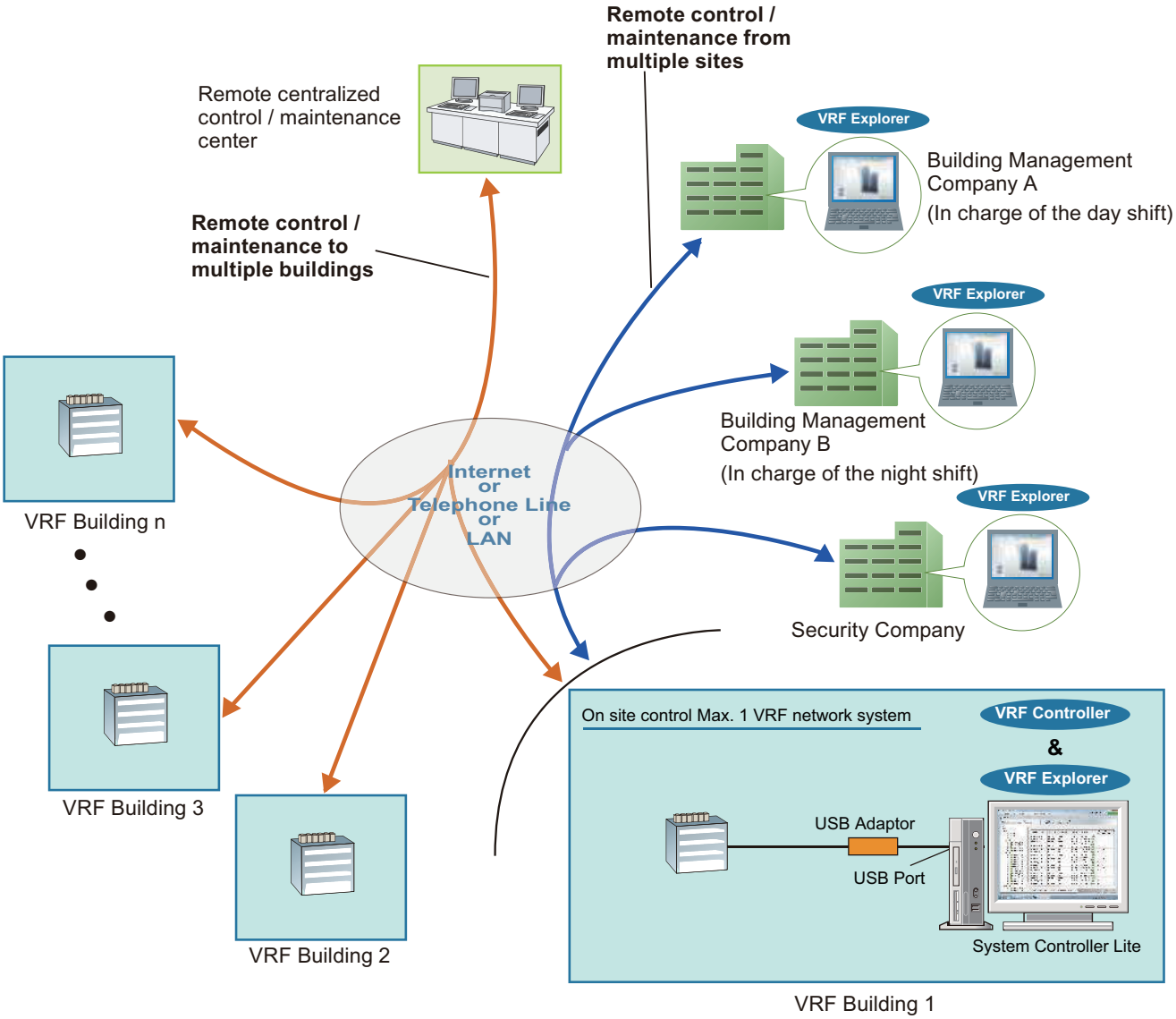

CONTROL SYSTEM

■ Software configuration

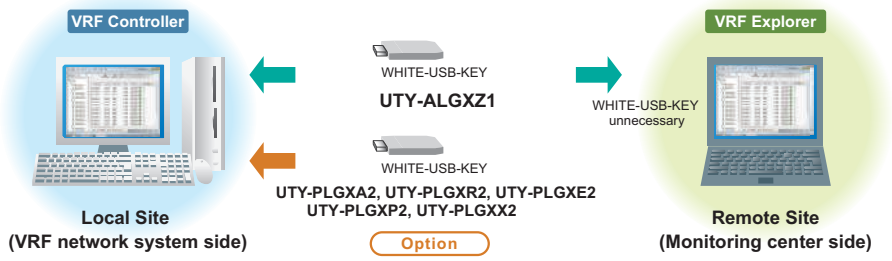

- **Any number can be installed in remote site personal computers.**
  - System controller lite (UTY-ALGXZ1) can be installed in the local site PCs (VRF controller) connected to the VRF network system.
  - Multiple remote site PCs (VRF explorer) can be connected to VRF controller via Internet or LAN.

  Just this single product creates the control, management, and monitoring environment for the customer's properties including remote operation.

  NOTES:
  - WHITE-USB-KEY is not required for PCs on the remote site.
  - Some function, such as equipment registration and input/output are invalid on the remote site.

- **Optional software to strengthen various function**
  - Electricity charge apportionment function can be added by installing optional UTY-PLGXA2.
  - Remote centralized control function can be added by installing optional UTY-PLGXR2.
  - Energy saving management function can be added by installing optional UTY-PLGXE2.
  - Prepaid management function can be added by installing optional UTY-PLGXP2.
  - External device control function can be added by installing optional UTY-PLGXX2.

CONTROL SYSTEM

■ Other required devices (Locally purchased)

- Personal computer that satisfies the following system requirements

Personal computer system requirement	
Operating system	• Microsoft Windows 7 Home Premium (32-bit or 64-bit) SP1 • Microsoft Windows 7 Professional (32-bit or 64-bit) SP1 • Microsoft Windows 8.1 (32-bit or 64-bit) • Microsoft Windows 8.1 Pro (32-bit or 64-bit) • Microsoft Windows 10 Home (32-bit or 64-bit) • Microsoft Windows 10 Pro (32-bit or 64-bit) Supported languages: English, Chinese, French, German, Russian, Spanish, and Polish
CPU	Intel Core i3 2 GHz or higher
Memory	• 2 GB or more (for Windows 7 [32-bit]) • 4 GB or more (for Windows 7 [64-bit], Windows 8.1, and Windows 10)
HDD	40 GB or more of free space
Display	1,024 × 768 or higher resolution
Interface	• Ethernet port (for getting access to the Internet using LAN) or Modem (for getting access to the Internet using public telephone line) • USB ports (Maximum of 2 ports) (Required only for the server PC that works as VRF controller) – 1 USB port is required for WHITE-USB-KEY connection – 1 USB port is required for Echelon U10 USB Network Interface **NOTE:** Maximum number of required USB ports depends on the applicable system configuration.
Graphic accelerator	Microsoft DirectX 9.0c compatible
Software	Adobe Reader 9.0 or later

- Echelon U10 USB Network Interface – TP/FT-10 Channel (Model number: 75010R) (Required for each VRF network)

CONTROL SYSTEM

■ Specification summary

Type		Function	UTY-AL-GXZ1	UTY-PLGXA2 (Option)	UTY-PLGXR2 (Option)	UTY-PLGXE2 (Option)	UTY-PLGXP2 (Option)	UTY-PLGXX2 (Option)	Remark
System specification		Max. system controller per VRF network	1	—	—	—	—	—	
		Max. VRF networks supported	1	—	—	—	—	—	
		Max. indoor units/remote controller groups per VRF network	400	—	—	—	—	—	
		Max. indoor units/remote controller groups per system controller	400	—	—	—	—	—	4 VRF networks
Site supervision		Multiple site display	10	—	—	—	—	—	
		2D/3D graphical layout view	—	—	—	—	—	—	
		List display	●	—	—	—	—	—	Quick control from display available.
		Tree display	●	—	—	—	—	—	Quick control from display available.
Operation control	Individual	Start/Stop, Operation mode, Room temperature	●	—	—	—	—	—	
		Fan speed, Airflow direction	●	—	—	—	—	—	
		Economy mode	●	—	—	—	—	—	
		Antifreeze	●	—	—	—	—	—	
		Remote control prohibition setting	●	—	—	—	—	—	
		Temperature upper and lower limit setting	●	—	—	—	—	—	
		Filter sign reset	●	—	—	—	—	—	
		Human sensing	●	—	—	—	—	—	
	Schedule	Annual schedule	●	—	—	—	—	—	Week of year, day of month, day of week setting Holiday special day settings
		Low noise mode weekly schedule	●	—	—	—	—	—	Outdoor unit control only
	Group management	Number of groups	400	—	—	—	—	—	
		Group in group	3 levels	—	—	—	—	—	Level 1—2—3
		Max. overlap definitions	400	—	—	—	—	—	1 unit may belong to up to 400 groups.
		Auto generation	●	—	—	—	—	—	By site, building and floor
	Others	Memory operation	●	—	—	—	—	—	Operation pattern memorized and reused.
		Pattern operation	●	—	—	—	—	—	Reuse operation pattern once used.
Operation status monitoring		Controlled status	●	—	—	—	—	—	See items controlled by operation.
		Special operation	●	—	—	—	—	—	Defrost, oil recovery
Room temperature		Room temperature	●	—	—	—	—	—	*
Error management		Error notification	●	—	—	—	—	—	
		Audible alarm	●	—	—	—	—	—	
		Error e-mail notification	●	—	—	—	—	—	
History management		Error history	1 year	—	—	—	—	—	
		Operation history and status history	1 year	—	—	—	—	—	
Energy saving management		Indoor unit rotation	—	—	—	●	—	—	
		Outdoor unit capacity save	—	—	—	●	—	—	
		Peak cut control	—	—	—	1 month	—	—	
		Power consumption monitor	—	—	—	●	—	—	
		Electricity meters supported	—	—	—	200	—	—	Outdoor unit required per connection.
		Power consumption information	—	—	—	3 years	—	—	
Electricity charge apportionment		Apportionment charge calculation	—	●	—	—	—	—	
		Apportionment charge bill creation	—	●	—	—	—	—	
		Tenant (block) setting	—	1,600	—	—	—	—	
		Common facilities apportionment setting	—	●	—	—	—	—	
		Rated power consumption allotment setting	—	●	—	—	—	—	
		Electricity meters supported	—	200	—	—	—	—	Same meters used for energy saving.
		Electricity charge apportionment period	—	2 years	—	—	—	—	
		Prepaid air conditioning	—	—	—	—	●	—	
		Cooling and heating information	—	●	—	—	—	—	
Remote control		Internet, telephone line support	—	—	●	—	—	—	
		Max. client connection per server	—	—	5	—	—	—	
		Max. host connection from client	—	—	10	—	—	—	
		Data encryption	—	—	●	—	—	—	SSL used.
Others		External device control function	—	—	—	—	—	●	
		Web operation	●	—	—	—	—	—	
		User control	●	—	—	—	—	—	Authorization level setting
		Database import/export (manual)	●	—	—	—	—	—	
		Periodical backup	●	—	—	—	—	—	
		The refrigerant systems of non-operation status function	●	—	—	—	—	—	
		Auto start setting	●	—	—	—	—	—	
		Multiple language display	●	●	●	●	—	—	English, Chinese, French, German, Spanish, Russian, Polish
		Floor layout editor	●	—	—	—	—	—	
		Floor layout import/export	●	—	—	—	—	—	
		Online software update	●	—	—	—	—	—	

NOTES:

- *: To display room temperature on monitor, connect wired remote controller to indoor unit and perform function setting for detecting temperature using mounted sensor.
- In S and V series, there are some unusable functions, such as energy saving function and electricity meter use.
- The electricity charge apportionment function of VRF system can only be performed from one equipment simultaneously.

CONTROL SYSTEM

2-3. Touch panel controller (UTY-DTG∗Z1)

- Large-sized 7.5 inch TFT color
- LCD easy finger touch operation
- Stylish shape and design to suit all application
- No additional component is required for installation.
- Up to 400 indoor units can be controlled.
- Selectable 2 display types (icon/list) in monitoring mode
- Corresponds to 7 different languages. (English, Chinese, French, German, Spanish, Russian, and Polish)

■ Accessory

Name and shape	Q'ty	Application
Installation plate	1	For Touch panel controller installation (It is attached to the back of the Touch panel controller)
Screw	8	Screw for Touch panel controller installation
Washer	8	Washer for Touch panel controller installation
Touch pen	1	Pen for Touch panel controller installation
Cable tie	4	For prevention dropping off of the cable
CD-ROM	1	Includes the operating manual and file making sheet of this controller
Installation manual	1	
Operation manual	1	

CONTROL SYSTEM

■ Available option

Option	Model name	Remark
Electricity charge apportionment option	UTY-PTGXA	Apportions the power used by indoor and outdoor units, and automatically calculation the electricity charge such as for hotels or multi-tenant buildings. Computation linked with an electric meter is also possible.

- Specifications

Number of sites	Max. 20
Number of contracts	Max. 400 (per site)
Number of blocks	Max. 1,600 (per site)
Data storage period	Max. 2 years

- Personal computer system requirements (for electricity charge apportionment tool)

Personal computer system requirement	
Operating system	• Microsoft Windows 7 Home Premium (32-bit or 64-bit) SP1 • Microsoft Windows 7 Professional (32-bit or 64-bit) SP1 • Microsoft Windows 8.1 (32-bit or 64-bit) • Microsoft Windows 8.1 Pro (32-bit or 64-bit) • Microsoft Windows 10 Home (32-bit or 64-bit) • Microsoft Windows 10 Pro (32-bit or 64-bit) Supported languages: English, Chinese, French, German, Russian, Spanish, and Polish
CPU	Intel Core i3 2 GHz or higher
Memory	• 2 GB or more (for Windows 7 [32-bit]) • 4 GB or more (for Windows 7 [64-bit], Windows 8.1, and Windows 10)
HDD	40 GB or more of free space
Display	1,024 × 768 or higher resolution
Interface	• USB port • Ethernet port (to communicate with TPC via LAN)
Software	Adobe Reader 9.0 or later
Optical drive	DVD-ROM drive

CONTROL SYSTEM

■ Functions

Item		Main unit	PC/Tablet	Description
Installation	Indoor unit registration	●	—	Indoor unit registration. Max. 400 units. (Set data can be written to and read from USB flash drive)
	Function settings	●	—	Temperature set point limitation, external input, central operation on/off setting
Monitor	Display switching	●	●	Icon display, List display
	Display units	●	●	All, Group, Individual (remote control group)
	Monitor contents (icon display)	●	●	Group name, operation, operation mode, set temperature, time, errors, timer setting, filter sign
	Monitor contents (list display)	●	●	Group name, operation, operation mode, set temperature, airflow, air direction, special operation, anti-freeze, time, errors, timer setting, filter sign, room temp., human sensor, set temp. range
	Error list	●	●	Group name, remote control group name, address, error code
	Special state	●	●	Display during special operation
Control	Control units	●	●	All, Group, Individual (remote control group)
	Control contents	●	●	Operation, operation mode, set temperature, airflow, RC prohibition, filter sign reset
	Detailed control contents	●	●	Air direction, energy saving, anti-freeze, test run
	Individual setting reset of airflow direction	—	●	Sets the position of indoor unit's airflow direction louver individually.
	Human sensor	—	●	Sets the human sensor on the indoor unit.
	Setting temperature limitation of room	●	●	Adjusts the upper and lower limits of temperature for the indoor unit.
Setting	Language setting*	●	●	Design considering multi-language correspondence
	Date and time	●	●	Time display switching, year/month/day display switching, system clock setting, summer time, Internet time adjustment setting
	Time zone	●	●	Set the time zone of the area where this unit is used.
	Panel cleaning and correction	●	—	Select display area for panel cleaning. User can select black screen on display.
	Group	●	●	Stages: Max. 3 stages settable up to 400 groups. (Set data can be written to and read from USB flash drive.)
	Back ground light and beep sound	●	—	Backlighting off time and brightness setting, beep sound operation setting
	Password	●	—	Management level: 3 kinds
	Schedule timer	●	●	Max. 30 items settable
	Temperature range	●	—	Celsius/Fahrenheit switching, cooling, heating, and AUTO each settable
	Network	●	●	Function of Email notification for malfunction, or electricity charge apportionment option is used via LAN
	Low noise operation	●	●	"Low noise operation" is set to all outdoor units registered by this controller.
	Electricity charge apportionment (Option)	●	●	Start/stop of ECA, importing/exporting of ECA setting, and exporting ECA data.
	Remote language additional registration	—	●	Additional language can be integrated on remote device by creating language database. Additional language is displayed on only the remote device and touch panel controller cannot be added other language.
	Auto OFF timer	—	●	Function to stop the operation automatically when a preset time lapses after turning on the operation
	Set temperature auto return	—	●	Function to restore the temperature to the original set temperature when a preset time lapses after changing the set temperature.
	Display item setting	—	●	Sets the items to be displayed on the monitor.
	Failure notification Email	—	●	Failure notification Email: Sends a notification Email to the preset Email address in the event of failure.
	Remote connection setting	—	●	Create Users: Max. 15 users, type, permissions, unit setting, automatic logout time
Maintenance	Error history	●	●	Recording of max. 10 errors for each touch panel controller and each indoor and outdoor unit
	Status history	●	●	Recording of max. 100 operations for each indoor unit Writable to USB flash drive
	Operation history	●	●	Recording of max. 10,000 operations Writable to USB flash drive
	TPC information	●	●	Version history, TPC MAC address, software version, Writing the TPC information
Others	External input/output	●	—	Input: Batch operation/stop, emergency stop, electricity meter Output: Operation monitoring, error

NOTES:

- *: Product specifications are subject to change without notice.
- When Start/Stop, operation mode setting, room temp. setting, fan speed setting, air flow direction setting, swing setting, economy mode, and anti freeze setting are changed frequently by using the central controller such as System controller, Touch panel controller, etc. or from Building Management System (BMS) via BACnet gateway or via Network converter, the number of operations for each indoor unit must not exceed 7,500 times/year.
  If the number of setting change exceeds the above specified number, the rewriting count limit of the non-volatile memory (built into the air conditioner and used for recording settings) will be exceeded, and may cause breakdown.

CONTROL SYSTEM

■ State transition diagram

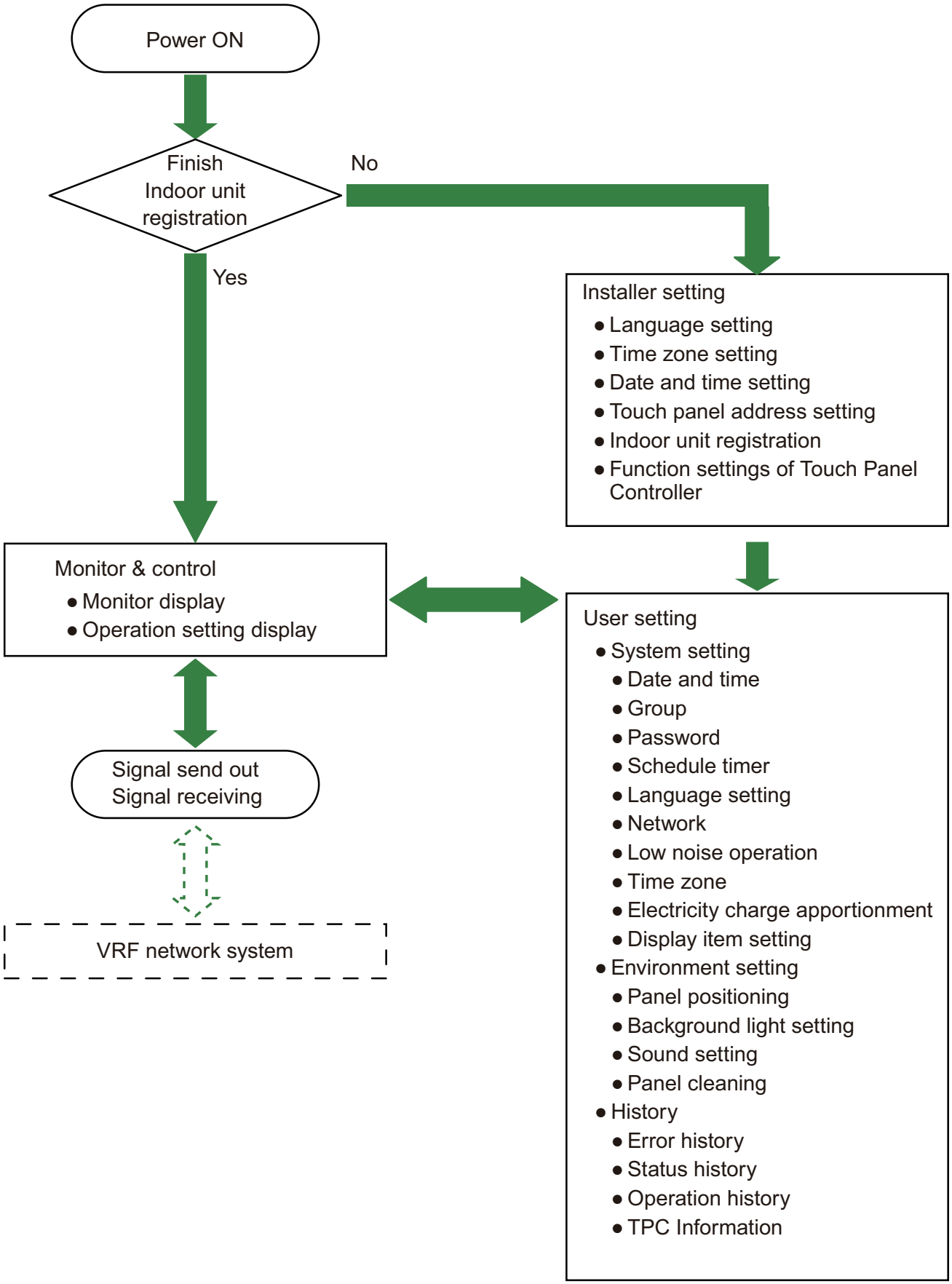

CONTROL SYSTEM

■ Main functions and screen examples

- **Monitor display example**
  An easy-to-use display mode can be selected.
  Easy-to understand GUI of adopted icon.

Icon display

List display

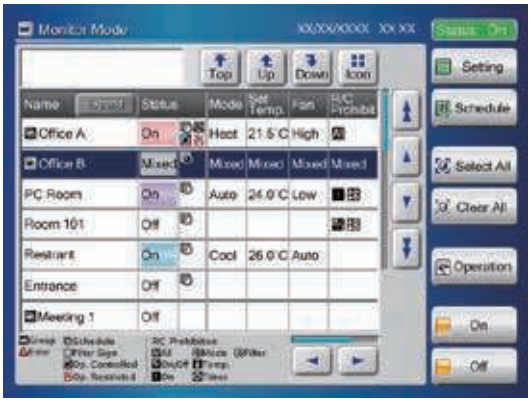

- **Operation mode setting example**
  Large button is designed for easy to access.

Operation setting screen

Optional setting screen

CONTROL SYSTEM

CONTROL SYSTEM

- **Group setting**
  Groups can be arbitrarily set in easy to manage units as shown in the figure.
  Control and monitoring are performed in these group units.

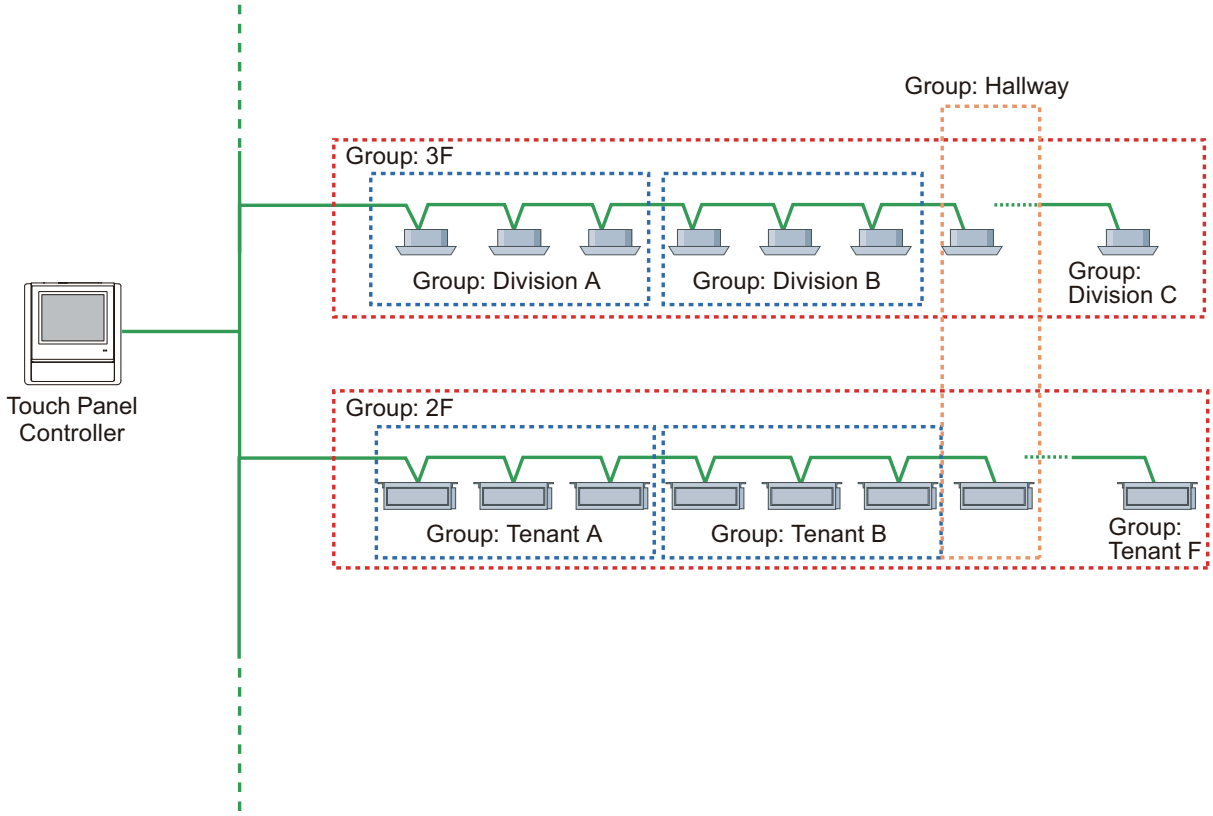

Group setting screen

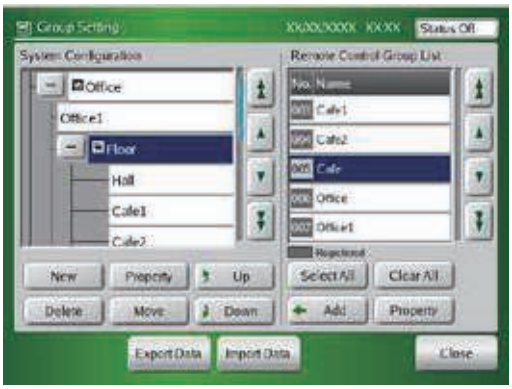

CONTROL SYSTEM

- **System schedule timer**
  Annual schedule can be set of a maximum 30 items.

Schedule setting screen

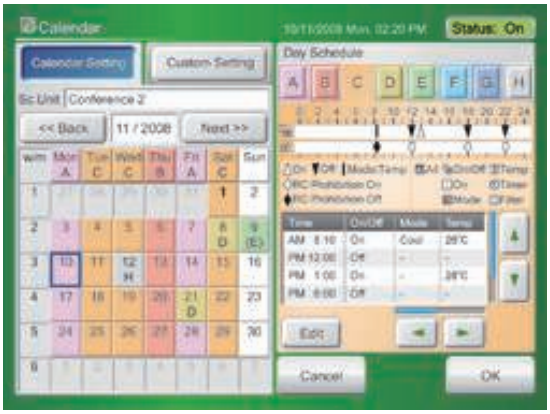

- **History recording and display**
  Error, status and operation histories can be recorded. Each recording can be also written to USB flash drive.
  – Error history: Max. 10 items recorded for each touch panel controller and each unit (indoor unit and outdoor unit).
  – Status history: Max. 100 operations recorded for each indoor unit of each room.
  – Operation hisotry: Max. 100 operations recorded.

Optional history screen

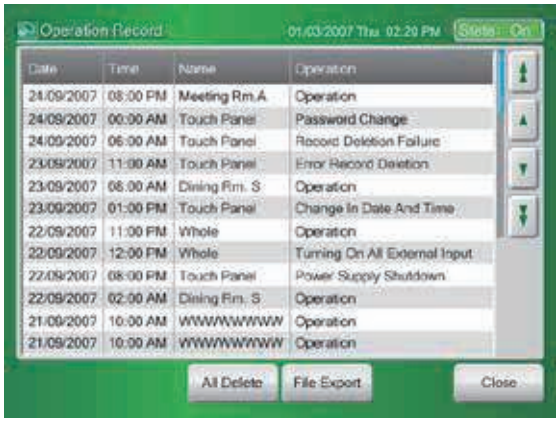

CONTROL SYSTEM

CONTROL SYSTEM

■ Screen examples (for remote monitoring)

- **Monitor mode main screen example**

Icon display

List display

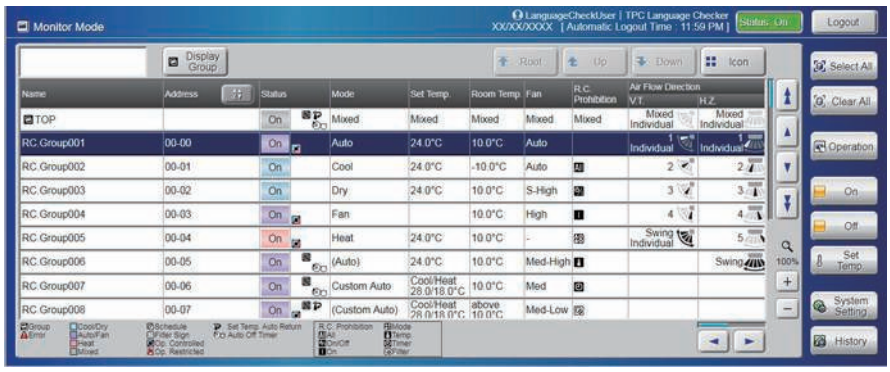

- **Control main screen example**

Operation setting screen

CONTROL SYSTEM

■ Dimensions

Unit: mm

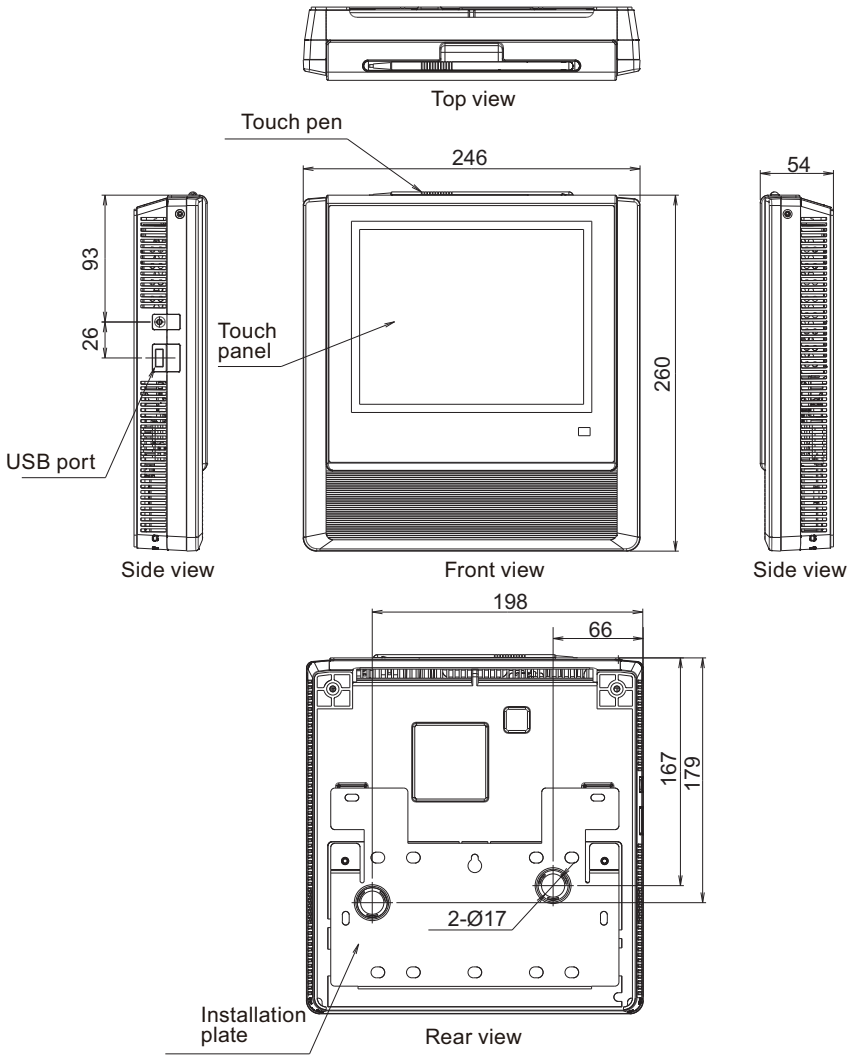

■ Mounting plate screw hole positions

Unit: mm

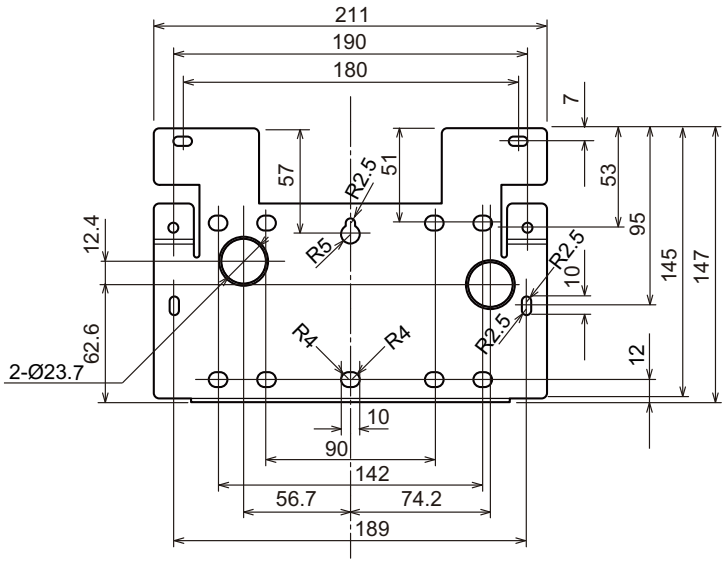

⚠ CAUTION

Refer to the mounting screw hole positions of the switch box that is to be installed in advance and check the compatibility.

CONTROL SYSTEM

■ Terminal names

Names of connection terminals in rear cover.

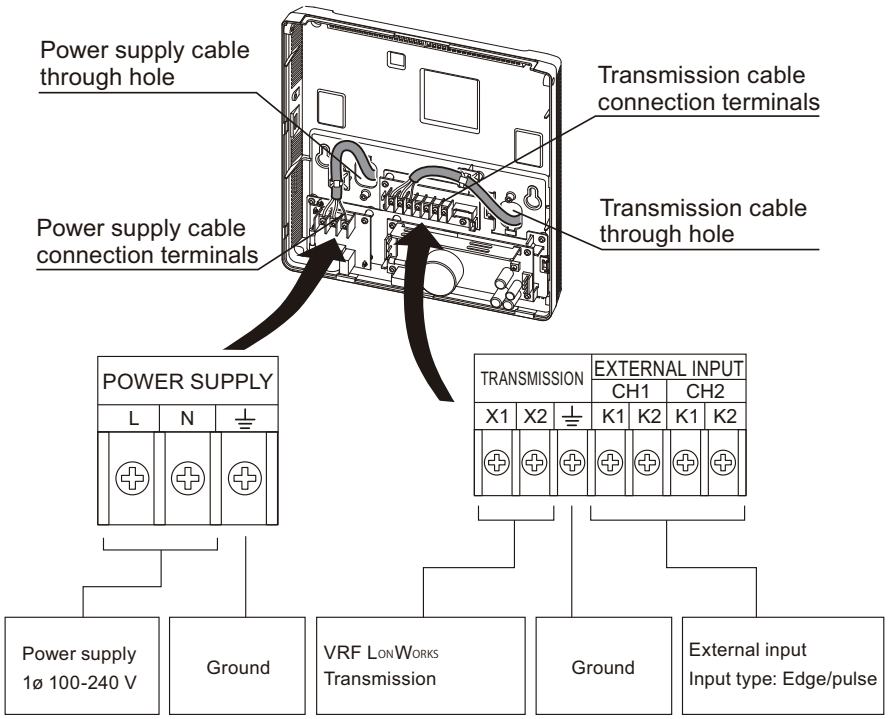

■ External input terminal

- Case 1: Batch start/stop and emergency stop commands

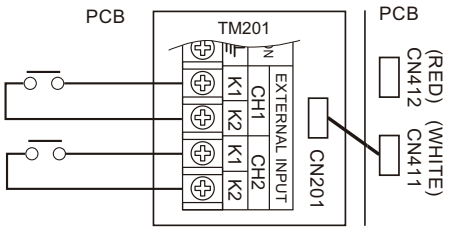

- Case 2: Electricity meter is connected

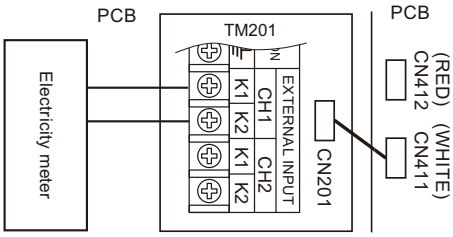

■ Installation space

When installing Touch panel controller in a row, keep the space shown below from the surrounding projecting parts.

Unit: mm

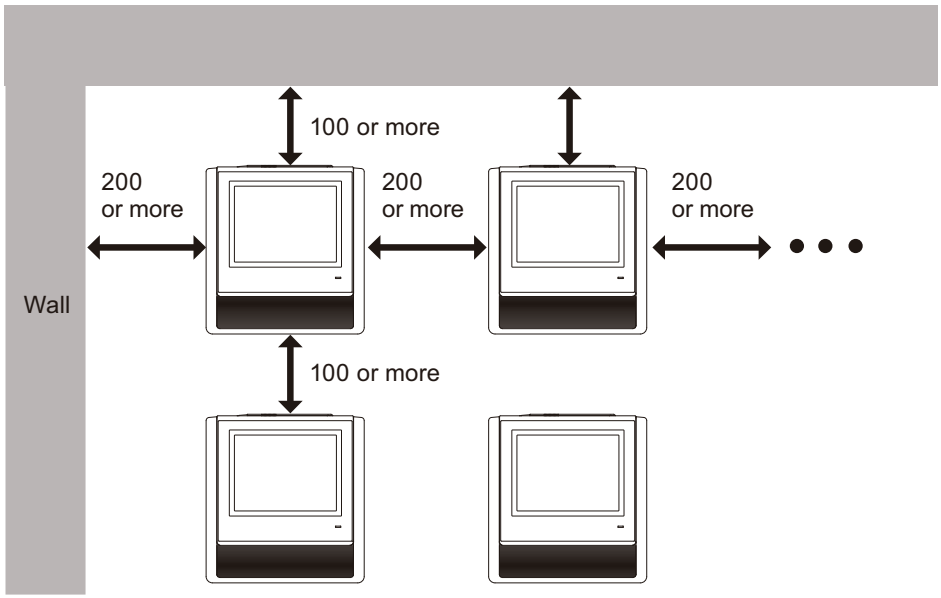

NOTE: The switch box that Touch panel controller is to be mounted to should be installed horizontally in advance.

⚠ CAUTION

Following installation positions are prohibited:

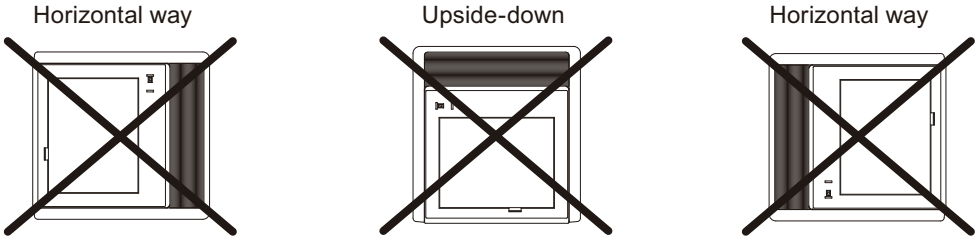

CONTROL SYSTEM

■ Installation

For details, refer to installation manual.

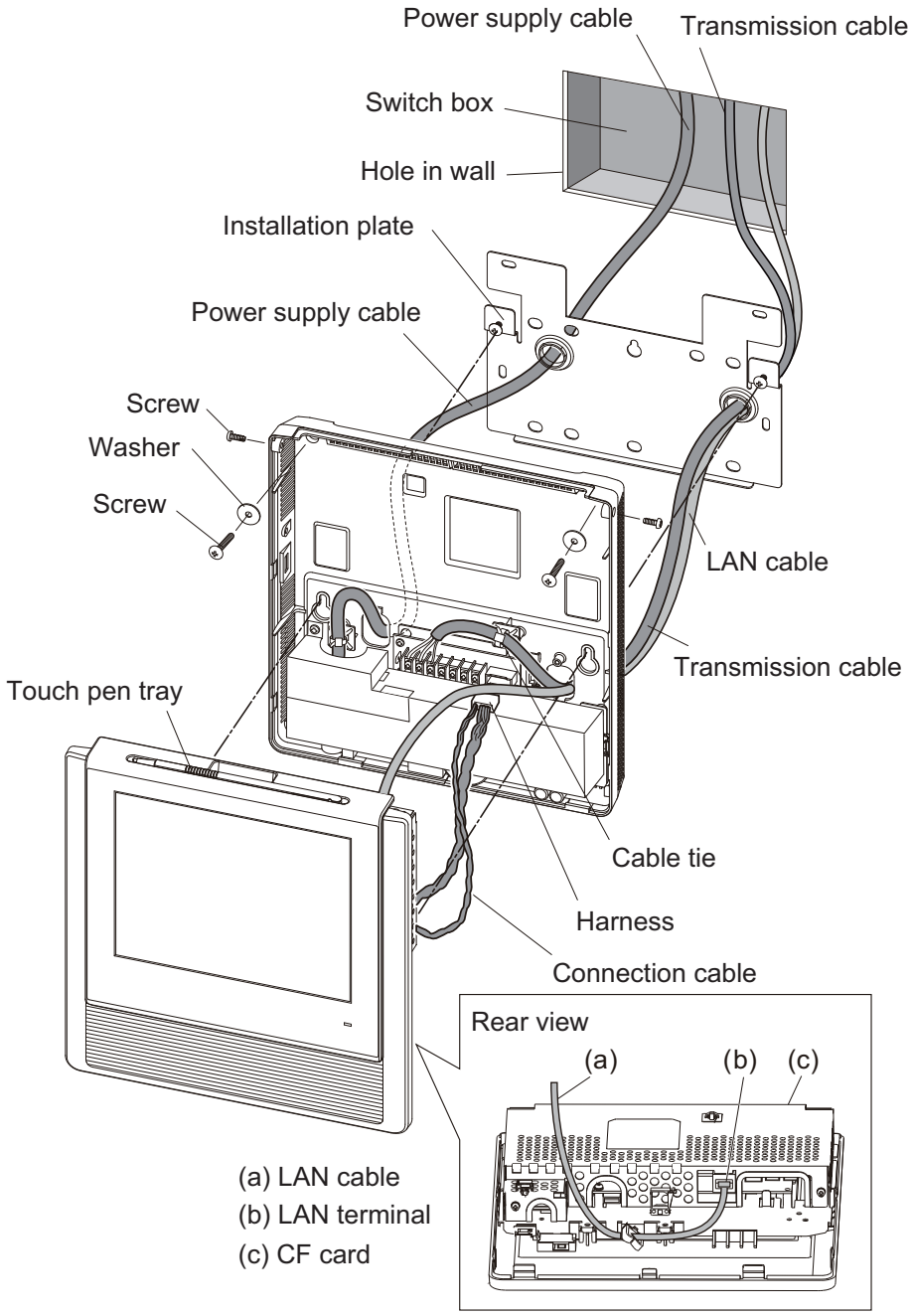

⚠ CAUTION

In advance, install a switch box to the wall where Touch panel controller is to be installed.

CONTROL SYSTEM

■ Specifications

Power source voltage	V	1 Ø AC 100—240
Power source frequency	Hz	50/60
Input power	W	22
Display		7.5-inch TFT color LCD (640 × 480 pixels), with touch panel
LED indicator		Power LED (Green)
External interface		USB 2.0
		Transmission line
		Ethernet port (Ethernet port is required for remote connection using Internet.)
		External input: Either emergency stop, batch operation/stop, electricity meter (Either Dry contact or apply voltage can be selected.)
		External output: Operation state, error state
		Reset switch
Usage temperature range	°C	0 to 40
Usage humidity range	%	0 to 85 (no condensation)
Storage temperature range	°C	-20 to 70
Storage humidity range	%	0 to 85 (no condensation)
Dimensions (H × W × D)	mm	260 × 246 × 54
Weight	g	2,150
Fuse capacity	A	5

● Wiring specifications

Use	Cable size	Wire type	Remarks
Power supply cable	0.5—1.25 mm^2	60245 IEC 57 or equivalent	1 Ø AC 100—240 V 50/60 Hz, 2-wire + ground (Always ground the unit)
Transmission cable	0.33 mm^2 (22 AWG)	LEVEL4 (NEMA) non-polar 2-core, twisted pair solid core shielded	LonWorks compatible cable
External input/output cable	0.33 mm^2 (22 AWG)	Polar 2-core, twisted pair	Use cable in accordance with local rules for cable.

■ Other required devices (Locally purchased)

- Personal computer that satisfies the following system requirements

Personal computer system requirement	
CPU	2 GHz or higher
Memory	2 GB or more
HDD	10 GB or more of free space
Display	1,366 × 768 or higher resolution
Interface	• USB port • Ethernet port (Ethernet port is required for remote connection using Internet.)
Software	• Microsoft Office Excel (2007, 2010, 2013, 2016), Microsoft Excel (2007, 2010, 2013) • Adobe Reader 10.0 or later • Internet Explorer 11

CONTROL SYSTEM

2-4. Central remote controller (UTY-DCG∗Z∗)

- Individual control and monitor of 100 indoor units
- 7-inch TFT color screen
- High visibility and easy operation
- External input/output contact
- Corresponds to 12 different languages. (English, Spanish, German, French, Italian, Russian, Portuguese, Turkish, Polish, Greek, Dutch, and Chinese)

■ Accessory

Name and shape	Q'ty	Application
Installation manual	1	
Operating manual	1	
Screw (M4 × 16 mm)	4	For installing
Cable tie	4	For binding power supply cable and transmission cable

CONTROL SYSTEM

■ Overview

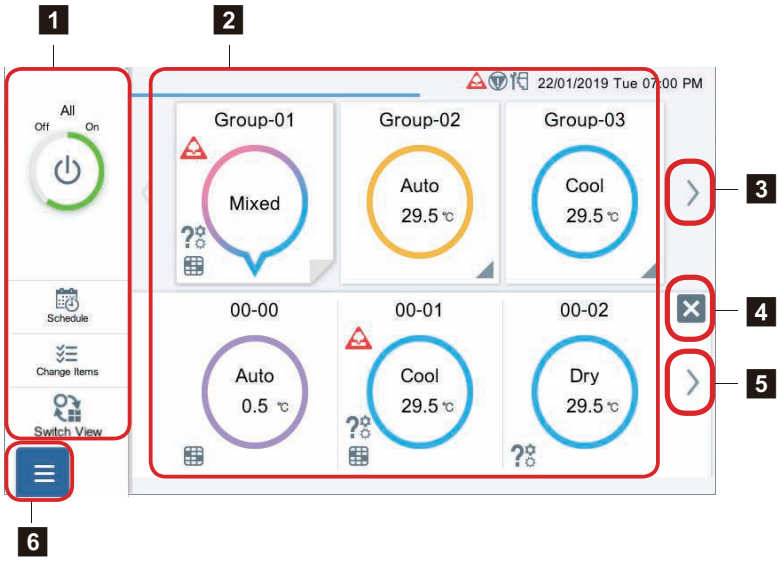

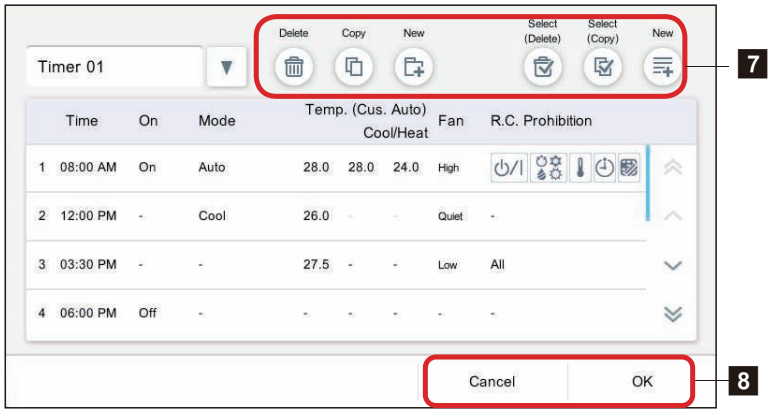

1 Left menu (Always display)

2 Group or R.C.G. button

3 Group scroll button

4 Group expansion cancel button

5 R.C.G. scroll button

6 Menu button

7 Icon

- Delete
  Deletes the currently displayed setting.
- Copy
  Copies the currently displayed setting.
- New
  Adds the new timer. However, when the number of settings reaches the upper limit, this button is disabled.
- Select (Delete)
  Deletes the selected line.
- Select (Copy)
  Copies the selected line.
- New
  Adds the new line. However, when the number of setting reaches upper limit, this button is disabled.

8 Button

- OK button
  Continues the appropriate process.
- Cancel button
  Cancels the process and closes the current screen.
- Reset button
  Returns the changed item to initial value.
- Close button
  Closes the current screen.
- End button
  Ends the process and closes the pop-up screen.

■ Main functions and screen examples

- **Individual control**
  On/Off, Mode, Set temp., Fan speed, Airflow direction, Anti freeze, Economy, and Human sensor.

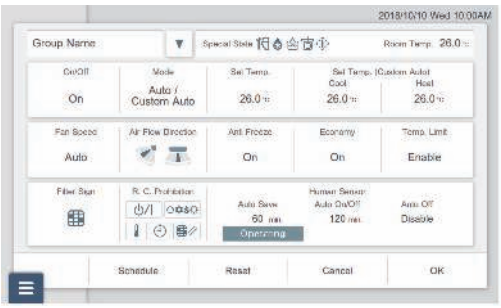

- **Vertical and Horizontal airflow direction setting**
  Vertical airflow direction, Horizontal airflow direction, and Individual airflow direction.

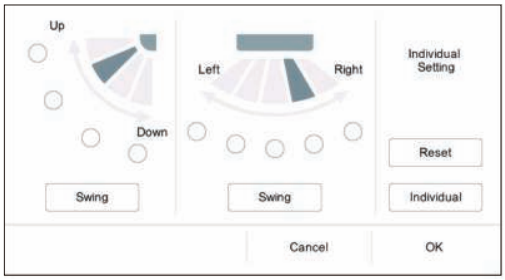

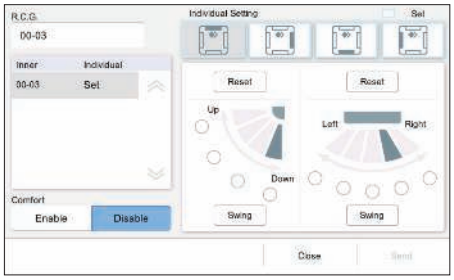

- **Room temperature upper and lower limitation setting**

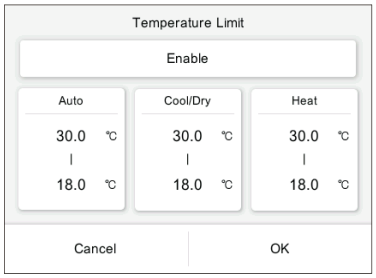

- **Remote controller prohibition**
  All, On/Off, Mode, Temp., Timer, and Filter.
  R.C prohibition setting prohibits individual remote control operation.

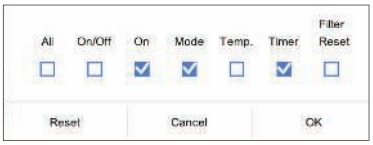

- **Schedule setting timer**

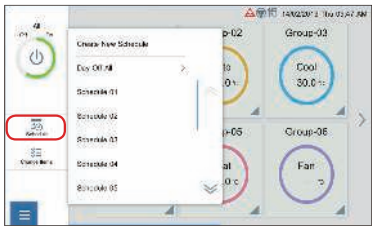

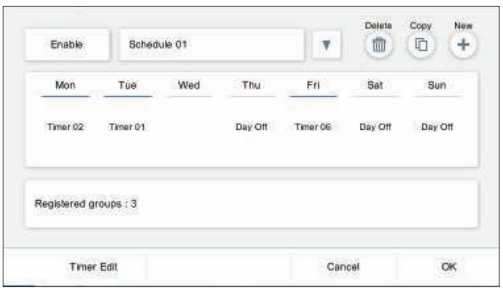

CONTROL SYSTEM

- **Error history**
  - Able to memorize max. 200 errors.
  - Suitable maintenance is possible by analysis of the error history data.

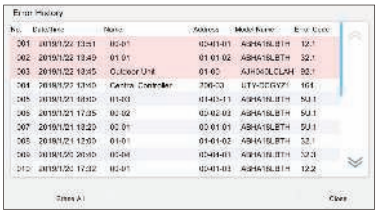

■ Dimensions

Unit: mm

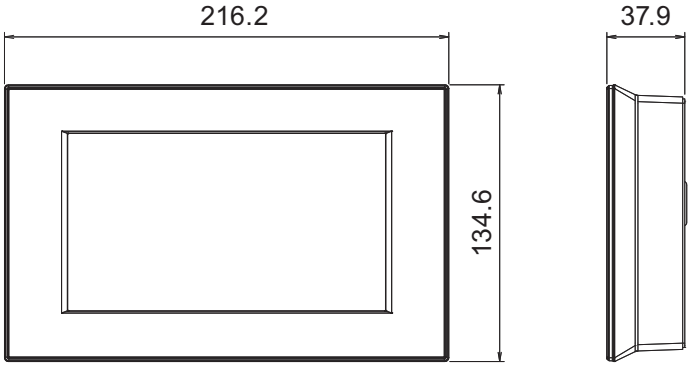

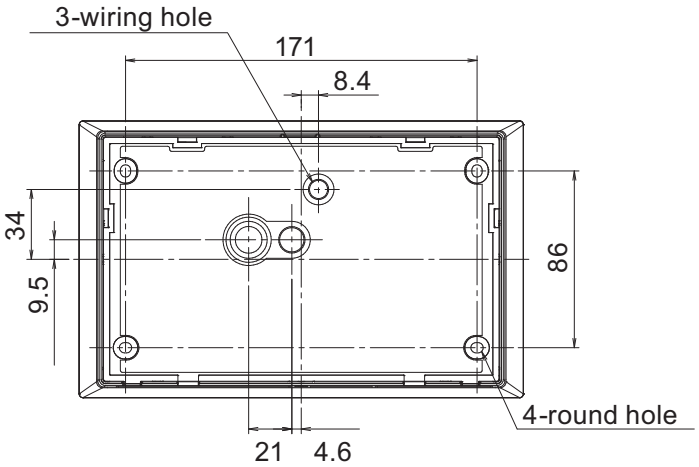

CONTROL SYSTEM

■ Terminal names

Transmission line terminal name

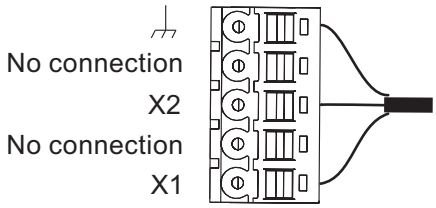

Power supply line terminal name

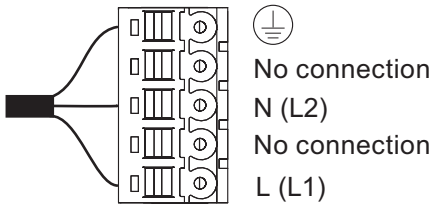

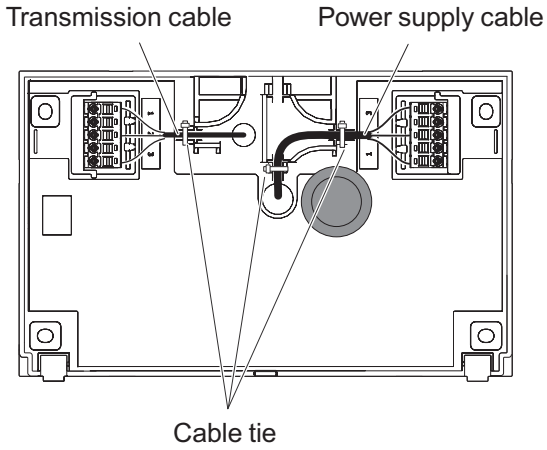

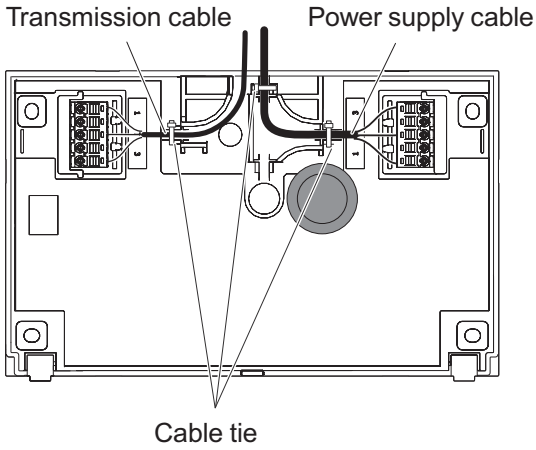

■ Installation space

Make a service space to perform installation work.

Unit: mm

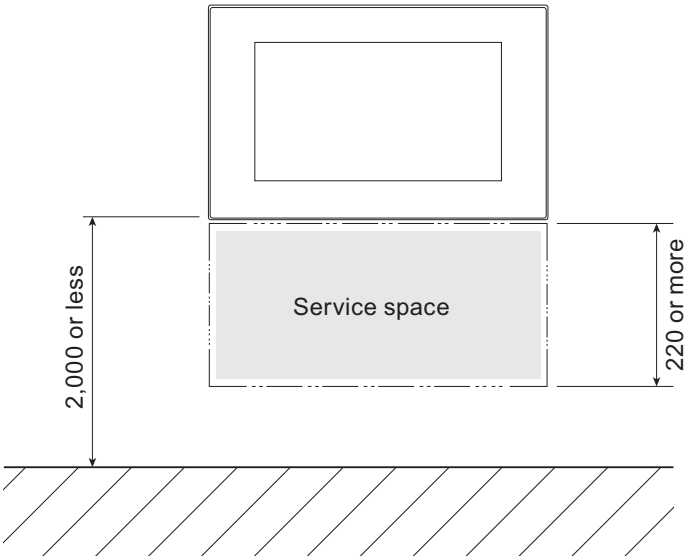

CONTROL SYSTEM

■ Installation

1. Separate the rear case from the front case.

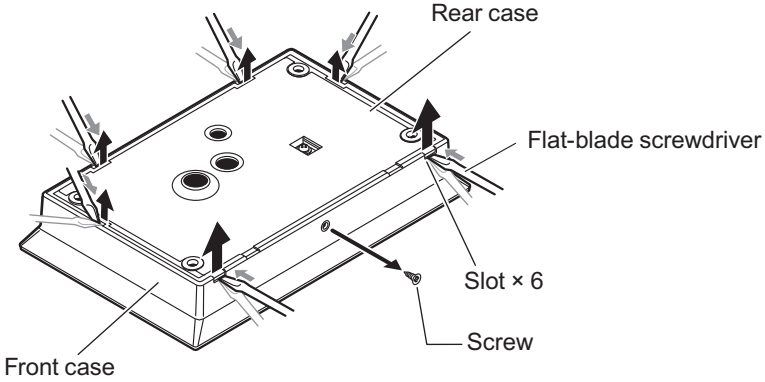

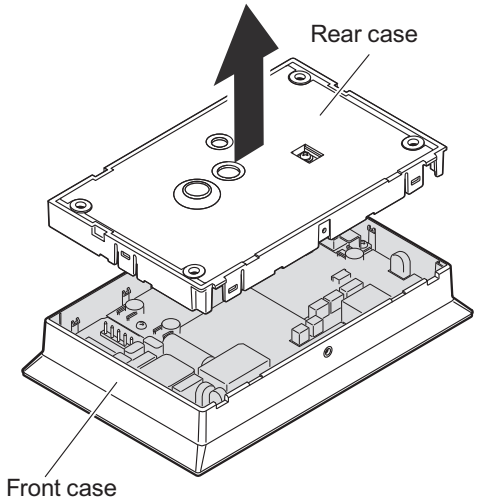

CONTROL SYSTEM

2. Install the rear case.
   - When cable is in the wall:

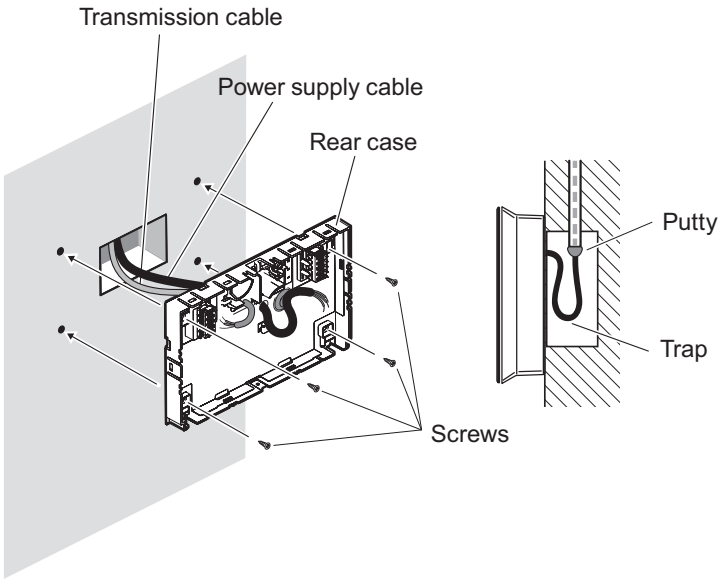

   - When cable is in the wall (switch box is used):

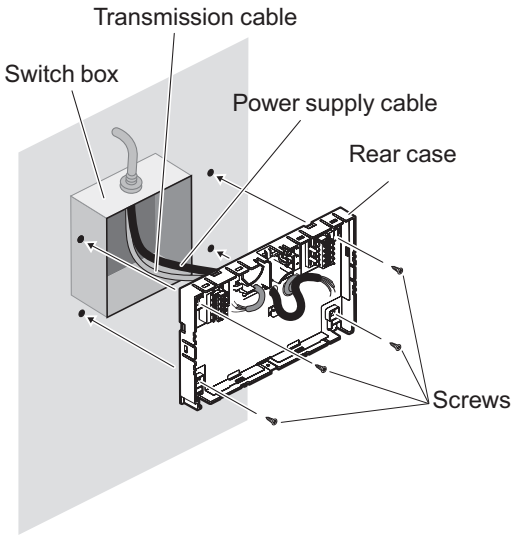

   - When cable is along the wall:

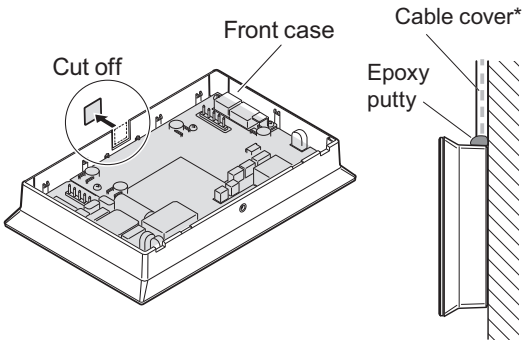

*: More than 1 mm thick

NOTES:

- When central remote controller (UTY-DCG∗Z∗) is installed at the wall directly, install at a flat wall so that small animals do not enter from the rear side.
- When central remote controller (UTY-DCG∗Z∗) is installed at the wall directly, remove the rubber bush at the rear side.

CONTROL SYSTEM

3. Install the front case to the rear case.

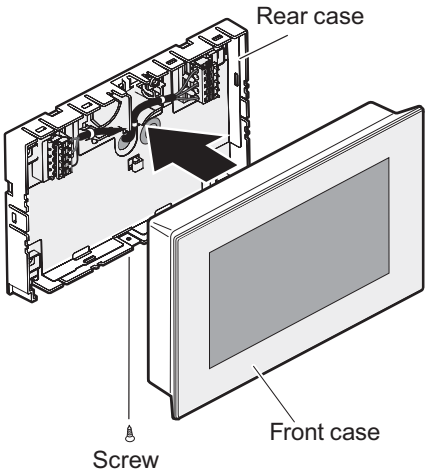

NOTE: For details, refer to the installation manual of the central remote controller.

CONTROL SYSTEM

■ Specifications

Power source voltage	V	1 Ø AC 100—240
Power source frequency	Hz	50/60
Input power	W	7
Display		7.0-inch TFT color LCD panel (WVGA)
LED indicator		Power LED (Green)
External interface		Transmission line
		External input: Either emergency stop, batch operation/stop, electricity meter (Either Dry contact or apply voltage can be selected.)
		External output: Operation state, error state
		Wired LAN (100 BASE-TX)
Usage temperature range	°C	0 to 40
Usage humidity range	%	0 to 85 (no condensation)
Storage temperature range	°C	-20 to 70
Storage humidity range	%	0 to 85 (no condensation)
Dimensions (H × W × D)	mm	134.6 × 216.2 × 37.9
Weight	g	800
Fuse capacity	A	5

● Wiring specifications

Use	Cable size	Wire type	Remarks
Power supply cable (for stranded wire)	0.8—1.25 mm^2 (18—16 AWG)	60245 IEC 57 or equivalent	1 Ø AC 100—240 V 50/60 Hz, 2-wire + ground (Always ground the unit)
Power supply cable (for solid wire)	0.8—2.0 mm^2 (18—14 AWG)	—	1 Ø AC 100—240 V 50/60 Hz, 2-wire + ground (Always ground the unit)
Transmission cable	0.33 mm^2 (22 AWG)	LEVEL4 (NEMA) non-polar 2-core, twisted pair solid core diameter 0.65 mm, shielded type	LonWorks compatible cable
External input/output cable	0.33 mm^2 (22 AWG)	Polar 2-core, twisted pair Max cable length: 25 m	Use cable in accordance with local rules for cable.
LAN cable	—	Category 5 or more straight cable	100 BASE-TX support

CONTROL SYSTEM

2-5. Group remote controller (UTY-CGG∗)

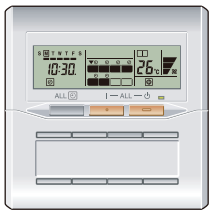

- Control and monitoring of up to 8 remote controller group is possible with one group remote controller.
- The optional Network converter (UTY-VGGXZ1) allows up to 4 Group remote controllers to be incorporated within the control layout. This flexibility is ideal for a number of different building sizes, types, and applications.
- Up to 64 Group remote controllers (with 16 Network converters UTY-VGGXZ1) can be connected in one VRF network system.
- Start/Stop, operation mode, set temperature, timer control, and fan speed can be controlled/monitored centrally or individually.
- Easy installation with a slim shape with no bulge in the back
- One-touch start/stop operation of each indoor unit is possible. All indoor units can also be easily operated by pressing an All ON, ALL OFF, or ALL TIMER ON/OFF button.

■ Accessory

Name and shape	Q'ty	Application
Label	4	For writing the names of the indoor units that have been registered
Screw	2	For installing the remote controller
Cable tie	1	For remote controller and remote controller cable binding
Installation manual	1	
Operation manual	1	

CONTROL SYSTEM

■ Overview

1 Timer setting at all the connected indoor units is possible by centralized timer on the front panel.

2 All the connected indoor units can be turned on / off simultaneously by centralized ON/OFF button on the front of the cover.

3 The indoor unit can be quickly turned on and off by ON / OFF button of each indoor unit on the front of the door.

With cover closed

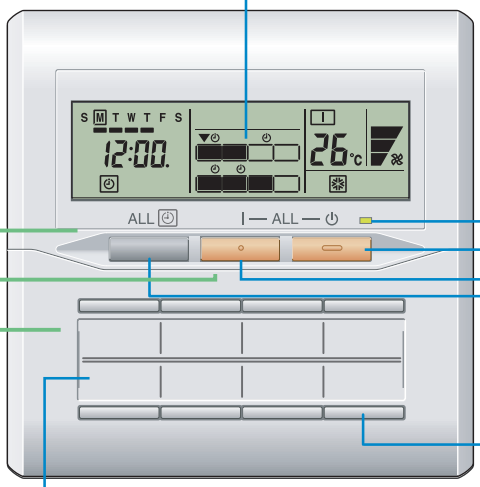

Indoor Unit Operation Indicators

Timer setting at all the connected indoor units is possible by centralized timer on the front panel.

■ : On □ : Off
● : Timer operation ▼ : Selection

Operation Lamp

This is on if any of the indoor units is operating. This flashes if any of the indoor units has malfunction(s).

ALL OFF Button

Press the ALL OFF button to turn off all of the indoor units.

ALL ON Button

Press the ALL ON button to turn on all of the indoor units.

ALL TIMER Button

Press the ALL TIMER button to turn the timer operation on or off for all indoor units.

Start / Stop Button

Press the ON / OFF button to turn the corresponding indoor unit on or off.

Indoor Unit Name Labels

Write the names of the indoor units on the included labels and attach them.

Timer and Clock Display and setting

- Setting Indicator
- Day Indicator
- Timer and Clock Indicator
- Timer Mode Indicator
- Timer Mode (DELETE) Button
- DAY Button
- Set Time Button
- PROGRAM (CLOCK ADJUST) Button
- ENTER Button

With cover open

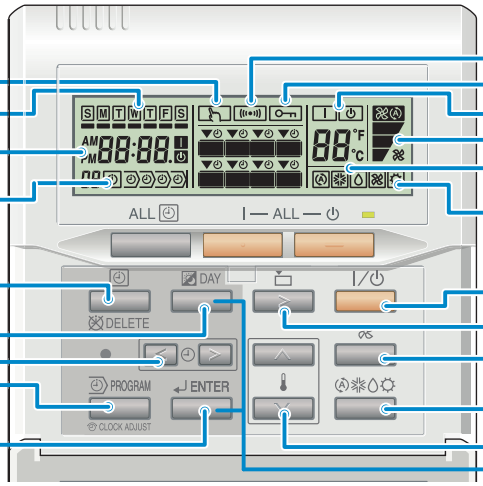

Displaying the Status and Controlling indoor units

- Transmission Indicator
- Operation Lock Indicator
- ON / OFF Indicator
- Fan Speed Indicator
- Set Temperature Indicator
- Operation Mode Indicator
- Start / Stop Button
- Select Button
- Fan Control Button
- Operation Mode Button *1, *2, *3
- Set Temperature Button
- Child Lock Function

*1: "AUTO Ⓐ" is not available for a heat pump model unless it is set up as an administrative indoor unit.

*2: "FAN ✻" is not available for a heat pump model.

*3: "HEAT ☼" is not available for a cooling only model.

CONTROL SYSTEM

CONTROL SYSTEM

■ System diagrams

- **When one group remote controller is connected:**

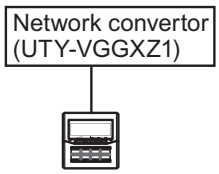

- **When multiple group remote controllers are connected:**

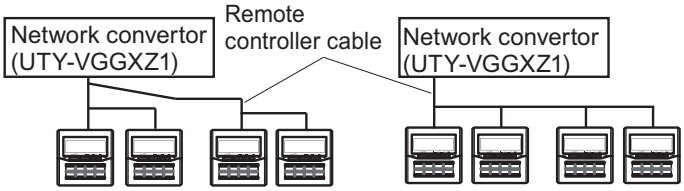

NOTES:

- Total remote controller cable length: Max. 100 m
- Connectable group remote controller: Max. 4 units/convertor
- Use of a terminal box is recommended when a junction is made in the wiring.

■ Electrical wiring

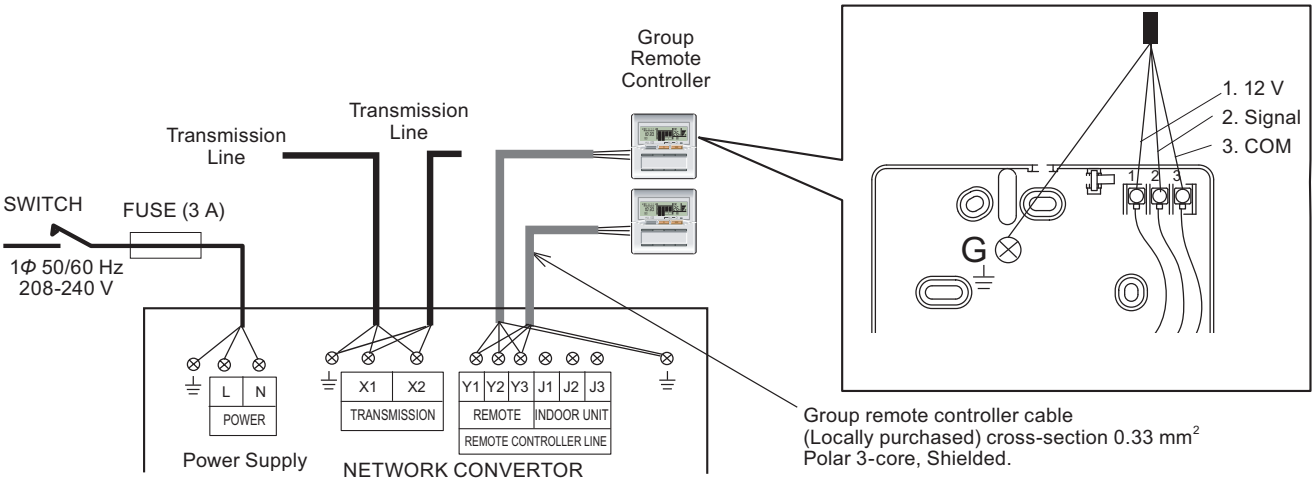

■ Dimensions

Unit: mm

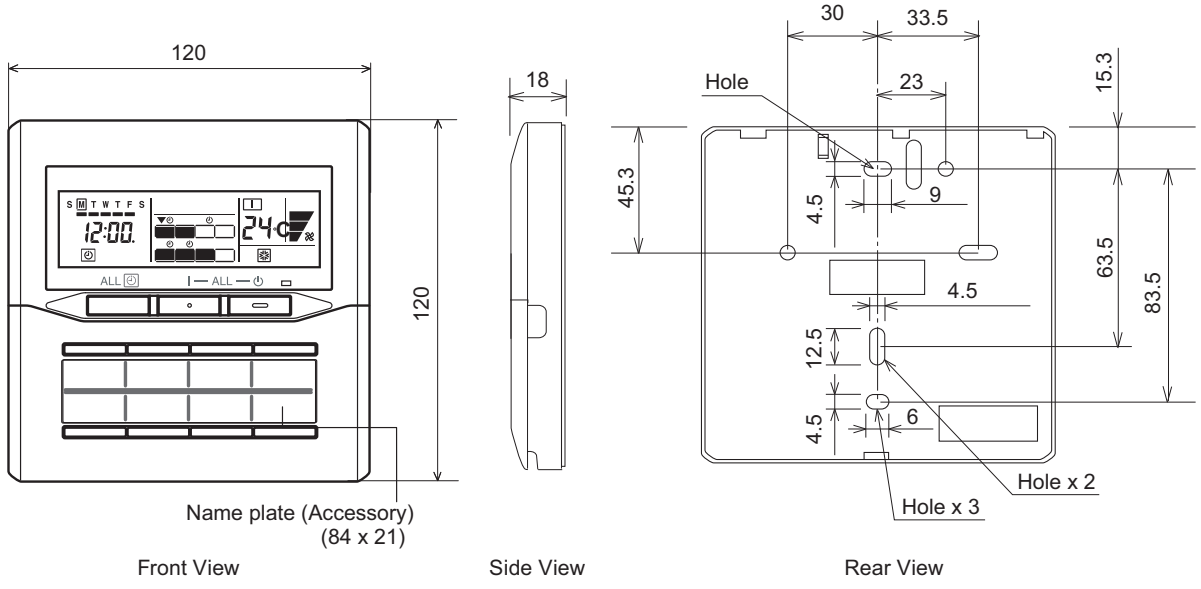

CONTROL SYSTEM

■ Specifications

Dimensions (H × W × D)	mm	120 × 120 × 18
Weight	g	200

● Wiring specifications

Use	Cable size	Wire type	Remarks
Remote controller cable	0.33 mm^2 (22 AWG)	Polar 3-core	Use sheathed PVC cable or shielded cable in accordance with regional cable standard.

CONTROL SYSTEM

2-6. Wired remote controller (Touch panel: UTY-RNR∗Z∗)

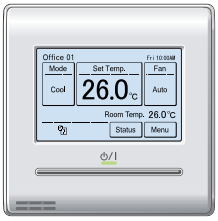

- Easy finger touch operation with LCD panel.
- Built-in Weekly/Daily time (On/Off, Temp., Mode)
- The backlit LCD enables easy operation in a dark room.
- Room temperature display
- Control up to 16 indoor units
- Corresponds to 12 different languages (English, Chinese*, French, German, Spanish, Russian, Polish, Italian, Portuguese, Greek*, Turkish, and Dutch*)

*: Following languages are not available for version 5 or later:

- Chinese
- Greek and Dutch (North America only)

■ Accessory

Name and shape	Q'ty	Application
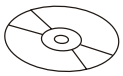 CD-ROM	1	
Screw	2	For installing the remote controller
Cable tie	1	For remote controller and remote controller cable binding
Installation manual	1	
Operation manual	1	

CONTROL SYSTEM

■ Overview

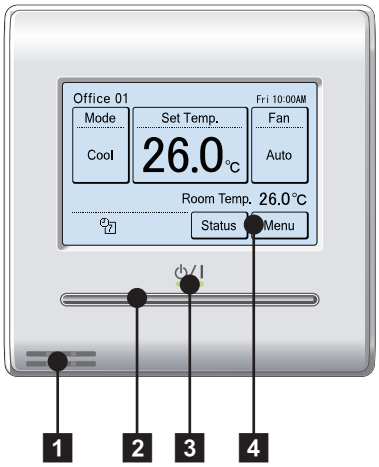

Display panel

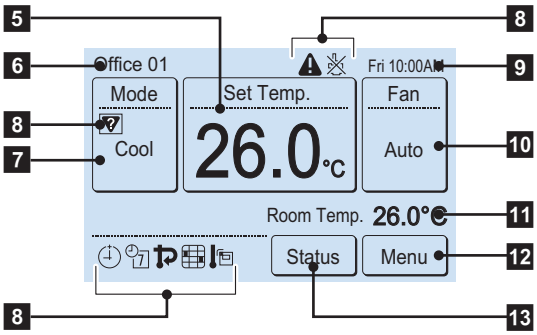

1 Remote temperature sensor (inside)

2 On/off button

Operable only while displaying the “Monitor mode” screen.

3 LED lamp (operation indicator)

4 Touch panel display

5 Set temperature

Operating temperature can be set.

6 Remote controller group name

7 Mode

Operation mode can be set.

8 Status icons

9 Clock

10 Fan

Fan speed can be set.

11 Room temperature

12 Menu

Various settings can be set.

13 Status

Status of the indoor unit and error can be checked.

NOTE: Functions may differ by type of the indoor unit. For details, refer to the operation manual.

CONTROL SYSTEM

■ System diagrams

- **Multiple remote control**
  Up to 4 remote controllers can be used to operate the indoor units.

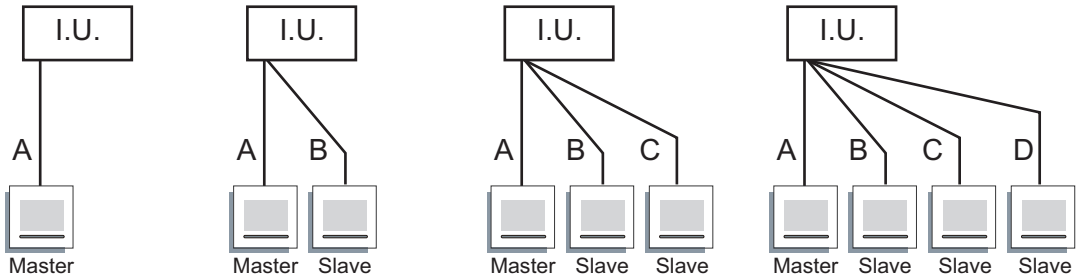

A, B, C, D: Remote controller cable (For details of controller cable specifications, refer to "Controller cable" in Chapter 6. SYSTEM DESIGN on page 06-66.)

A ≤ 500 m, A + B ≤ 500 m, A + B + C ≤ 500 m, A + B + C + D ≤ 500 m

NOTE: Multiple installation method described above is prohibited to combine with 3-wired type remote controller (UTY-RNK∗, UTY-RSK∗, or UTY-RHK∗) and 2-wired type remote controller (UTY-RNR∗, UTY-RNR∗Z∗, or UTY-RLR∗)

- **Group control**
  With a single remote controller, up to 16 indoor units can be simultaneously operated.

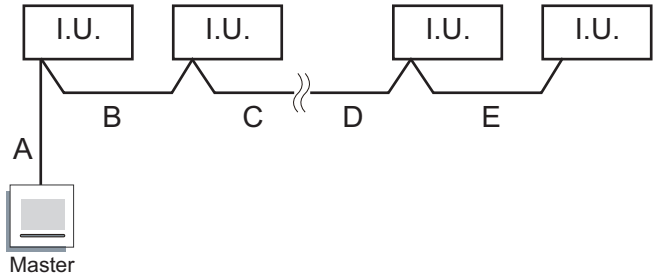

A, B, C, D, E: Remote controller cable (For details of controller cable specifications, refer to "Controller cable" in Chapter 6. SYSTEM DESIGN on page 06-66.)

A + B + C + D + E ≤ 500 m

CONTROL SYSTEM

■ Electrical wiring

1 remote controller:

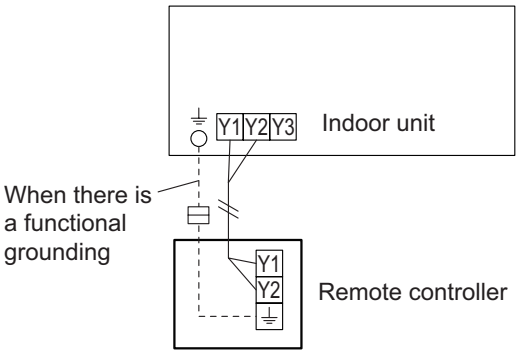

2 remote controllers:

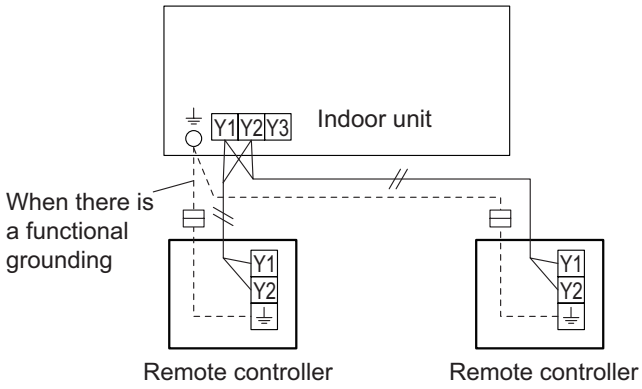

Group control:

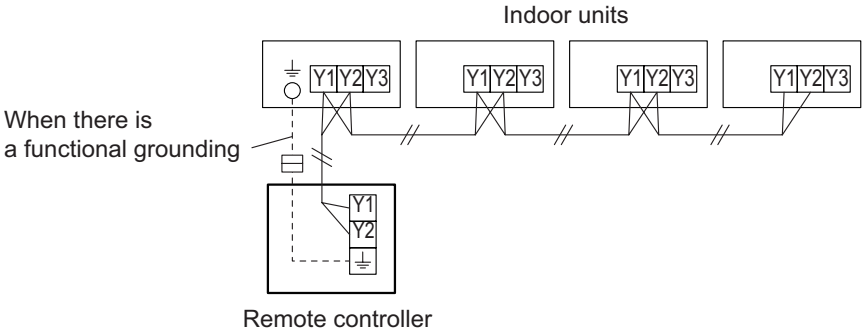

■ Dimensions

Unit: mm

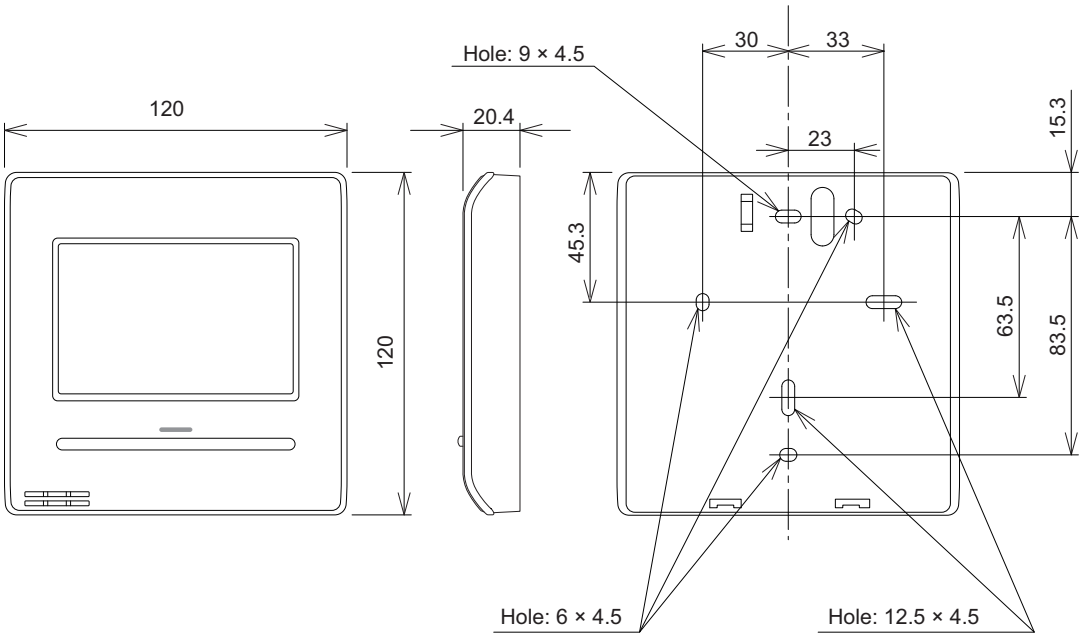

CONTROL SYSTEM

■ Installation space

- This product cannot be installed in wall.
- Recommendation installation height of the remote controller is from the floor surface to the bottom of the remote controller.
- Even when you install a remote controller to one of a switch box and the surface of a wall, secure the space shown in following figure. If spaces run short, it will become difficult to remove a remote controller.

Unit: mm

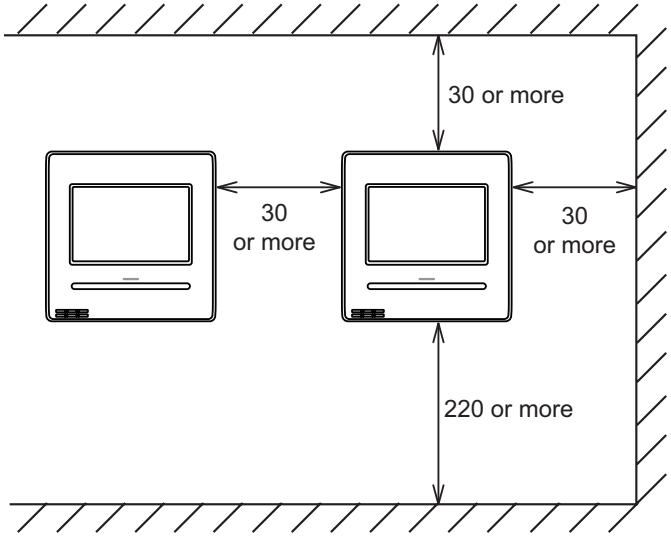

Secure enough space where a flat-blade screwdriver to take off a case can be inserted.

■ Installation

- **Connection pattern**

NOTE: Connection pattern is different according to type of Indoor unit.

Indoor unit type	Connection pattern
All cassette type	Pattern A
All duct type	Pattern A
All floor type	Pattern A
Floor/Ceiling type	Pattern A
All ceiling type	Pattern A
All wall mounted type	Pattern B

- **Pattern A**
  1. Connect the end of remote controller cable directly to the exclusive terminal block.
  2. Set the DIP switch (SW1) to “2WIRE” on the PCB of the indoor unit.

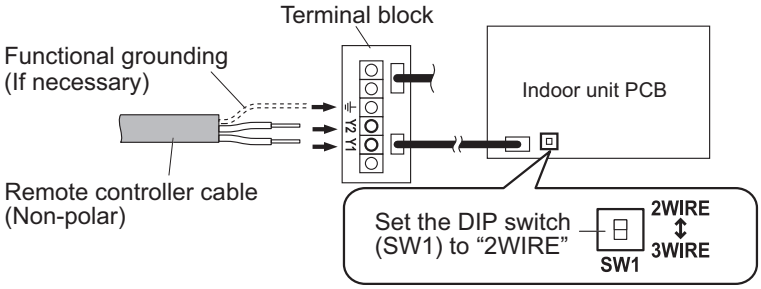

NOTES:
- Layout of terminal block and PCB is varies depending on the type of indoor unit.
- Operation may fail if it is connected to the outdoor unit or the terminal block for power supply.

- **Pattern B**
  1. Use a tool to cut off the terminal on the end of the remote controller cable, and then remove the insulation from the cut end of the cable as shown below.

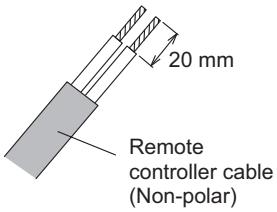

  2. Connect the remote controller cable and connecting cable as shown below. Be sure to insulate the connection between the cables.

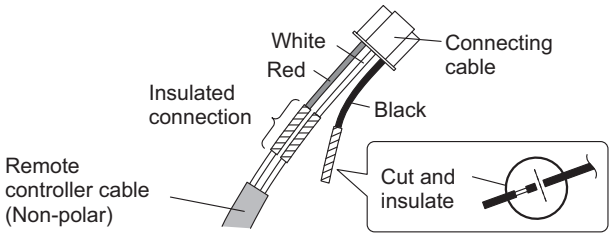

  3. Connect the remote controller cable to the connecting cable, and insert it to the connector. Set the DIP switch (SW1) to “2WIRE” on the PCB of the indoor unit.

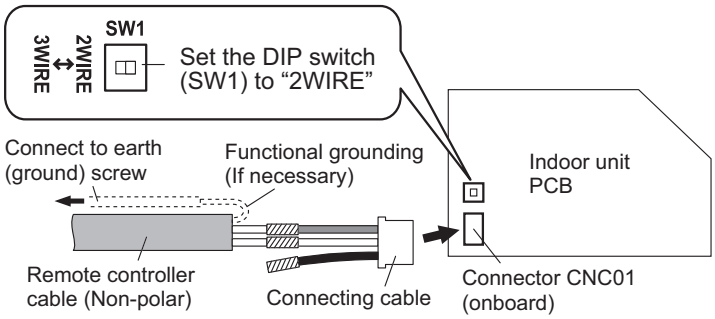

NOTE: Layout of terminal block and PCB is varies depending on the type of indoor unit.

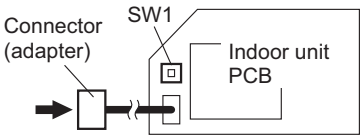

CONTROL SYSTEM

■ Specifications

Input voltage	V	DC 12
Power consumption	W	Max. 0.3
Display		3.8-inch FSTN LCD (255 × 160 dots) with touch panel
Usage temperature range	°C	0 to 40
Usage humidity range	%	20 to 90 (no condensation)
Storage temperature range	°C	-10 to 60
Storage humidity range	%	20 to 90 (no condensation)
Dimensions (H × W × D)	mm	120 × 120 × 20.4
Weight	g	220

● Wiring specifications

Use	Cable size	Wire type	Remarks
Remote controller cable	0.33 to 1.25 mm^2 (22 to 16 AWG)	Non polar 2-core	Use sheathed twist pair cable.*

*: Use shielded cable (locally purchased) in accordance with the regional cable standard.

CONTROL SYSTEM

2-7. Wired remote controller (UTY-RLR∗)

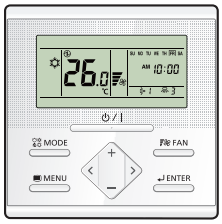

- Various time setup available (ON/OFF/WEEKLY)
- Equipped with weekly timer as standard function (Start/Stop function is twice per day for a week.)
- When setting up a time, start/stop, and the temperature setup can be changed.
- When a failure occurs, the error code is displayed.
- Error history (Last 16 error code can be accessed.)
- Up to 16 indoor units can be simultaneously controlled.
- The room temperature can be controlled by detecting the temperature accurately with built-in thermo sensor.

■ Accessory

Name and shape	Q'ty	Application
CD-ROM	1	
Screw	2	For installing the remote controller
Cable tie	1	For remote controller and remote controller cable binding
Installation manual	1	
Operation manual	1	

CONTROL SYSTEM

■ Overview

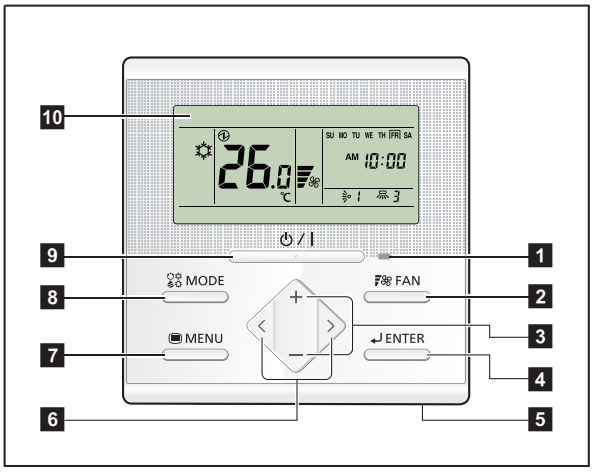

Display panel

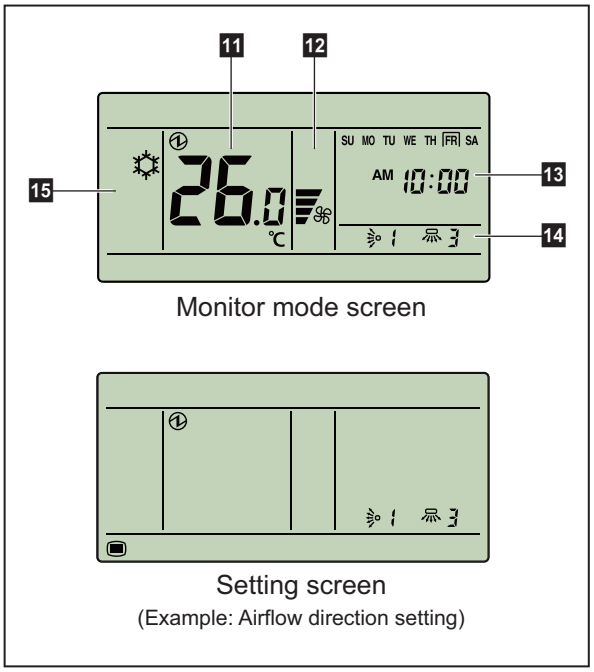

Monitor mode screen

Setting screen
(Example: Airflow direction setting)

NOTE: For individual icons in Setting screen and related functions, refer to the operation manual.

1 LED lamp (Operation indicator)

Lights while the indoor unit is operating. Blinks when an error occurred.

2 FAN button

Each time the button is pressed, fan speed switches as follows:

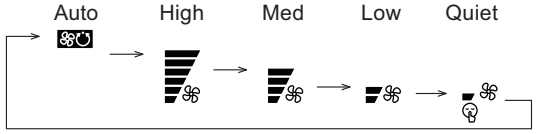

3 +, - buttons (Set temperature buttons)

Used to adjust temperature in Monitor mode screen.
+ button: Raise
- button: Lower
In Setting screen, used to select the setting items.
NOTE: When the operation mode is set to FAN, the temperature cannot be adjusted.

4 ENTER button

Used to enter setting items and settings.

5 Room temperature sensor (inside)

Senses ambient temperature of unit.

6 <, > buttons

Used to select setting items during the setting item selection screen is displayed.

7 MENU button

Used to display the setting item selection screen.

8 MODE button

Each time the button is pressed, operation mode switches as follows:

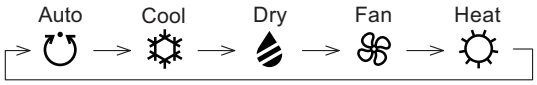

9 On/Off button

Starts or stops the operation.
NOTE: On/Off button cannot be operated at screens other than the Monitor mode screen.

10 Display panel

Displays Monitor mode screen or Setting screen.
Monitor mode screen is home screen of this controller, and the basic operation is performed in this screen.
In Setting screen, several settings are adjustable.

11 Temperature indicator

12 Fan speed indicator

13 Clock indicator

14 Airflow direction indicator

15 Operation mode indicator

CONTROL SYSTEM

■ System diagrams

- **Multiple remote control**
  Up to 4 remote controllers can be used to operate the indoor units.

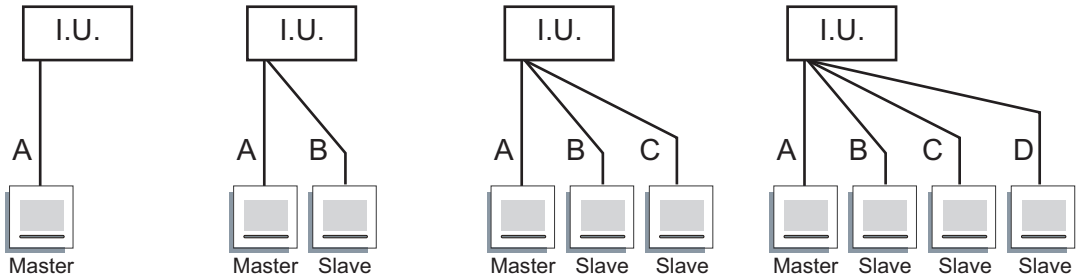

A, B, C, D: Remote controller cable (For details of controller cable specifications, refer to "Controller cable" in Chapter 6. SYSTEM DESIGN on page 06-66.)

A ≤ 500 m, A + B ≤ 500 m, A + B + C ≤ 500 m, A + B + C + D ≤ 500 m

NOTE: Multiple installation method described above is prohibited to combine with 3-wired type remote controller (UTY-RNK∗, UTY-RSK∗, or UTY-RHK∗) and 2-wired type remote controller (UTY-RNR∗, UTY-RNR∗Z∗, or UTY-RLR∗)

- **Group control**
  With a single remote controller, up to 16 indoor units can be simultaneously operated.

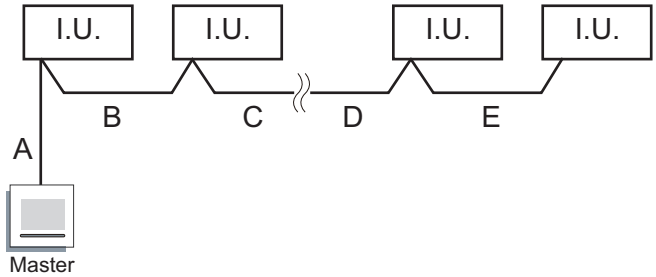

A, B, C, D, E: Remote controller cable (For details of controller cable specifications, refer to "Controller cable" in Chapter 6. SYSTEM DESIGN on page 06-66.)

A + B + C + D + E ≤ 500 m

CONTROL SYSTEM

■ Electrical wiring

1 remote controller:

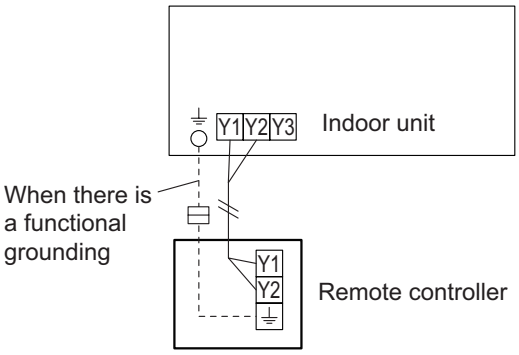

2 remote controllers:

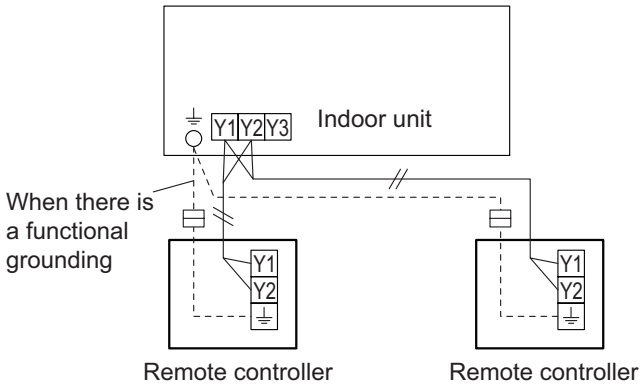

Group control:

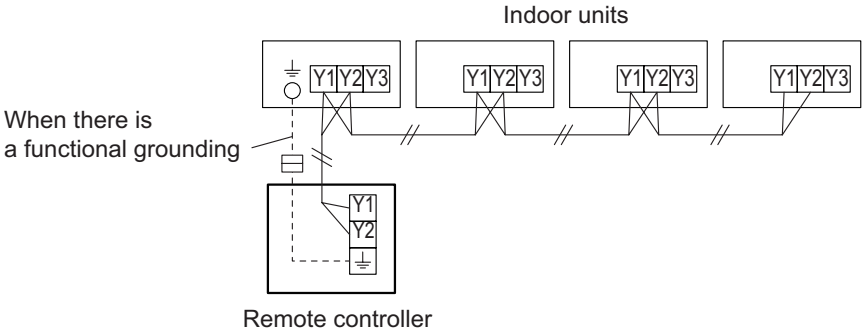

CONTROL SYSTEM

■ Dimensions

Unit: mm

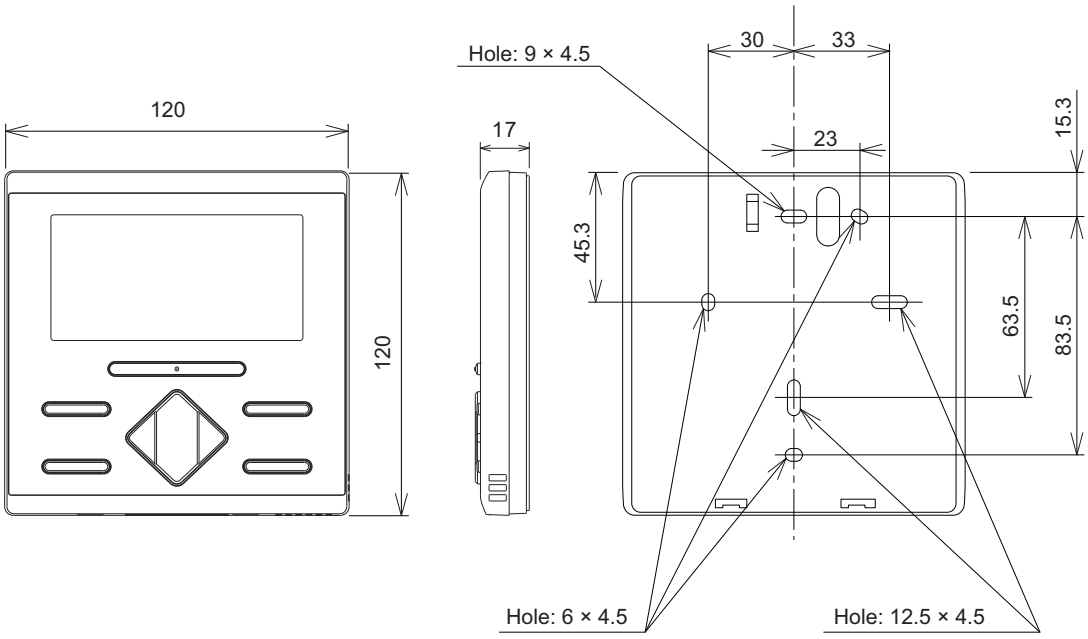

CONTROL SYSTEM

■ Installation

- **Connection pattern**

NOTE: Connection pattern is different according to type of Indoor unit.

Indoor unit type	Connection pattern
All cassette type	Pattern A
All duct type	Pattern A
All floor type	Pattern A
Floor/Ceiling type	Pattern A
All ceiling type	Pattern A
All wall mounted type	Pattern B

- **Pattern A**
  1. Connect the end of remote controller cable directly to the exclusive terminal block.
  2. Set the DIP switch (SW1) to “2WIRE” on the PCB of the indoor unit.

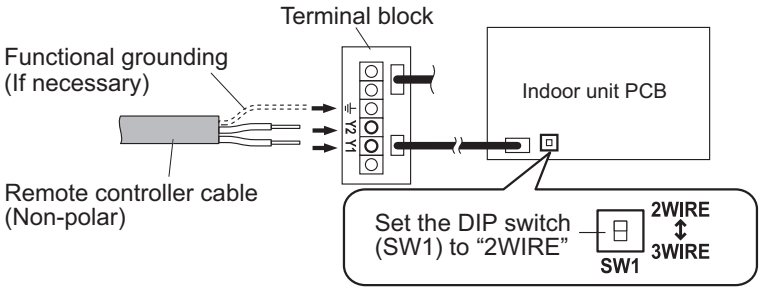

NOTES:
- Layout of terminal block and PCB is varies depending on the type of indoor unit.
- Operation may fail if it is connected to the outdoor unit or the terminal block for power supply.

CONTROL SYSTEM

- **Pattern B**
  1. Use a tool to cut off the terminal on the end of the remote controller cable, and then remove the insulation from the cut end of the cable as shown below.

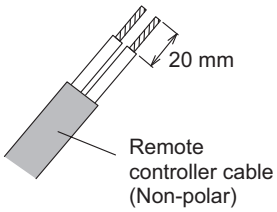

  2. Connect the remote controller cable and connecting cable as shown below. Be sure to insulate the connection between the cables.

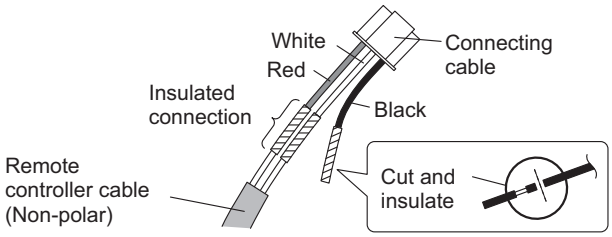

  3. Connect the remote controller cable to the connecting cable, and insert it to the connector. Set the DIP switch (SW1) to “2WIRE” on the PCB of the indoor unit.

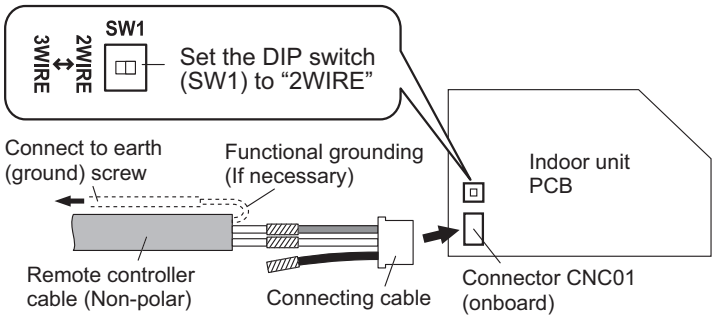

NOTE: Layout of terminal block and PCB is varies depending on the type of indoor unit.

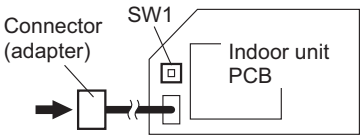

■ Specifications

Input voltage	V	DC 12
Power consumption	W	Max. 0.23
Usage temperature range	°C	0 to 46
Usage humidity range	%	0 to 90 (no condensation)
Storage temperature range	°C	-20 to 70
Storage humidity range	%	0 to 90 (no condensation)
Dimensions (H × W × D)	mm	120 × 120 × 17
Weight	g	170

● Wiring specifications

Use	Cable size	Wire type	Remarks
Remote controller cable	0.33 to 1.25 mm^2 (22 to 16 AWG)	Non polar 2-core	Use sheathed twist pair cable.*

*: Use shielded cable (locally purchased) in accordance with the regional cable standard.

CONTROL SYSTEM

2-8. Wired remote controller (UTY-RCR∗Z1)

- UTY-RCR∗Z1 is compatible with comfort airflow function for 3D flow cassette type.
- Various OFF timer setup are possible.
- When a failure occurs, the error code is displayed.
- The room temperature can be controlled by detecting the temperature accurately with built-in thermo sensor.
- Built-in IR receiver.

■ Accessory

Name and shape	Q'ty	Application
Screw	2	For installing the remote controller
Cable tie	1	For remote controller and remote controller cable binding
Installation manual	1	
Operation manual	1	

CONTROL SYSTEM

■ System diagrams

- **Single remote control**

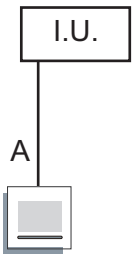

Remote controller cable (For details of controller cable specifications, refer to "Controller cable" in Chapter 6. SYSTEM DESIGN on page 06-66.)
A ≤ 500 m

■ Electrical wiring

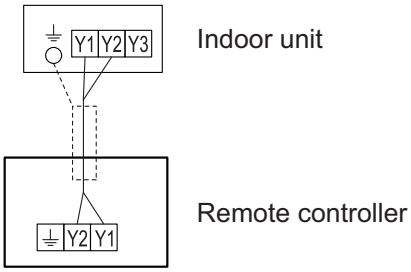

■ Dimensions

Unit: mm

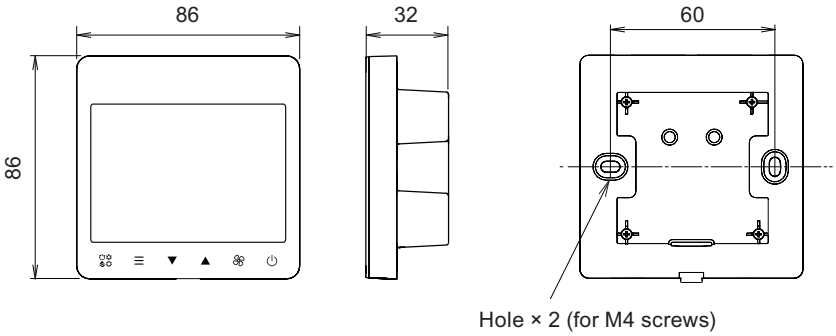

CONTROL SYSTEM

■ Installation

- **Connection pattern**

NOTE: Connection pattern is different according to type of Indoor unit.

Indoor unit type	Connection pattern
All cassette type	Pattern A
All duct type	Pattern A
All floor type	Pattern A
Floor/Ceiling type	Pattern A
All ceiling type	Pattern A
All wall mounted type	Pattern B

- **Pattern A**
  1. Connect the end of remote controller cable directly to the exclusive terminal block.
  2. Set the DIP switch (SW1) to “2WIRE” on the PCB of the indoor unit.

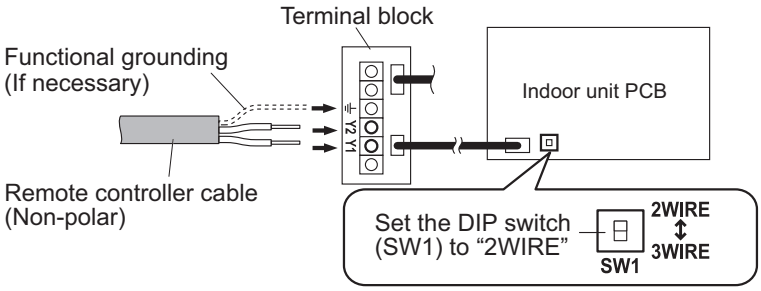

NOTES:
- Layout of terminal block and PCB is varies depending on the type of indoor unit.
- Operation may fail if it is connected to the outdoor unit or the terminal block for power supply.

CONTROL SYSTEM

- **Pattern B**
  1. Use a tool to cut off the terminal on the end of the remote controller cable, and then remove the insulation from the cut end of the cable as shown below.

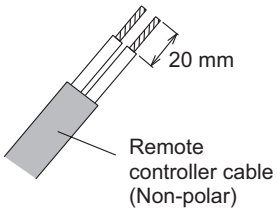

  2. Connect the remote controller cable and connecting cable as shown below. Be sure to insulate the connection between the cables.

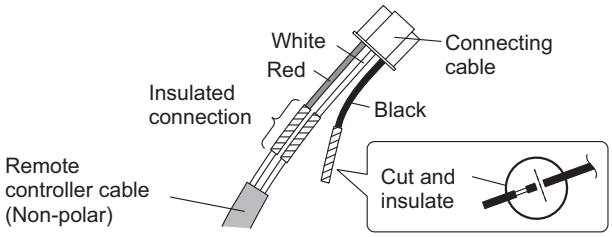

  3. Connect the remote controller cable to the connecting cable, and insert it to the connector. Set the DIP switch (SW1) to “2WIRE” on the PCB of the indoor unit.

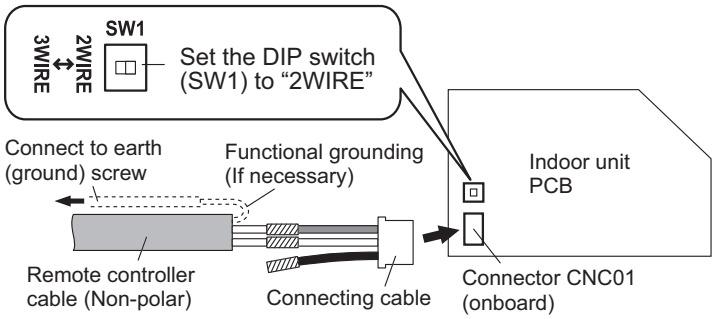

NOTE: Layout of terminal block and PCB is varies depending on the type of indoor unit.

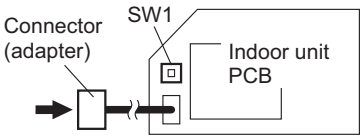

■ Specifications

Input voltage	V	DC 12
Power consumption	W	Maximum 0.6
Usage temperature range	°C	0 to 46
Usage humidity range	%	0 to 90 (no condensation)
Storage temperature range	°C	-20 to 70
Storage humidity range	%	0 to 90 (no condensation)
Dimensions (H × W × D)	mm	86 × 86 × 32
Weight	g	135

● Wiring specifications

Use	Cable size	Wire type	Remarks
Remote controller cable	0.33 to 1.25 mm^2 (22 to 16 AWG)	Non polar 2-core	Use sheathed twist pair cable.*

*: Use shielded cable (locally purchased) in accordance with the regional cable standard.

CONTROL SYSTEM

2-9. Wired remote controller (UTY-RNK∗)

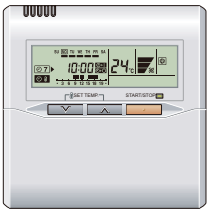

- Various time setup available (ON/OFF/WEEKLY)
- Equipped with weekly timer as standard function (Start/Stop function is twice per day for a week.)
- When setting up a time, start/stop, and the temperature setup can be changed.
- When a failure occurs, the error code is displayed.
- Error history (Last 16 error code can be accessed.)
- Up to 16 indoor units can be simultaneously controlled.
- The room temperature can be controlled by detecting the temperature accurately with built-in thermo sensor.

■ Accessory

Name and shape	Q'ty	Application
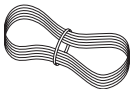 Remote controller cable	10 m	For connecting the remote controller
Screw	2	For installing the remote controller
Cable tie	1	For remote controller and remote controller cable binding
Installation manual	1	
Operation manual	1	

CONTROL SYSTEM

■ Overview

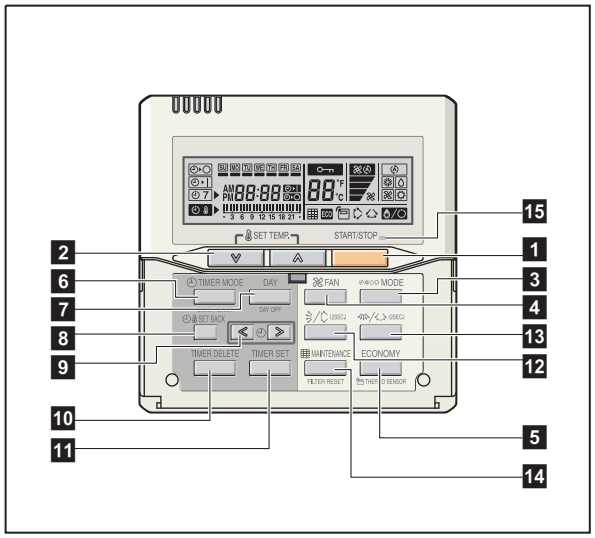

Display panel

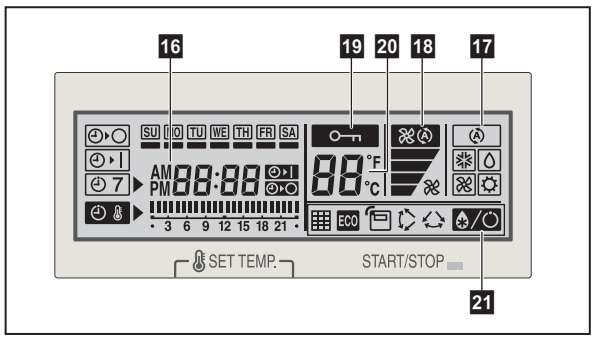

NOTE: Functions may differ by type of the indoor unit. For details, refer to the operation manual.

1 START/STOP button

Starts and stops operation.

2 SET TEMP. button

Selects the setting temperature.

3 MODE button

Selects the operating mode (AUTO, HEAT, FAN, COOL, and DRY).

4 FAN button

Selects the fan speed AUTO ,QUIET , LOW , MED , and HIGH).

5 ECONOMY (THERMO SENSOR) button

Turns the economy-efficient mode on and off.

6 TIMER MODE (CLOCK ADJUST) button

Selects the timer mode (off timer, on timer, and weekly timer). Sets the current time.

7 DAY (DAY OFF) button

Temporarily cancels one day timer.

8 SET BACK button

Selects the set back timer.

9 Set time button

Pressed to set time.

10 TIMER DELETE button

Deletes the weekly timer schedule.

11 TIMER SET button

Sets the date, hour, minute, and on-off time.

12 Vertical airflow direction and swing button

Push for 2 seconds to change the swing mode.

13 Horizontal airflow direction and swing button

Push for 2 seconds to change the swing mode.

14 FILTER RESET button

15 Operation lamp

Lights during operation and when the timer is on.

16 Timer and clock indicator

17 Operation mode indicator

18 Fan speed indicator

19 Operation lock indicator

20 Temperature indicator

21 Function indicators

- Defrost indicator
- Thermo sensor indicator
- Economy indicator
- Vertical swing indicator
- Horizontal swing indicator
- Filter indicator

CONTROL SYSTEM

CONTROL SYSTEM

■ System diagram

1 remote controller:

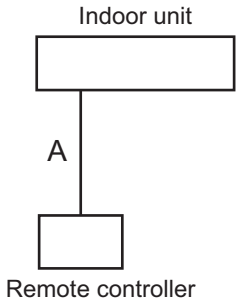

2 remote controllers:

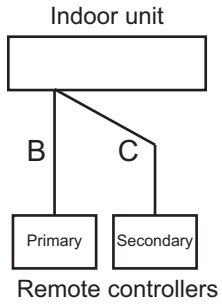

A, B, C: Remote controller cable
A ≤ 500 m;B + C ≤ 500 m

■ Electrical wiring

1 remote controller:

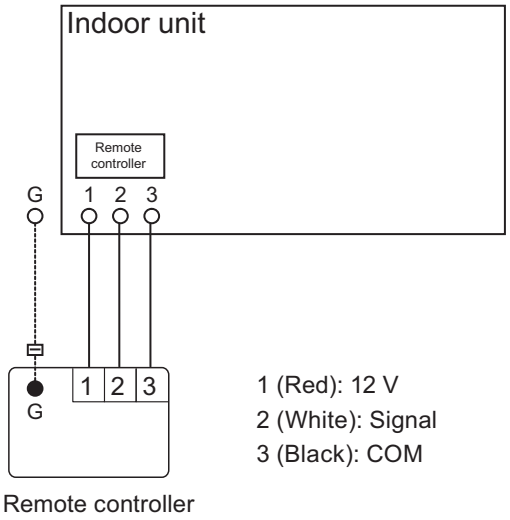

1 (Red): 12 V
2 (White): Signal
3 (Black): COM

2 remote controllers:

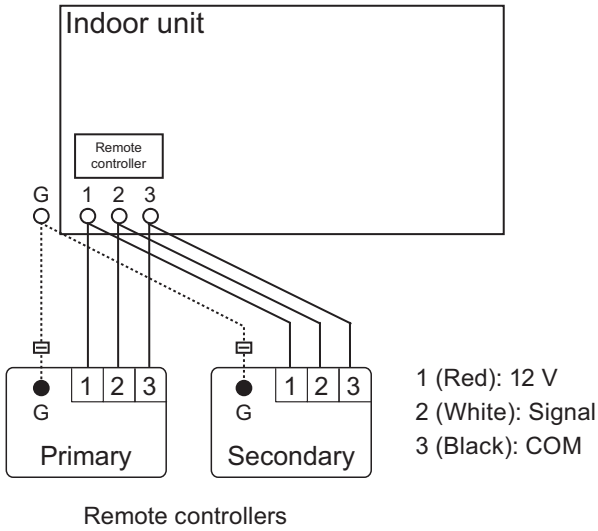

1 (Red): 12 V
2 (White): Signal
3 (Black): COM

■ Dimensions

Unit: mm

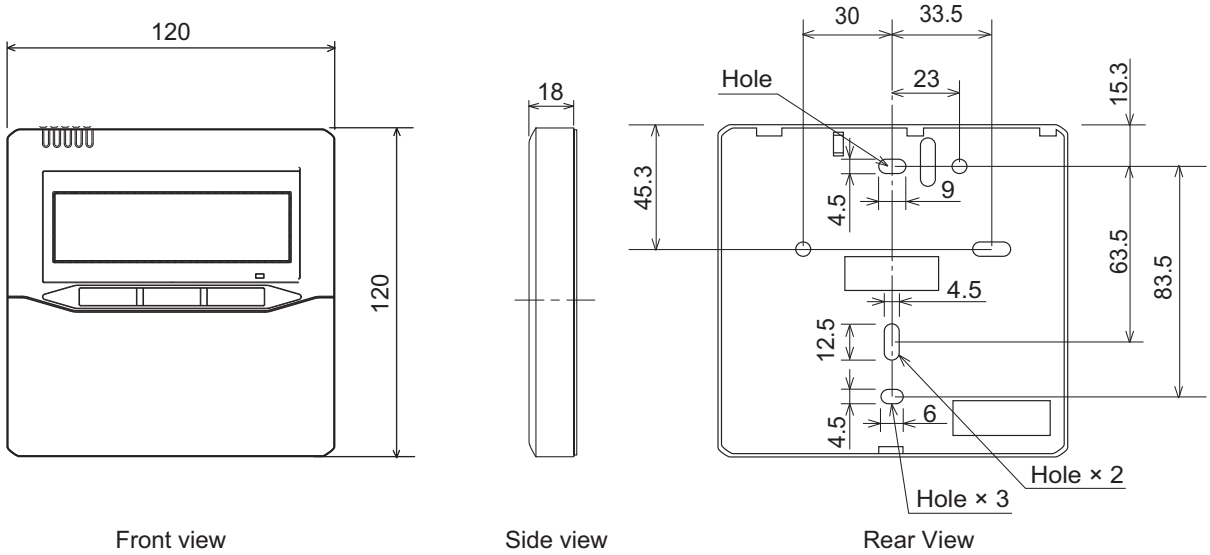

■ Installation

- **Connection pattern**

NOTE: Connection pattern is different according to type of Indoor unit.

Indoor unit type	Connection pattern
All cassette type	Pattern A
All duct type	Pattern A
All floor type	Pattern A
Floor/Ceiling type	Pattern A
All ceiling type	Pattern A
All wall mounted type	Pattern B

- **Pattern A**
  1. Connect the end of remote controller cable directly to the exclusive terminal block.
  2. Set the DIP switch (SW1) to “3WIRE” on the PCB of the indoor unit.

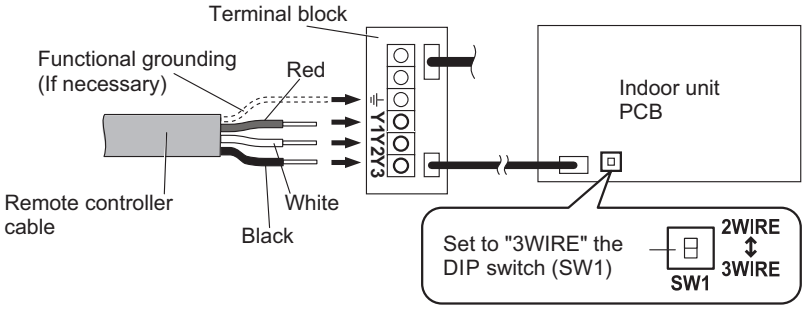

NOTES:
- Layout of terminal block and PCB is varies depending on the type of indoor unit.
- Operation may fail if it is connected to the outdoor unit or the terminal block for power supply.

CONTROL SYSTEM

- **Pattern B**
  1. Use a tool to cut off the terminal on the end of the remote controller cable, and then remove the insulation from the cut end of the cable as shown below.

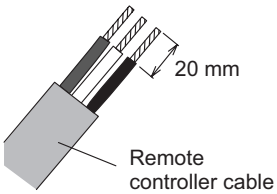

  2. Connect the remote controller cable and connecting cable as shown below. Be sure to insulate the connection between the cables.

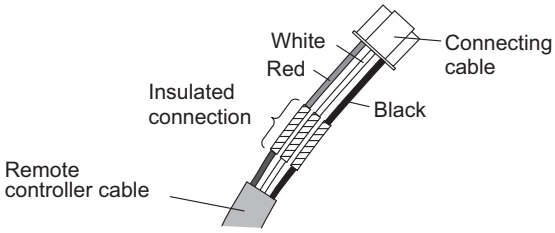

  3. Connect the remote controller cable to the connecting cable, and insert it to the connector. Set the DIP switch (SW1) to “3WIRE” on the PCB of the indoor unit.

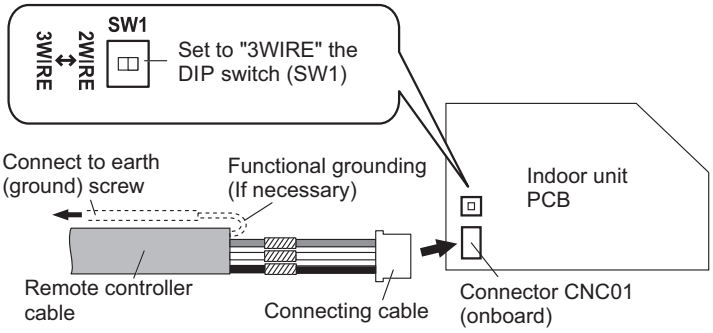

NOTE: Layout of terminal block and PCB is varies depending on the type of indoor unit.

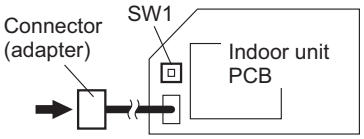

■ Specifications

Dimensions (H × W × D)	mm	120 × 120 × 18
Weight	g	160

● Wiring specifications

Use	Cable size	Wire type	Remarks
Remote controller cable	0.33 mm^2 (22 AWG)	Polar 3-core	Use sheathed PVC cable.

CONTROL SYSTEM

2-10. Simple remote controller (With operation mode: UTY-RSR∗)

- Easy operation
- Stylish design
- Large LCD screen and simple operation buttons
- Built-in background light function
- Easy installation with a slim shape with no bulge in the back.
- Up to 16 indoor units can be simultaneously controlled.
- Can be installed onto SW-BOX. (applies European and other country's standard)

■ Accessory

Name and shape	Q'ty	Application
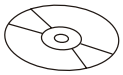 CD-ROM	1	
Screw	2	For installing the remote controller
Cable tie	1	For remote controller and remote controller cable binding
Installation manual	1	
Operation manual	1	

CONTROL SYSTEM

■ Overview

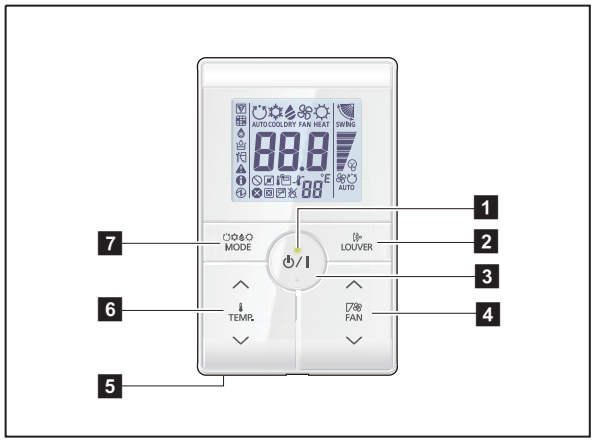

Display panel

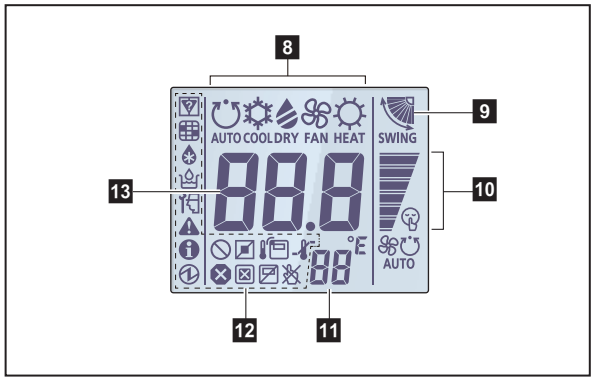

*1: Not available for a heat pump model unless it is set up as an administrative indoor unit.
*2: Not available for a heat pump model.
*3: Not available for a cooling-only model.
*4: Set the function setting of the indoor unit accordingly.
*5: During address display mode.

1 LED lamp

Lights during operation.

2 Louver button

Adjusts the airflow direction.

3 START/STOP button

Starts and stops operation.

4 FAN control button

Switches the fan speed as follows:

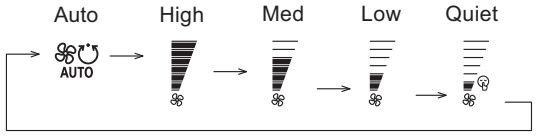

5 Room temperature sensor (inside)

Senses ambient temperature of unit.

6 Set temperature button

Selects the setting temperature.
18—30 °C (COOL), 10—30 °C (HEAT)

7 Operation mode button

Switches the operation mode as follows:

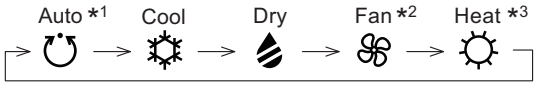

8 Operating mode indicator

9 Airflow direction indicator

10 FAN speed indicator

11 Remote controller address indicator

12 Status icons

- Mode mismatch
- Filter sign *4
- Defrost operation
- Oil recovery operation
- Under maintenance
- Error
- Special state
- Conducting electricity
- Emergency stop
- Operation controlled
- Forced stop
- Remote controller sensor is enabled *4
- Central controlled
- Setting temperature range is enabled
- Operation prohibited

13 Set temperature

Indicates indoor unit address. *5

CONTROL SYSTEM

System diagrams

- **1 remote controller**

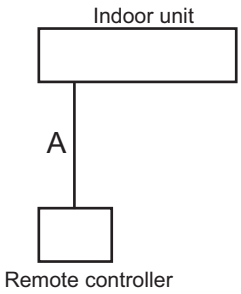

- **4 remote controllers**

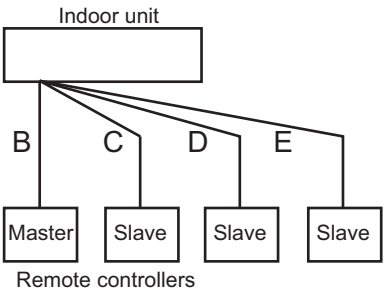

NOTES:

- A, B, C, D, E: Remote controller cable (For details of controller cable specifications, refer to "Controller cable" in Chapter 6. SYSTEM DESIGN on page 06-66.)
- A ≤ 500 m, B + C + D + E ≤ 500 m

Electrical wiring

1 remote controller:

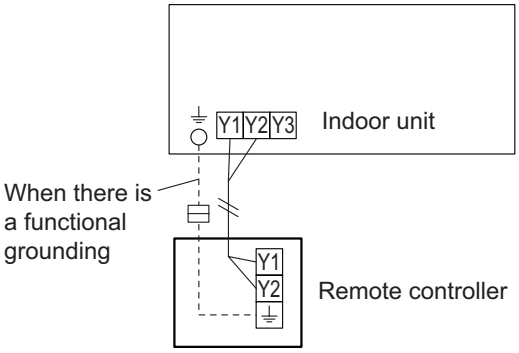

2 remote controllers:

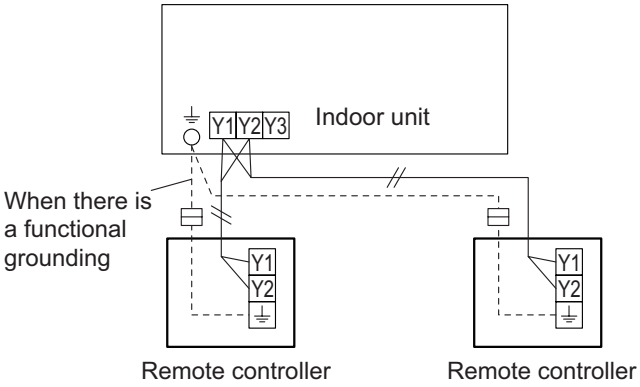

Group control:

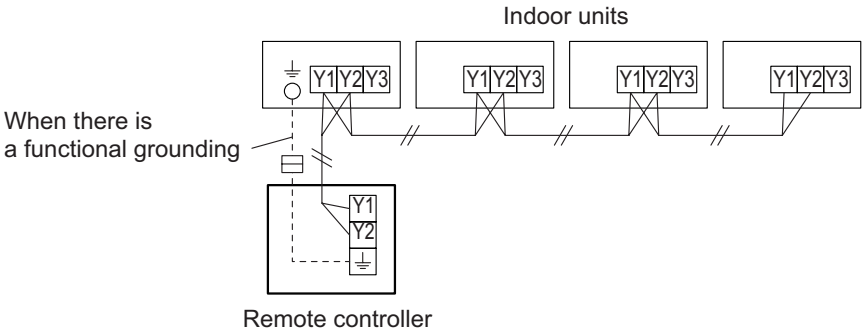

CONTROL SYSTEM

■ Dimensions

Unit: mm

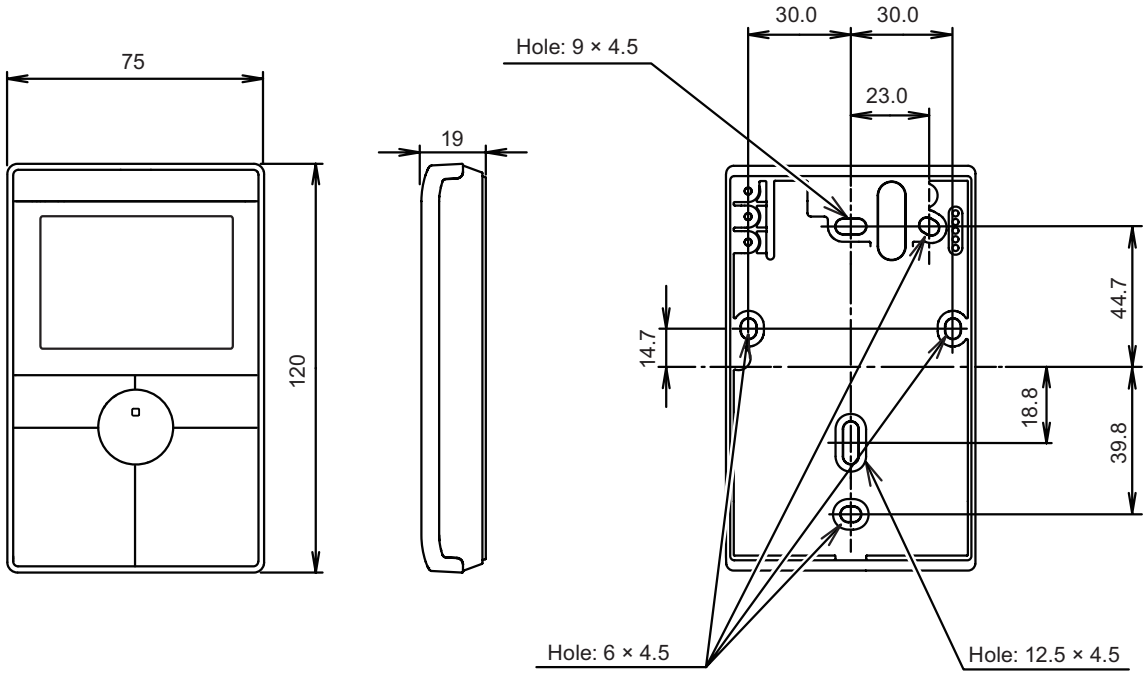

Front View Side View Rear View

■ Installation

- **Connection pattern**

NOTE: Connection pattern is different according to type of Indoor unit.

Indoor unit type	Connection pattern
All cassette type	Pattern A
All duct type	Pattern A
All floor type	Pattern A
Floor/Ceiling type	Pattern A
All ceiling type	Pattern A
All wall mounted type	Pattern B

- **Pattern A**
  1. Connect the end of remote controller cable directly to the exclusive terminal block.
  2. Set the DIP switch (SW1) to “2WIRE” on the PCB of the indoor unit.

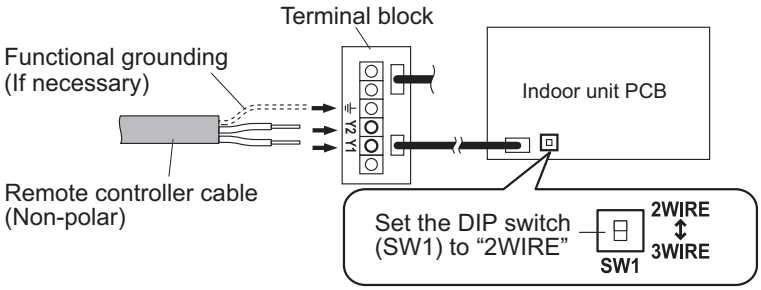

NOTES:
- Layout of terminal block and PCB is varies depending on the type of indoor unit.
- Operation may fail if it is connected to the outdoor unit or the terminal block for power supply.

- **Pattern B**
  1. Use a tool to cut off the terminal on the end of the remote controller cable, and then remove the insulation from the cut end of the cable as shown below.

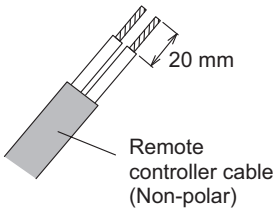

  2. Connect the remote controller cable and connecting cable as shown below. Be sure to insulate the connection between the cables.

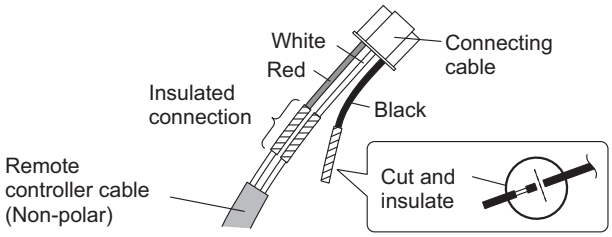

  3. Connect the remote controller cable to the connecting cable, and insert it to the connector. Set the DIP switch (SW1) to “2WIRE” on the PCB of the indoor unit.

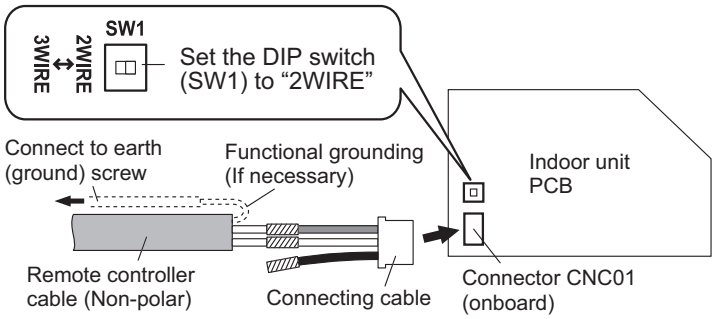

NOTE: Layout of terminal block and PCB is varies depending on the type of indoor unit.

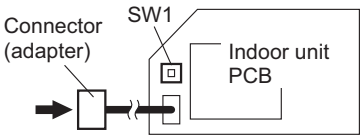

■ Specifications

Dimensions (H × W × D)	mm	120 × 75 × 19
Weight	g	120

● Wiring specifications

Use	Cable size	Cable type	Remarks
Remote controller cable	0.33 to 1.25 mm^2 (22 to 16 AWG)	Sheathed cable	Non polar 2-core, Twisted pair
		Shielded cable*	

*: Use shielded cable in accordance with local rules for remote controller cable.

CONTROL SYSTEM

2-11. Simple remote controller (With operation mode: UTY-RSK∗)

- Easy operation
- Built-in background light function
- Easy installation with a slim shape with no bulge in the back.
- Error history (Last 16 error codes can be accessed.)
- Up to 16 indoor units can be simultaneously controlled.
- Can be installed onto SW-BOX. (applies European and other country's standard)

■ Accessory

Name and shape	Q'ty	Application
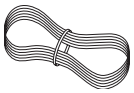 Remote controller cable	10 m	For connecting the remote controller
Screw	2	For installing the remote controller
Cable tie	1	For remote controller and remote controller cable binding
Installation manual	1	
Operation manual	1	

CONTROL SYSTEM

■ Overview

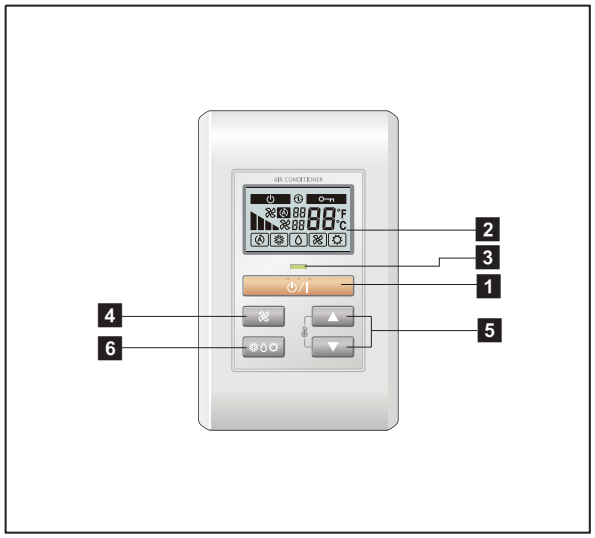

Display panel

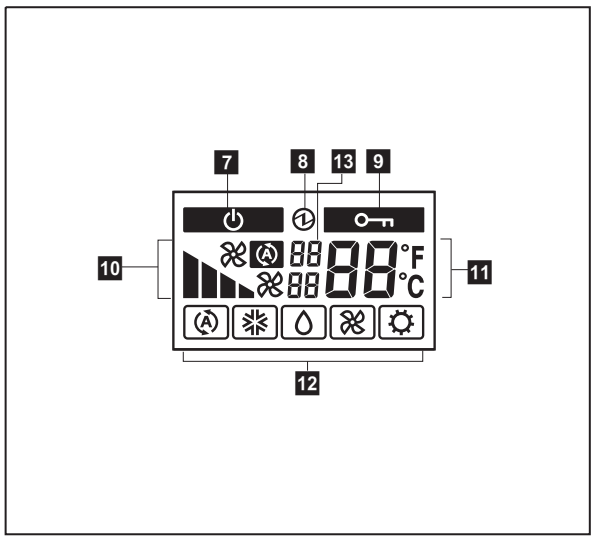

1 START/STOP button

Starts and stops operation.

2 Display backlight button

Lights during operation.

3 Operation lamp

Lights during operation.

4 FAN button

Selects the fan speed (AUTO, HIGH, MED, LOW, and QUIET).

5 SET TEMP. button

Selects the setting temperature.

6 MODE button

Selects the operating mode (AUTO, COOL, DRY, FAN, HEAT).

7 Standby indicator

Indicates during the oil recovery and defrosting operation.

8 Power source indicator

Indicates the main power is on.

9 Central control indicator

Indicates when function is locked.

10 Fan speed indicator

Deletes the weekly timer schedule.

11 Set temperature

- Indicates error history number in error code history display mode.
- Indicates indoor unit address in address display mode.

12 Operating mode indicator

13 Indicator

- Upper:
  - Indicates the error code in error code history display mode and in self diagnosis mode.
  - Indicates the refrigerant system address in address display mode.
- Lower: Indicates the remote controller address in error code history display mode, address display mode, and self diagnosis mode.

CONTROL SYSTEM

■ System diagram

1 remote controller:

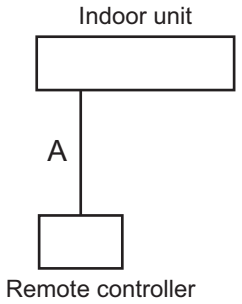

2 remote controllers:

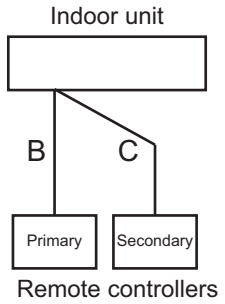

A, B, C: Remote controller cable
A ≤ 500 m;B + C ≤ 500 m

■ Electrical wiring

1 remote controller:

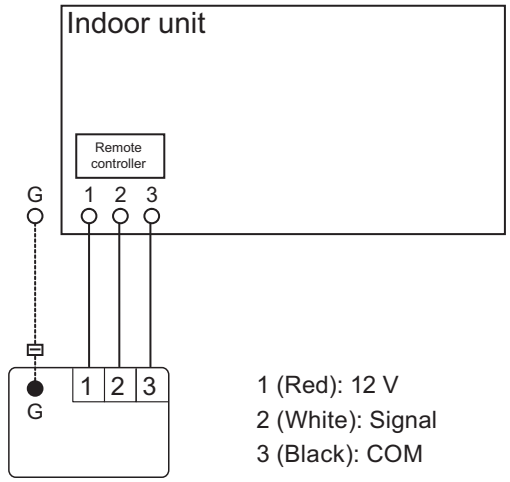

1 (Red): 12 V
2 (White): Signal
3 (Black): COM

2 remote controllers:

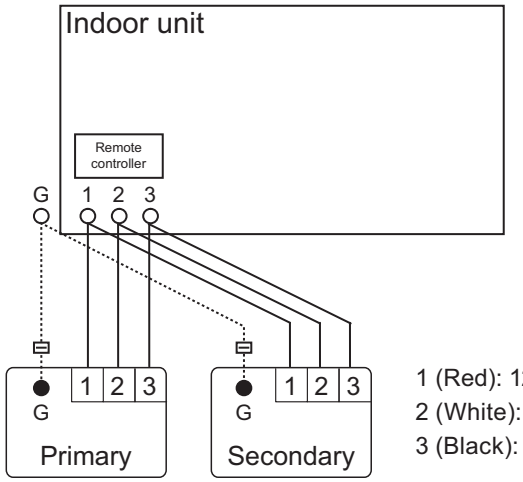

1 (Red): 12 V
2 (White): Signal
3 (Black): COM

■ Dimensions

Unit: mm

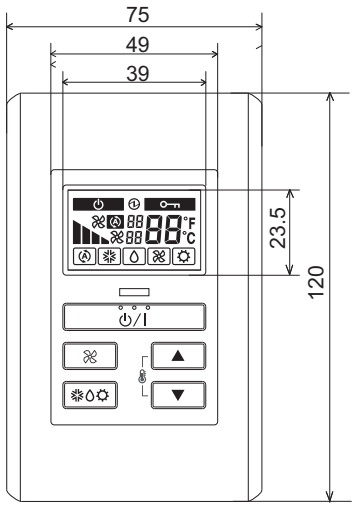

Front View

Side View

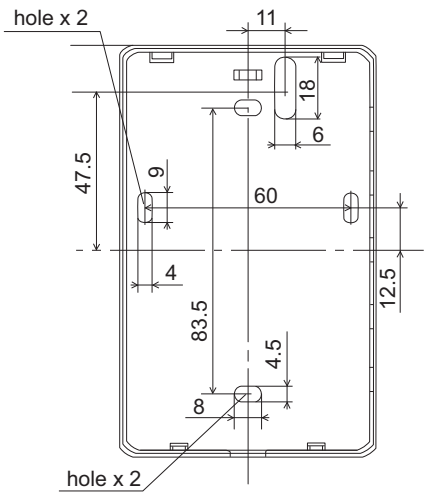

Rear View

CONTROL SYSTEM

■ Installation

- **Connection pattern**

NOTE: Connection pattern is different according to type of Indoor unit.

Indoor unit type	Connection pattern
All cassette type	Pattern A
All duct type	Pattern A
All floor type	Pattern A
Floor/Ceiling type	Pattern A
All ceiling type	Pattern A
All wall mounted type	Pattern B

- **Pattern A**
  1. Connect the end of remote controller cable directly to the exclusive terminal block.
  2. Set the DIP switch (SW1) to “3WIRE” on the PCB of the indoor unit.

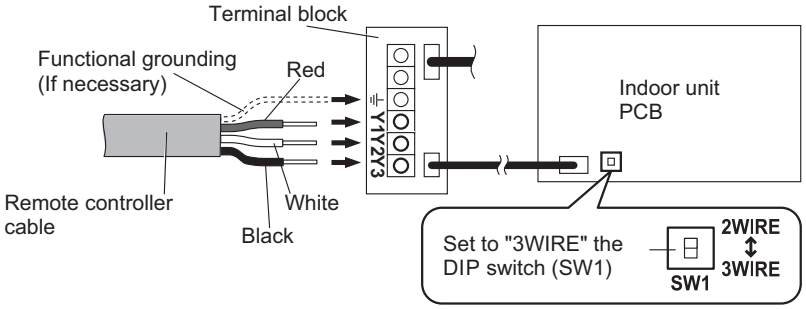

NOTES:
- Layout of terminal block and PCB is varies depending on the type of indoor unit.
- Operation may fail if it is connected to the outdoor unit or the terminal block for power supply.

CONTROL SYSTEM

- **Pattern B**
  1. Use a tool to cut off the terminal on the end of the remote controller cable, and then remove the insulation from the cut end of the cable as shown below.

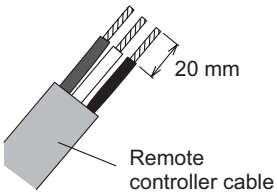

  2. Connect the remote controller cable and connecting cable as shown below. Be sure to insulate the connection between the cables.

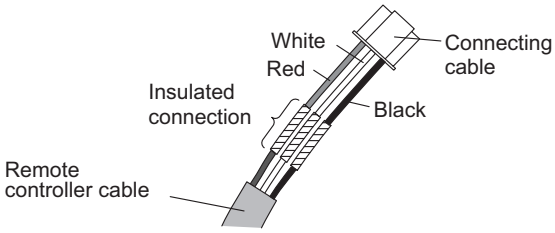

  3. Connect the remote controller cable to the connecting cable, and insert it to the connector. Set the DIP switch (SW1) to “3WIRE” on the PCB of the indoor unit.

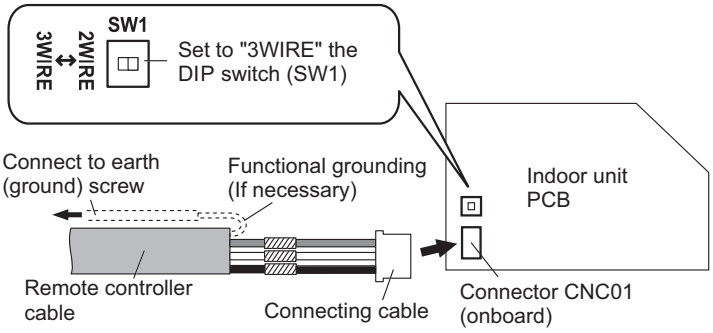

NOTE: Layout of terminal block and PCB is varies depending on the type of indoor unit.

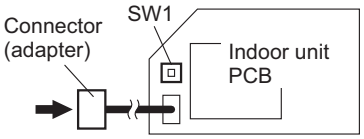

■ Specifications

Dimensions (H × W × D)	mm	120 × 75 × 14
Weight	g	90

● Wiring specifications

Use	Cable size	Wire type	Remarks
Remote controller cable	0.33 mm^2 (22 AWG)	Polar 3-core	Use sheathed PVC cable.

CONTROL SYSTEM

2-12. Simple remote controller (Without operation mode: UTY-RHR∗)

- Easy operation
- Stylish design
- Large LCD screen and simple operation buttons
- Built-in background light function
- Easy installation with a slim shape with no bulge in the back.
- Up to 16 indoor units can be simultaneously controlled.
- Can be installed onto SW-BOX. (applies European and other country's standard)

■ Accessory

Name and shape	Q'ty	Application
CD-ROM	1	
Screw	2	For installing the remote controller
Cable tie	1	For remote controller and remote controller cable binding
Installation manual	1	
Operation manual	1	

CONTROL SYSTEM

CONTROL SYSTEM

■ Overview

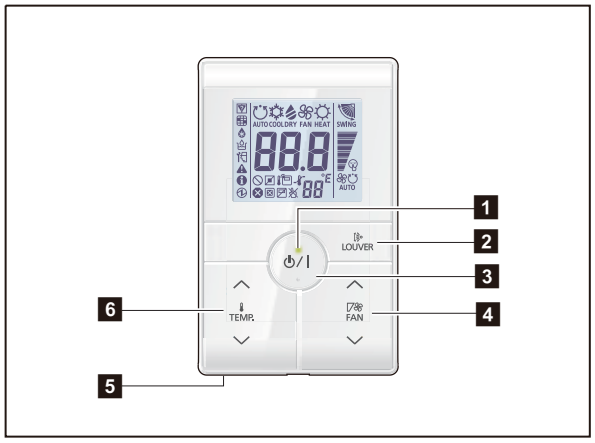

Display panel

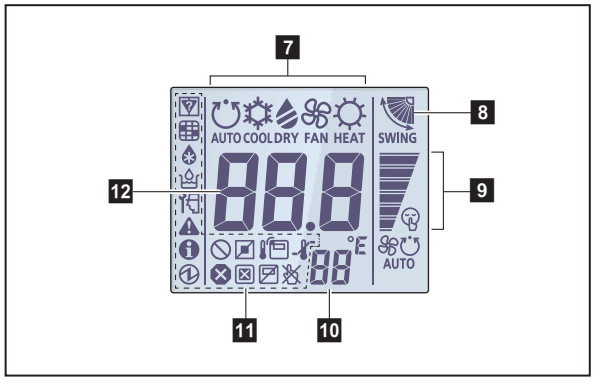

*1: Not available for a heat pump model unless it is set up as an administrative indoor unit.
*2: Not available for a heat pump model.
*3: Not available for a cooling-only model.
*4: Set the function setting of the indoor unit accordingly.
*5: During address display mode.

1 LED lamp
Lights during operation.

2 Louver button
Adjusts the airflow direction.

3 START/STOP button
Starts and stops operation.

4 FAN control button
Switches the fan speed as follows:

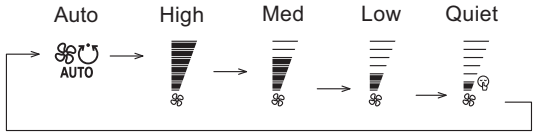

5 Room temperature sensor (inside)
Senses ambient temperature of unit.

6 Set temperature button
Selects the setting temperature.
18—30 °C (COOL), 10—30 °C (HEAT)

7 Operating mode indicator

8 Airflow direction indicator

9 FAN speed indicator

10 Remote controller address indicator

11 Status icons

- Mode mismatch
- Filter sign *4
- Defrost operation
- Oil recovery operation
- Under maintenance
- Error
- Special state
- Conducting electricity
- Emergency stop
- Operation controlled
- Forced stop
- Remote controller sensor is enabled *4
- Central controlled
- Setting temperature range is enabled
- Operation prohibited

12 Set temperature
Indicates indoor unit address. *5

CONTROL SYSTEM

CONTROL SYSTEM

System diagrams

- **1 remote controller**

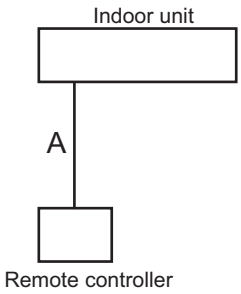

- **4 remote controllers**

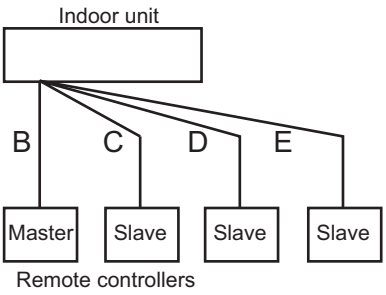

NOTES:

- A, B, C, D, E: Remote controller cable (For details of controller cable specifications, refer to "Controller cable" in Chapter 6. SYSTEM DESIGN on page 06-66.)
- A ≤ 500 m, B + C + D + E ≤ 500 m

Electrical wiring

1 remote controller:

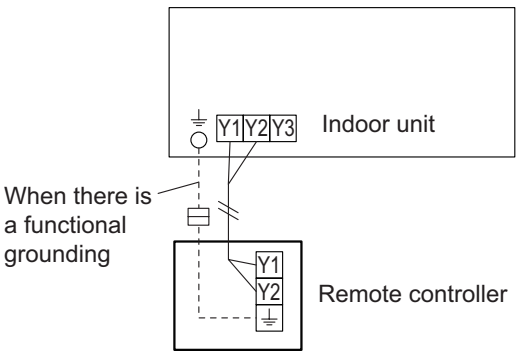

2 remote controllers:

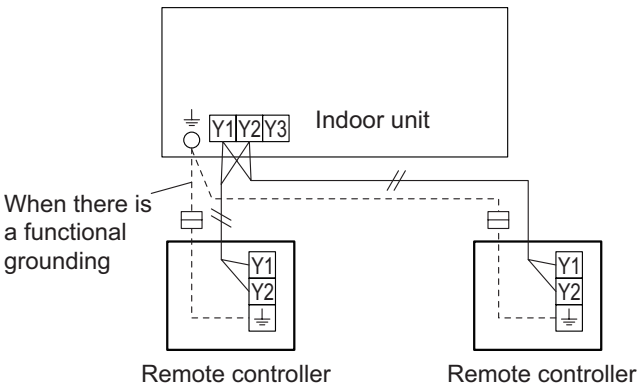

Group control:

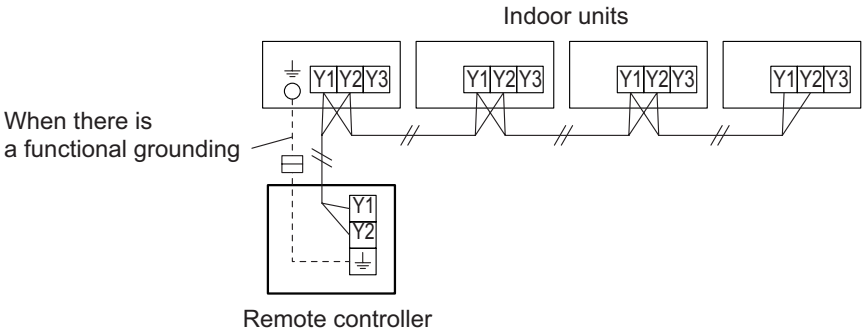

CONTROL SYSTEM

■ Dimensions

Unit: mm

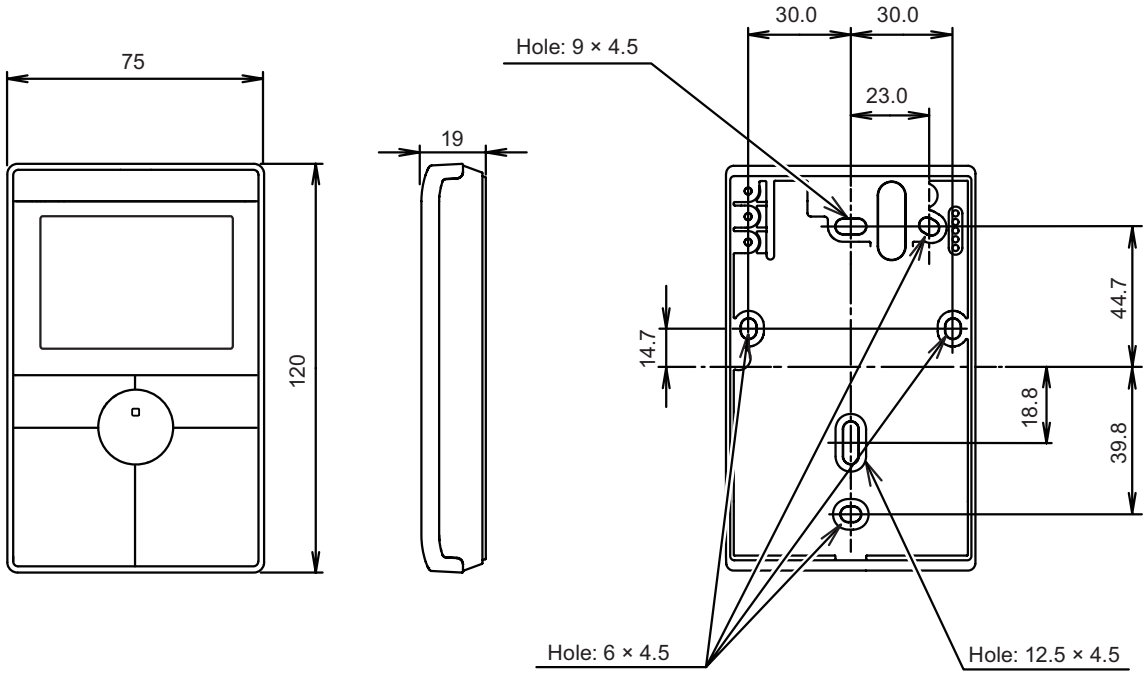

Front View Side View Rear View

■ Installation

- **Connection pattern**

NOTE: Connection pattern is different according to type of Indoor unit.

Indoor unit type	Connection pattern
All cassette type	Pattern A
All duct type	Pattern A
All floor type	Pattern A
Floor/Ceiling type	Pattern A
All ceiling type	Pattern A
All wall mounted type	Pattern B

- **Pattern A**
  1. Connect the end of remote controller cable directly to the exclusive terminal block.
  2. Set the DIP switch (SW1) to “2WIRE” on the PCB of the indoor unit.

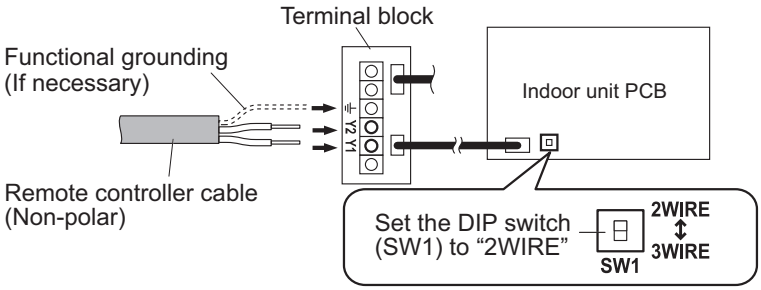

NOTES:
- Layout of terminal block and PCB is varies depending on the type of indoor unit.
- Operation may fail if it is connected to the outdoor unit or the terminal block for power supply.

- **Pattern B**
  1. Use a tool to cut off the terminal on the end of the remote controller cable, and then remove the insulation from the cut end of the cable as shown below.

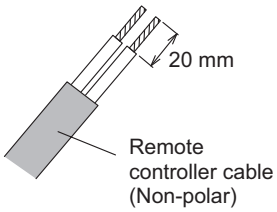

  2. Connect the remote controller cable and connecting cable as shown below. Be sure to insulate the connection between the cables.

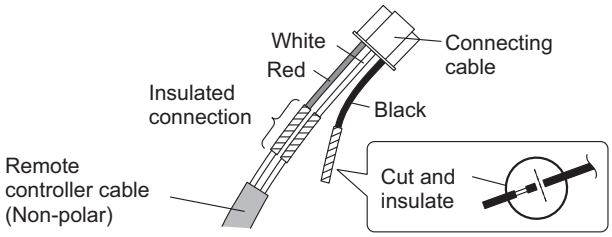

  3. Connect the remote controller cable to the connecting cable, and insert it to the connector. Set the DIP switch (SW1) to “2WIRE” on the PCB of the indoor unit.

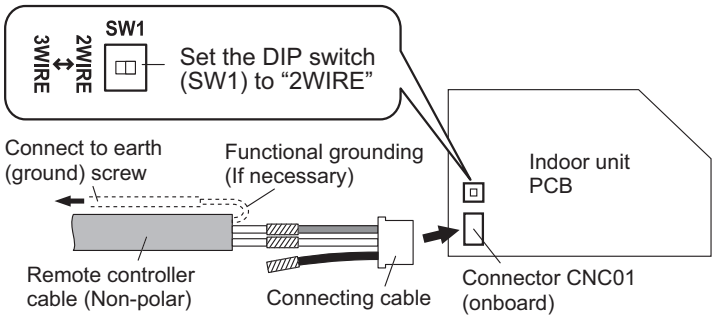

NOTE: Layout of terminal block and PCB is varies depending on the type of indoor unit.

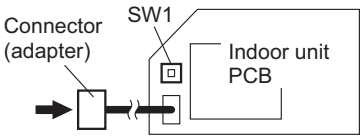

■ Specifications

Dimensions (H × W × D)	mm	120 × 75 × 19
Weight	g	120

● Wiring specifications

Use	Cable size	Cable type	Remarks
Remote controller cable	0.33 to 1.25 mm^2 (22 to 16 AWG)	Sheathed cable	Non polar 2-core, Twisted pair
		Shielded cable*	

*: Use shielded cable in accordance with local rules for remote controller cable.

CONTROL SYSTEM

2-13. Simple remote controller (Without operation mode: UTY-RHK∗)

- Easy operation
- Built-in background light function
- Easy installation with a slim shape with no bulge in the back.
- Error history (Last 16 error codes can be accessed.)
- Up to 16 indoor units can be simultaneously controlled.
- Can be installed onto SW-BOX. (applies European and other country's standard)
- Concentrates on the basic operations such as Start/Stop, Fan control, and Temperature setting.

■ Accessory

Name and shape	Q'ty	Application
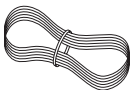 Remote controller cable	10 m	For connecting the remote controller
Screw	2	For installing the remote controller
Cable tie	1	For remote controller and remote controller cable binding
Installation manual	1	
Operation manual	1	

CONTROL SYSTEM

■ Overview

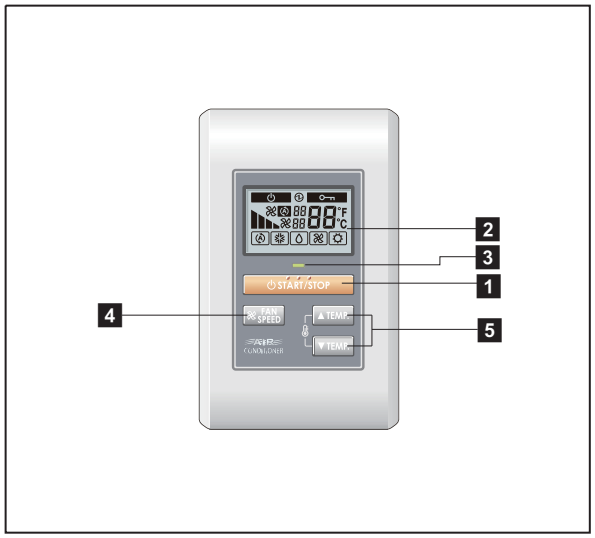

Display panel

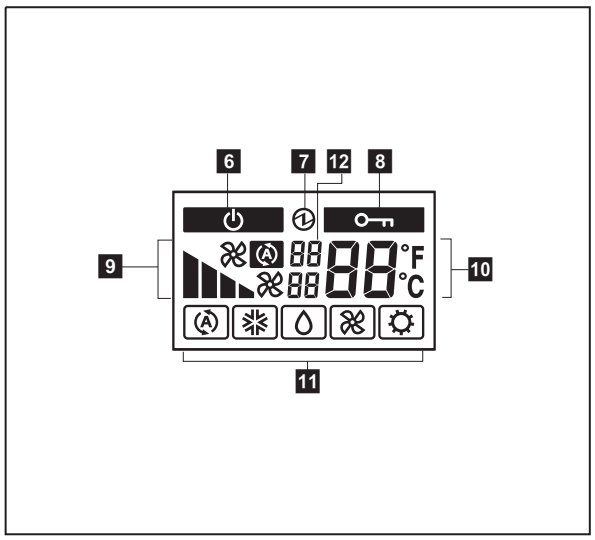

1 START/STOP button

Starts and stops operation.

2 Display backlight button

Lights during operation.

3 Operation lamp

Lights during operation.

4 FAN button

Selects the fan speed (AUTO, HIGH, MED, LOW, and QUIET).

5 SET TEMP. button

Selects the setting temperature.

6 Standby indicator

Indicates during the oil recovery and defrosting operation.

7 Power source indicator

Indicates the main power is on.

8 Central control indicator

Indicates when function is locked.

9 Fan speed indicator

Deletes the weekly timer schedule.

10 Set temperature

- Indicates error history number in error code history display mode.
- Indicates indoor unit address in address display mode.

11 Operating mode indicator

12 Indicator

- Upper:
  - Indicates the error code in error code history display mode and in self diagnosis mode.
  - Indicates the refrigerant system address in address display mode.
- Lower: Indicates the remote controller address in error code history display mode, address display mode, and self diagnosis mode.

CONTROL SYSTEM

■ System diagram

1 remote controller:

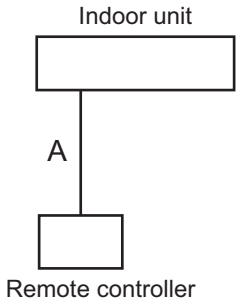

2 remote controllers:

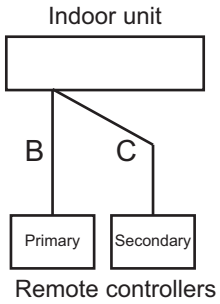

A, B, C: Remote controller cable
A ≤ 500 m;B + C ≤ 500 m

■ Electrical wiring

1 remote controller:

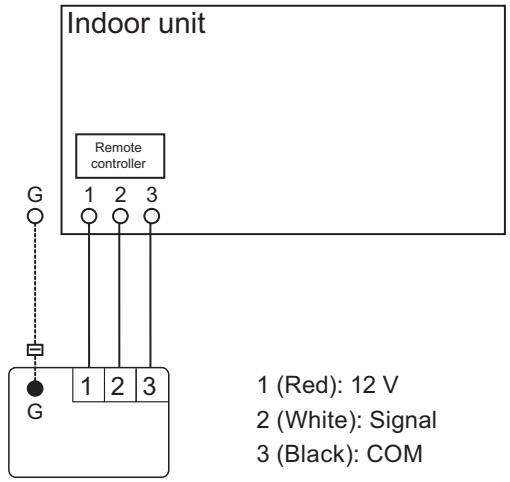

1 (Red): 12 V
2 (White): Signal
3 (Black): COM

2 remote controllers:

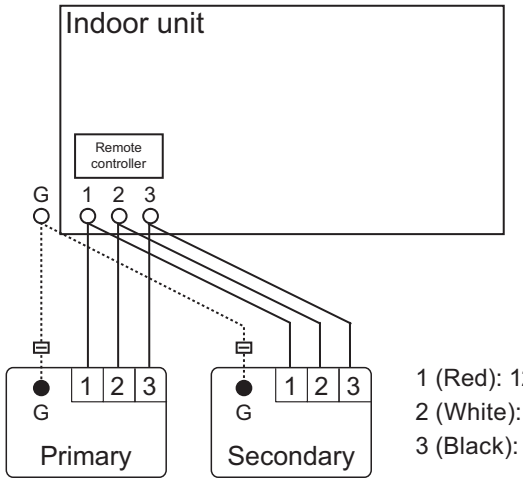

1 (Red): 12 V
2 (White): Signal
3 (Black): COM

■ Dimensions

Unit: mm

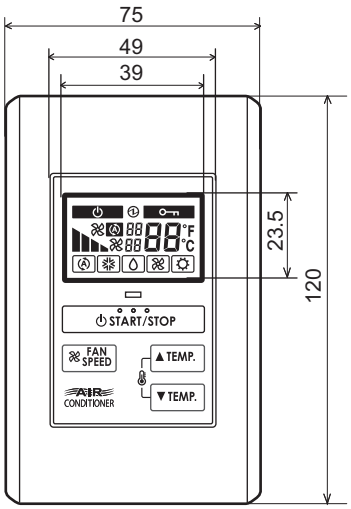

Front View

Side View

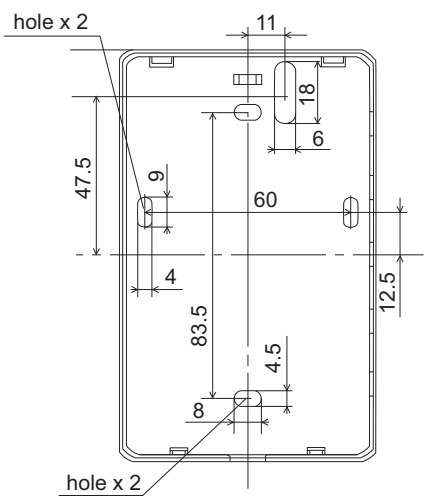

Rear View

CONTROL SYSTEM

■ Installation

- **Connection pattern**

NOTE: Connection pattern is different according to type of Indoor unit.

Indoor unit type	Connection pattern
All cassette type	Pattern A
All duct type	Pattern A
All floor type	Pattern A
Floor/Ceiling type	Pattern A
All ceiling type	Pattern A
All wall mounted type	Pattern B

- **Pattern A**
  1. Connect the end of remote controller cable directly to the exclusive terminal block.
  2. Set the DIP switch (SW1) to “3WIRE” on the PCB of the indoor unit.

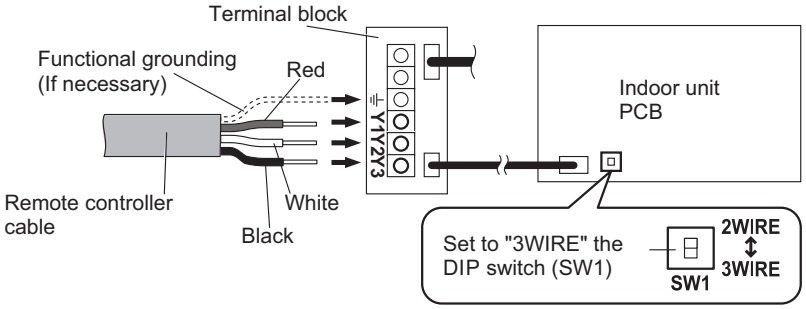

NOTES:
- Layout of terminal block and PCB is varies depending on the type of indoor unit.
- Operation may fail if it is connected to the outdoor unit or the terminal block for power supply.

CONTROL SYSTEM

- **Pattern B**
  1. Use a tool to cut off the terminal on the end of the remote controller cable, and then remove the insulation from the cut end of the cable as shown below.

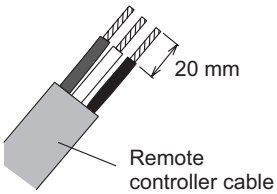

  2. Connect the remote controller cable and connecting cable as shown below. Be sure to insulate the connection between the cables.

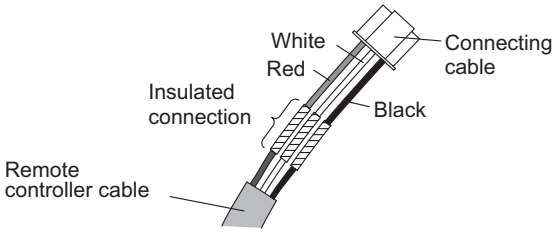

  3. Connect the remote controller cable to the connecting cable, and insert it to the connector. Set the DIP switch (SW1) to “3WIRE” on the PCB of the indoor unit.

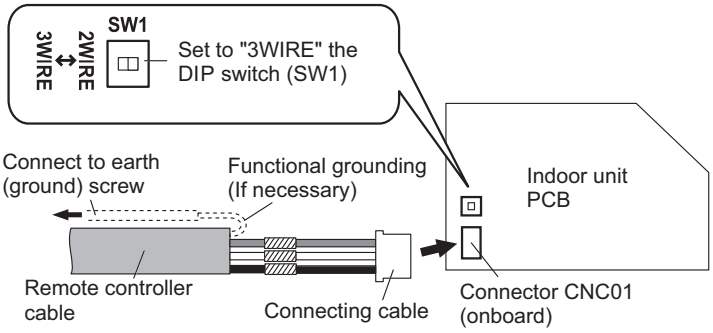

NOTE: Layout of terminal block and PCB is varies depending on the type of indoor unit.

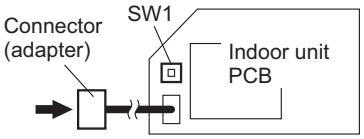

■ Specifications

Dimensions (H × W × D)	mm	120 × 75 × 14
Weight	g	90

● Wiring specifications

Use	Cable size	Wire type	Remarks
Remote controller cable	0.33 mm^2 (22 AWG)	Polar 3-core	Use sheathed PVC cable.

CONTROL SYSTEM

2-14. Wireless remote controller (UTY-LNH∗)

- 4 mode time setup available (On/Off/Program/Sleep).
- Up to 16 indoor units connected within the remote controller group can be simultaneously controlled.
- Can be used jointly with wired remote controllers.
- Easy to change custom code (max 4 codes)

■ Accessory

Name and shape	Q'ty	Application
Screw	2	For installing the remote controller
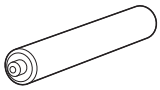 Battery (1.5 V [R03/AAA])	2	For remote controller
Remote controller holder	1	For remote controller
Installation manual	1	
Operation manual	1	

CONTROL SYSTEM

■ Overview

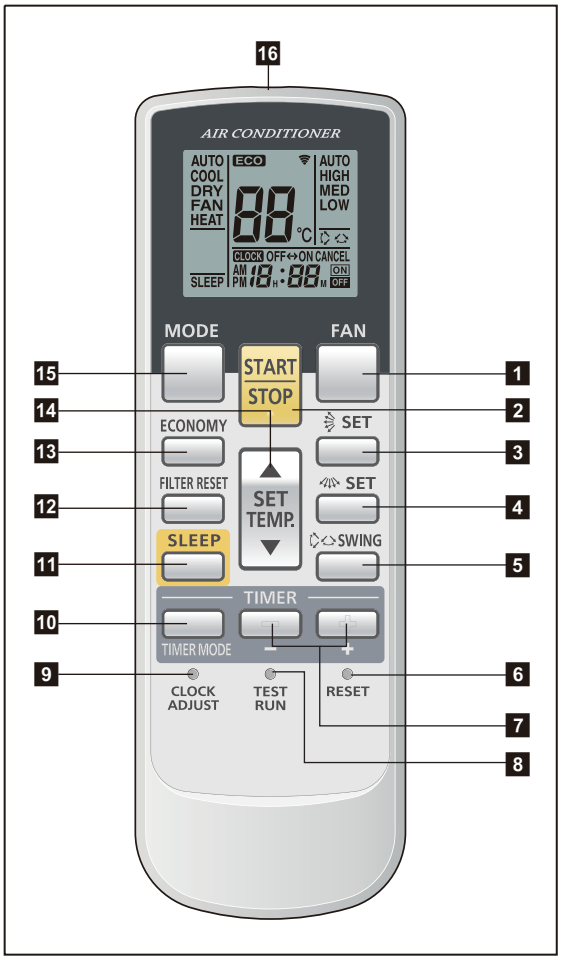

Display panel

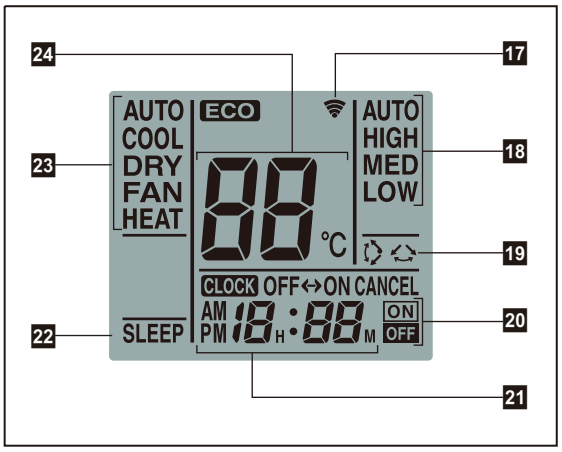

NOTE: Functions may differ by type of the indoor unit. For details, refer to the operation manual.

1 FAN button
Selects the fan speed (AUTO, HIGH, MED, and LOW).

2 START/STOP button
Starts and stops operation.

3 SET button (vertical)
Adjusts the vertical airflow direction.

4 SET button (horizontal)
Adjusts the horizontal airflow direction.

5 SWING button
Sets the automatic swing operation and selects swing mode (Up/down, Left/right, Up/down/left/right, and Stop swing).

6 RESET button
Used when replacing batteries.

7 Timer set (- / +) button
Sets the current time and on-off time.

8 TEST RUN button
Only used for the initial test in the unit installation.

9 CLOCK ADJUST button
Used for adjusting the clock.

10 TIMER MODE button
Selects the timer mode (off timer, on timer, program timer, and timer reset).

11 SLEEP button
Pressed to select sleep timer.

12 FILTER RESET button

13 ECONOMY button

14 SET TEMP. (temperature) (▲ / ▼) button
- Sets desired temperature.
- Sets remote controller custom code.

15 MODE button
- Switches operation mode (AUTO, COOL, DRY, FAN, and HEAT).
- Starts/ends the remote controller custom code (max. 4 types) change.

16 Signal transmitter

17 Signal transmit indicator

18 Fan speed indicator

19 Swing indicator

20 Timer mode indicator

21 Clock indicator

22 Sleep indicator

23 Operating mode indicator

24 Temperature indicator

CONTROL SYSTEM

■ System diagrams

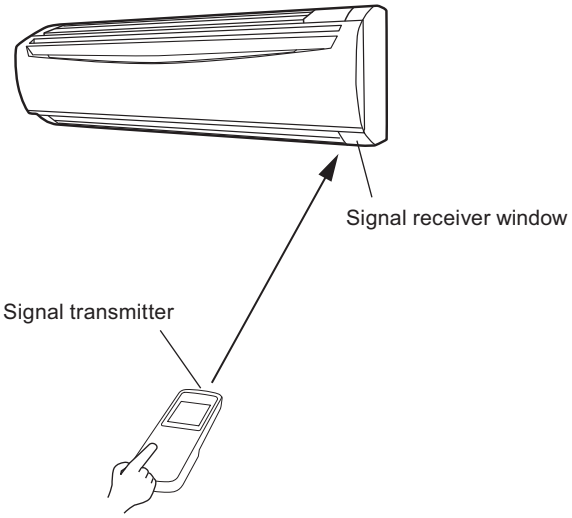

- Control signal might not be recognized in following cases:
  - A curtain or wall, etc. exists between transmitter and receiver.
  - There is an instant-start type (inverter type, etc.) fluorescent lamp in the room.

- Air conditioner might not work correctly when strong light hits the signal receiver window.
  Shut off the direct sunlight and also make illuminator far away from the signal receiver window.

CONTROL SYSTEM

■ Dimensions

Unit: mm

- **Controller**

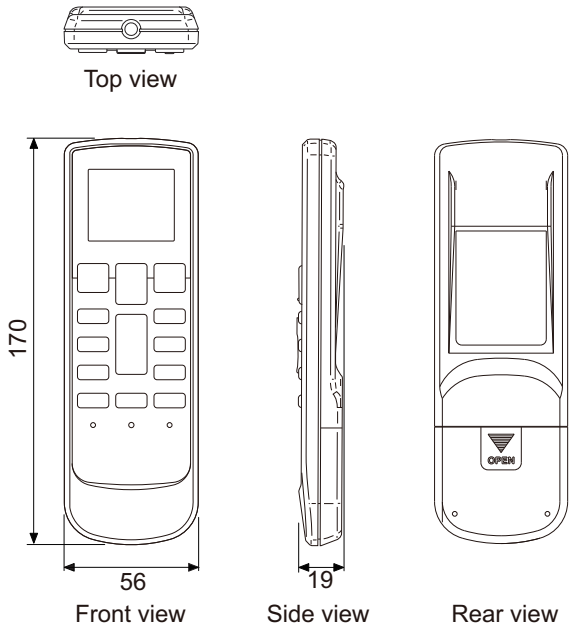

- **Holder**

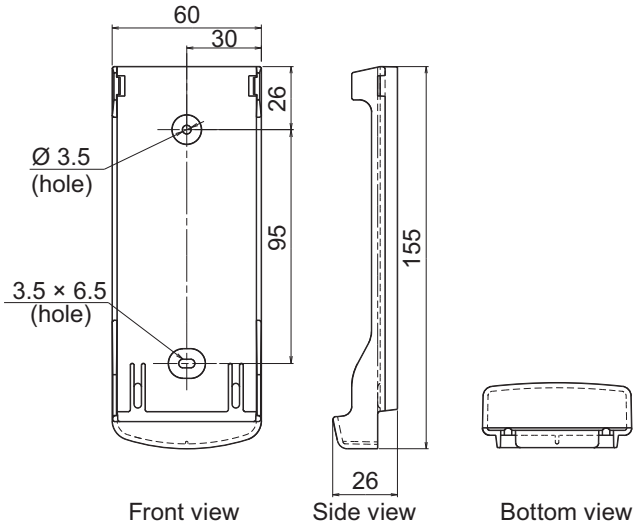

■ Specifications

Dimensions (H × W × D)	mm	170 × 56 × 19
Weight (without batteries)	g	85

CONTROL SYSTEM

2-15. IR receiver unit (UTB-YWC)

Duct type indoor unit can be controlled with Wireless remote controller if the IR receiver unit is used.

■ Accessory

Name and shape	Q'ty	Application
Cover	1	For receiver unit
Insulation	1	For receiver unit
Cable tie	Small: 1 Medium: 1	For receiver unit
Screw (M4 × 10 mm)	2	For attaching the hook metal to the indoor unit
Screw (M4 × 12 mm)	1	For attaching the hook metal to holder cover
Screw (M4 × 20 mm)	2	For installing receiver unit to wall, etc.
Connection cable A (5 m)	1	For connecting PCB of indoor unit to receiver unit
Connection cable B (0.15 m)	1	
Connection cable D (0.15 m)	1	For connecting PCB of indoor unit to receiver unit
Hook metal	1	For installing receiver unit to indoor unit
Bracket (cover)	1	For receiver unit
Installation manual	1	

CONTROL SYSTEM

■ Overview

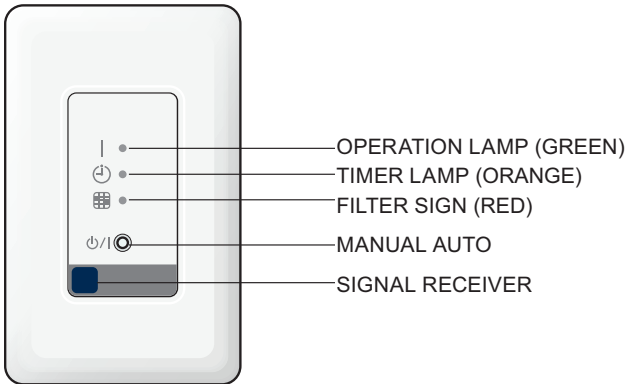

■ System diagrams

- **Attachment range**

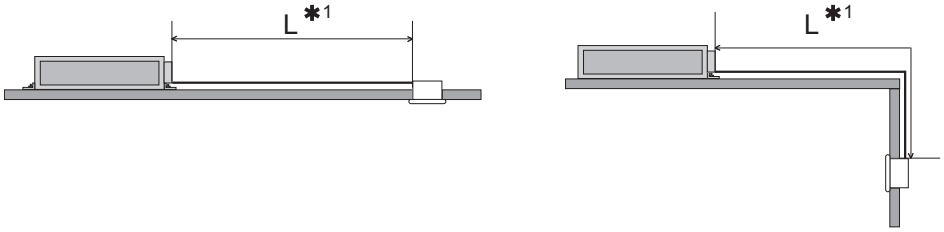

*1: Connection cable length L
– Cable A (Standard accessory): 5 m
– Cable C (Optional service part): 10 m

- **Signal angle**

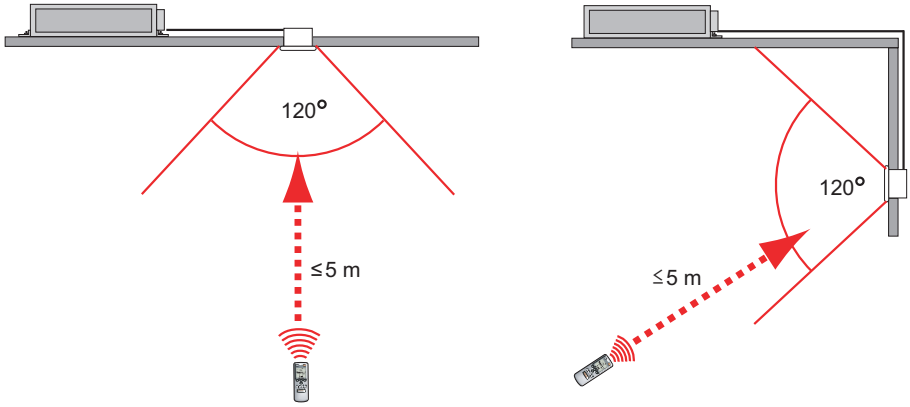

CONTROL SYSTEM

CONTROL SYSTEM

■ Electrical wiring

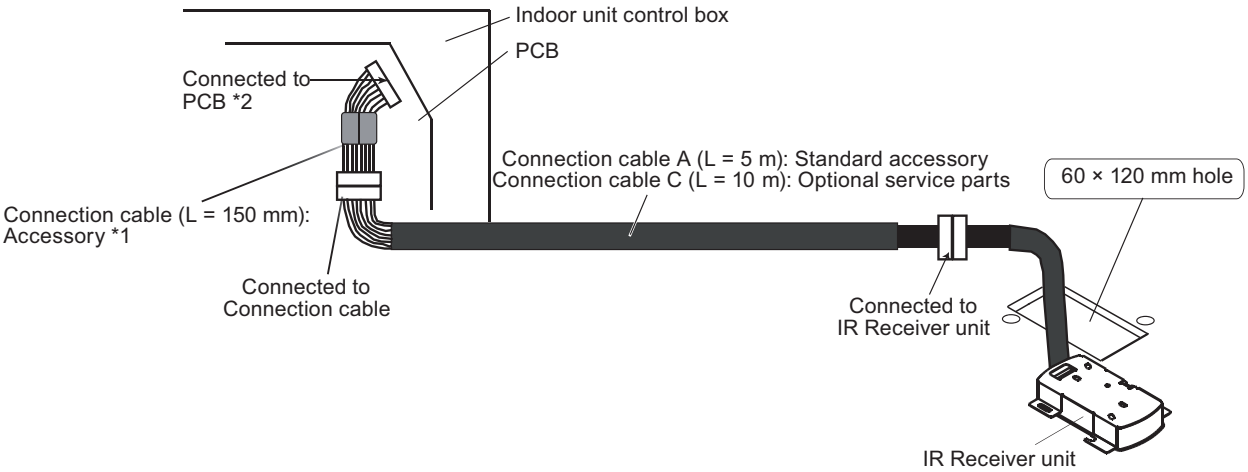

*1:	Connection cable	Connection cable D
*2:	Connected to PCB	CN18

■ Dimensions

Unit: mm

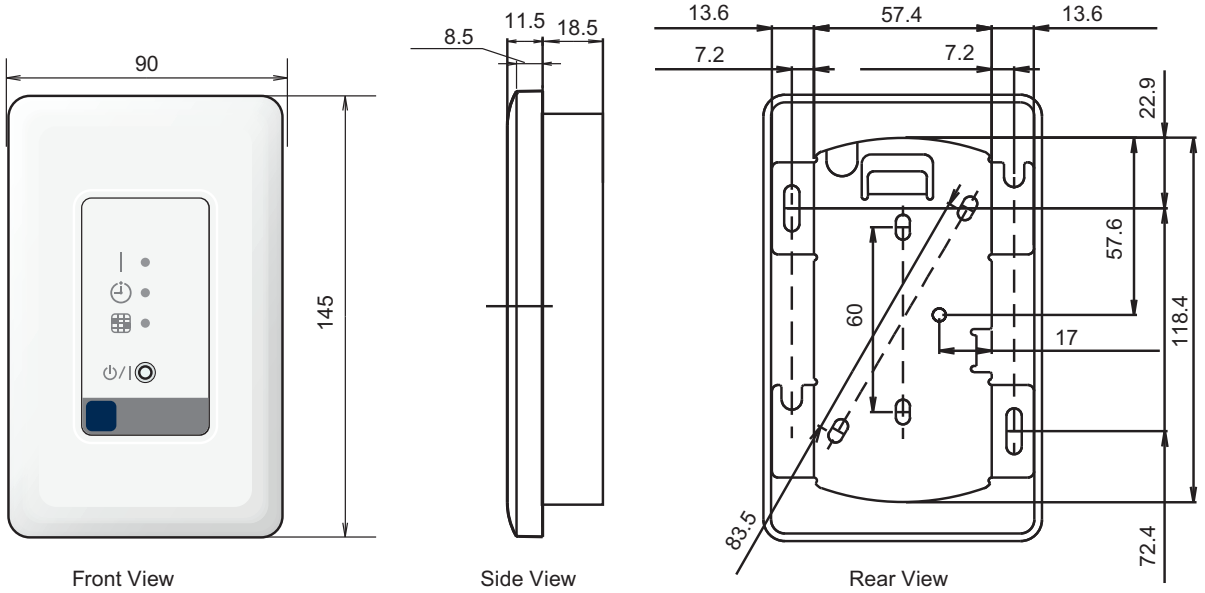

■ Specifications

Dimensions (H × W × D)	mm	145 × 90 × 30
Weight	g	150

■ Optional service part

Use the parts number shown below to order the cable from your representative.
Use the shield type connection cable in accordance with standard of your country.

Name and shape	Type	Parts No.
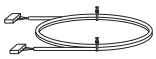 Connection cable C (10 m)	Non-Shielded	9378143012
	Shielded	9378143036

CONTROL SYSTEM

2-16. IR receiver unit (UTY-TRHX)

3D flow cassette type and Duct type indoor unit can be controlled with Wireless remote controller if the IR receiver unit is used.

■ Accessory

Name and shape	Q'ty	Application
Cover	1	For receiver unit
Insulation	1	For receiver unit
Cable tie	Small: 1 Medium: 1	For receiver unit
Screw (M4 × 10 mm)	2	For attaching the hook metal to the indoor unit
Screw (M4 × 12 mm)	1	For attaching the hook metal to holder cover
Screw (M4 × 20 mm)	2	For installing receiver unit to wall, etc.
Connection cable A (5 m)	1	For connecting PCB of indoor unit to receiver unit
Connection cable B (0.2 m)	1	
Hook metal	1	For installing receiver unit to indoor unit
Bracket (cover)	1	For receiver unit
Installation manual	1	

CONTROL SYSTEM

■ Overview

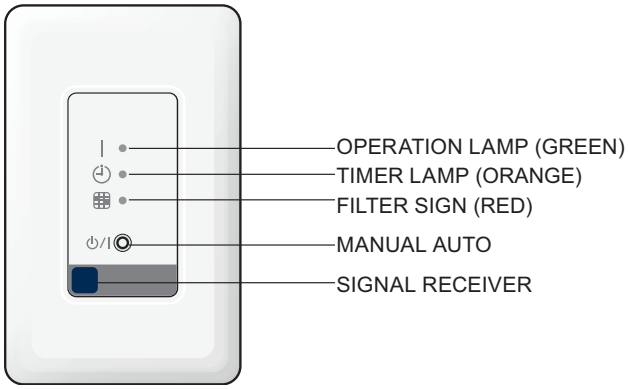

■ System diagrams

- **Attachment range**

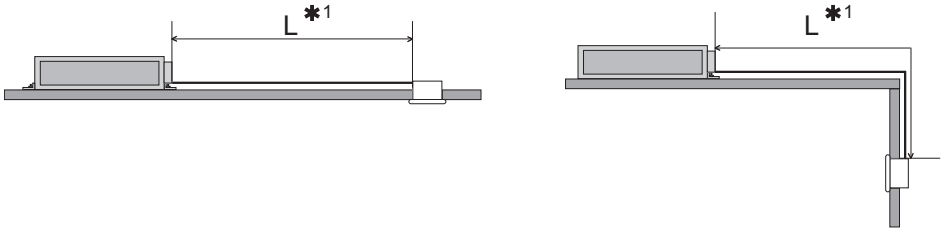

*1: Connection cable length L
– Cable A (Standard accessory): 5 m
– Cable C (Optional service part): 10 m

- **Signal angle**

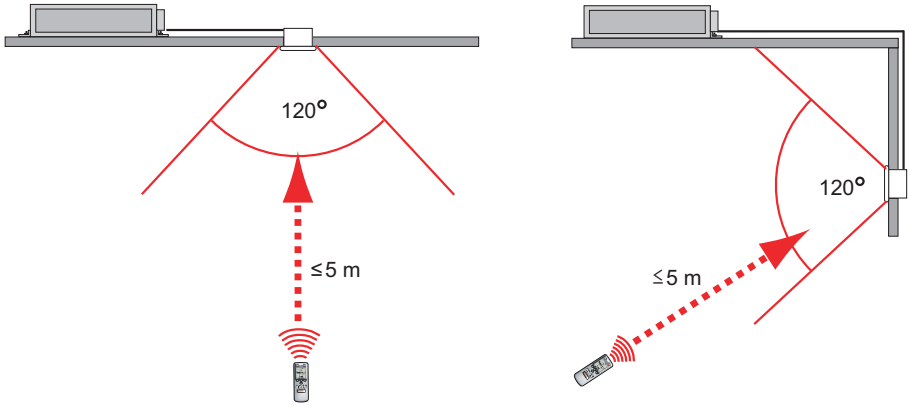

CONTROL SYSTEM

CONTROL SYSTEM

■ Electrical wiring

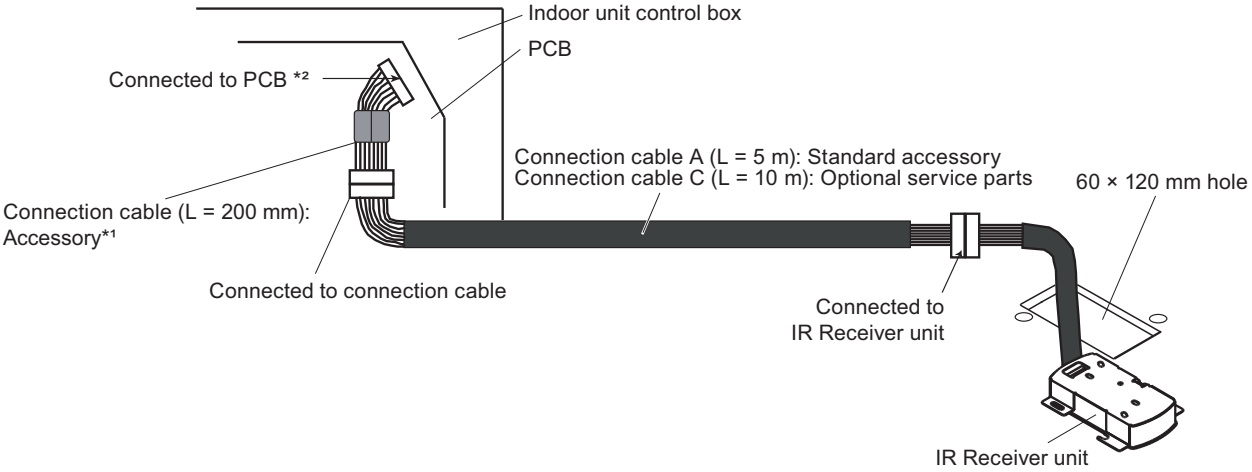

*1:	Connection cable	Connection cable B
*2:	Connected to PCB	CN48

■ Dimensions

Unit: mm

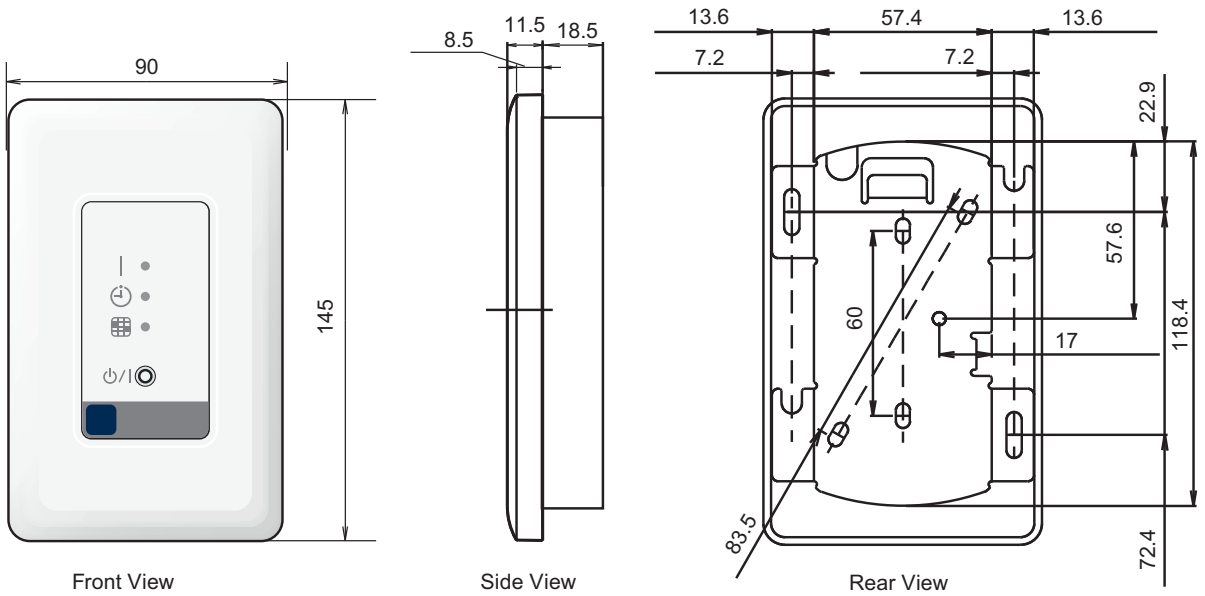

■ Specifications

Dimensions (H × W × D)	mm	145 × 90 × 30
Weight	g	150

■ Optional service part

Use the parts number shown below to order the cable from your representative.
Use the shield type connection cable in accordance with standard of your country.

Name and shape	Application	Parts No.
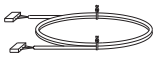 IR receiver unit cable C (10 m)	For extending the IR receiver unit cable	9710358012

NOTE: This part cannot be used for 3D flow cassette type.

CONTROL SYSTEM

2-17. IR receiver unit (For cassette type: UTY-LRH∗B1)

Cassette type indoor unit can be controlled with Wireless remote controller if the IR receiver unit is used.

■ Accessory

Name and shape	Q'ty	Application
Strap	1	For preventing receiver from falling down
Installation manual	1	

■ Overview

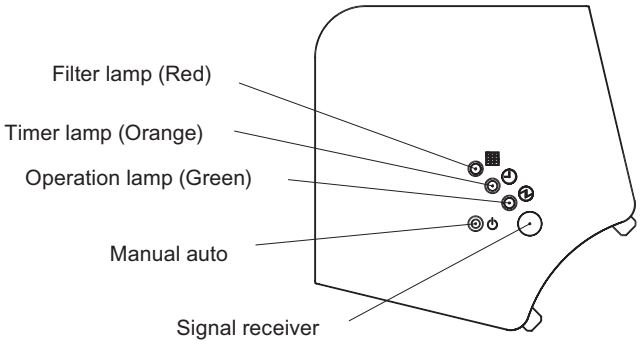

CONTROL SYSTEM

■ Electrical wiring

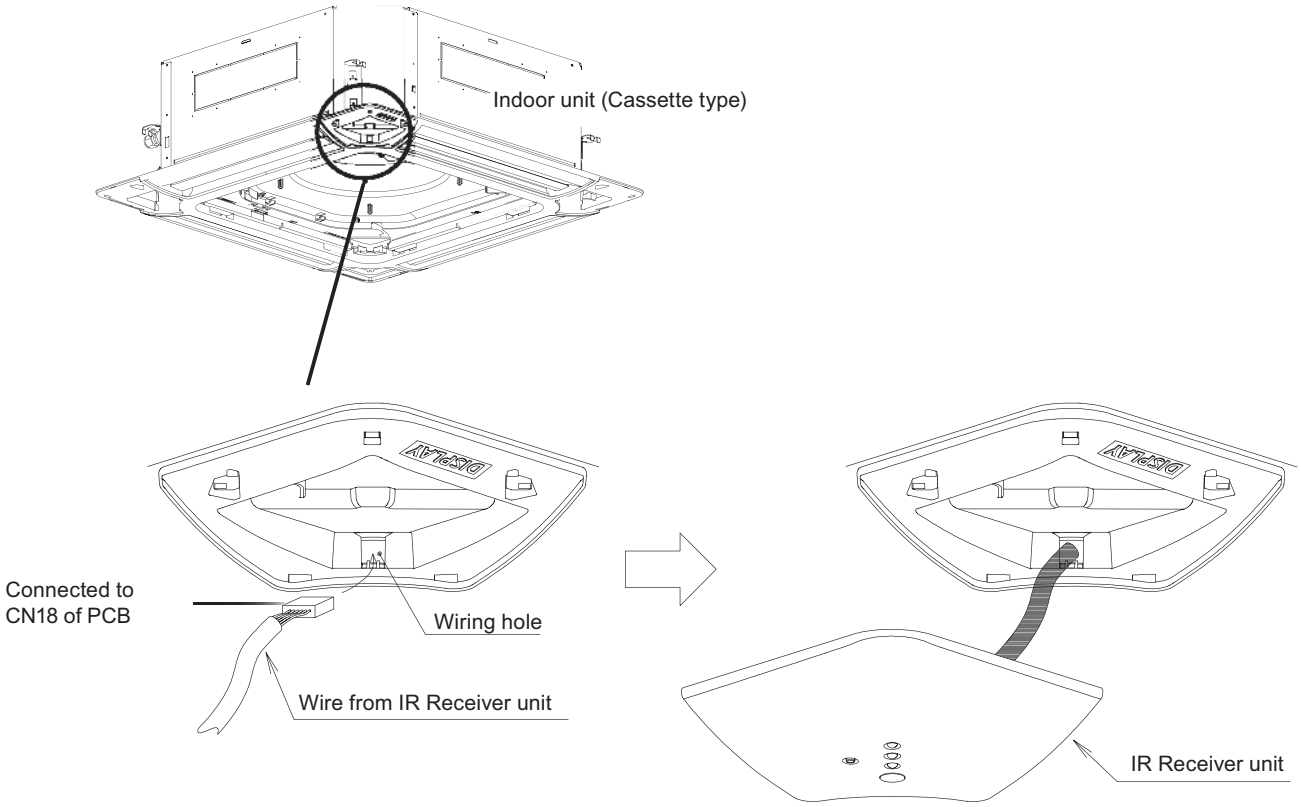

■ Dimensions

Unit: mm

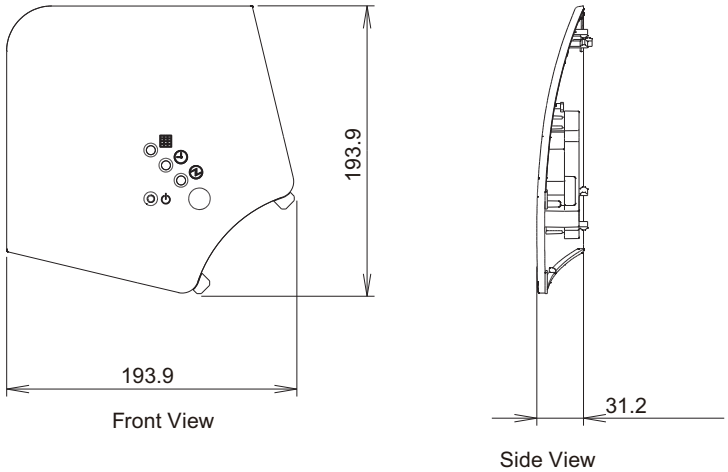

■ Specifications

Dimensions (H × W × D)	mm	193.9 × 193.9 × 31.2
Weight	g	140

2-18. IR receiver unit (For circular flow cassette type: UTY-LBHXD)

Cassette type indoor unit can be controlled with Wireless remote controller if the IR receiver unit is used.

■ Accessory

Name and shape	Q'ty	Application
Strap	1	For preventing receiver from falling down
Cable tie	2	For electrical wiring
Installation manual	1	

■ Overview

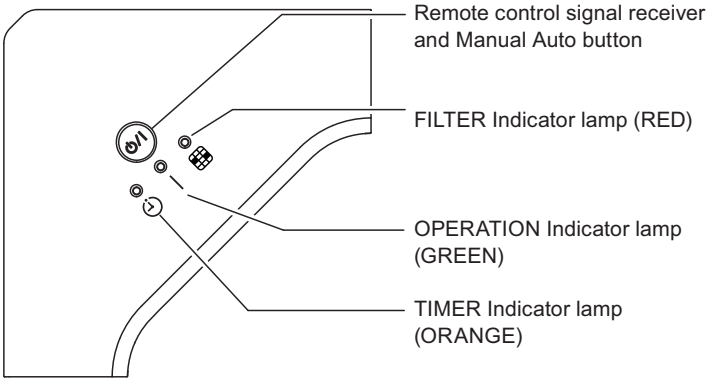

■ Electrical wiring

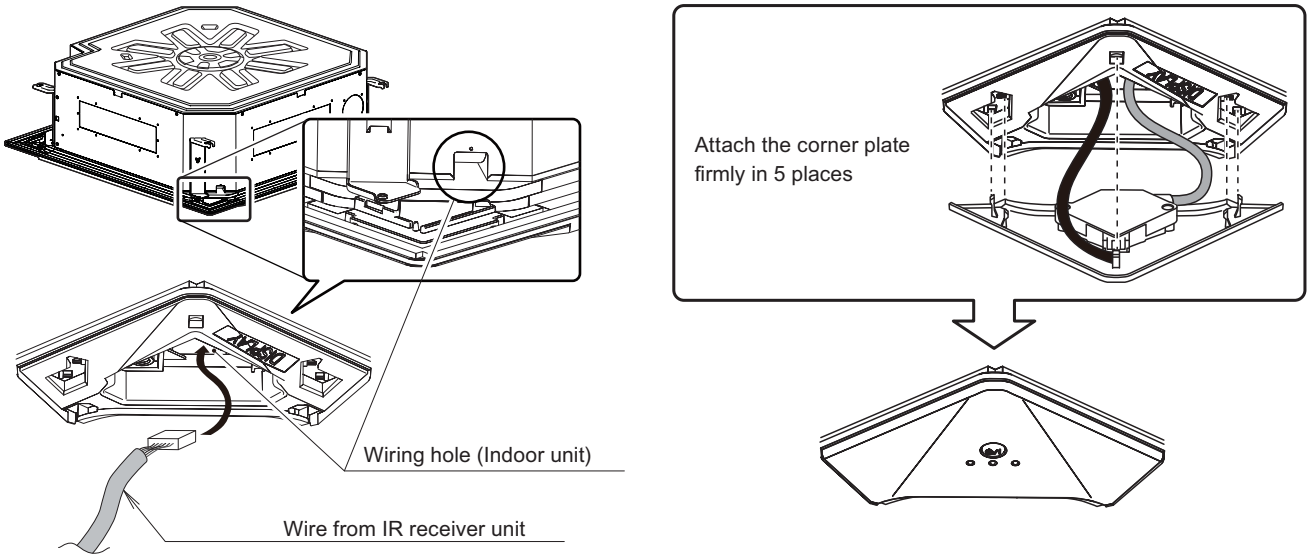

CONTROL SYSTEM

■ Dimensions

Unit: mm

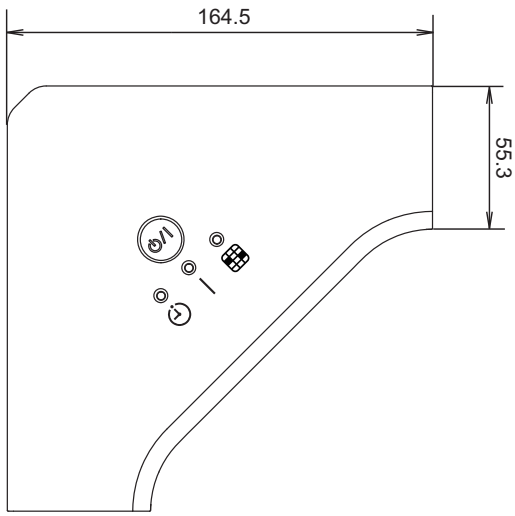

Front View

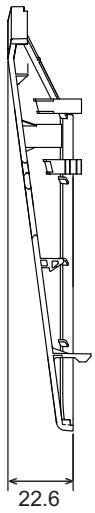

Side View

■ Specifications

Dimensions (H × W × D)	mm	164.5 × 164.5 × 22.6
Weight	g	110

CONTROL SYSTEM

2-19. Human sensor kit (For circular flow cassette type: UTY-SHZXC)

Motion sensor save operation catches the movements of people for wide area and operation stop is also judged automatically.

■ Accessory

Name and shape	Q'ty	Application
Cable tie	3	For binding wires
Strap	1	For preventing human sensor from falling down
Insulation	3	To fasten the human sensor wire
Installation manual	1	
Operation manual	1	

CONTROL SYSTEM

■ Electrical wiring

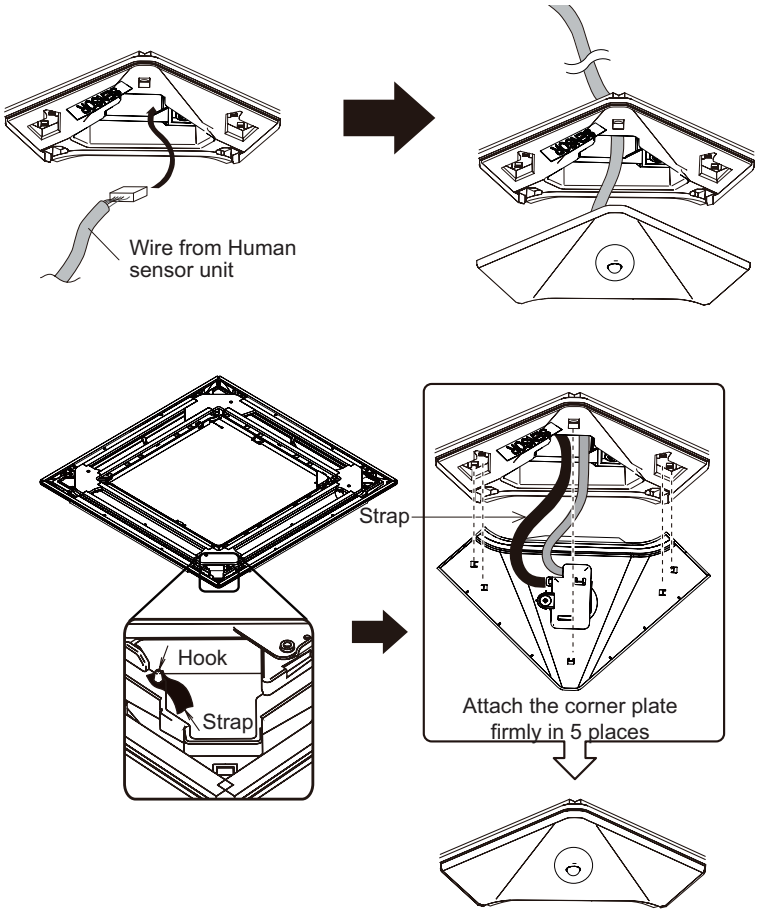

■ Dimensions

Unit: mm

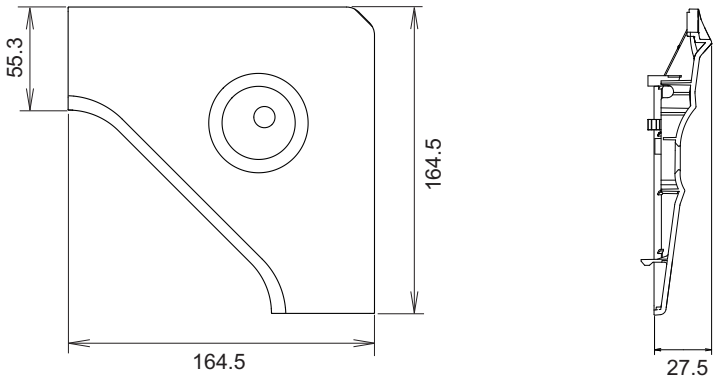

Front View

Side View

■ Specifications

Dimensions (H × W × D)	mm	164.5 × 164.5 × 27.5
Weight	g	110

2-20. Remote sensor unit (UTY-XSZX)

The remote sensor unit allows for flexible temperature sensing for optimum temperature control.

■ Accessory

Name and shape	Q'ty	Name and shape	Q'ty
Cable (10 m)	1	Installation manual	1
Screw (M4 × 10 mm)	2	Cord clamp	1
Screw (M4 × 16 mm)	2		

■ Electrical wiring

- Remove the screws from the remote sensor unit, and remove the cover.
- Connect the cable to the remote sensor unit as shown below.
- Ensure that the wires do not contact each other.

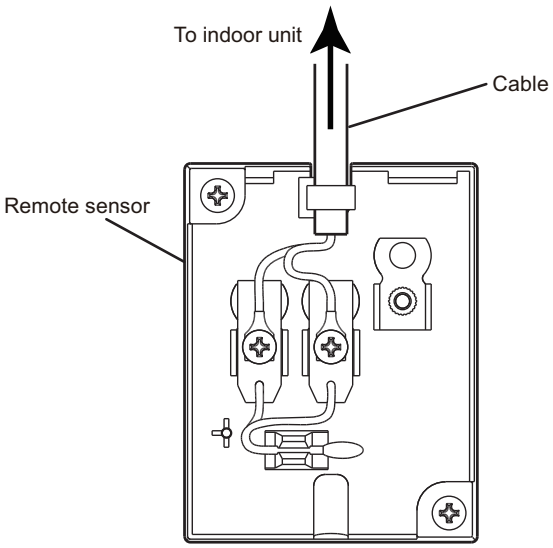

■ Dimensions

Unit: mm

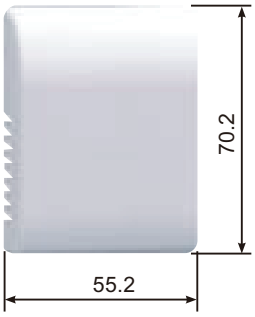

CONTROL SYSTEM

■ Installation

Unit: mm

- **When the cable is attached to the wall:**
  - Remove the material covering the wiring penetration (thin material) in the cover of the sensor unit with a pair of cutters. The cable passes through this hole.
  - Attach the remote sensor unit on the wall using the screws.

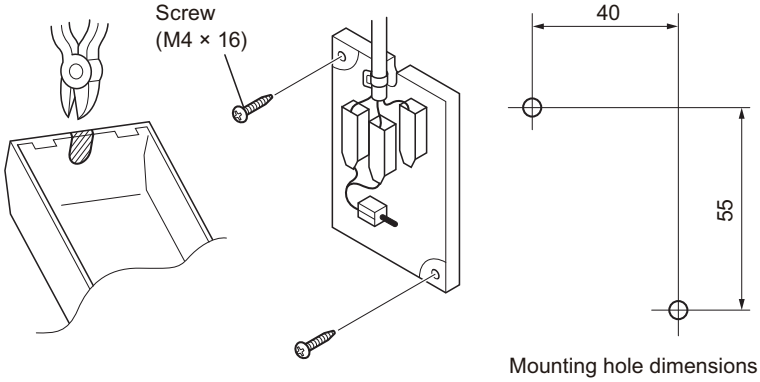

  - Fit the cover on the remote sensor unit and screw it in place.

- **When the cable is buried in the wall:**
  - Remove the material (thinner than the surrounding material) in the wiring hole on the remote sensor unit using a pair of cutters.
  - Drill a hole in the wall for the cable.
  - Seal the area around the cable penetration with putty.

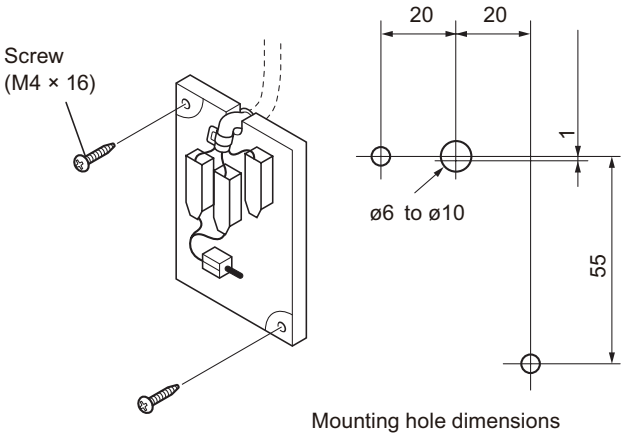

  - Fit the cover on the remote sensor unit and screw it in place.

■ Specifications

Dimensions (H × W × D)	mm	70.2 × 55.2 × 18

CONTROL SYSTEM

2-21. Group control method

■ Remote controller group

Wired, Simple, and Wireless remote controllers can be used simultaneously in the following combinations.

Examples of combination for remote controller group:

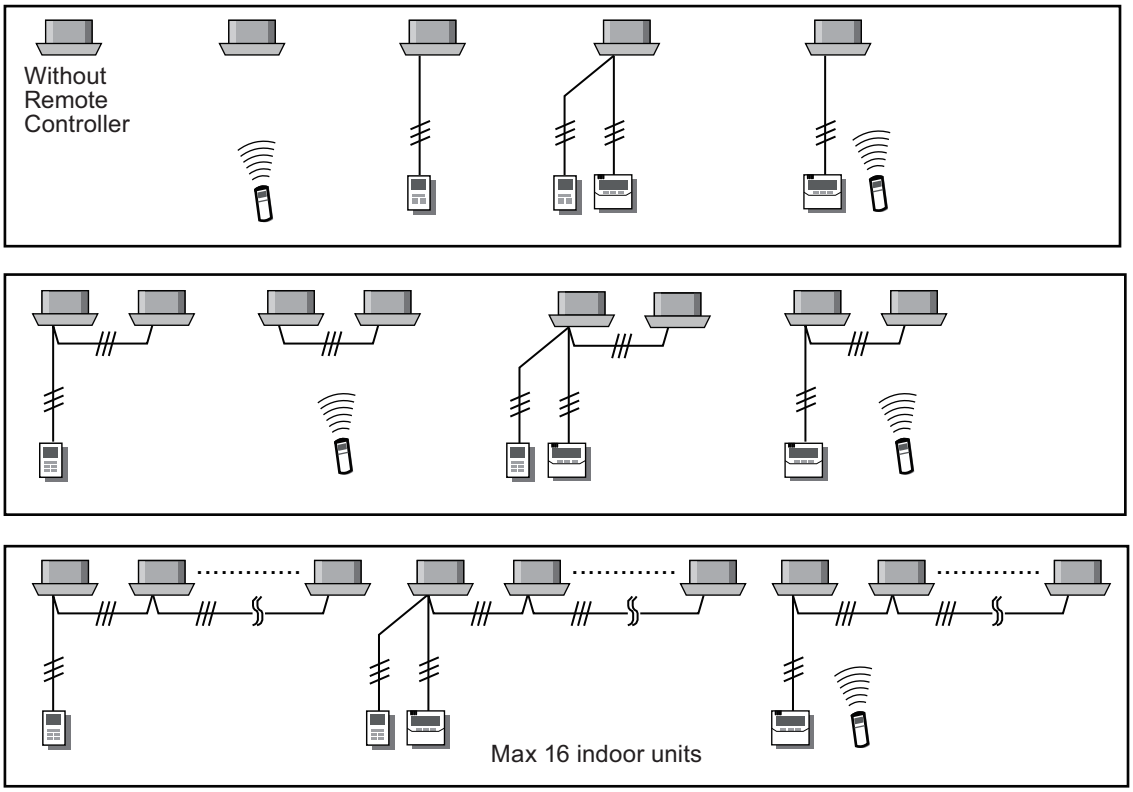

Connectable indoor unit number: 1 to 16

Connectable remote controller number: 0 to 2

NOTES:

- Indoor unit in the same remote controller group will be same operation.
- Remote controller group spanning refrigerant system is not allowed.
- When using 2 remote controllers:
  - Last command is priority. (Operation mode might be fixed by system operation.)
  - Timer setting function become disable from slave remote controller or wireless remote controller.
- When the airflow direction is set with combination use of wireless remote controller and wired remote controller in the same remote controller group, airflow direction setting shown on the remote controllers may differ from actual louver position of the indoor unit.
- When using a wireless remote controller in connection with a group assignment, the airflow direction of the indoor units may not match.

CONTROL SYSTEM

■ Group

This function is used when operating a multiple number of remote controller group at a time from System controller, Touch panel controller, or Central remote controller.

Example:

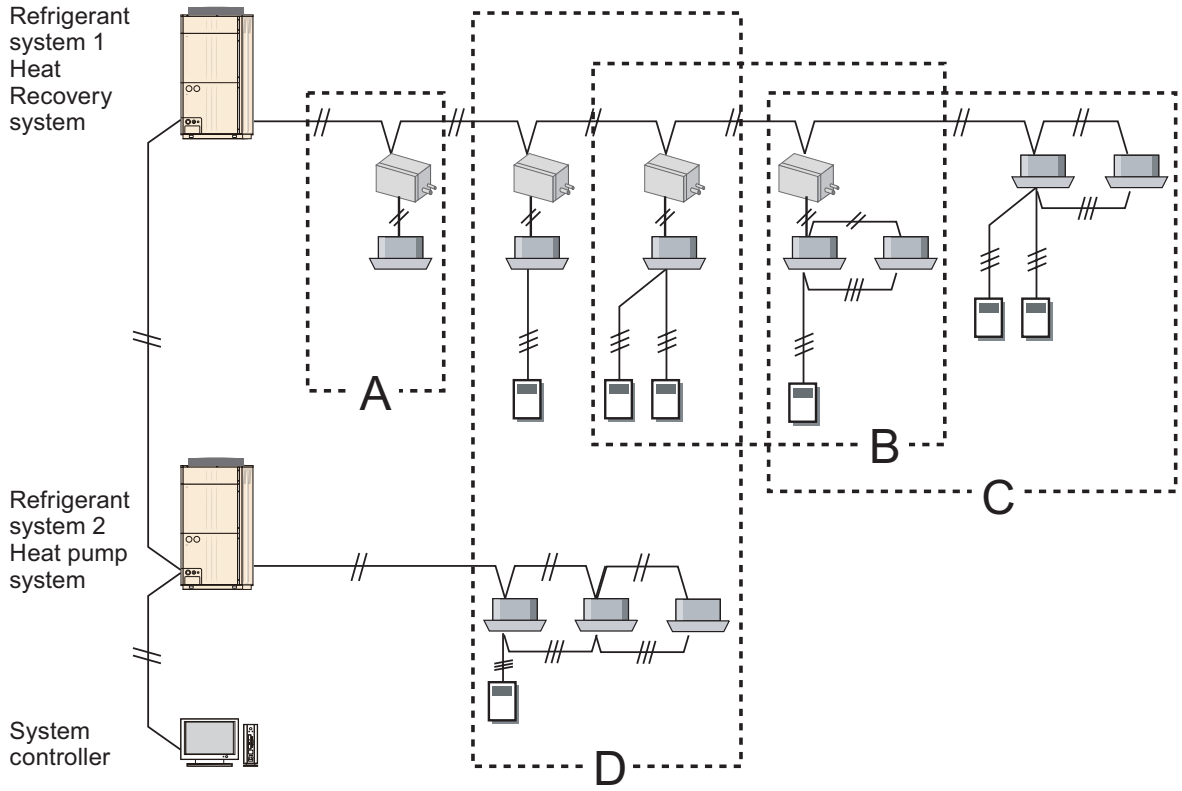

Group A: “Group” is possible with only one indoor unit.
Group B: “Group” is possible with spanning the RB groups.
Group C: “Group” is possible with spanning the RB group and indoor unit of cooling only type.
Group D: “Group” is possible with spanning the refrigerant systems.

NOTE: The contents of setting may not be reflected by operation status. (B, C, D group)

CONTROL SYSTEM

2-22. Comparison table of controllers

• Central control

Item		System controller	System controller lite	Touch panel controller	Central remote controller	Group remote controller
Model		**UTY-APGXZ1**	**UTY-ALGXZ1**	**UTY-DTG∗Z1**	**UTY-DCG∗Z∗**	**UTY-CGG∗**
Max. controllable remote controller groups		1,600	400	400	100	8
Max controllable indoor units		1,600	400	400	100	*1
Max controllable groups		1,600	400	400	50	—
Air conditioning control function						
On/Off		●	●	●	●	●
Operation mode setting		●	●	●	●	●
Fan speed setting		●	●	●	●	●
Room temp. setting		●	●	●	●	●
Room temp. set point limitation		●	●	●	●	—
Test operation		—	—	●	—	—
Up/Down air direction flap setting		●	●	●	●	—
Right/Left air direction flap setting		●	●	●	●	—
Individual louver control		—	—	●	●	—
Group setting		●	●	●	●	—
RC prohibition		●	●	●	●	—
Anti-freeze setting		●	●	●	●	—
Set temp. auto return		—	—	●	—	●
Economy mode setting		●	●	●	●	—
Human sensor control		●	●	●	●*2	—
Display						
Failure		●	●	●	●	●
Defrosting		●	●	●	●	—
Current time		●	●	●	●	●
Day of week		●	●	●	●	●
RC prohibition		●	●	●	●	●
Cooling/Heating priority		●	●	●	●	●
Address display		●	●	●	●	●
Room temp.		●*3	●*3	●*3	●*3	—
Multi language		●	●	●	●	—
Summer time		●	●	●	●	—
Name registration		●	●	●	●	—
Backlight		—	—	●	●	—
2D floor layout/3D floor layout		●	—	—	—	—
Refrigerant leakage detection function		●	●	●	●	—
Timer						
Schedule timer	Period	Year	Year	Year	Week	Week
	On/Off, Temp., Mode, Times per day	144	144	20	20	4
On/Off timer		—	—	—	—	—
Sleep timer		—	—	—	—	—
Program timer		—	—	—	—	—
Auto off timer		—	—	—	●	—
Day off timer		●	●	●	●	●
Min. unit of timer setting (Minutes)		10	10	10	10	10
Control						
Status monitoring system		●	●	●	●	—
Electricity charge calculation		●	○	○	—	—
Error history		●	●	●	●	●
Emergency stop		—	—	●*4	●*3	—
Remote management		●	○	●	●	—
Energy saving management		○	○	—	—	—
E-mail notification for malfunction		●	●	●	●	—
Key lock		● Password setting	● Password setting	● Password setting	● Password setting	● Child lock
Low noise mode		—	—	●	—	—

NOTES:

- *1: Up to 2 refrigerant systems.
- *2: Available only when using version 2 or later.
- *3: Available only when using wired remote controller.
- *4: Available only through external input control.
- ●: Supported, ○: Optional function, —: Not supported yet

CONTROL SYSTEM

CONTROL SYSTEM

• Individual control

Item	Wired remote controller (Touch panel)	Wired remote controller	Wired remote controller	Wired remote controller	Simple remote controller	Simple remote controller*1	Wireless remote controller
Model	**UTY-RNR∗Z∗**	**UTY-RLR∗**	**UTY-RCR∗Z1**	**UTY-RNK∗**	**UTY-RSR∗ (UTY-RSK∗)**	**UTY-RHR∗ (UTY-RHK∗)**	**UTY-LNH∗**
Max. controllable remote controller groups	1	1	—	1	1	1	1
Max controllable indoor units	16	16	1	16	16	16	16
Max controllable groups	—	—	—	—	—	—	—
Air conditioning control function							
On/Off	●	●	●	●	●	●	●
Operation mode setting	●	●	●	●	●	—	●
Fan speed setting	●	●	●	●	●	●	●
Comfort airflow	●*2	—	● (—)	—	—	—	—
Room temp. setting	●	●	●	●	●	●	●
Room temp. set point limitation	●	●	—	—	● (—)	● (—)	—
Test operation	●	●	●	●	●	● (—)	●
Up/Down air direction flap setting*3	●	●	●	●	● (—)	● (—)	●
Right/Left air direction flap setting*3	●	●	● (—)	●	—	—	●
Individual louver control	●	—	—	—	—	—	—
Group setting	—	—	—	—	—	—	—
RC prohibition	—	—	—	—	—	—	—
Anti-freeze setting	●	—	—	—	—	—	—
Set temp. auto return	●	●	—	—	—	—	—
Economy mode setting	●	●	—	●	—	—	●
Human sensor control	●	—	—	—	—	—	—
Lead lag setting	●*4	—	—	—	—	—	—
Display							
Failure	●	●	●	●	●	●	—
Defrosting	●	●	—	●	●	●	—
Current time	●	●	—	●	—	—	●
Day of week	●	●	—	●	—	—	—
RC prohibition	●	●	●	●	●	●	—
Cooling/Heating priority	●	●	●	●	●	●	—
Address display	●	●	●	●	●	●	—
Room temp.	●*5	—	●	—	● (—)	● (—)	—
Multi language	●	—	—	—	—	—	—
Summer time	●	●	—	—	—	—	—
Name registration	●	—	—	—	—	—	—
Backlight	●	—	●	—	●	●	—
2D floor layout/3D floor layout	—	—	—	—	—	—	—
Refrigerant leakage detection function	—	—	—	—	—	—	—
Display sensor values	●*4	—	—	—	—	—	—
Timer							
Schedule timer – Period	Week	Week	—	Week	—	—	—
Schedule timer – On/Off, Temp., Mode, Times per day	8	8	—	4	—	—	—
On/Off timer	●	●	● (Off only)	●	—	—	●
Sleep timer	—	—	—	—	—	—	●
Program timer	—	—	—	—	—	—	●
Auto off timer	●	●	—	—	—	—	—
Day off timer	●	●	—	●	—	—	—
Min. unit of timer setting (Minutes)	10 to 30	30	—	30	—	—	5
Control							
Status monitoring system	—	—	—	—	—	—	—
Electricity charge calculation	—	—	—	—	—	—	—
Error history	●	●	—	●	—	—	—
Emergency stop	—	—	—	—	—	—	—
Remote management	—	—	—	—	—	—	—
Energy saving management	—	—	—	—	—	—	—
E-mail notification for malfunction	—	—	—	—	—	—	—
Key lock	● Child lock	● Child lock Part lock	—	—	—	—	—
Low noise mode	—	—	—	—	—	—	—

NOTES:

- *1: “Operation mode” setting is not available for this model.
- *2: It is enable when UTY-RNR∗Z∗ connected to 3D flow cassette
- *3: When the airflow direction is set with combination use of wireless remote controller and wired remote controller, airflow direction setting shown on the remote controllers may differ from actual louver position of the indoor unit.
- *4: Available only for UTY-RNR∗Z∗ version 5 or later.
- *5: Room temperature correction function is available only for UTY-RNR∗Z∗ version 5 or later.
- ●: Supported, ○: Optional function, —: Not supported yet

CONTROL SYSTEM

3. Adaptor/Convertor units

RELATED LINKS

"Adapter/Converter/Maintenance tool" in Chapter 1. GENERAL INFORMATION on page 01-11

3-1. Network converter (UTY-VTGX)

- With this Network converter, single split type and multi system air conditioners can be controlled by System controller, Touch panel controller, Central remote controller in VRF network system or by Wired remote controller connected to the Network converter.
- Start/Stop, operation mode, temperature setting, fan speed, etc. can be done with these controllers.
- One Network converter can be connected and controlled up to 16 indoor units.
- One Wired remote controller is possible for one Network converter by UTY-VTGX.
- Up to 100 Network converter can be connected in one VRF network system. (One Network converter is regarded as one refrigerant system. The total refrigerant system in one VRF network system must be within 100.)

■ Accessory

Name and shape	Q'ty	Application
Cable tie	4	For mounting the remote controller cable and transmission cable
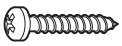 Screw (M4 × 16 mm)	3	For mounting the Network converter
Installation manual	1	

CONTROL SYSTEM

■ System diagram

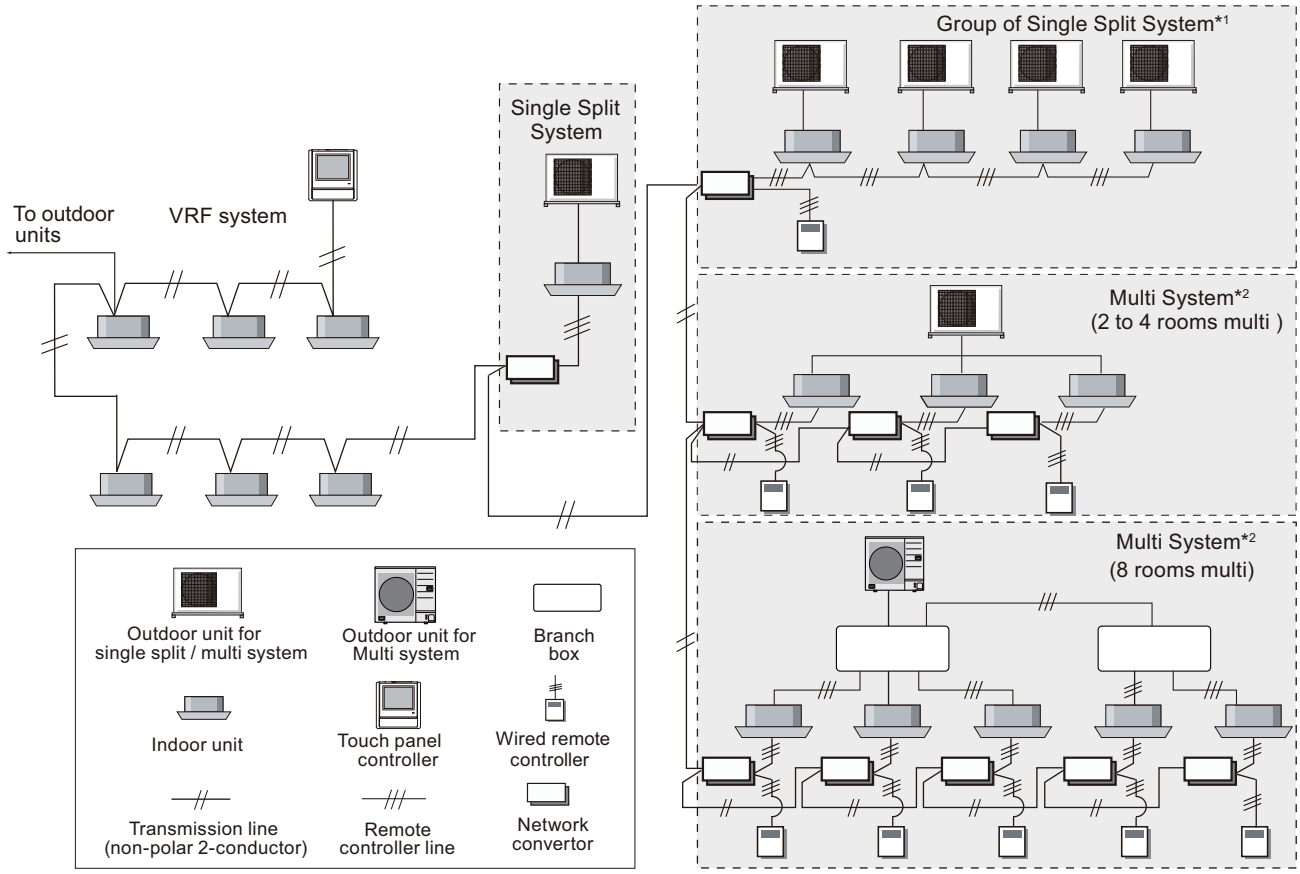

*1: All indoor units connected to a Network converter are operated under same status.

*2: Network converter is necessary for each indoor unit to control indoor unit individually.

CONTROL SYSTEM

■ Electrical wiring

- **For non-polar 2 wire**

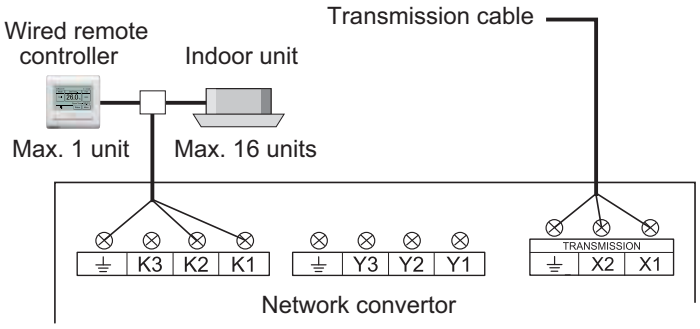

- **For polar 3 wire**

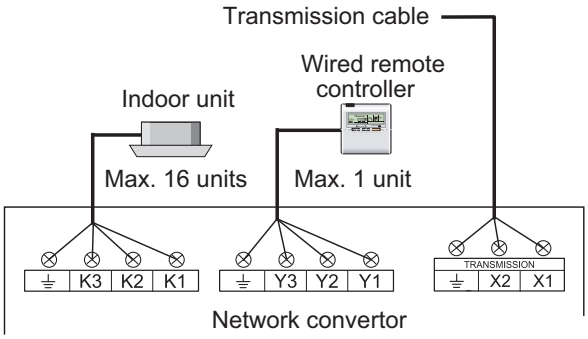

NOTES:

- Do not bind the power cable and the remote controller cable to avoid erroneous operation.
- Use shielded cable for transmission cable in accordance with the regional cable standard.
- Use sheathed PVC cable or shielded cable for remote controller cable in accordance with the regional cable standard.
- Use ground wire to ground the Network converter.

CONTROL SYSTEM

■ Limited wiring length

- **For non polar 2-wire**
  Up to 4 remote controllers can be used to operate the indoor units.

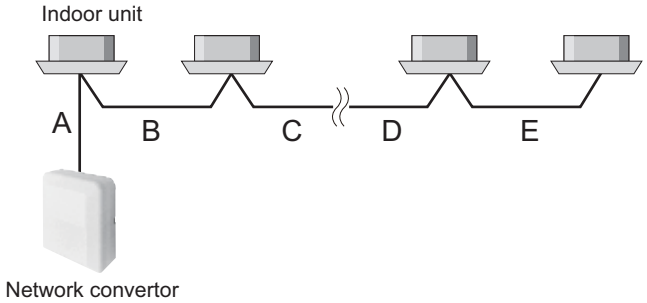

A, B, C, D, E: Remote controller cable (For details of controller cable specifications, refer to "Controller cable" in Chapter 6. SYSTEM DESIGN on page 06-66.)
A ≤ 2 m, A + B + C + D + E ≤ 500 m

- **For polar 3-wire**

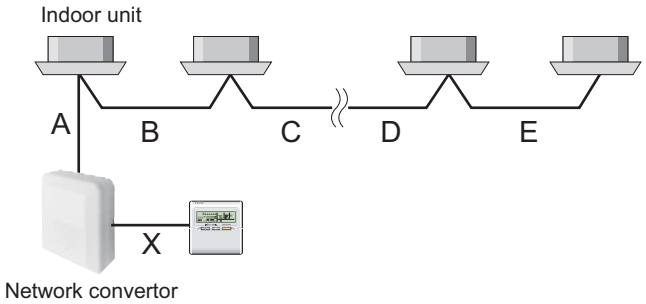

A, B, C, D, E, X: Remote controller cable (For details of controller cable specifications, refer to "Controller cable" in Chapter 6. SYSTEM DESIGN on page 06-66.)
A ≤ 2 m, A + B + C + D + E ≤ 100 m and X ≤ 100 m

CONTROL SYSTEM

■ Connectable remote controllers

3 types of wired remote controller shown in the table below can be connected to this product.
This product is connectable to indoor units that following wired remote controllers can be connected.

Model name	RC number	Type
UTY-R∗R∗Z∗	AR-WEC∗∗ AR-WED∗∗ AR-WEE∗∗ AR-WEF∗∗ AR-WFA∗∗ AR-WFB∗∗ AR-WFC∗∗ AR-WFD∗∗ AR-WGA∗∗ AR-WGB∗∗	Non polar 2-wire
UTB-YUD	AR-6TC∗∗	Polar 3-wire
UTY-R∗N∗M UTY-R∗K∗	AR-WAE∗∗ AR-WAF∗∗ AR-WAG∗∗ AR-WBE∗∗ AR-WBF∗∗ AR-WBG∗∗ AR-WDC∗∗ AR-WDD∗∗	

∗: Numerical character or alphabetical character

■ Functions

Operation	Non polar 2-wire	Polar 3-wire
Operation of louver from VRF	○	×
Operation of louver from wired remote controller	○	○
Restriction of wireless remote controller from central control	○	×
Restriction of wired remote controller from central control	○	○
Anti-freeze	×	×
Setting high and low temperature limit	○	×
Indoor unit rotation	×	×
Turning off indoor unit external thermostat	×	×
Outdoor unit forced stop	×	×
Outdoor unit capacity save	×	×
Outdoor unit low noise	×	×
Electricity distribution	×	×
Display model name	×	×
System time	○	×
Remote setting	×	×
Local setting by the wired remote controller	○	×

CONTROL SYSTEM

■ Dimensions

Unit: mm

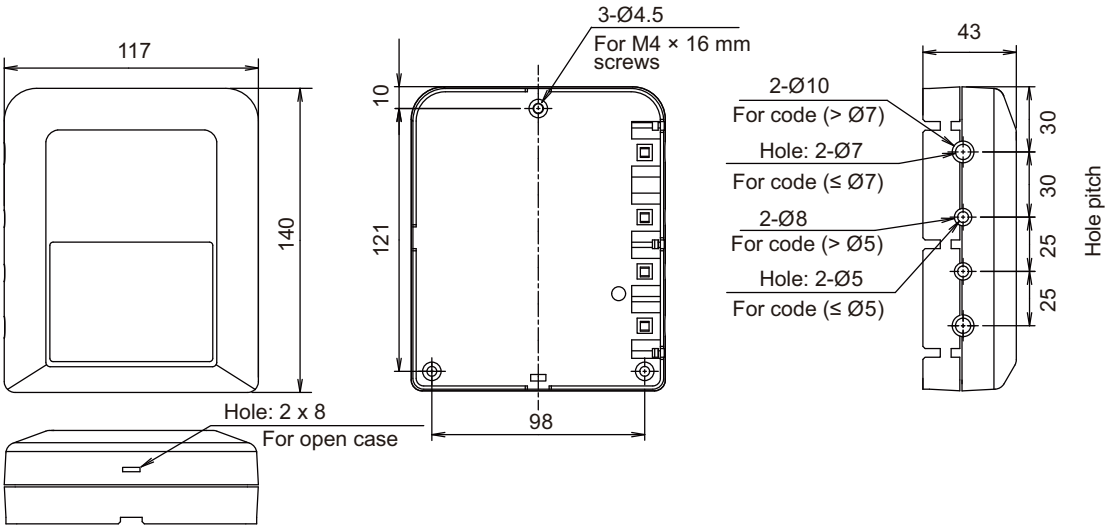

■ Specifications

Input power		W	2
Temperature	Operating	°C	0 to 46
	Packaged	°C	-10 to 60
Humidity	Packaged	%	0 to 95 (RH) No condensation
Dimensions (H × W × D)		mm	140 × 117 × 43
Weight		g	250

● Wiring specifications

Use	Cable size	Wire type	Remarks
Transmission cable	0.33 mm^2 (22 AWG)	LEVEL 4 (NEMA) Non-polar 2 core, twisted pair solid core shielded	LonWorks compatible cable
Remote controller cable (2-wire type)	0.33 to 1.25 mm^2 (22 to 16 AWG)	Non-polar 2 core	Use sheathed PVC cable or shielded cable in accordance with the regional cable standard.
Remote controller cable (3-wire type)	0.33 mm^2 (22 AWG)	Polar 3 core	

CONTROL SYSTEM

3-2. Network converter (UTY-VTGXV)

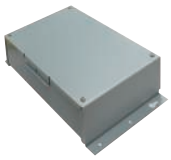

- With this Network converter, single split type and multi system air conditioners can be controlled by System controller, Touch panel controller, Central remote controller in VRF network system or by Wired remote controller connected to the Network converter.
- Start/Stop, operation mode, temperature setting, fan speed, etc. can be done with these controllers.
- One Network converter can be connected and controlled up to 16 indoor units.
- Two Wired remote controllers are possible for one Network converter by UTY-VTGXV.
- Up to 100 Network converters can be connected in one VRF network system. (One Network converter is regarded as one refrigerant system. Total refrigerant systems in one VRF network system must be within 100.)

■ Accessory

Name and shape	Q'ty	Application
Cable tie	7	For mounting the remote controller cable and transmission cable
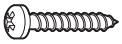 Screw (M4 × 16 mm)	4	For mounting the Network converter
Installation manual	1	

CONTROL SYSTEM

■ System diagram

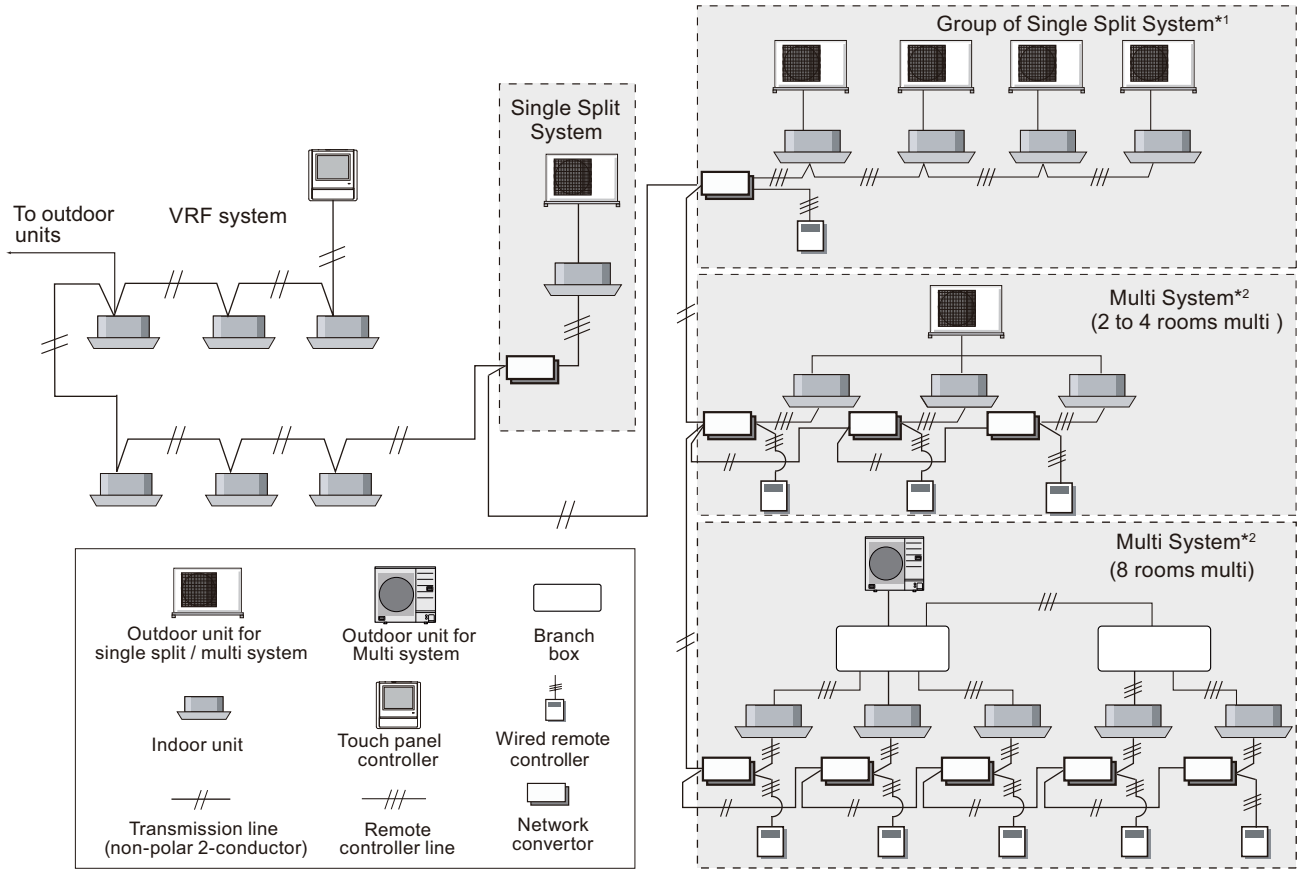

*1: All indoor units connected to a Network converter are operated under same status.

*2: Network converter is necessary for each indoor unit to control indoor unit individually.

CONTROL SYSTEM

■ Electrical wiring

- **For non-polar 2 wire**

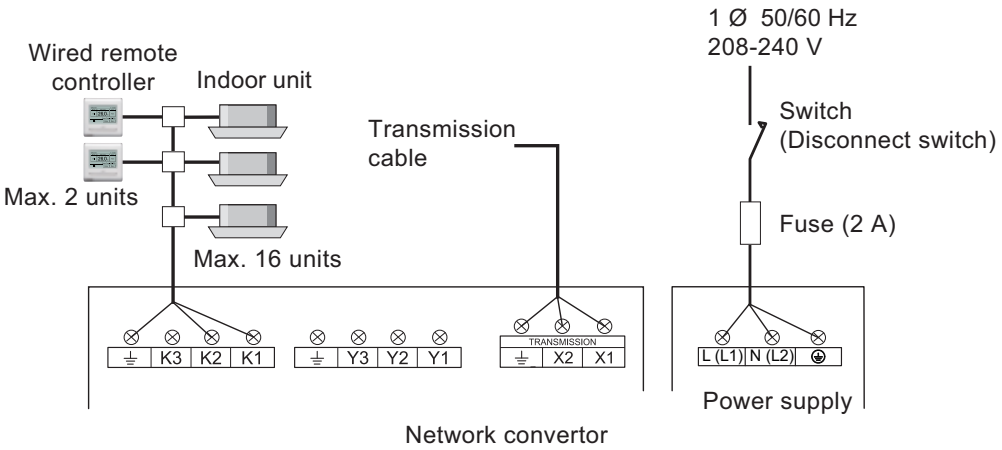

- **For polar 3 wire**

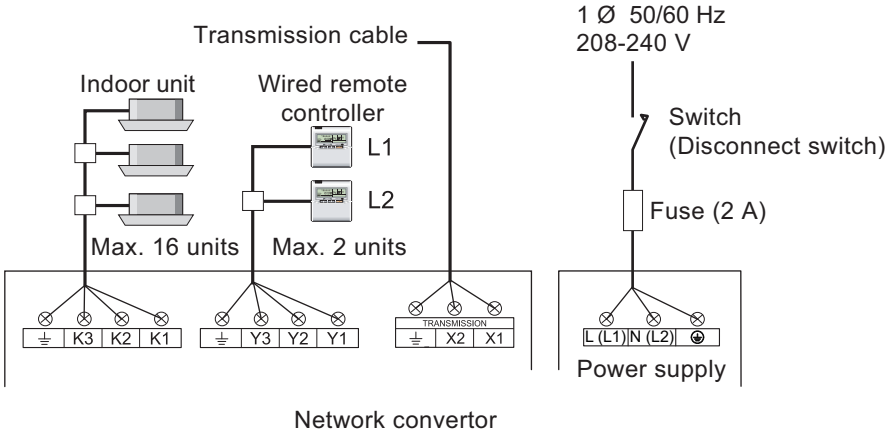

NOTES:

- Do not bind the power cable and the remote controller cable to avoid erroneous operation.
- Use shielded cable for transmission cable in accordance with the regional cable standard.
- Use sheathed PVC cable or shielded cable for remote controller cable in accordance with the regional cable standard.
- Use ground wire to ground the Network converter.

CONTROL SYSTEM

■ Limited wiring length

- **For non polar 2-wire**
  Up to 4 remote controllers can be used to operate the indoor units.

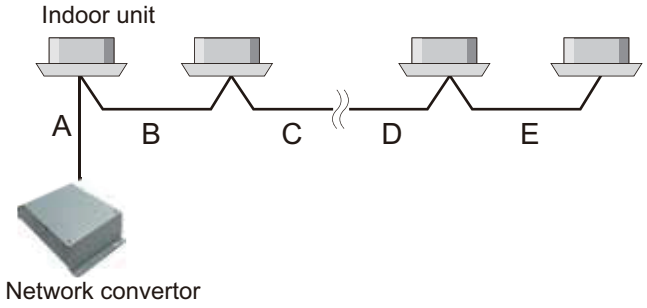

A, B, C, D, E: Remote controller cable (For details of controller cable specifications, refer to "Controller cable" in Chapter 6. SYSTEM DESIGN on page 06-66.)

A ≤ 2 m, A + B + C + D + E ≤ 500 m

- **For polar 3-wire**

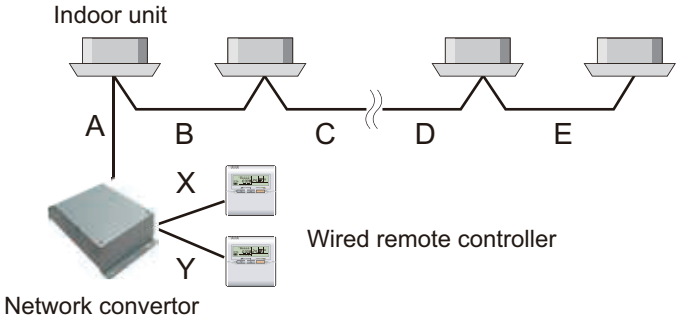

A, B, C, D, E, X, Y: Remote controller cable (For details of controller cable specifications, refer to "Controller cable" in Chapter 6. SYSTEM DESIGN on page 06-66.)

A ≤ 2 m, A + B + C + D + E ≤ 100 m and X + Y ≤ 100 m

CONTROL SYSTEM

■ Connectable remote controllers

3 types of wired remote controller shown in the table below can be connected to this product.
This product is connectable to indoor units that following wired remote controllers can be connected.

Model name	RC number	Type
UTY-R∗R∗Z∗	AR-WEC∗∗ AR-WED∗∗ AR-WEE∗∗ AR-WEF∗∗ AR-WFA∗∗ AR-WFB∗∗ AR-WFC∗∗ AR-WFD∗∗ AR-WGA∗∗ AR-WGB∗∗	Non polar 2-wire
UTB-YUD	AR-6TC∗∗	Polar 3-wire
UTY-R∗N∗M UTY-R∗K∗	AR-WAE∗∗ AR-WAF∗∗ AR-WAG∗∗ AR-WBE∗∗ AR-WBF∗∗ AR-WBG∗∗ AR-WDC∗∗ AR-WDD∗∗	

∗: Numerical character or alphabetical character

■ Functions

Operation	Non polar 2-wire	Polar 3-wire
Operation of louver from VRF	○	×
Operation of louver from wired remote controller	○	○
Restriction of wireless remote controller from central control	○	×
Restriction of wired remote controller from central control	○	○
Anti-freeze	×	×
Setting high and low temperature limit	○	×
Indoor unit rotation	×	×
Turning off indoor unit external thermostat	×	×
Outdoor unit forced stop	×	×
Outdoor unit capacity save	×	×
Outdoor unit low noise	×	×
Electricity distribution	×	×
Display model name	×	×
System time	○	×
Remote setting	×	×
Local setting by the wired remote controller	○	×

CONTROL SYSTEM

■ Dimensions

Unit: mm

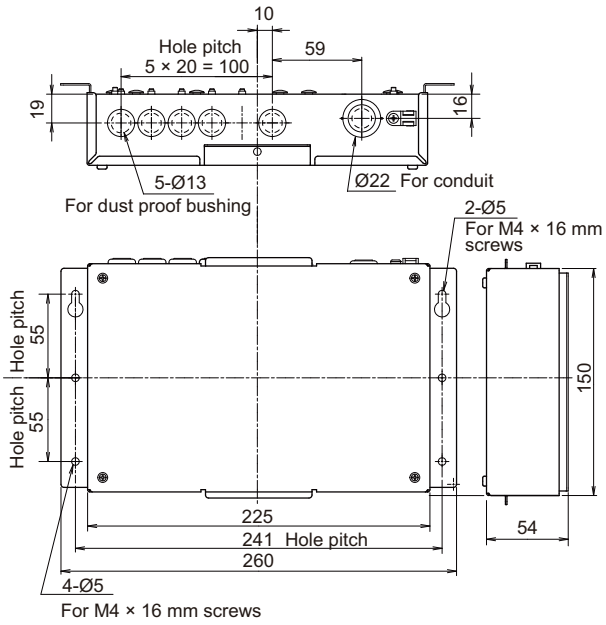

■ Specifications

Power supply		V	1 Ø AC 208—240
Power source frequency		Hz	50/60
Input power		W	3.0
Temperature	Operating	°C	0 to 46
	Packaged	°C	-10 to 60
Humidity	Packaged	%	0 to 95 (RH) No condensation
Dimensions (H × W × D)		mm	54 × 260 × 150
Weight		g	1,100
Fuse capacity		A	2

● Wiring specifications

Use	Cable size	Wire type	Remarks
Power cable (using remote control cable)	0.5 to 1.25 mm^2 (20 to 16 AWG)	60245 IEC 57 or equivalent	1 Ø AC 208—240 V 50/60 Hz, 2 wire + ground (Always ground the unit)
Transmission cable	0.33 mm^2 (22 AWG)	LEVEL 4 (NEMA) Non-polar 2 core, twisted pair solid core shielded	LonWorks compatible cable
Remote controller cable (2-wire type)	0.33 to 1.25 mm^2 (22 to 16 AWG)	Non-polar 2 core	Use sheathed PVC cable or shielded cable in accordance with the regional cable standard.
Remote controller cable (3-wire type)	0.33 mm^2 (22 AWG)	Polar 3 core	

CONTROL SYSTEM

3-3. Network converter (UTY-VGGXZ1)

- **For connecting single split type system (DIP switch setting is necessary.)**
  - With this Network converter, single split type and multi system air conditioners can be controlled by System controller, Touch panel controller, Central remote controller in VRF network system or by Wired remote controller connected to the Network converter.
  - Start/Stop, operation mode, temperature setting, fan speed, etc. can be done with these controllers.
  - One Network converter can be connected and controlled up to 16 indoor units.
  - Two Wired remote controllers are possible for one Network converter.
  - Up to 100 Network converters can be connected in one VRF network system. (One Network converter is regarded as one refrigerant system. Total refrigerant systems in one VRF network system must be within 100.)

- **For connecting Group remote controllers**
  - Up to a total of 16 Network converters, Central remote controller and Touch panel controller can be connected in 1 VRF network system.
  - 4 Group remote controllers can be connected to 1 Network converter.
  - 2 refrigerant systems can be covered by 1 Network converter.

■ Accessory

Name and shape	Q'ty	Application
Cable tie	4	For mounting the power supply cable, remote controller cable, and transmission cable
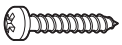 Screw (M4 × 20 mm)	4	For mounting the Network converter
Dust proof bushing	1	For connecting the power supply cable
Installation manual	1	

CONTROL SYSTEM

■ System diagram

- For connecting single split type system

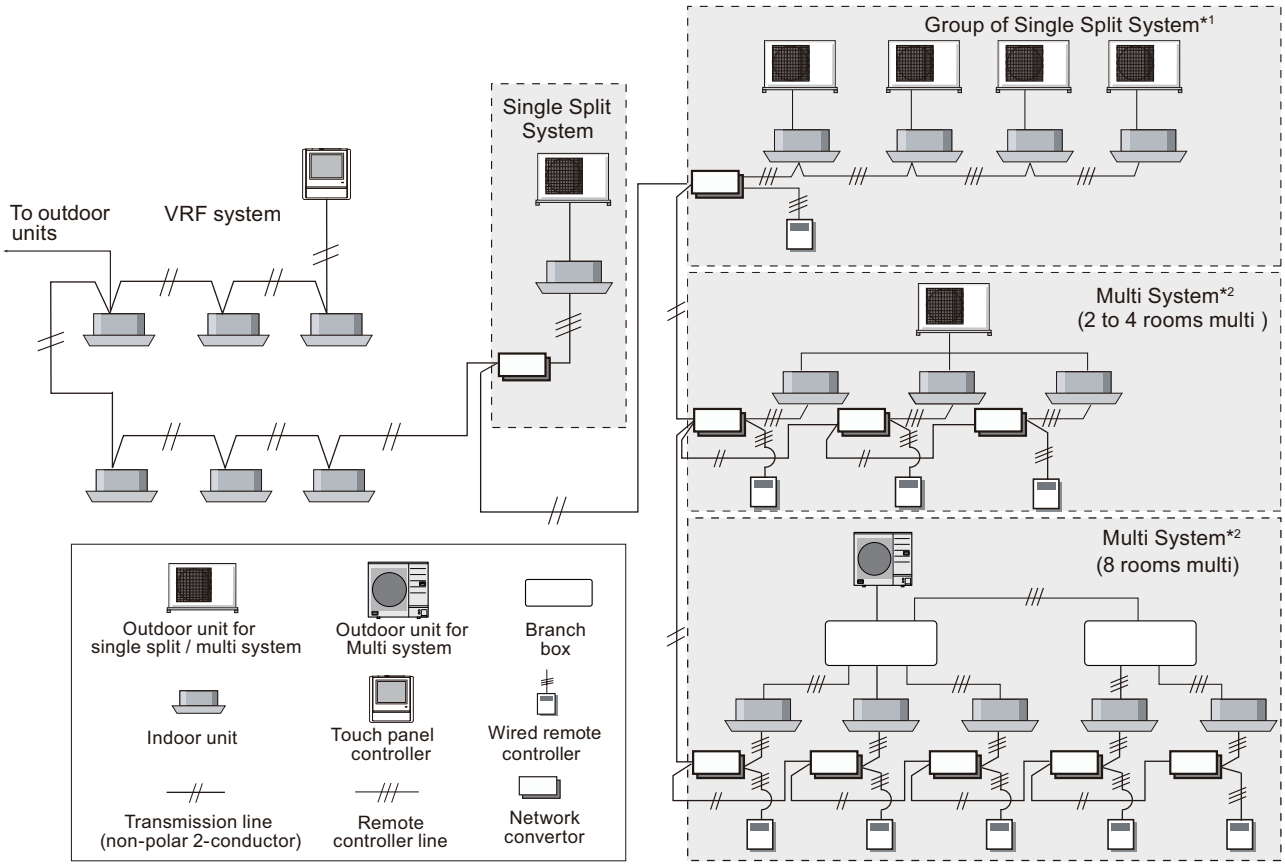

*1: All indoor units connected to a Network converter are operated under same status.

*2: Network converter is necessary for each indoor unit to control indoor unit individually.

- For connecting Group remote controllers

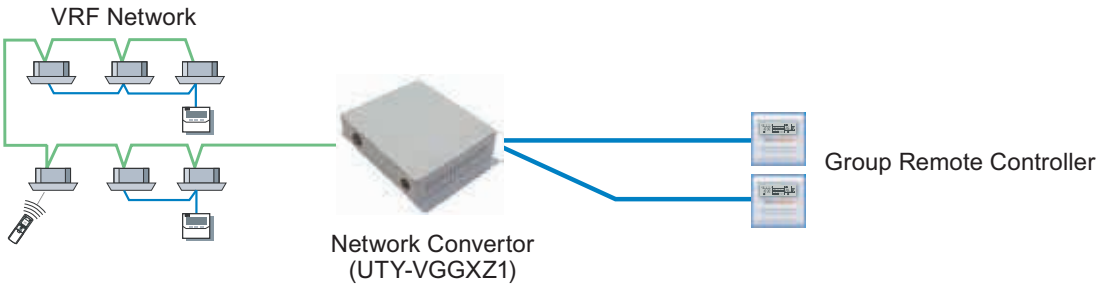

CONTROL SYSTEM

■ Electrical wiring

- **For connecting single split type system**

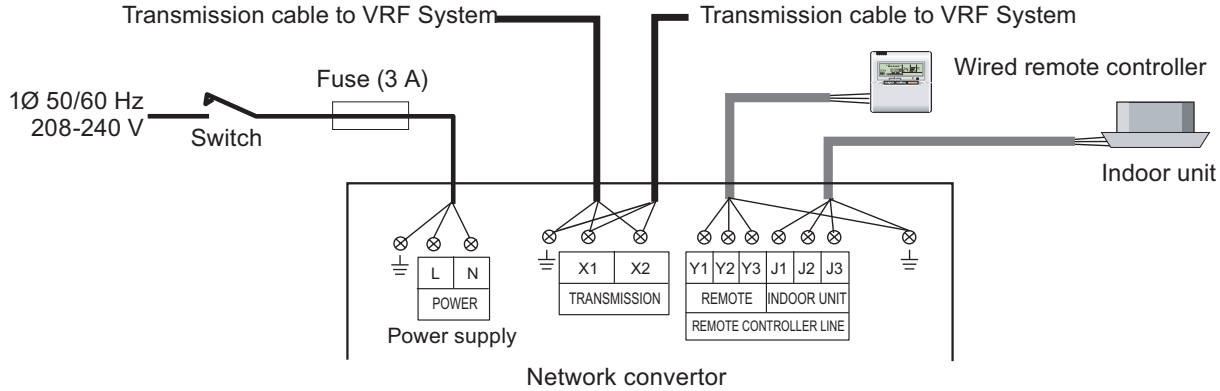

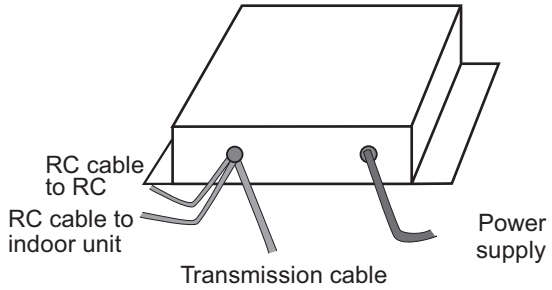

NOTES:

- Do not bind the power cable and the remote controller cable to avoid erroneous operation.
- Use shielded cable for transmission line and remote controller line. The shielded metal should be grounded.
- Use ground wire to ground the Network converter.

- **For connecting Group remote controllers**

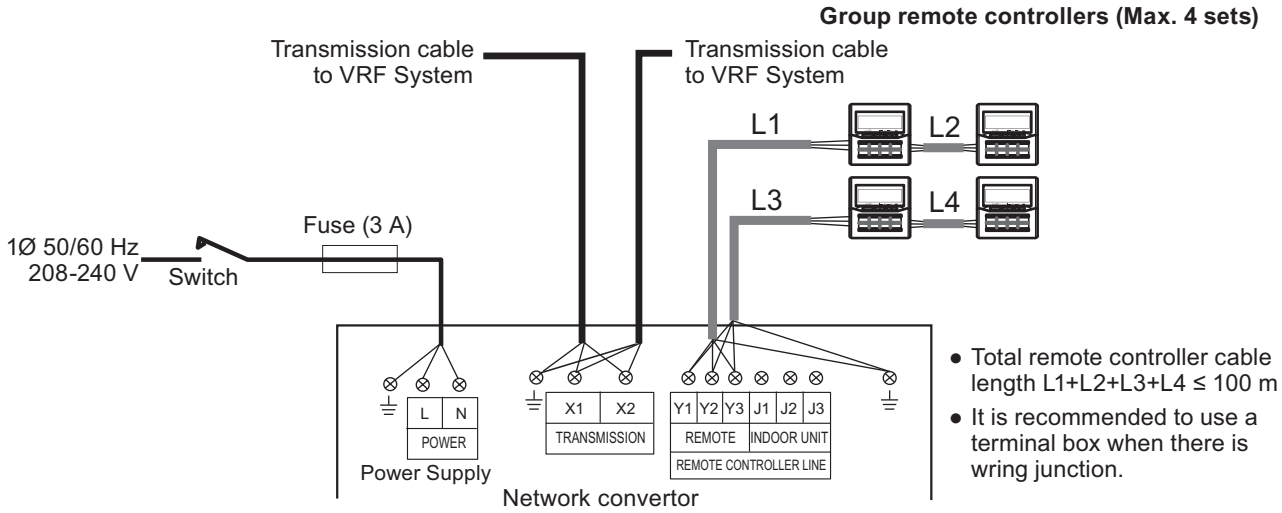

or

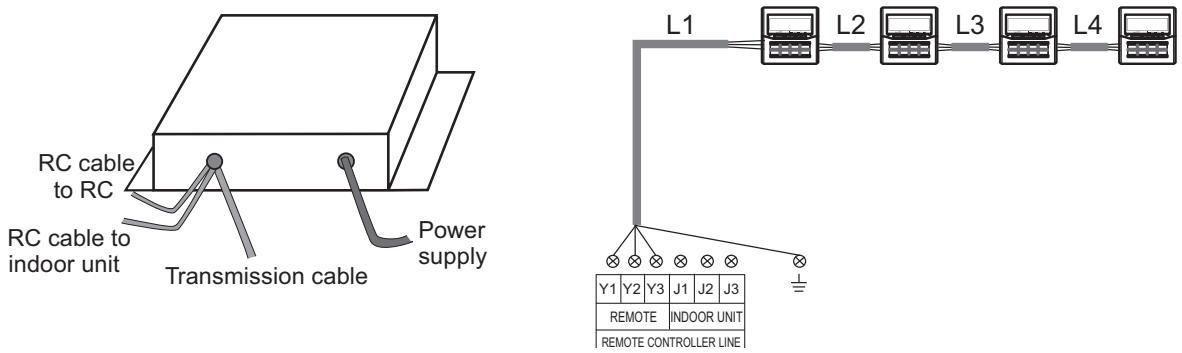

CONTROL SYSTEM

■ Applicable models

● Connectable remote controllers

In the case of connecting single split type system, Wireless remote controller cannot be connected to this product.

3 types of wired remote controller shown in the table below can be connected to this product.

Model name	RC number
UTB-YUB	AR-3TA∗∗
UTB-YUD	AR-6TC∗∗
UTY-R∗N∗M	AR-WAE∗∗

∗: Numerical character or alphabetical character

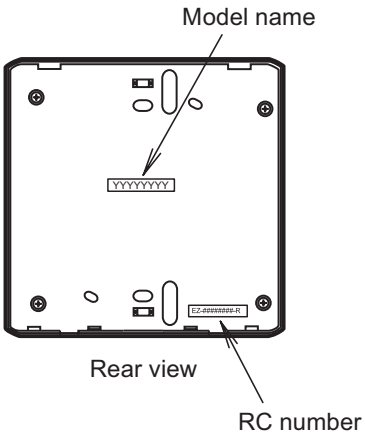

● Connectable indoor units

This product is connectable to indoor units that following wired remote controllers (accessories or optional parts) can be connected.

RC number		
AR-3TA∗∗	AR-6TC∗∗	AR-WAE∗∗
EZ-099DHSE-R	EZ-000DHSE-R	EZ-0001HSE-R
EZ-000GHSE-R	EZ-00004HSE-R	EZ-00005HSE-R
EZ-0015HSE-R	EZ-0019HSE-R	EZ-099DHSEFR
EZ-0001HSEFR	EZ-000DHSEFR	EZ-000GHSEFR
EZ-0015HSEFR		
EZ-0994HSE-R	EZ-000EHSE-R	EZ-0994HSEFR
EZ-099CWSE-R	EZ-000AWSE-R	EZ-0001WSE-R
EZ-000FWSE-R	EZ-0012WSE-R	EZ-099CWSEFR
EZ-0001WSEFR	EZ-000AWSEFR	
EZ-09906WSE-R	EZ-000BWSE-R	EZ-09906WSEFR

∗: Numerical character or alphabetical character

NOTE: EZ type remote controllers cannot control indoor units via this unit. When you want to operate indoor units directly by the EZ type remote controller, the optional wired remote controller must be purchased. (For applicable wired remote controller, refer to "Connectable remote controllers" on page 05-129.)

■ Functions

Start/Stop	Timer setting
Temperature control	Fan control
Operation mode	Central control (Lock the remote controller functions)

CONTROL SYSTEM

■ Dimensions

Unit: mm

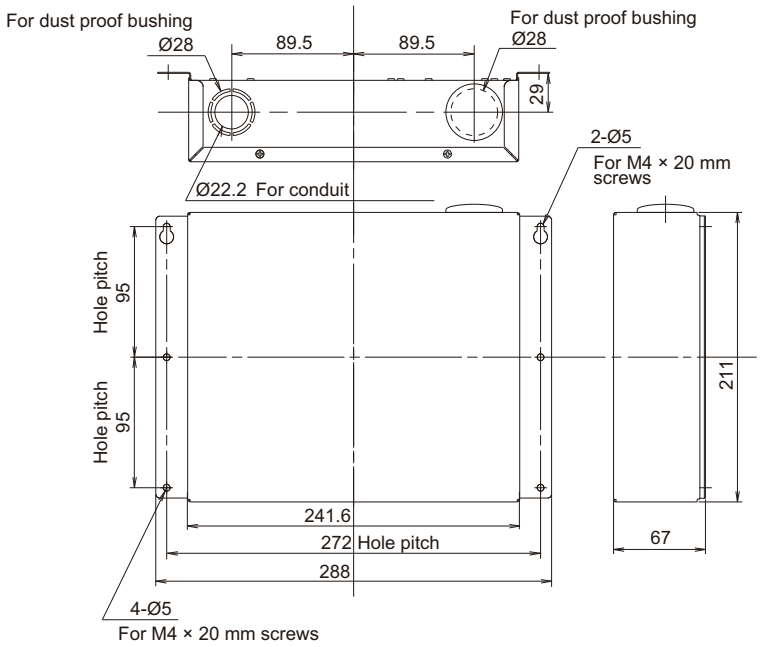

■ Specifications

Power supply		V	1 Ø AC 208—240
Power source frequency		Hz	50/60
Input power		W	6.5
Temperature	Operating	°C	0 to 46
	Packaged	°C	-10 to 60
Humidity	Packaged	%	0 to 95 (RH) No condensation
Dimensions (H × W × D)		mm	67 × 288 × 211
Weight		g	1,500
Fuse capacity		A	3

● Wiring specifications

Use	Cable size	Wire type	Remarks
Power supply cable (using remote control cable)	0.5 to 1.25 mm^2 (20 to 16 AWG)	60245 IEC 57 or equivalent	1 Ø AC 208—240 V 50/60 Hz, 2 wire + ground (Always ground the unit)
Transmission cable	0.33 mm^2 (22 AWG)	LEVEL 4 (NEMA) Non-polar 2 core, twisted pair solid core shielded	LonWorks compatible cable
Remote controller cable	0.33 mm^2 (22 AWG)	Polar 3 core	Use sheathed PVC cable or shielded cable in accordance with the regional cable standard.
External input/ output cable	0.33 mm^2 (22 AWG)	Polar 2 core, twisted pair	Use shielded cable in accordance with the regional cable standard.

CONTROL SYSTEM

3-4. Network converter for LonWorks (UTY-VLGX)

- The convertor for connecting VRF network system to the BMS system built by LonWorks open network, for manage small to medium sized BMS and VRF network system.
- Maximum of 128 indoor units can be connected to one Network converter for LonWorks.
- VRF system can be centrally controlled or monitored from BMS via UTY-VLGX.
- Maximum 4 Network converter for LonWorks can be connected to 1 BMS.

■ Accessory

Name and shape	Q'ty	Application
Cable tie	3	For mounting the power supply cable and transmission cable
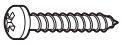 Screw (M4 × 20 mm)	4	For mounting the Network converter
Dust proof bushing	1	For connecting the power supply cable
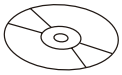 CD-ROM	1	Includes the software and manuals of tools for Network converter
Connector cable	1	For initial setting tool
Installation manual	1	

■ Other required devices (Locally purchased)

- To install tool for convertor, personal computer that satisfies the following system requirements is necessary.

Personal computer system requirement	
Operating system	• Microsoft Windows 7 Professional (32-bit) SP1 • Microsoft Windows 8.1 Pro (32-bit) • Microsoft Windows 10 Home (32-bit or 64-bit) • Microsoft Windows 10 Pro (32-bit or 64-bit) Supported Language: English and Chinese
Memory	1 GB or more
Display	1,024 × 768 or higher resolution, 16-bit or higher color
Interface	RS232C serial port × 1 (Use "COM1" port)
Software	Adobe Reader 9.0 or later
Optical drive	CD-ROM drive

CONTROL SYSTEM

■ System diagram

- **Proper system diagram**

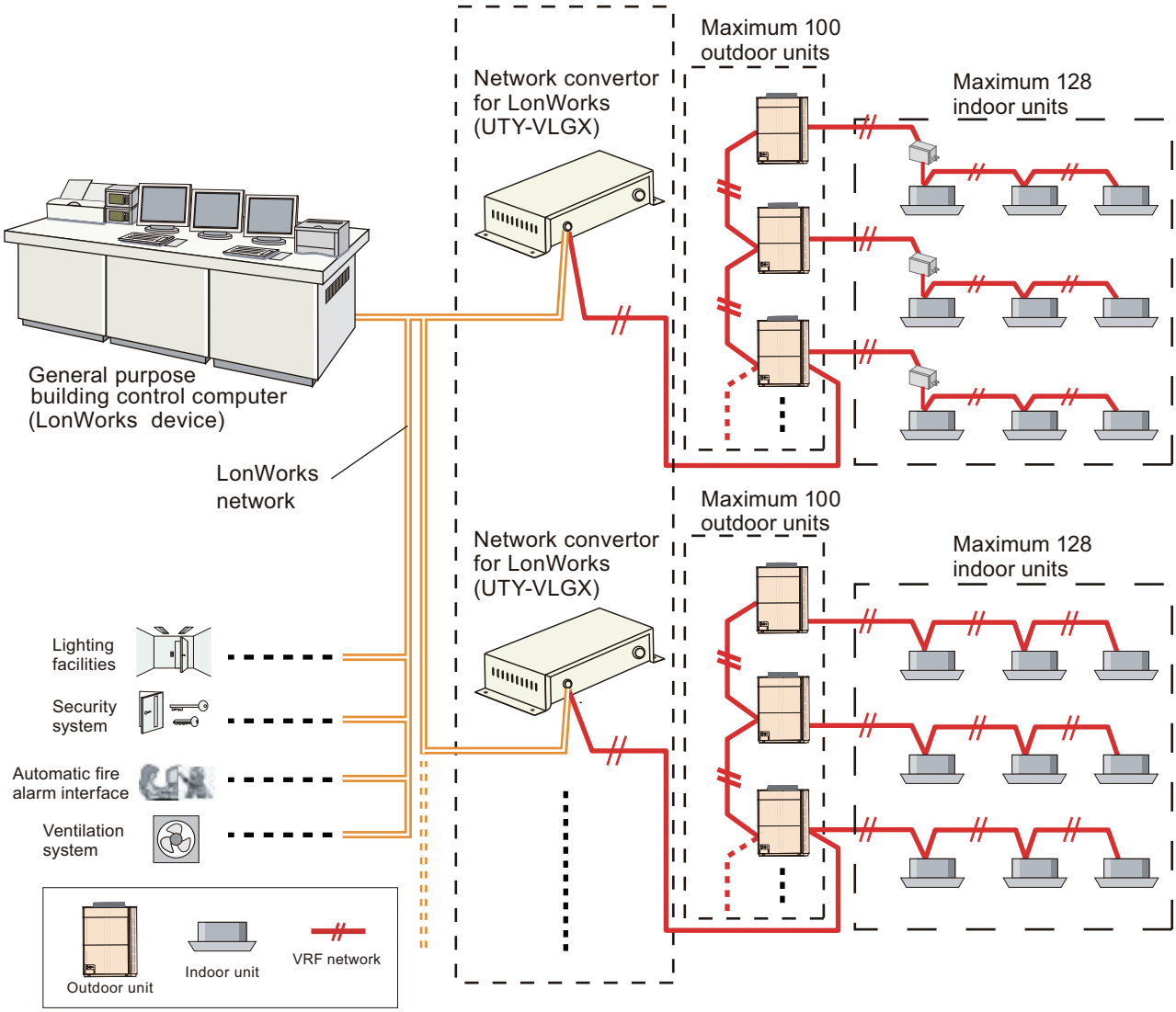

CONTROL SYSTEM

- **Improper system diagram**
  - Example 1 (Prohibited)

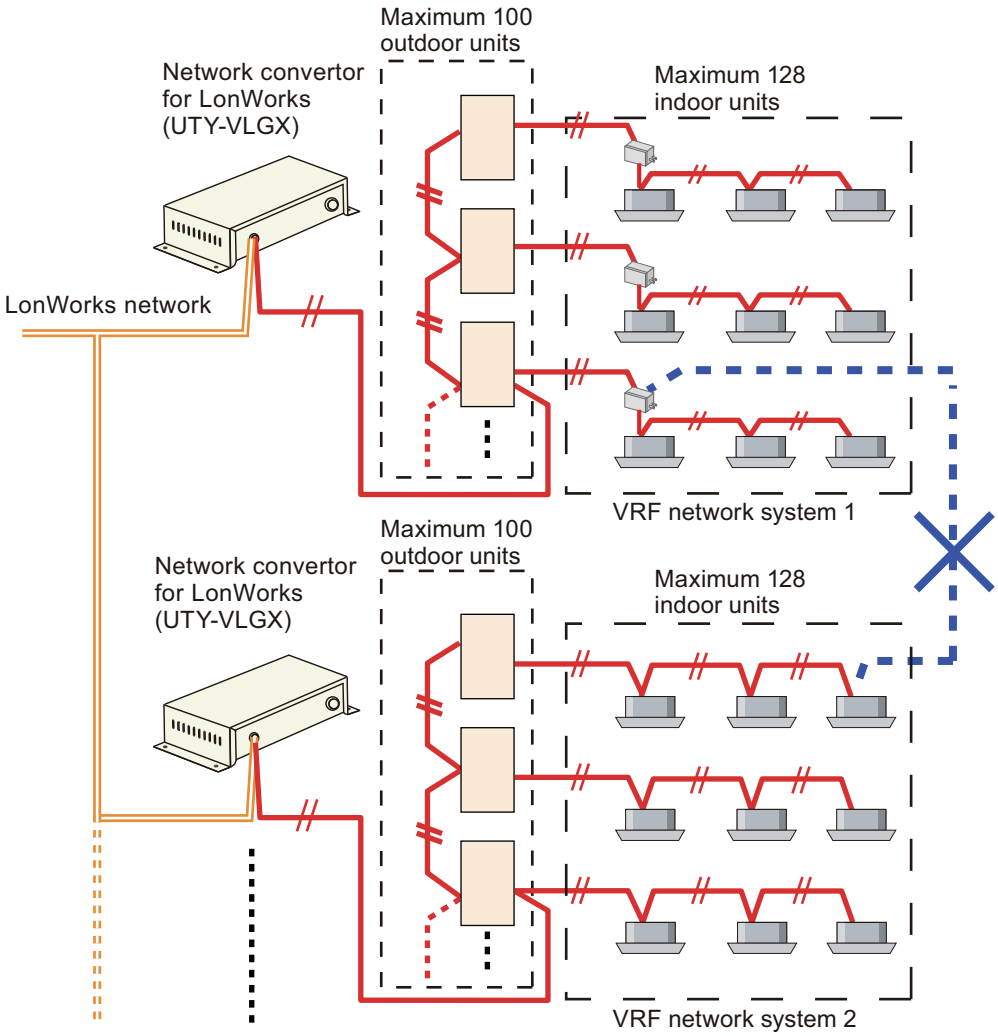

  - Example 2 (Prohibited)

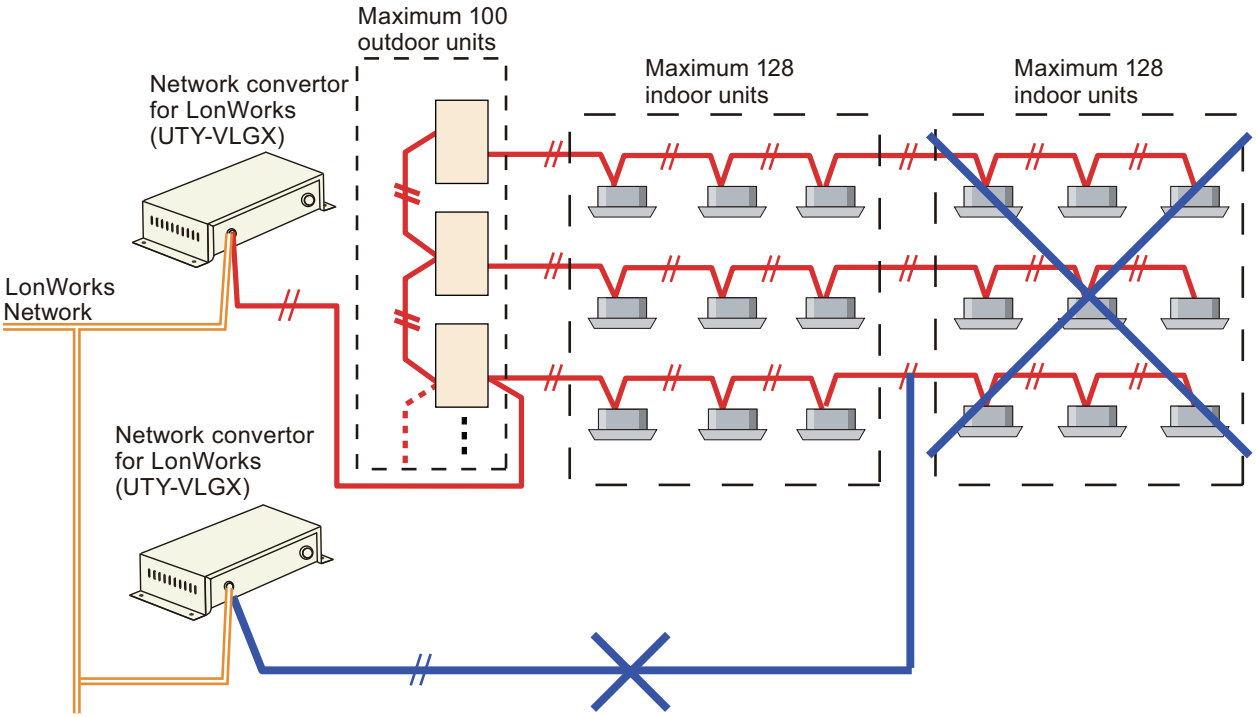

CONTROL SYSTEM

■ Component location of PCB

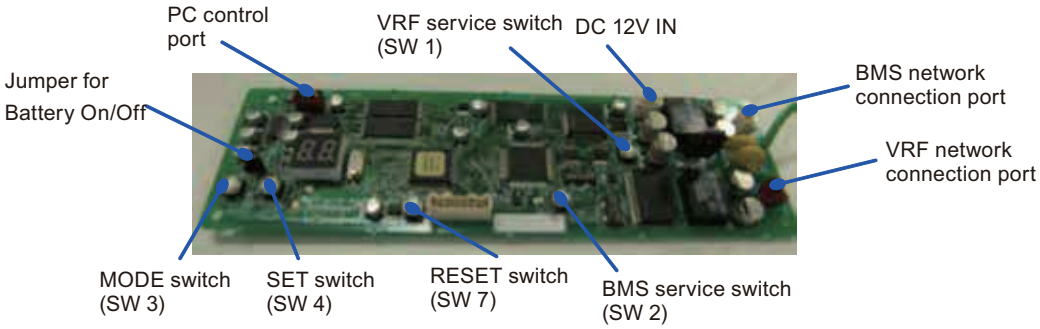

■ Electrical wiring

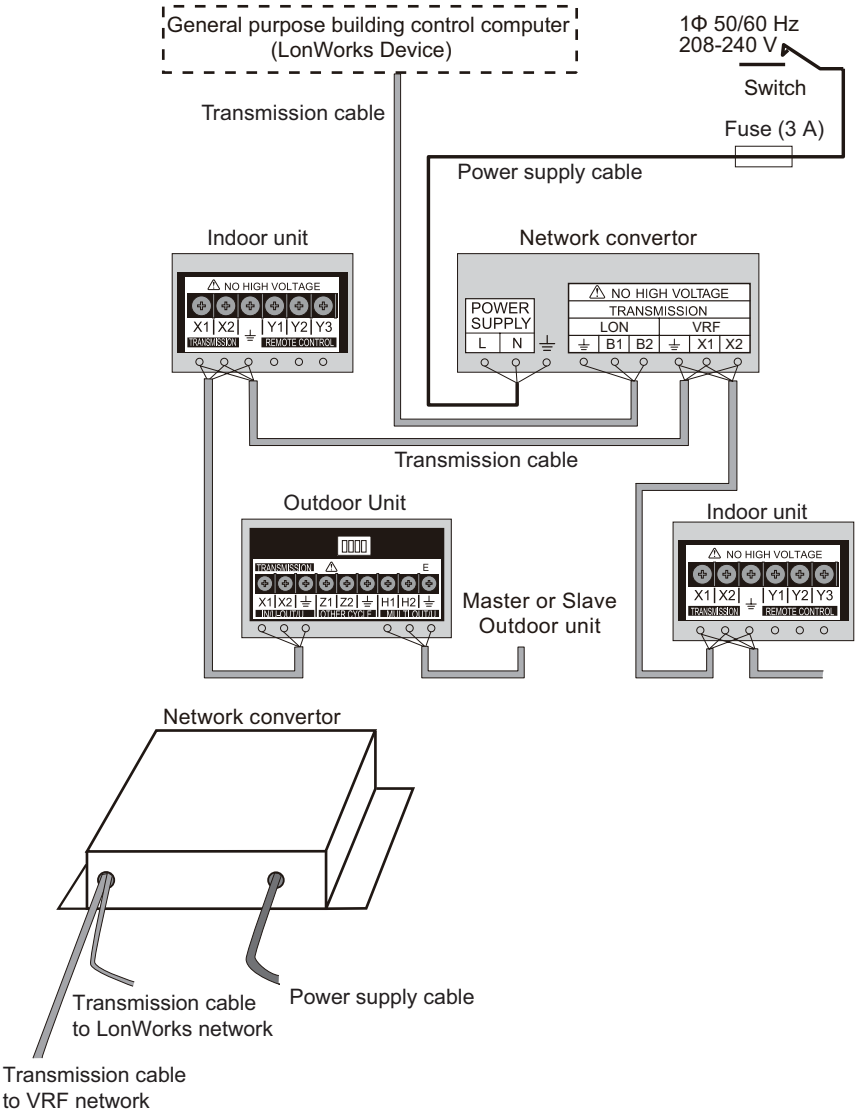

NOTES:

- Do not bind the power cable and transmission cable to avoid an errorneous operation.
- Use shielded cable for transmission cable. The shield metal should be grounded.
- Do not forget to ground the Network converter.

CONTROL SYSTEM

■ Functions

- **Indoor unit control**
  - Individual control
    Commands from LonWorks network are sent to the respective indoor units.
    (LonWorks network → respective indoor units of VRF network)

  - Batch control
    Commands from LonWorks network are sent to all indoor units connected to VRF network.
    (LonWorks network → All indoor units of VRF network)

- **Indoor unit status monitoring**
  Indoor unit status is communicated to the LonWorks network in the form of Lon network variables.
  (LonWorks network ← All indoor units of VRF network)

● Control and monitoring items

Item	Function	Description
Indoor unit control (Individual/Batch)	On/Off Command*1	Start/Stop operation
	Operation mode setting	Cooling/Heating/Auto/Fan/Dry
	Temperature setting	Set room temperature
	Airflow mode setting	Set airflow
	Set point temperature limit Setting	Set room temperature lower limit & room temperature upper limit
	Thermostat off setting*1*2	Thermostat off (Only one controller in VRF network system can do this.)
	Centrally control (Filter reset)	Prohibition of filter sign reset of remote controller
	Centrally control (All mode)	Prohibition of all mode of remote controller
	Centrally control (Timer mode)	Prohibition of timer mode of remote controller
	Centrally control (Set temperature mode)	Prohibition of set temperature mode of remote controller
	Centrally control (On/Off mode)	Prohibition of On/Off mode of remote controller
	Centrally control (On mode)	Prohibition of On mode of remote controller
	Centrally control (Operation mode)	Prohibition of operation mode of remote control
Indoor unit control (Individual)	Filter sign reset	Set filter sign reset command
	Anti-freeze setting	Set anti-freeze command
	Energy save mode setting	Set energy save command
Indoor unit control (Batch)	Time setting	Set time setting command (The controllers those are connected in VRF network system are an object.)
	Emergency stop setting	Set emergency stop command
Outdoor unit control (Individual)	Outdoor unit low noise	Outdoor unit low noise level setting
	Outdoor unit capacity save	Outdoor unit capacity save setting

CONTROL SYSTEM

Item	Function	Description
Indoor unit monitoring (Individual)	On/Off Status*1	The indoor unit which is now operating can be monitored in all indoor units
	Operation mode setting status	Cooling/Heating/Auto/Fan/Dry mode status
	Temperature setting status	Room set temperature status
	Airflow mode setting status	Airflow mode status
	Set point temperature limit status	Room set temperature limit status
	Thermostat off setting status*1*2	Thermostat off set value status
	Centrally control (Filter reset) status	Remote controller filter reset prohibition status
	Centrally control (All mode) status	Remote controller all mode prohibition status
	Centrally control (Timer mode) status	Remote controller timer mode prohibition status
	Centrally control (Set temperature) status	Remote controller set temp. prohibition status
	Centrally control (On/Off) status	Remote controller On/Off prohibition status
	Centrally control (On) status	Remote controller On prohibition status
	Centrally control (Operation) status	Remote controller operation prohibition status
	Anti-freeze setting status	Anti-freeze set status
	Energy save mode setting status	Energy save mode set status
	Filter sign reset status	Filter sign reset status
	Room temperature status	Room temperature status
	Error code status	Error code status can be monitored.
	Operation mode restriction status	Restriction item*3 can be monitored.
Indoor unit monitoring (Batch)	Maintenance mode status	Maintenance status
	Emergency stop setting status	Emergency stop setting status
Outdoor unit monitoring (Individual)	Error code Status	Error code status
Convertor unit monitoring (Individual)	Error code Status	Error code status

NOTES:

- For detailed information, refer to the interface specification posted on “Service & Supports” page of the web site.
  https://www.fujitsu-general.com/global/support/
- *1: To protect the compressor of the outdoor unit, carefully read and understand the following caution that may affect the operation of compressor before executing the setting.

⚠ CAUTION

When performing periodical settings like schedule settings for the following functions, perform the setting to all indoor units in the same refrigerant system simultaneously, conforming to the timing restriction described below.

<Corresponding function>

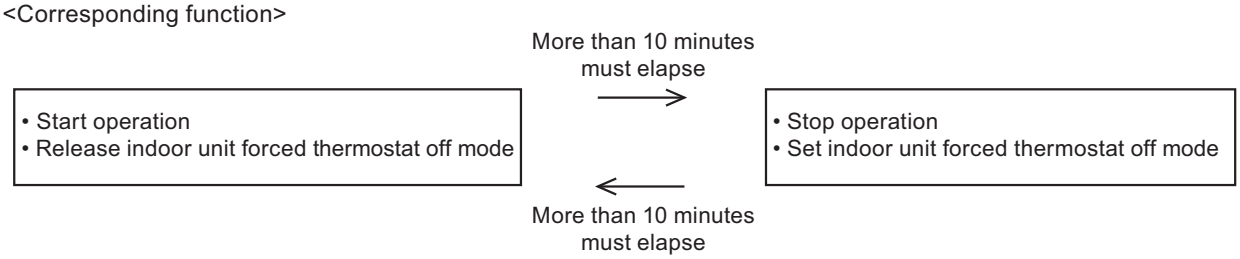

- *2: Forced thermostat off instruction
  – Only one equipment can send these instructions for each refrigerant system.
  – When these instructions are sent by multiple equipment, the system may not respond as instructed or may cause malfunction.

- *3: All operation setting, Timer setting, Room temperature setting, Operation mode setting, On/Off Operation, Filter reset operation, On operation setting

CONTROL SYSTEM

■ Dimensions

Unit: mm

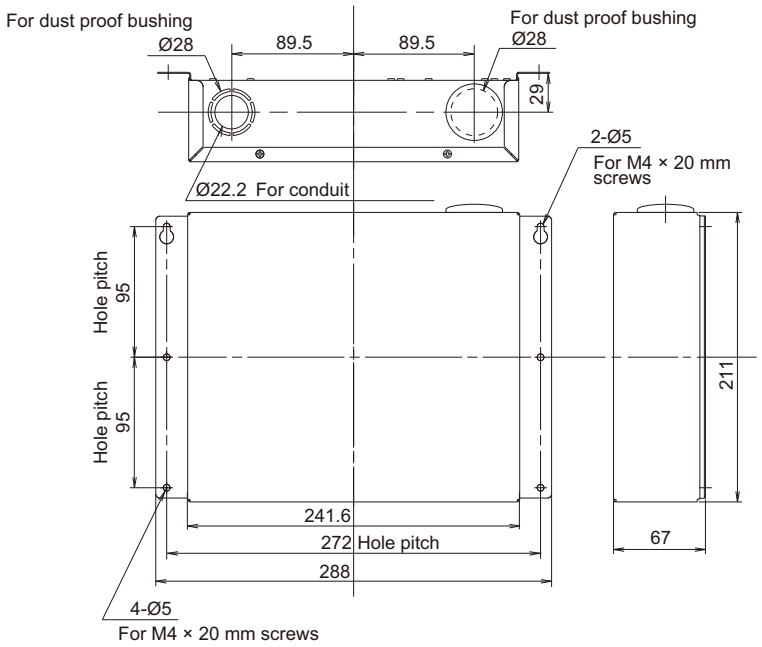

■ Specifications

Power supply		V	1 Ø AC 208—240
Power source frequency		Hz	50/60
Input power		W	4.5
Temperature	Operating	°C	0 to 46
	Packaged	°C	-10 to 60
Humidity	Packaged	%	0 to 95 (RH) No condensation
Dimensions (H × W × D)		mm	67 × 288 × 211
Weight		g	1,500
Fuse capacity		A	3

● Wiring specifications

Use	Cable size	Wire type	Remarks
Power supply cable	0.5 to 1.25 mm^2 (20 to 16 AWG)	60245 IEC 57 or equivalent	1 Ø AC 208—240 V 50/60 Hz, 2 wire + ground (Always ground the unit)
Transmission cable	0.33 mm^2 (22 AWG)	LEVEL 4 (NEMA) Non-polar 2 core, twisted pair solid core shielded	LonWorks compatible cable

● Transmission specifications

LonWorks network		
Transmission speed	kbps	78
Transceiver		FT-X1 (Echelon corporation)
Transmission way form		Free topology
Cable		Twisted pair cable (Shield)
		22 AWG Equivalent
Network connector		One terminal
Terminal register		None attachment (It attaches at the terminal of a network)

CONTROL SYSTEM

■ Total system configuration layout

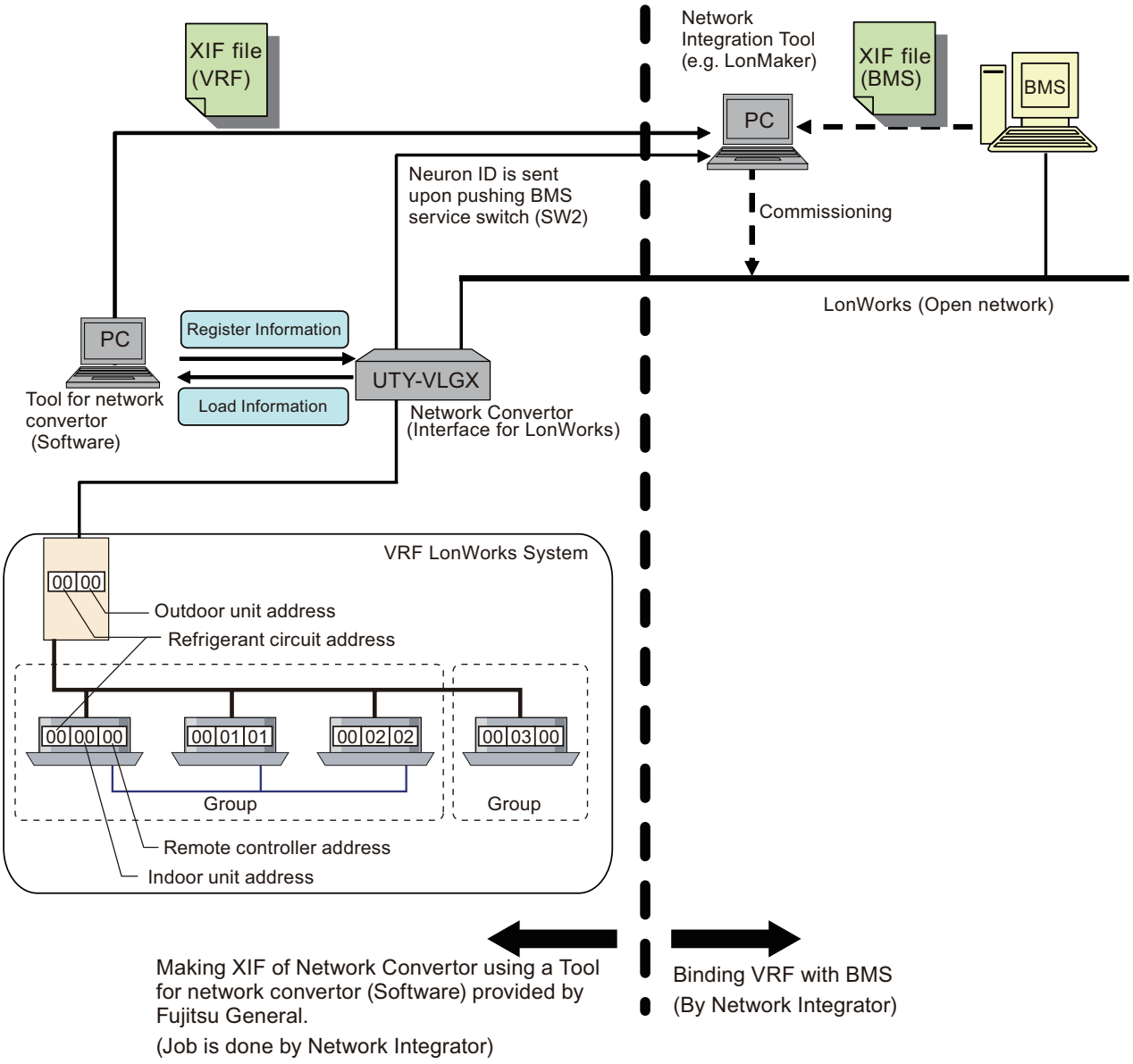

Making XIF of Network Convertor using a Tool for network convertor (Software) provided by Fujitsu General.
(Job is done by Network Integrator)

Binding VRF with BMS
(By Network Integrator)

CONTROL SYSTEM

CONTROL SYSTEM

■ Simple procedure for create XIF and register data to Network converter for LonWorks

Important

Network converter will not operate if,

- VRF network system address (Outdoor and Indoor units address) allocation information are not registered to Network converter.
- XIF data information and VRF network system address allocation information must not be the same.
- Binding and commissioning are not executed. (During binding, read out the Network converter Neuron ID by pushing BMS service switch [SW2] on the main PCB of Network converter.)
- If the ID number registered to the Network converter is not same as the ID number which is included in the XIF of Network converter.

NOTE: For detailed information, refer to the application manual which is included inside packaged CD-ROM.

The following is the on-line procedure. It is also possible to create XIF and register data off-line.

1. Connect the PC and this product.
   Connection will be done by the connector cable provided as an accessory item of this product.

2. Install tool for convertor (software) in PC.
   Tool for convertor is the accessory item of this product.

3. Set this product to installation mode.

4. Setting ID number of this product on PC screen of tool for convertor.
   (ID number is required to identify this product from BMS. A maximum number of four Network converters can be connected to one BMS, and ID number allocation is like 00, 01, and so on.)

5. Initial setting of indoor unit and outdoor unit address by using the tool for convertor.

6. Register the initial setting data to this product. Click “Register” dialog.

7. Set configuration properties.
   To set the communication properties of this product, select the following communication properties and types; otherwise, the default value will be used.
   - Select communication items
     - Event driven communication or Cyclic communication (Default: Cyclic 3 minutes)
     - Communication interval time during turning on all together (Default: 3 minutes)
   - Select communication type (to communicate data with BMS)
     - Communicate only when changing network variable or communicate all network variable. (Default: Only when changing network variable)
     - Communicate only when changing room temperature value (Default: Room temperature changed value 1 °C)

8. Register the configuration properties data to this product. Click the “Register” dialog.

9. Creating/Modifying XIF, and transfer XIF data by USB memory or floppy disk for binding.

10. Press “Reset SW7” to reset this product.

11. Turn off the power. After that, remove the connection of PC and this product respectively.
    In this stage, Network converter is ready for binding and commissioning.

CONTROL SYSTEM

3-5. KNX converter for VRF (UTY-VKGX)

The convertor for connecting VRF network system to the BMS system built by KNX open network, for manage small to medium sized BMS and VRF network system.

■ Accessory

Name and shape	Q'ty	Application
Cable tie	7	For mounting the power supply cable and transmission cable
Screw (M4 × 16 mm)	4	For mounting this product
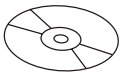 DVD	1	For initial setting
USB cable	1	For initial setting tool
Installation manual	1	

■ Other required devices (Locally purchased)

- To install tool for convertor, personal computer that satisfies the following system requirements is necessary.

Personal computer system requirement	
Operating system	• Microsoft Windows 7 Home Premium (32-bit or 64-bit) SP1 • Microsoft Windows 7 Professional (32-bit or 64-bit) SP1 • Microsoft Windows 8.1 (32-bit or 64-bit) • Microsoft Windows 8.1 Pro (32-bit or 64-bit) • Microsoft Windows 10 Home (32-bit or 64-bit) • Microsoft Windows 10 Pro (32-bit or 64-bit) Supported languages: English, Chinese, French, German, Russian, Spanish, and Polish
Memory	1 GB or more
Display	1,366 × 768 or higher resolution
Interface	USB port (× 1)
Software	Adobe Reader 11.0 or later
Optical drive	DVD drive

CONTROL SYSTEM

■ System diagram

- **Proper system diagram**

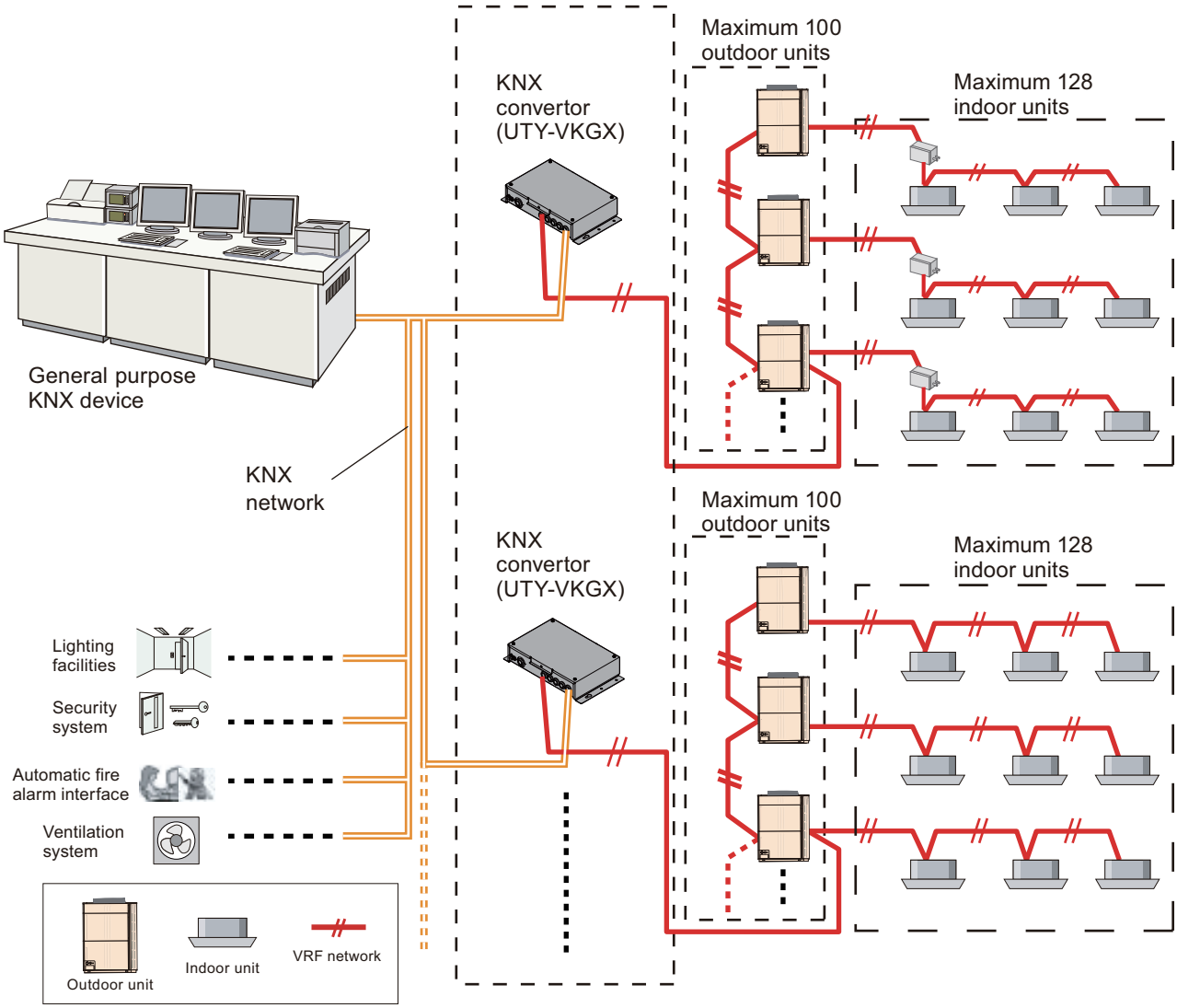

- **Connected unit**

Maximum controllable indoor units number per 1 KNX converter	128
Maximum controllable outdoor units number per 1 KNX converter	100
Maximum connectable KNX converter number per 1 VRF network system	9

CONTROL SYSTEM

■ Component location of PCB

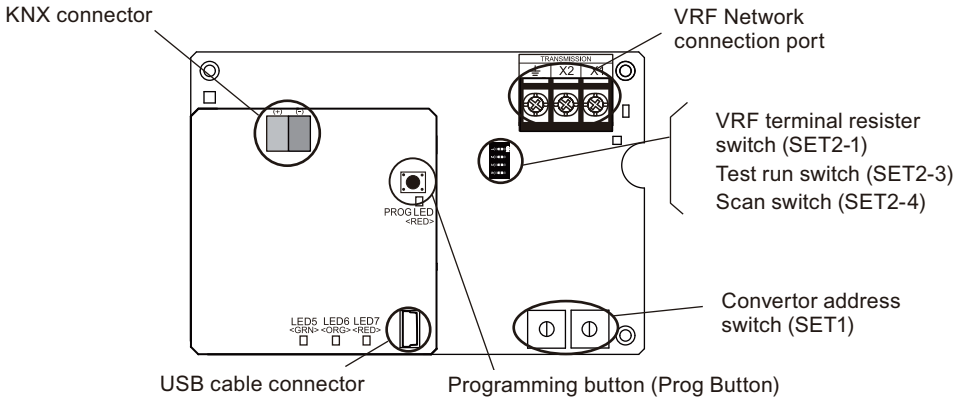

■ Electrical wiring

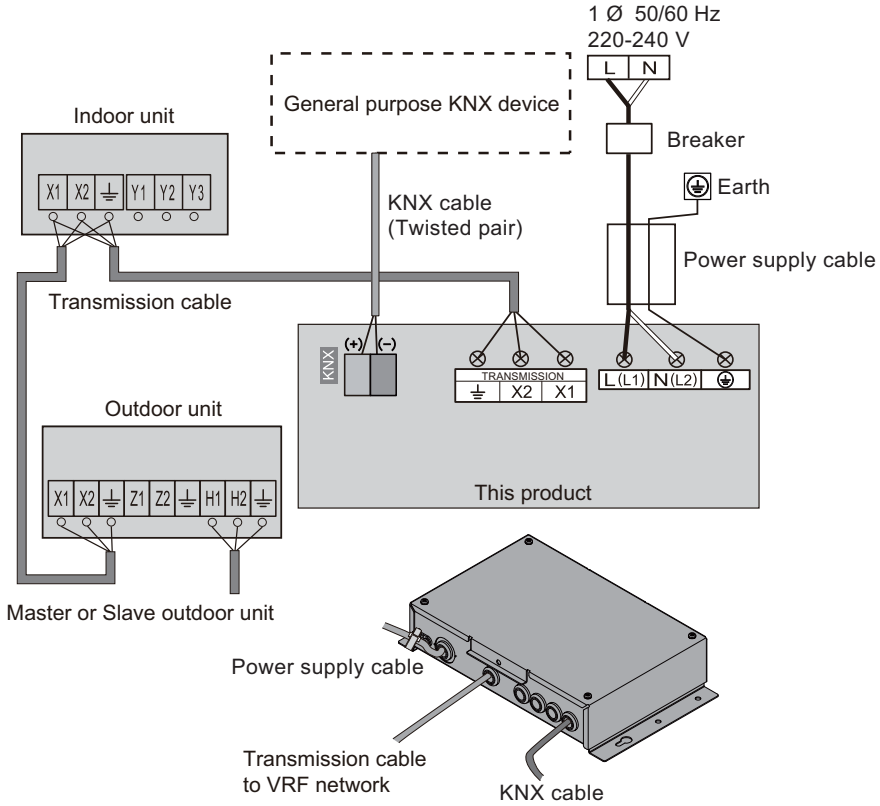

■ Functions

- **Indoor unit control**
  - Individual control
    Commands from KNX network are sent to the respective indoor units.
    (KNX network → respective indoor units of VRF network)

  - Batch control
    Commands from KNX network are sent to all indoor units connected to VRF network.
    (KNX network → All indoor units of VRF network)

- **Indoor unit status monitoring**
  Indoor unit status is communicated to the KNX network in the form of Lon network variables.
  (KNX network ← All indoor units of VRF network)

CONTROL SYSTEM

CONTROL SYSTEM

● Control and monitoring items

Item	Function	Description
Indoor unit control (Individual/Batch)	On/Off Command*1	Start/Stop operation
	Operation mode setting	Cooling/Heating/Auto/Fan/Dry
	Temperature setting	Set room temperature
	Airflow mode setting	Set airflow
	Set point temperature limit Setting	Set room temperature lower limit & room temperature upper limit
	Thermostat off setting*1*2	Thermostat off (Only one controller in VRF network system can do this.)
	Centrally control (Filter reset)	Prohibition of filter sign reset of remote controller
	Centrally control (All mode)	Prohibition of all mode of remote controller
	Centrally control (Timer mode)	Prohibition of timer mode of remote controller
	Centrally control (Set temperature mode)	Prohibition of set temperature mode of remote controller
	Centrally control (On/Off mode)	Prohibition of On/Off mode of remote controller
	Centrally control (On mode)	Prohibition of On mode of remote controller
	Centrally control (Operation mode)	Prohibition of operation mode of remote control
Indoor unit control (Individual)	Filter sign reset	Set filter sign reset command
	Anti-freeze setting	Set anti-freeze command
	Energy save mode setting	Set energy save command
	Vertical/Horizontal airflow direction louver	Set Vertical/Horizontal airflow direction louver
Indoor unit control (Batch)	Time setting	Set time setting command (The controllers those are connected in VRF network system are an object.)
	Emergency stop setting	Set emergency stop command
Outdoor unit control (Individual)	Outdoor unit low noise	Outdoor unit low noise level setting
	Outdoor unit capacity save	Outdoor unit capacity save setting
Indoor unit monitoring (Individual)	On/Off Status*1	The indoor unit which is now operating can be monitored in all indoor units
	Operation mode setting status	Cooling/Heating/Auto/Fan/Dry mode status
	Temperature setting status	Room set temperature status
	Airflow mode setting status	Airflow mode status
	Set point temperature limit status	Room set temperature limit status
	Thermostat off setting status*1*2	Thermostat off set value status
	Centrally control (Filter reset) status	Remote controller filter reset prohibition status
	Centrally control (All mode) status	Remote controller all mode prohibition status
	Centrally control (Timer mode) status	Remote controller timer mode prohibition status
	Centrally control (Set temperature) status	Remote controller set temp. prohibition status
	Centrally control (On/Off) status	Remote controller On/Off prohibition status
	Centrally control (On) status	Remote controller On prohibition status
	Centrally control (Operation) status	Remote controller operation prohibition status
	Anti-freeze setting status	Anti-freeze set status
	Energy save mode setting status	Energy save mode set status
	Filter sign reset status	Filter sign reset status
	Room temperature status	Room temperature status
	Error code status	Error code status can be monitored.
	Vertical/Horizontal airflow direction louver status	Vertical/Horizontal airflow direction louver status
	Indoor unit status	Defrost/oil recovery/pump down can be monitored.

CONTROL SYSTEM

Item	Function	Description
Indoor unit monitoring (Batch)	On/Off status*1	The indoor unit which is now operating can be monitored in all indoor units.
	Maintenance mode status	Maintenance status
	Emergency stop setting status	Emergency stop setting status
	Error status	The indoor unit which is now error can be monitored in all indoor units.
Outdoor unit monitoring (Individual)	Outdoor unit low noise	Outdoor unit low noise level can be monitored.
	Outdoor unit capacity save	Outdoor unit capacity save can be monitored.
Convertor unit monitoring (Individual)	Error code Status	Error code status
	Model name	Convertor model name can be confirmed.
	Software version	Convertor software version can be confirmed.

NOTES:

- For detailed information, refer to the interface specification posted on “Service & Supports” page of the web site.
  https://www.fujitsu-general.com/global/support/
- *1: To protect the compressor of the outdoor unit, carefully read and understand the following caution that may affect the operation of compressor before executing the setting.

⚠ CAUTION

When performing periodical settings like schedule settings for the following functions, perform the setting to all indoor units in the same refrigerant system simultaneously, conforming to the timing restriction described below.

<Corresponding function>

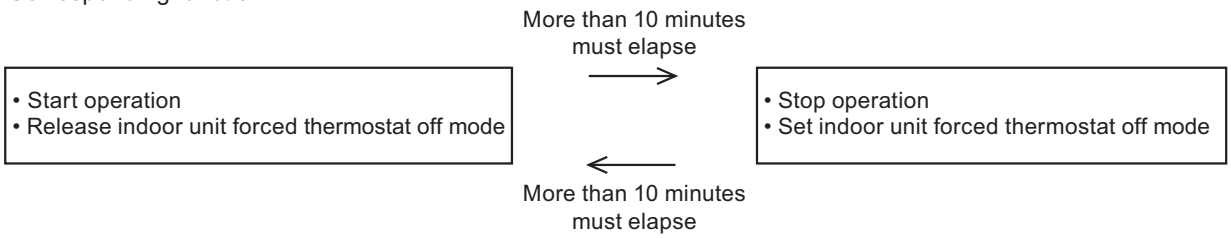

- *2: Forced thermostat off instruction
  – Only one equipment can send these instructions for each refrigerant system.
  – When these instructions are sent by multiple equipment, the system may not respond as instructed or may cause malfunction.

CONTROL SYSTEM

■ Dimensions

Unit: mm

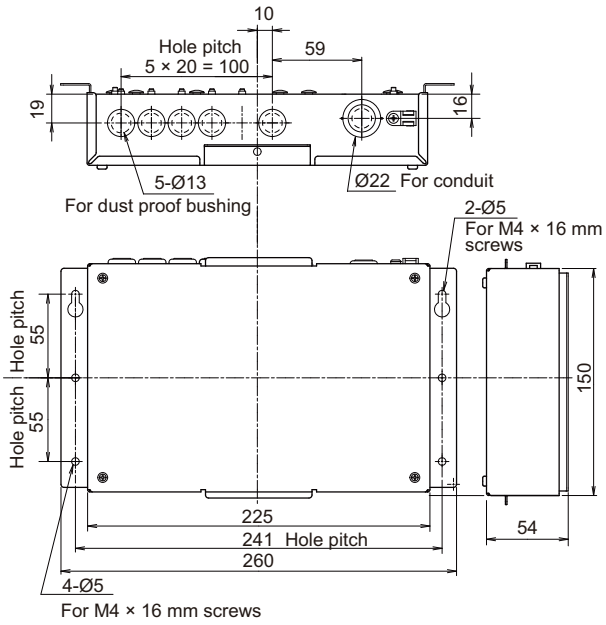

■ Specifications

Power supply		V	1 Ø AC 220—240
Power source frequency		Hz	50/60
Input power		W	1.5
Temperature	Operating	°C	0 to 46
	Packaged	°C	-10 to 60
Humidity	Packaged	%	0 to 95 (RH) No condensation
Dimensions (H × W × D)		mm	54 × 260 × 150
Weight		g	1,200

● Wiring specifications

Use	Cable size	Wire type	Remarks
Power supply cable	0.8 to 1.25 mm^2 (18 to 16 AWG)	60245 IEC 57 or equivalent	1 Ø AC 220—240 V 50/60 Hz, 2 wire + ground (Always ground the unit)
Transmission cable	0.33 mm^2 (22 AWG)	LEVEL 4 (NEMA) Non-polar 2 core, twisted pair solid core shielded	LonWorks compatible cable
KNX cable	0.5 to 0.8 mm^2 (20 to 18 AWG)	AWG18—20 Non-polar 2 core, twisted pair	KNX TP1 (Twister pair 1) cable

CONTROL SYSTEM

■ Simple procedure for register data to KNX converter for VRF

Important
KNX converter for VRF will not operate, if VRF network system address (outdoor and indoor units address) allocation information are not registered to KNX converter for VRF.

Address initial settings are 4 methods as follows:

● Default addresses of indoor unit and outdoor unit are used (Initial setting is not necessary)

Default address value ([Ref No.—Node No.])

Indoor unit:	[00—00] [00—01] ••• [00—63]
	[01—00] [01—01] ••• [01—63]
Outdoor unit:	[00—00] [00—01] ••• [00—03]
	[01—00] [01—01] ••• [01—03]

● Scan of connected indoor units address

Scan procedure is as follows:

1. Turn on the switch of scan setting.
2. “Scan display” by LED (Address is registering inside the convertor).
3. “Number of connected indoor unit display” by LED (Scan is complete).
4. Turn off the switch of scan setting.
5. “Address update display” by LED
6. Turn on the main power again.
7. “Address rewriting display” by LED (Address are synchronized among boards).

If scan error is generated, perform the scan again.

● Setting from PC

NOTE: For detailed information, refer to the application manual included inside packaged DVD.

1. Install tool for convertor (software) in PC.
   Tool for convertor is the accessory item of this product.
2. Connect the PC and this product.
   Connection will be done by the connector cable provided as an accessory item of this product.
3. Set this product to USB mode.
4. Initial setting of indoor unit and outdoor unit addresses by using the tool for convertor.
5. Register the initial setting data to this product. Click “Register” dialog.
   In this stage, this product is ready for binding and commissioning.

● Setting from ETS

For how to configure the settings from the ETS, refer to the interface specification posted on “Service & Supports” page of the web site.
https://www.fujitsu-general.com/global/support/

CONTROL SYSTEM

3-6. KNX converter for indoor unit (UTY-VKSX)

The convertor for connecting indoor unit to the central/home controller installed in KNX open network in order to manage the indoor unit from KNX network.

■ Accessory

Name and shape	Q'ty	Application
Cable tie	4	For mounting transmission cable
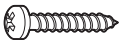 Screw (M4 × 16 mm)	3	For mounting this product
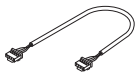 Connector cable	1	For connecting to indoor unit (1.5 m)
Installation manual	1	

CONTROL SYSTEM

■ System diagram

- **Proper system diagram**

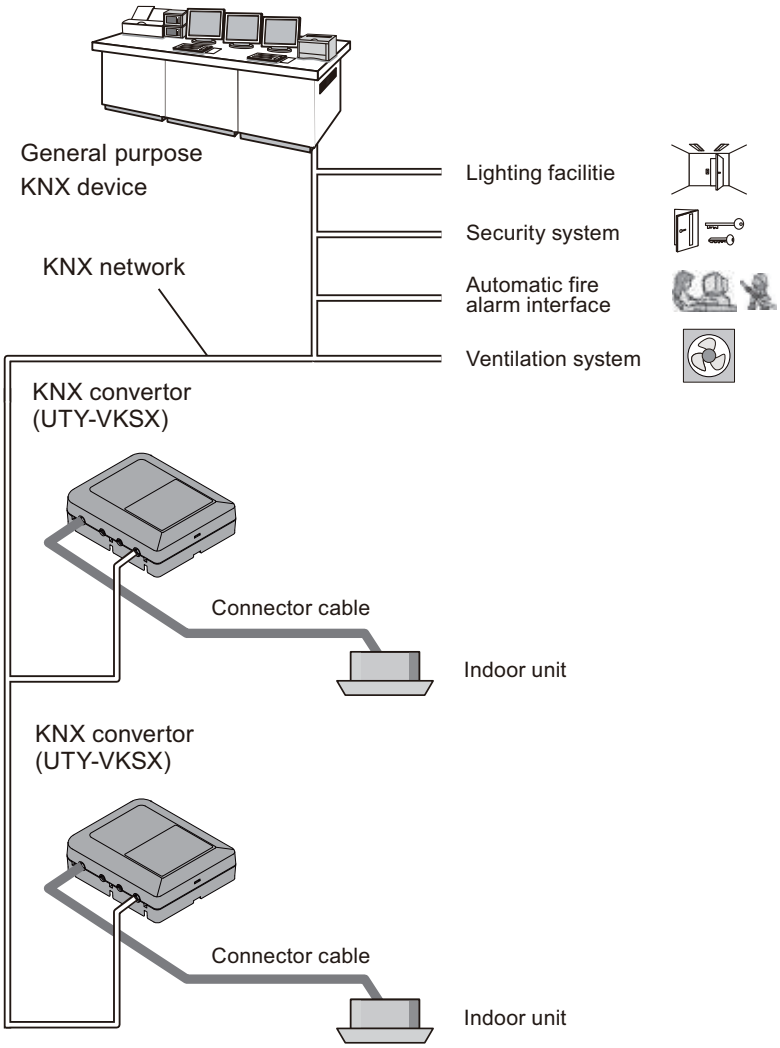

- **Connected unit**

Maximum controllable indoor units number per 1 KNX converter	1

CONTROL SYSTEM

■ Component location of PCB

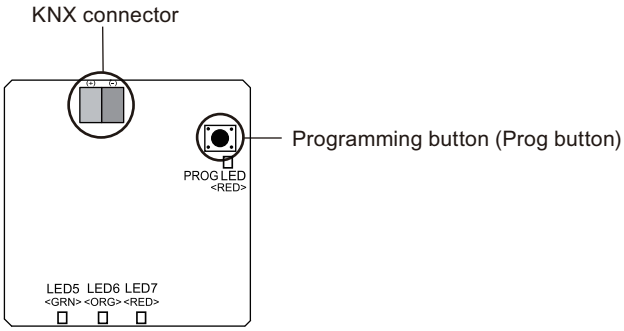

■ Electrical wiring

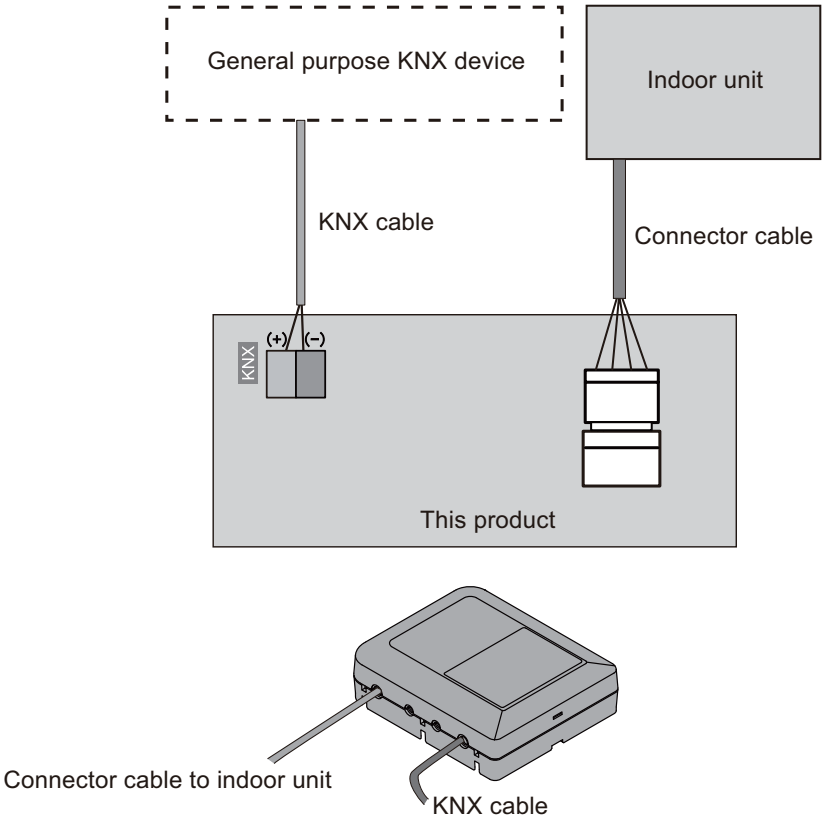

CONTROL SYSTEM

■ Functions

- **Indoor unit control**
  Commands from KNX network are sent to the respective indoor units.
  (KNX network → indoor units)

- **Indoor unit status monitoring**
  Indoor unit status is communicated to the KNX network in the form of indoor unit variables.
  (KNX network ← indoor units)

● Control and monitoring items

Item	Function	Description
Indoor unit control	On/Off Command*	Start/Stop operation
	Operation mode setting	Cooling/Heating/Auto/Fan/Dry
	Temperature setting	Set room temperature
	Airflow mode setting	Set airflow
	Thermostat off setting*	Thermostat off (Only one controller in VRF network system can do this.)
	Centrally control (Filter reset)	Prohibition of filter sign reset of remote controller
	Centrally control (All mode)	Prohibition of all mode of remote controller
	Centrally control (Timer mode)	Prohibition of timer mode of remote controller
	Centrally control (Set temperature mode)	Prohibition of set temperature mode of remote controller
	Centrally control (On/Off mode)	Prohibition of On/Off mode of remote controller
	Centrally control (On mode)	Prohibition of On mode of remote controller
	Centrally control (Operation mode)	Prohibition of operation mode of remote control
	Filter sign reset	Set filter sign reset command
	Energy save mode setting	Set energy save command
	Vertical/Horizontal airflow direction louver setting	Set Vertical/Horizontal airflow direction louver
	Human detection auto save	Set human detection auto save
	Human detection auto off	Set human detection auto off
	Scene control	Set plural functions in a mass as one scene

CONTROL SYSTEM

Item	Function	Description
Indoor unit monitoring	On/Off Status*	The indoor unit which is now operating can be monitored in all indoor units
	Operation mode setting status	Cooling/Heating/Auto/Fan/Dry mode status
	Temperature setting status	Room set temperature status
	Airflow mode setting status	Airflow mode status
	Set point temperature limit status	Room set temperature limit status
	Thermostat off setting status*	Thermostat off set value status
	Centrally control (Filter reset) status	Remote controller filter reset prohibition status
	Centrally control (All mode) status	Remote controller all mode prohibition status
	Centrally control (Timer mode) status	Remote controller timer mode prohibition status
	Centrally control (Set temperature) status	Remote controller set temp. prohibition status
	Centrally control (On/Off) status	Remote controller On/Off prohibition status
	Centrally control (On) status	Remote controller On prohibition status
	Centrally control (Operation) status	Remote controller operation prohibition status
	Energy save mode setting status	Energy save mode set status
	Filter sign reset status	Filter sign reset status
	Room temperature status	Room temperature status
	Error code status	Error code status can be monitored.
	Vertical/Horizontal airflow direction louver status	Vertical/Horizontal airflow direction louver status
	Indoor unit status	Defrost/oil recovery/pump down can be monitored.
	Human detection auto save	Set human detection auto save status
	Human detection auto off	Set human detection auto off status
	Demand status	Demand control status
	Scene status	Scene set status
Convertor unit monitoring	Error code status	Error code status
	Model name	Convertor model name can be confirmed.
	Software version	Convertor software version can be confirmed.

NOTES:

- For detailed information, refer to the interface specification posted on “Service & Supports” page of the web site.
  https://www.fujitsu-general.com/global/support/
- *: To protect the compressor of the outdoor unit, carefully read and understand the following caution that may affect the operation of compressor before executing the setting.

⚠ CAUTION

When performing periodical settings like schedule settings for the following functions, perform the setting to all indoor units in the same refrigerant system simultaneously, conforming to the timing restriction described below.

<Corresponding function>

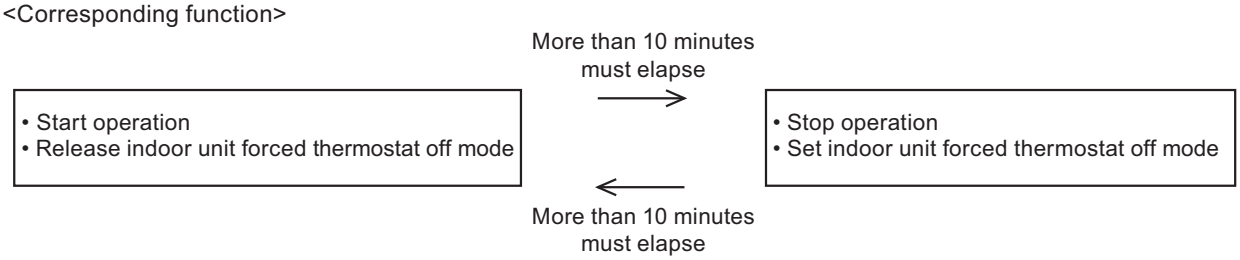

CONTROL SYSTEM

■ Dimensions

Unit: mm

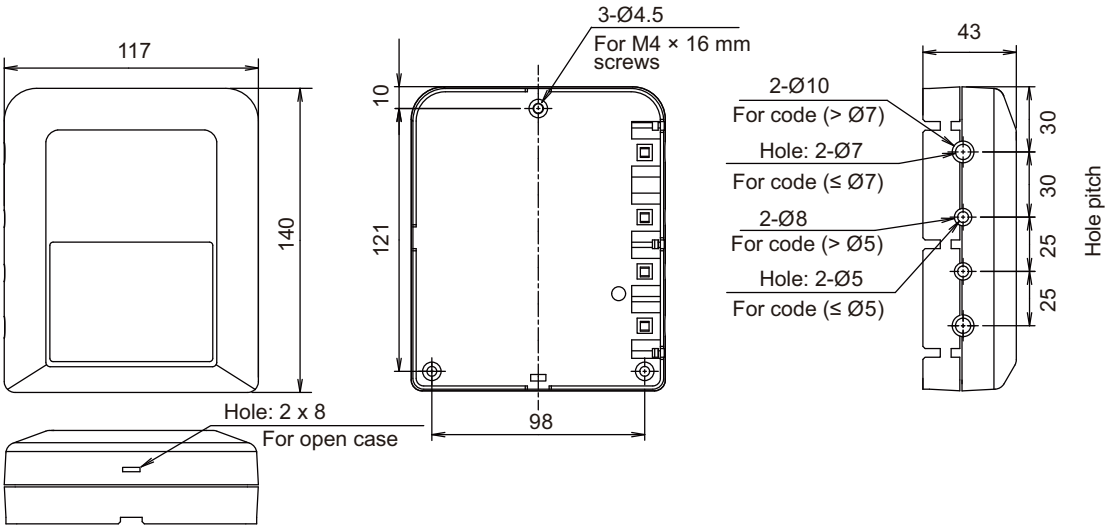

■ Specifications

Input power		W	0.6
Temperature	Operating	°C	0 to 46
	Packaged	°C	-10 to 60
Humidity	Packaged	%	0 to 95 (RH) No condensation
Dimensions (H × W × D)		mm	43 × 117 × 140
Weight		g	215

● Wiring specifications

Use	Cable size	Wire type	Remarks
KNX cable	0.5 to 0.8 mm^2 (20 to 18 AWG)	AWG18—20 Non-polar 2 core, twisted pair	KNX TP1 (Twister pair 1) cable

CONTROL SYSTEM

3-7. Modbus converter for VRF (UTY-VMGX)

The convertor for connecting VRF network system to the BMS system built by Modbus open network, for manage small to medium sized BMS and VRF network system.

■ Accessory

Name and shape	Q'ty	Application
Cable tie	7	For mounting the power supply cable and transmission cable
Screw (M4 × 16 mm)	4	For mounting the Modbus converter
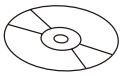 DVD	1	For initial setting
Modbus connector	1	For connecting the cable and attaching the board connector
USB cable	1	For initial setting tool
Installation manual	1	

■ Other required devices (Locally purchased)

- To install tool for convertor, personal computer that satisfies the following system requirements is necessary.

Personal computer system requirement	
Operating system	• Microsoft Windows 7 Home Premium (32-bit or 64-bit) SP1 • Microsoft Windows 7 Professional (32-bit or 64-bit) SP1 • Microsoft Windows 8.1 (32-bit or 64-bit) • Microsoft Windows 8.1 Pro (32-bit or 64-bit) • Microsoft Windows 10 Home (32-bit or 64-bit) • Microsoft Windows 10 Pro (32-bit or 64-bit) Supported languages: English, Chinese, French, German, Russian, Spanish, and Polish
Memory	1 GB or more
Display	1,366 × 768 or higher resolution
Interface	USB port (× 1)
Software	Adobe Reader 11.0 or later
Optical drive	DVD drive

CONTROL SYSTEM

System diagram

- **Proper system diagram**

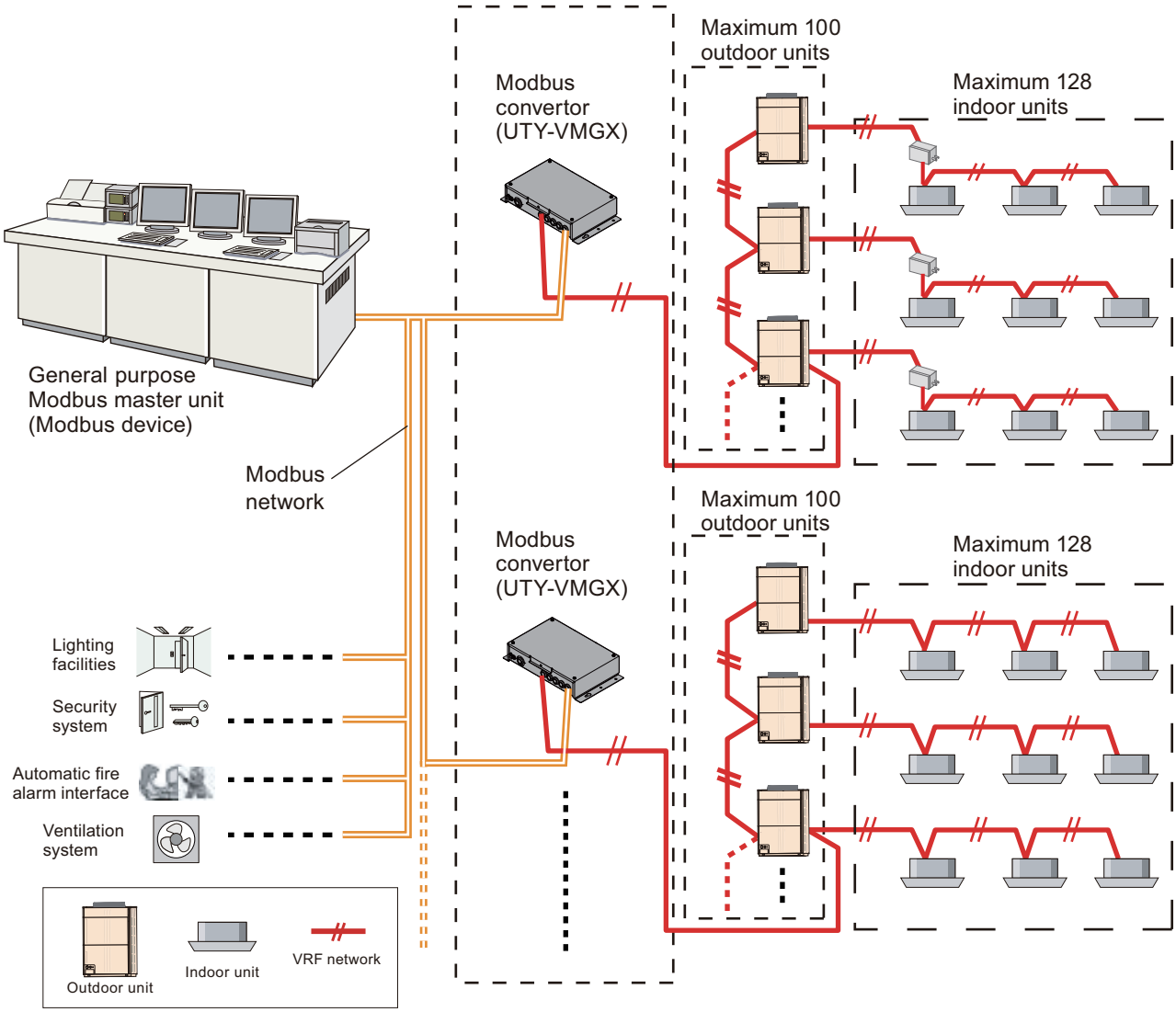

- **Connected unit**

Maximum controllable indoor units number per 1 Modbus converter		128
Maximum controllable outdoor units number per 1 Modbus converter		100
Maximum connectable Modbus converter number per 1 VRF network system		9
Maximum number of connected Modbus converter units to one Modbus master unit	Without repeater	31
	With repeater	247

CONTROL SYSTEM

■ Component location of PCB

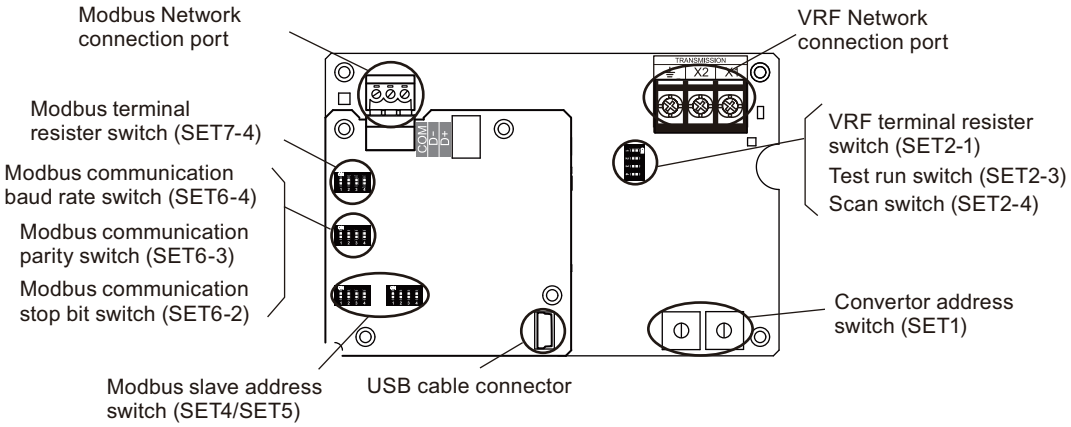

■ Electrical wiring

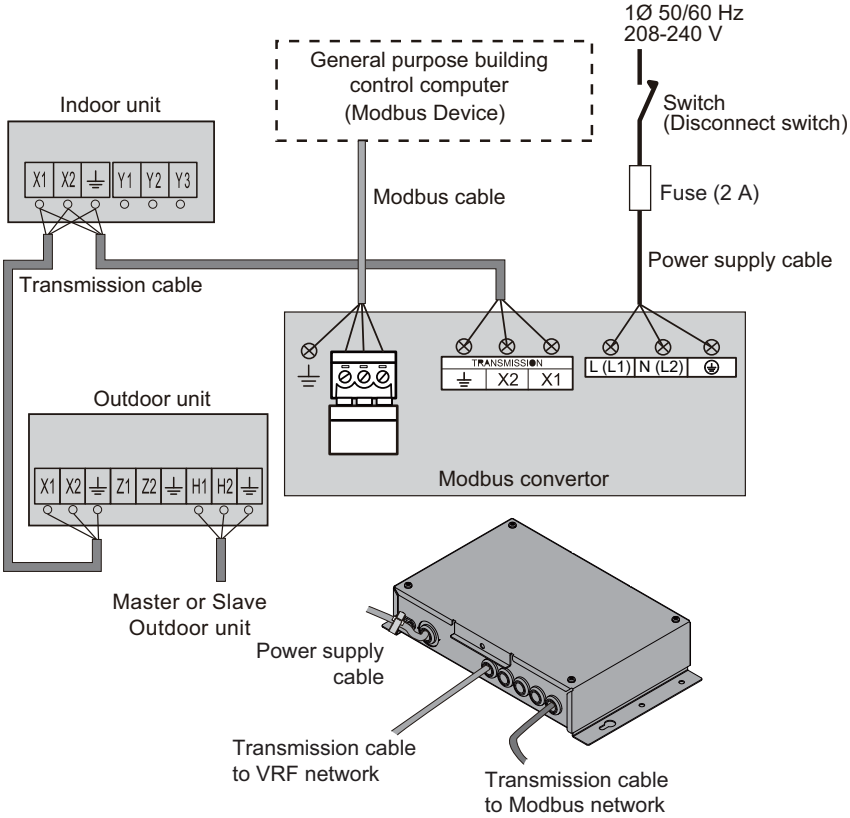

■ Functions

- **Indoor unit control**
  - Individual control
    Commands from Modbus network are sent to the respective indoor units.
    (Modbus network → respective indoor units of VRF network)
  - Batch control
    Commands from Modbus network are sent to all indoor units connected to VRF network.
    (Modbus network → All indoor units of VRF network)
- **Indoor unit status monitoring**
  Indoor unit status is communicated to the Modbus network in the form of Lon network variables.
  (Modbus network ← All indoor units of VRF network)

CONTROL SYSTEM

● Control and monitoring items

Item	Function	Description
Indoor unit control (Individual/Batch)	On/Off Command*1	Start/Stop operation
	Operation mode setting	Cooling/Heating/Auto/Fan/Dry
	Temperature setting	Set room temperature
	Airflow mode setting	Set airflow
	Set point temperature limit Setting	Set room temperature lower limit & room temperature upper limit
	Thermostat off setting*1*2	Thermostat off (Only one controller in VRF network system can do this.)
	Centrally control (Filter reset)	Prohibition of filter sign reset of remote controller
	Centrally control (All mode)	Prohibition of all mode of remote controller
	Centrally control (Timer mode)	Prohibition of timer mode of remote controller
	Centrally control (Set temperature mode)	Prohibition of set temperature mode of remote controller
	Centrally control (On/Off mode)	Prohibition of On/Off mode of remote controller
	Centrally control (On mode)	Prohibition of On mode of remote controller
	Centrally control (Operation mode)	Prohibition of operation mode of remote control
Indoor unit control (Individual)	Filter sign reset	Set filter sign reset command
	Anti-freeze setting	Set anti-freeze command
	Energy save mode setting	Set energy save command
	Vertical/Horizontal airflow direction louver	Set Vertical/Horizontal airflow direction louver
	Test run	Test run
Indoor unit control (Batch)	Time setting	Set time setting command (The controllers those are connected in VRF network system are an object.)
	Emergency stop setting	Set emergency stop command
Outdoor unit control (Individual)	Outdoor unit low noise	Outdoor unit low noise level setting
	Outdoor unit capacity save	Outdoor unit capacity save setting
Indoor unit monitoring (Individual)	On/Off Status*1	The indoor unit which is now operating can be monitored in all indoor units
	Operation mode setting status	Cooling/Heating/Auto/Fan/Dry mode status
	Temperature setting status	Room set temperature status
	Airflow mode setting status	Airflow mode status
	Set point temperature limit status	Room set temperature limit status
	Thermostat off setting status*1*2	Thermostat off set value status
	Centrally control (Filter reset) status	Remote controller filter reset prohibition status
	Centrally control (All mode) status	Remote controller all mode prohibition status
	Centrally control (Timer mode) status	Remote controller timer mode prohibition status
	Centrally control (Set temperature) status	Remote controller set temp. prohibition status
	Centrally control (On/Off) status	Remote controller On/Off prohibition status
	Centrally control (On) status	Remote controller On prohibition status
	Centrally control (Operation) status	Remote controller operation prohibition status
	Anti-freeze setting status	Anti-freeze set status
	Energy save mode setting status	Energy save mode set status
	Filter sign reset status	Filter sign reset status
	Room temperature status	Room temperature status
	Error code status	Error code status can be monitored.
	Vertical/Horizontal airflow direction louver status	Vertical/Horizontal airflow direction louver status
	Indoor unit status	Defrost/oil recovery/pump down can be monitored.
	Test run	Test run

CONTROL SYSTEM

Item	Function	Description
Indoor unit monitoring (Batch)	On/Off status*1	The indoor unit which is now operating can be monitored in all indoor units.
	Maintenance mode status	Maintenance status
	Emergency stop setting status	Emergency stop setting status
	Error status	The indoor unit which is now error can be monitored in all indoor units.
Outdoor unit monitoring (Individual)	Outdoor unit low noise	Outdoor unit low noise level can be monitored.
	Outdoor unit capacity save	Outdoor unit capacity save can be monitored.
	Error code Status	Error code status
Convertor unit monitoring (Individual)	Error code Status	Error code status
	Modbus communication setting Information	Baud rate/slave address can be monitored.
	Model name	Convertor model name can be confirmed.
	Software version	Convertor software version can be confirmed.

NOTES:

- For detailed information, refer to the interface specification posted on “Service & Supports” page of the web site.
  https://www.fujitsu-general.com/global/support/
- *1: To protect the compressor of the outdoor unit, carefully read and understand the following caution that may affect the operation of compressor before executing the setting.

⚠ CAUTION

When performing periodical settings like schedule settings for the following functions, perform the setting to all indoor units in the same refrigerant system simultaneously, conforming to the timing restriction described below.

<Corresponding function>

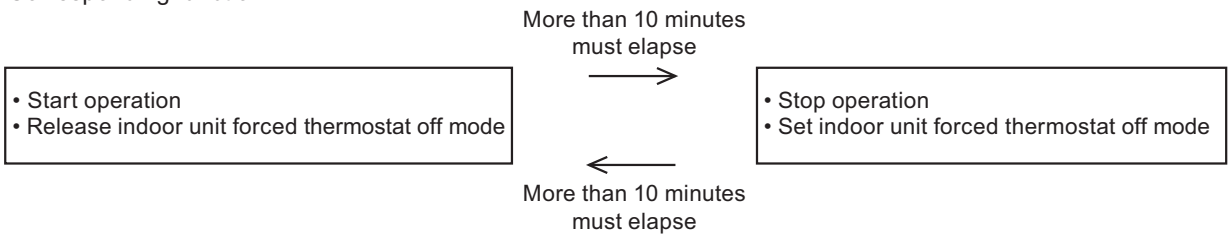

- *2: Forced thermostat off instruction
  – Only one equipment can send these instructions for each refrigerant system.
  – When these instructions are sent by multiple equipment, the system may not respond as instructed or may cause malfunction.

CONTROL SYSTEM

■ Dimensions

Unit: mm

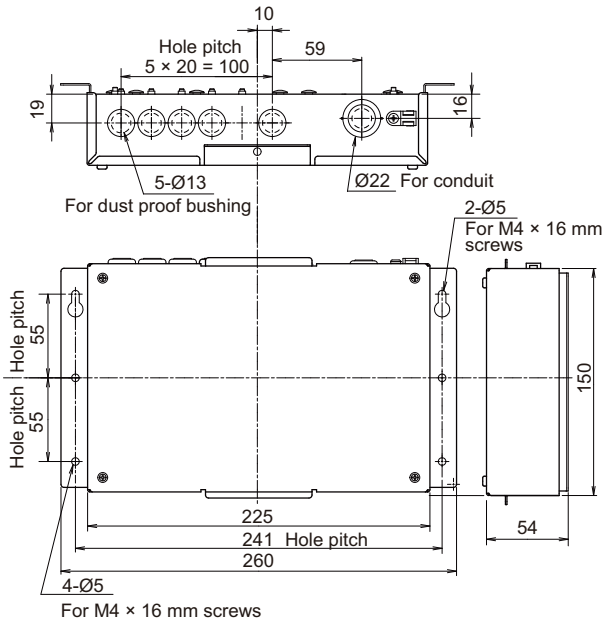

■ Specifications

Power supply		V	1 Ø AC 208—240
Power source frequency		Hz	50/60
Input power		W	2.0
Temperature	Operating	°C	0 to 46
	Packaged	°C	-10 to 60
Humidity	Packaged	%	0 to 95 (RH) No condensation
Dimensions (H × W × D)		mm	54 × 260 × 150
Weight		g	1,100
Fuse capacity		A	2

● Wiring specifications

Use	Cable size	Wire type	Remarks
Power supply cable	0.5 to 1.25 mm^2 (20 to 16 AWG)	60245 IEC 57 or equivalent	1 Ø AC 208—240 V 50/60 Hz, 2 wire + ground (Always ground the unit)
Transmission cable	0.33 mm^2 (22 AWG)	LEVEL 4 (NEMA) Non-polar 2 core, twisted pair solid core shielded	LonWorks compatible cable
Modbus cable	0.128 to 1.25 mm^2 (26 to 16 AWG)	AWG 16—26 3 Wire + Sheathed PVC cable	

● Transmission specifications

Transfer mode		RTU mode
Communication method		Half-duplex operation, Master/Slave method
Communication speed	bps	9,600/19,200
Synchronous system		Asynchronous communication method
Data bit	bit	8
Parity		even/odd/none
Stop bit	bit	2 (no parity)/1
Network		3 wire RS485
Maximum cable length	m	1,000

CONTROL SYSTEM

■ Simple procedure for register data to Modbus converter for VRF

Important
Modbus converter for VRF will not operate, if VRF network system address (outdoor and indoor units address) allocation information are not registered to Modbus converter for VRF.

Address initial settings are 3 methods as follows:

● Default addresses of indoor unit and outdoor unit are used (Initial setting is not necessary)

Default address value ([Ref No.—Node No.])

Indoor unit:	[00—00] [00—01] ••• [00—63]
	[01—00] [01—01] ••• [01—63]
Outdoor unit:	[00—00] [00—01] ••• [00—03]
	[01—00] [01—01] ••• [01—03]

● Scan of connected indoor units address

Scan procedure is as follows:

1. Turn on the switch of scan setting.
2. “Scan display” by LED (Address is registering inside the convertor).
3. “Number of connected indoor unit display” by LED (Scan is complete).
4. Turn off the switch of scan setting.
5. “Address update display” by LED
6. Turn on the main power again.
7. “Address rewriting display” by LED (Address are synchronized among boards).

If scan error is generated, perform the scan again.

● Setting from PC

NOTE: For detailed information, refer to the application manual included inside packaged DVD.

1. Install tool for convertor (software) in PC.
   Tool for convertor is the accessory item of this product.
2. Connect the PC and this product.
   Connection will be done by the connector cable provided as an accessory item of this product.
3. Set this product to USB mode.
4. Initial setting of indoor unit and outdoor unit addresses by using the tool for convertor.
5. Register the initial setting data to this product. Click “Register” dialog.
   In this stage, this product is ready for binding and commissioning.

CONTROL SYSTEM

3-8. Modbus converter for indoor unit (UTY-VMSX)

The convertor for connecting indoor unit to the BMS system built by Modbus open network, for manage small to medium sized BMS and indoor unit.

■ Accessory

Name and shape	Q'ty	Application
Cable tie	4	For mounting transmission cable
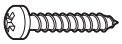 Screw (M4 × 16 mm)	3	For mounting the Modbus converter
Modbus connector	1	For connecting the cable and attaching the board connector
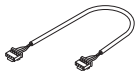 Connector cable	1	For connecting to indoor unit (1.5 m)
Installation manual	1	

CONTROL SYSTEM

■ System diagram

- **Proper system diagram**

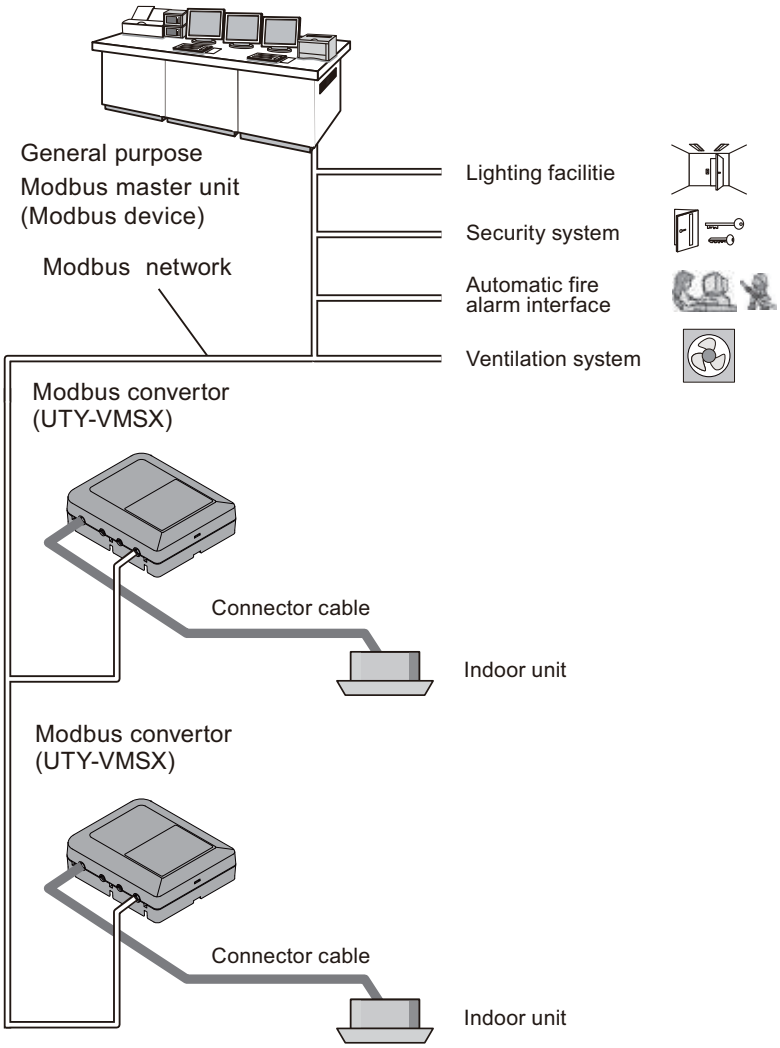

- **Connected unit**

Maximum controllable indoor units number per 1 Modbus converter		1
Maximum number of connected Modbus converter units to one Modbus master unit	Without repeater	31
	With repeater	247

CONTROL SYSTEM

■ Component location of PCB

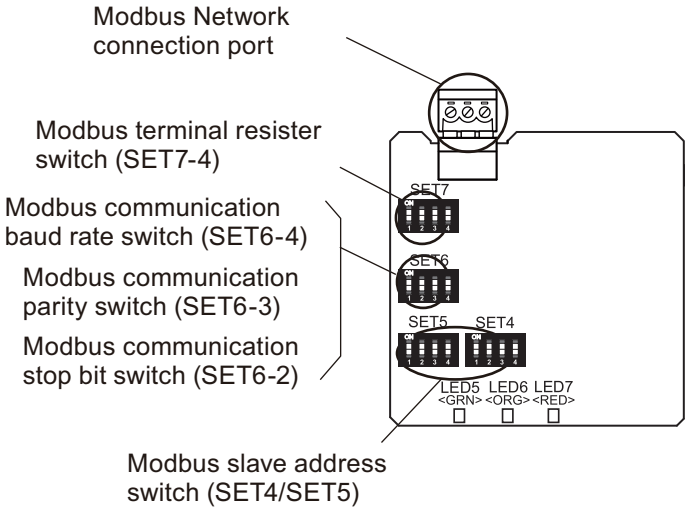

■ Electrical wiring

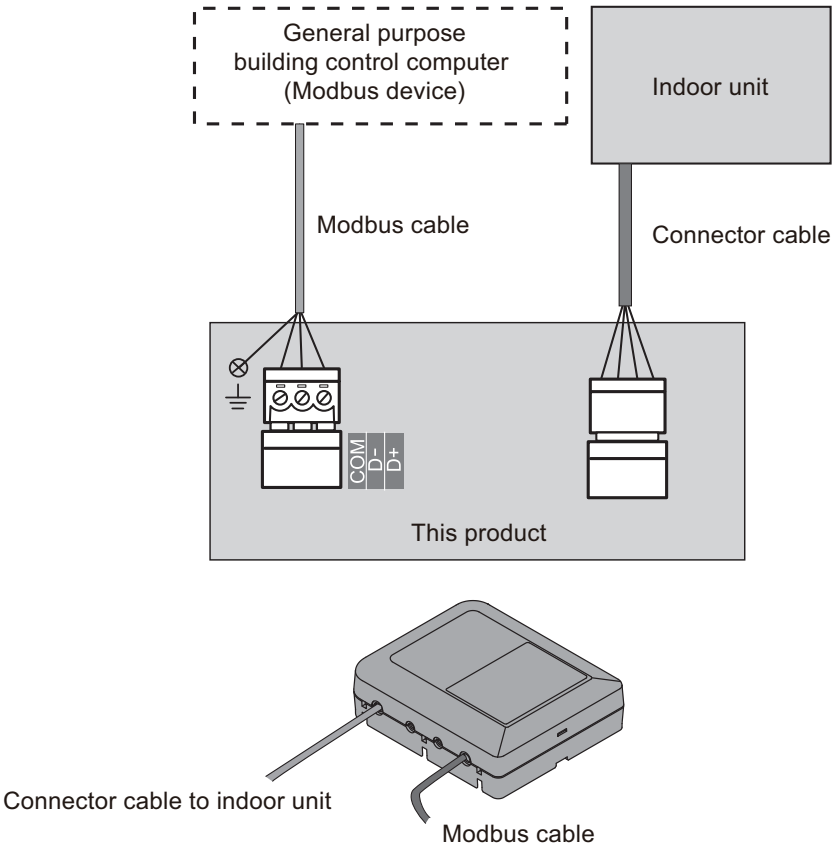

CONTROL SYSTEM

■ Functions

- **Indoor unit control**
  Commands from Modbus network are sent to the respective indoor units.
  (Modbus network → indoor units)

- **Indoor unit status monitoring**
  Indoor unit status is communicated to the Modbus network in the form of indoor unit variables.
  (Modbus network ← indoor units)

● Control and monitoring items

Item	Function	Description
Indoor unit control	On/Off Command*	Start/Stop operation
	Operation mode setting	Cooling/Heating/Auto/Fan/Dry
	Temperature setting	Set room temperature
	Airflow mode setting	Set airflow
	Thermostat off setting*	Thermostat off (Only one controller in VRF network system can do this.)
	Centrally control (Filter reset)	Prohibition of filter sign reset of remote controller
	Centrally control (All mode)	Prohibition of all mode of remote controller
	Centrally control (Timer mode)	Prohibition of timer mode of remote controller
	Centrally control (Set temperature mode)	Prohibition of set temperature mode of remote controller
	Centrally control (On/Off mode)	Prohibition of On/Off mode of remote controller
	Centrally control (On mode)	Prohibition of On mode of remote controller
	Centrally control (Operation mode)	Prohibition of operation mode of remote control
	Filter sign reset	Set filter sign reset command
	Anti-freeze setting	Set anti-freeze command
	Energy save mode setting	Set energy save command
	Vertical/Horizontal airflow direction louver setting	Set Vertical/Horizontal airflow direction louver
	Human detection auto save	Set human detection auto save
	Human detection auto off	Set human detection auto off

CONTROL SYSTEM

Item	Function	Description
Indoor unit monitoring	On/Off Status*	The indoor unit which is now operating can be monitored in all indoor units
	Operation mode setting status	Cooling/Heating/Auto/Fan/Dry mode status
	Temperature setting status	Room set temperature status
	Airflow mode setting status	Airflow mode status
	Set point temperature limit status	Room set temperature limit status
	Thermostat off setting status*	Thermostat off set value status
	Centrally control (Filter reset) status	Remote controller filter reset prohibition status
	Centrally control (All mode) status	Remote controller all mode prohibition status
	Centrally control (Timer mode) status	Remote controller timer mode prohibition status
	Centrally control (Set temperature) status	Remote controller set temp. prohibition status
	Centrally control (On/Off) status	Remote controller On/Off prohibition status
	Centrally control (On) status	Remote controller On prohibition status
	Centrally control (Operation) status	Remote controller operation prohibition status
	Anti-freeze setting status	Anti-freeze setting status
	Energy save mode setting status	Energy save mode set status
	Filter sign reset status	Filter sign reset status
	Room temperature status	Room temperature status
	Error code status	Error code status can be monitored.
	Vertical/Horizontal airflow direction louver status	Vertical/Horizontal airflow direction louver status
	Indoor unit status	Defrost/oil recovery/pump down can be monitored.
	Human detection auto save	Set human detection auto save status
	Human detection auto off	Set human detection auto off status
	Demand status	Demand control status
Convertor unit monitoring	Error code Status	Error code status
	Modbus communication setting information	Baud rate/slave address can be monitored.
	Model name	Convertor model name can be confirmed.
	Software version	Convertor software version can be confirmed.

NOTES:

- For detailed information, refer to the interface specification posted on “Service & Supports” page of the web site.
  https://www.fujitsu-general.com/global/support/
- *: To protect the compressor of the outdoor unit, carefully read and understand the following caution that may affect the operation of compressor before executing the setting.

⚠ CAUTION

When performing periodical settings like schedule settings for the following functions, perform the setting to all indoor units in the same refrigerant system simultaneously, conforming to the timing restriction described below.

<Corresponding function>

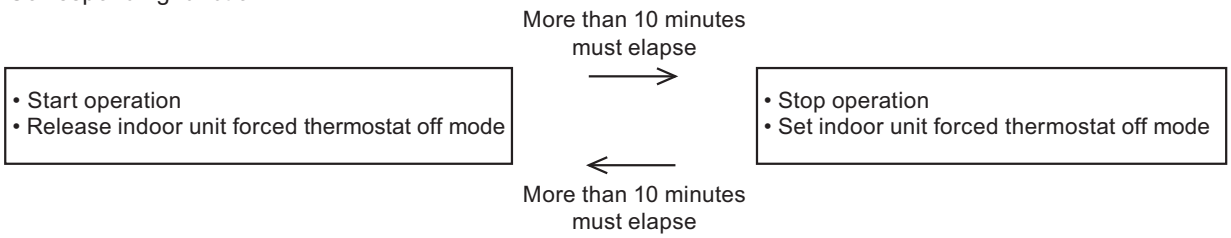

CONTROL SYSTEM

■ Dimensions

Unit: mm

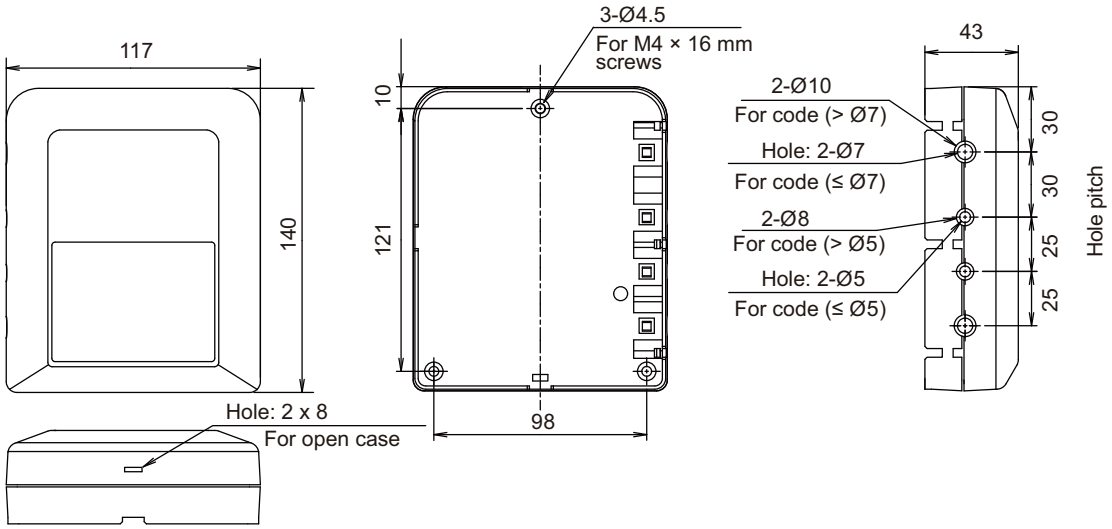

■ Specifications

Input power		W	1.2
Temperature	Operating	°C	0 to 46
	Packaged	°C	-10 to 60
Humidity	Packaged	%	0 to 95 (RH) No condensation
Dimensions (H × W × D)		mm	43 × 117 × 140
Weight		g	200

● Wiring specifications

Use	Cable size	Wire type	Remarks
Modbus cable	0.128 to 1.25 mm^2 (26 to 16 AWG)	AWG16—26 Polar 3 core + Sheathed PVC cable	

● Transmission specifications

Transfer mode		RTU mode
Communication method		Half-duplex operation, Master/Slave method
Communication speed	bps	9,600/19,200
Synchronous system		Asynchronous communication method
Data bit	bit	8
Parity		even/odd/none
Stop bit	bit	2 (no parity)/1
Network		3 wire RS485
Maximum cable length	m	1,000

CONTROL SYSTEM

3-9. BACnet gateway (Hardware: UTY-VBGX)

- The convertor for connecting VRF network system to the BMS system using BACnet protocol.
- Maximum of 128 indoor units can be connected to one BACnet gateway.
- VRF system can be centrally controlled or monitored by BMS via BACnet gateway (UTY-VBGX).
- Maximum of 4 BACnet gateway can be connected to one BMS.

■ Accessory

Name and shape	Q'ty	Application
USB memory	1	Includes the software and manuals of tool for BACnet gateway
Connector cable	1	For initial setting tool
Dust proof bushing	2	For connecting the power supply cable

■ Other required devices (Locally purchased)

- To install tool for BACnet gateway, personal computer that satisfies the following system requirements is necessary.

Personal computer system requirement	
Operating system	• Microsoft Windows 10 Home (32-bit or 64-bit) • Microsoft Windows 10 Pro (32-bit or 64-bit)
Memory	1 GB or more
Display	1,024 × 768 or higher resolution, 16-bit or higher color
Interface	USB port (× 1)
Software	Adobe Reader 9.0 or later

CONTROL SYSTEM

■ System diagram

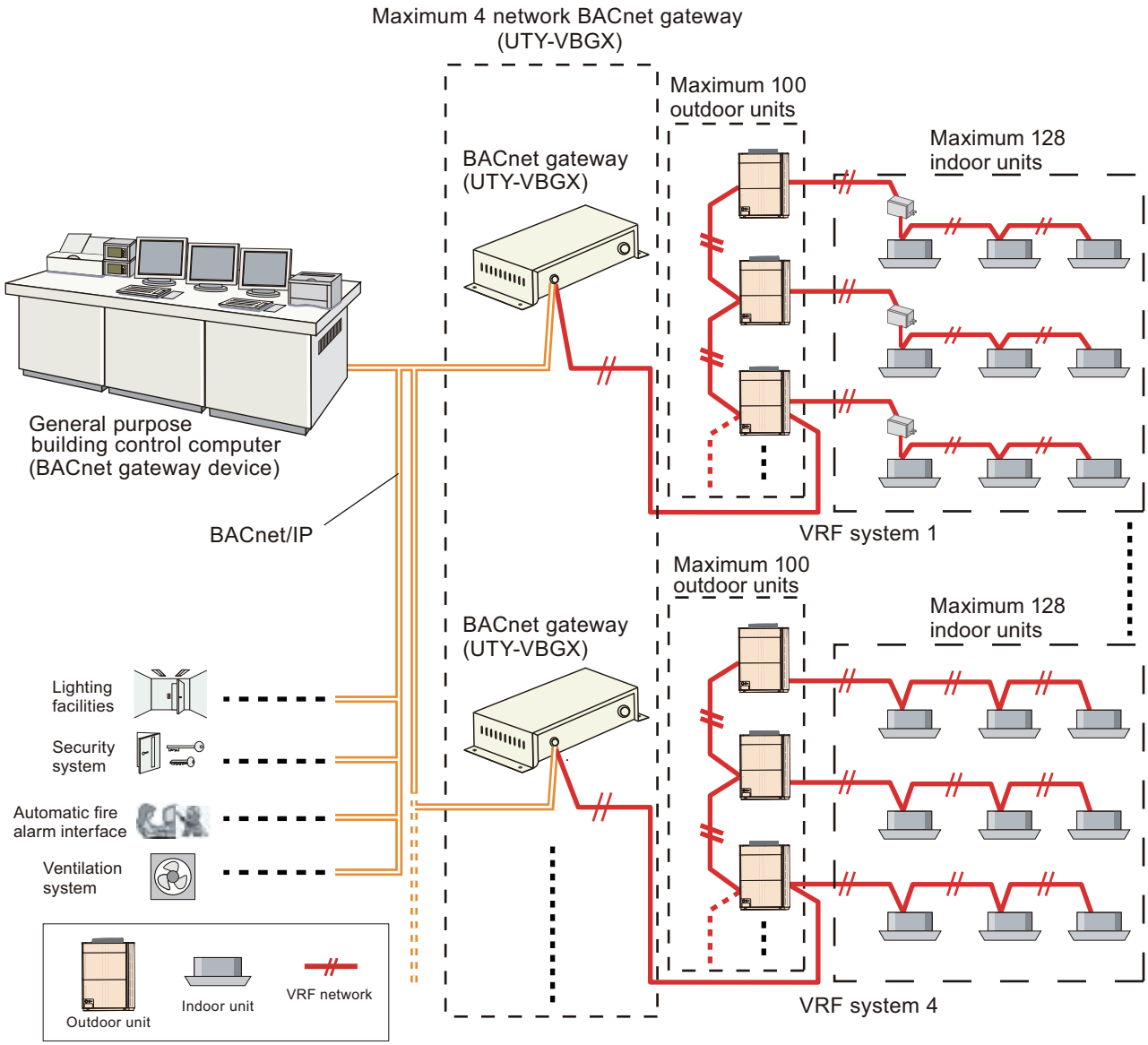

NOTE: BACnet gateway (Hardware) and BACnet gateway (Software) cannot co-exist within a VRF system.

CONTROL SYSTEM

■ Component location of PCB

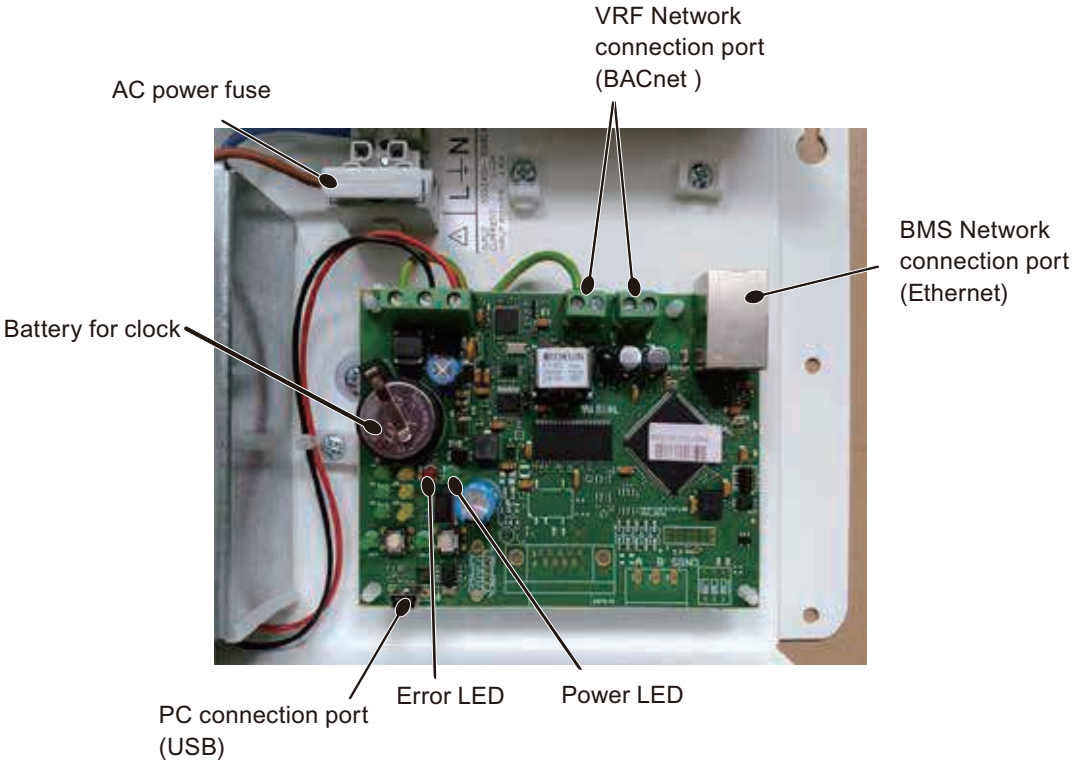

NOTE: Ensure proper space for all connectors when mounted.

⚠ CAUTION

Risk of explosion if battery is replaced by an incorrect type. Dispose of used batteries according to the instructions.

Important

Tight the power supply and the Lon cables to one of the 4 cable tie holes fixed to the casing with the plastic ties inside the BACnet gateway (Hardware). Do not use 2 holes to tie one cable.

- **Power supply**
  Connect mains to the power supply connector as:
  – Brown: Line (L)
  – Yellow: Earth/Ground (E)
  – Blue: Neutral (N)

- **Ethernet/BACnet IP (UDP)/Console (UDP and TCP)**
  Connect the cable coming from the IP network to the connector ETH of the gateway. Use an Ethernet CAT5 or higher cable.

- **VRF network**
  Connect the Lon bus to connectors A (+), B (-) and (SNGD) of gateway's PCB.

- **Console port**
  Connect a mini-type B USB cable from your computer to the gateway to allow communication between the configuration software and the gateway. Ethernet connection is also allowed for configuration.

CONTROL SYSTEM

■ Configuration procedure

The following procedures presume that all VRF indoor/outdoor units are commissioned and operational, and that BACnet network toward the BMS workstation is operational.

1. Turn on the device.
   Power supply working with any of the voltage range allowed is necessary. Once connected the Power LED will turn on.

2. Connect to BACnet interface.
   Connect the communication cable coming from the network hub or switch to the Ethernet port of the gateway. The cable to be used is a straight Ethernet STP CAT5 or higher cable.
   In case there is no response from the BACnet devices to the frames sent by gateway, check that they are operational and reachable from the network connection used by the gateway.
   Check the gateway Ethernet interface sending pings to its IP address using a PC connected to the same Ethernet IP network. If the problem persists communicating through the LAN of the building, contact the network administrator.
   BACnet gateway for VRF systems comes with DHCP functionality enabled by default.

3. Connect to VRF network.
   Use the Lon connector in the left bottom corner of the gateway in order to connect the VRF network to BACnet gateway.

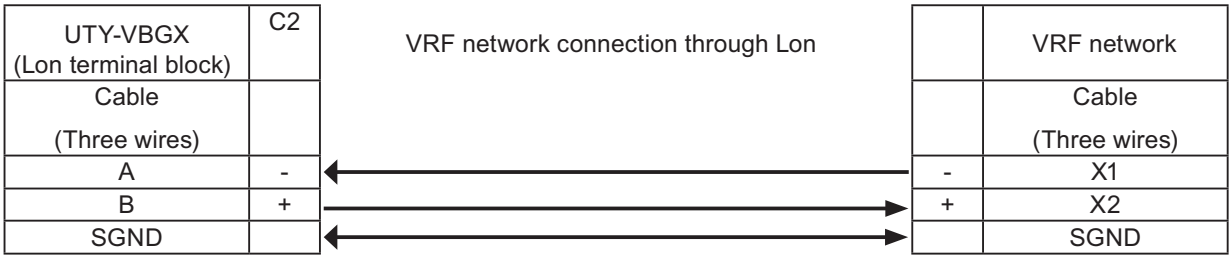

4. Connect to PC (Configuration tool).
   This action allows the user to have access to configuration and monitoring of the device. Two methods to connect to the PC can be used:
   - USB cable: To connect the device to the PC the USB cable supplied should be plugged to USB console port. (This method is recommended.)
   - Ethernet: Using ETH port of the gateway

   NOTE: Install the configuration tool to the PC before connecting to the gateway.

5. Execute the configuration tool from the PC and perform necessary settings.
   For details, refer to Instruction manual.

6. Create project, perform scan from the configuration tool, and check that all VRF indoor/outdoor units are detected and available, then write the project to the gateway.
   Refer to the *INSTRUCTION MANUAL* for detail.

7. Remove the USB cable from the gateway, and close the case.
   In this stage, BACnet gateway should be accessible from the BMS workstation. Integration of BACnet system is ready to be performed.

CONTROL SYSTEM

■ Electrical wiring

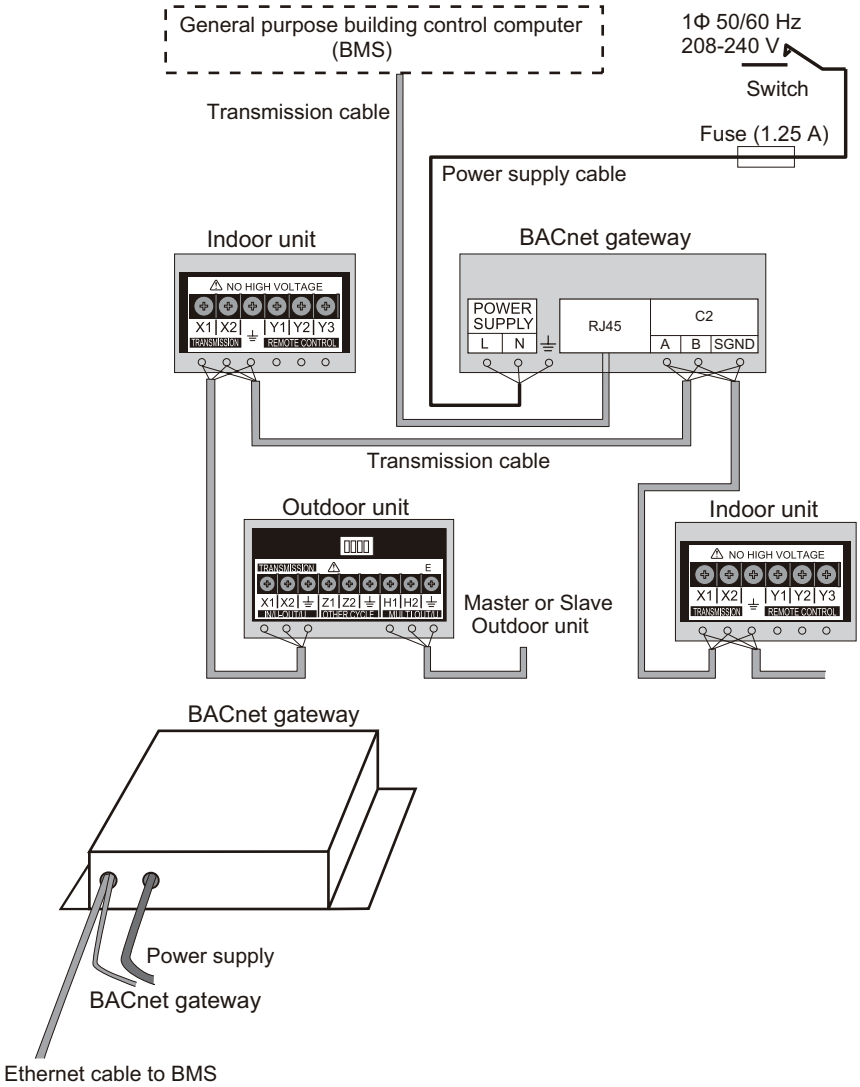

NOTES:

- Do not bind the power supply cable and transmission cable to avoid an erroneous operation.
- Use shield cable for transmission cable. The shield metal should be grounded.
- Do not forget to ground the BACnet gateway.

■ Functions

- **Indoor unit control**
  - Individual control
    Commands from BACnet network are sent to the respective indoor units.
    (BACnet network → respective indoor units of VRF network)

  - Batch control
    Commands from BACnet network are sent to all indoor units connected to VRF network.
    (BACnet network → All indoor units of VRF network)

- **Indoor unit status monitoring**
  Indoor unit status is communicated to the BACnet network in the form of BACnet objects.
  (BACnet network ← All indoor units of VRF network)

CONTROL SYSTEM

● Control and monitoring items with object types

Function name	Category			BACnet object type*1	Remarks
	Target	Monitor	Control		
Operation setting*2	Bat	—	○	BO	
Operation mode	Bat	—	○	MO	
Temperature setting	Bat	—	○	AO	
Fan speed	Bat	—	○	MO	
R/C prohibition	Bat	—	○	MO	
Gateway	GW	○	—	D	No monitor/control difference
Representative error	GW	○	—	BI	Gateway, Lon communication
Error code	GW	○	—	MI	Gateway, Lon communication Error codes to signal gateway status will be agreed with FGL during development.
Energy saving status/setting	GW	○	○	BI/BO	
Existence check	In	○	—	BI	
Temperature status/setting	In	○	○	AI/AO	
Operation status/setting	In	○	○	BI/BO	
Operation mode status/setting	In	○	○	MI/MO	
Fan speed status/setting	In	○	○	MI/MO	
Suction/Room temperature	In	○	—	AI	
Representative error	In	○	—	BI	
Error code	In	○	—	MI	
Temperature H/L limit status/setting	In	○	○	AI/AO	H/L limit per 3 operation Mode: HEAT, COOL-DRY, and AUTO
Temperature limit validity status/setting	In	○	○	BI/BO	
Filter sign status/reset	In	○	○	BI/BO	Only reset for control
Forced thermo off status/setting*3	In	○	○	BI / BO	
Emergency stop	In	○	—	BI	
R/C prohibition status/setting	In	○	○	MI/MO	
Vertical fan status/setting	In	○	○	MI/MO	
Horizontal fan status/setting	In	○	○	MI/MO	
Managed mode	In	○	—	MI	
Outdoor unit save status/setting	Out	○	○	MI/MO	
Low noise operation status/setting	Out	○	○	MI/MO	Monitor not supported by all
Representative error	Out	○	—	BI	
Error code	Out	○	—	MI	
Forced off status/setting	Out	○	○	BI/BO	

CONTROL SYSTEM

NOTES:

- For detailed information, refer to the instruction manual posted on “Service & Supports” page of the web site.
  https://www.fujitsu-general.com/global/support/
- *1: BACnet object type
  - BI: OBJECT_BINARY_INPUT
  - BO: OBJECT_BINARY_OUTPUT
  - MI: OBJECT_MULTISTATE_INPUT
  - MO: OBJECT_MULTISTATE_OUTPUT
  - AI: OBJECT_ANALOG_INPUT
  - AO: OBJECT_ANALOG_OUTPUT
  - D: OBJECT_DEVICE
- *2: To protect the compressor of the outdoor unit, carefully read and understand the following caution that may affect the operation of compressor before executing the setting.

⚠ CAUTION

When performing periodical settings like schedule settings for the following functions, perform the setting to all indoor units in the same refrigerant system simultaneously, conforming to the timing restriction described below.

<Corresponding function>

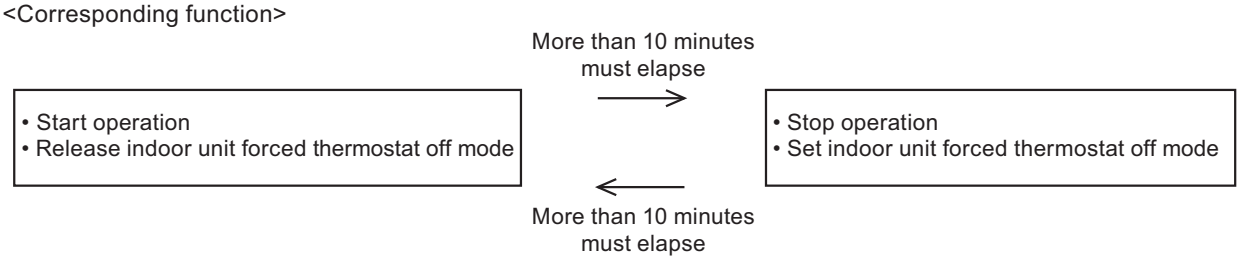

- *3: Forced thermostat off instruction
  - Only one equipment can send these instructions for each refrigerant system.
  - When these instructions are sent by multiple equipment, the system may not respond as instructed or may cause malfunction.

CONTROL SYSTEM

■ Dimensions

Unit: mm

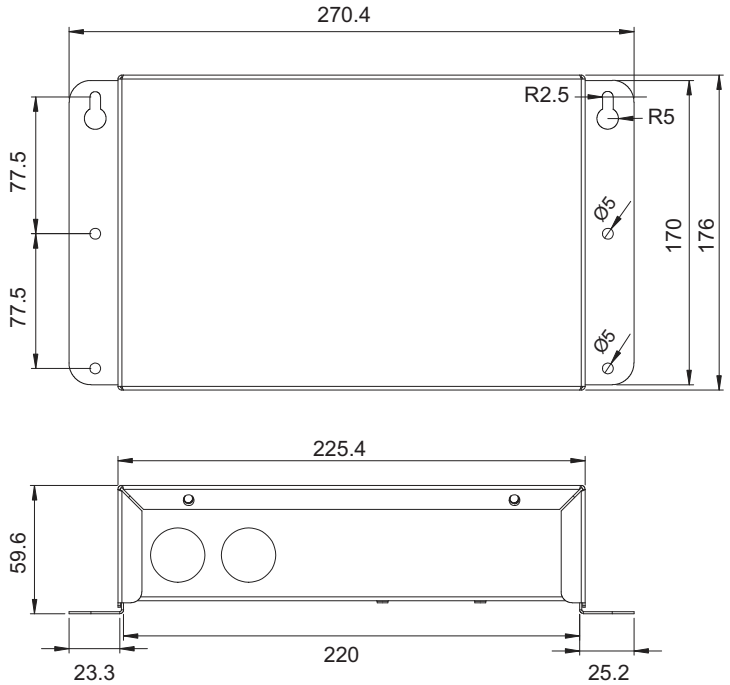

■ Specifications

Power supply		V	1 Ø AC 208—240
Power source frequency		Hz	50/60
Input power		W	4.6
Temperature	Operating	°C	0 to 46
	Packaged	°C	-10 to 60
Humidity	Packaged	%	5 to 95 (RH) No condensation
Dimensions (H × W × D)		mm	60 × 270 × 176
Weight		g	1,200
Fuse capacity		A	1.25

● Wiring specifications

Use	Cable size	Wire type	Remarks
Power supply cable	0.5 to 1.25 mm^2 (20 to 16 AWG)	60245 IEC 57 or equivalent	1 Ø AC 208—240 V 50/60 Hz, 2 wire + ground (Always ground the unit)
Transmission cable	Ethernet category 5 or higher STP LAN cable with RJ45		Straight cable

● Transmission specifications

BACnet/IP (ASHRAE 135 Annex J)		
Transmission speed	Mbps	10/100
Cable		Ethernet category 5 or higher STP 22 AWG equivalent
Network connector		RJ45

CONTROL SYSTEM

3-10. BACnet gateway (Software: UTY-ABGXZ1)

- It is possible to connect medium to large sized BMS to VRF network system via BACnet, a global standard for open networks.
- A Maximum of 1,600 indoor units with 4 VRF network systems (a maximum of 400 indoor units and 100 outdoor units for one network system) can be connected to one BACnet gateway.
- It is possible to control or monitor VRF network system from BMS via BACnet gateway.
- Compatible with BACnet (ANSI/ASHRAE-135-2012) application specific controller (B-ASC).
- Compatible with BACnet/IP over Ethernet.
- Scheduling function, alarm and event functions, electricity charge apportionment functions as well as energy saving function are provided in BACnet gateway.
- Connection between VRF network system to personal computer is possible via small U10 USB interface. However, both U10 USB interface and personal computer are locally purchased items.

■ Accessory

Name and shape	Q'ty	Application
 WHITE-USB-KEY (Software protection key with software)	1	Includes the software and manuals of tool for BACnet gateway. Additionally, it works as the software protection key. Software protection key to be connected to an USB port on the PC that the BACnet gateway is installed. BACnet gateway runs only on a PC with this WHITE-USB-KEY.

■ Other required devices (Locally purchased)

- To install tool for BACnet gateway, personal computer that satisfies the following system requirements is necessary.

Personal computer system requirement	
Operating system	• Microsoft Windows 7 Home Premium (32-bit or 64-bit) SP1 • Microsoft Windows 7 Professional (32-bit or 64-bit) SP1 • Microsoft Windows 8.1 (32-bit or 64-bit) • Microsoft Windows 8.1 Pro (32-bit or 64-bit) • Microsoft Windows 10 Home (32-bit or 64-bit) • Microsoft Windows 10 Pro (32-bit or 64-bit) Supported languages: English, Chinese, French, German, Russian, Spanish, and Polish
CPU	Intel Core i3 2 GHz or higher
Memory	• 2 GB or more (for Windows 7 [32-bit]) • 4 GB or more (for Windows 7 [64-bit], Windows 8.1, and Windows 10)
HDD	40 GB or more of free space
Display	1,024 × 768 or higher resolution
Interface	• Ethernet port (for getting access to the Internet using LAN) or Modem (for getting access to the Internet using public telephone line) • USB ports (Maximum of 5 ports) (Required only for the server PC that works as VRF controller) – Maximum of 1 USB ports are required for WHITE-USB-KEY connection – Maximum of 4 USB ports are required for Echelon U10 USB Network Interface **NOTE:** Maximum number of required USB ports depends on the applicable system configuration.
Software	Adobe Reader 9.0 or later

- Echelon U10 USB Network Interface – TP/FT-10 Channel (Model number: 75010R) (Required for each VRF network)

CONTROL SYSTEM

■ System diagram

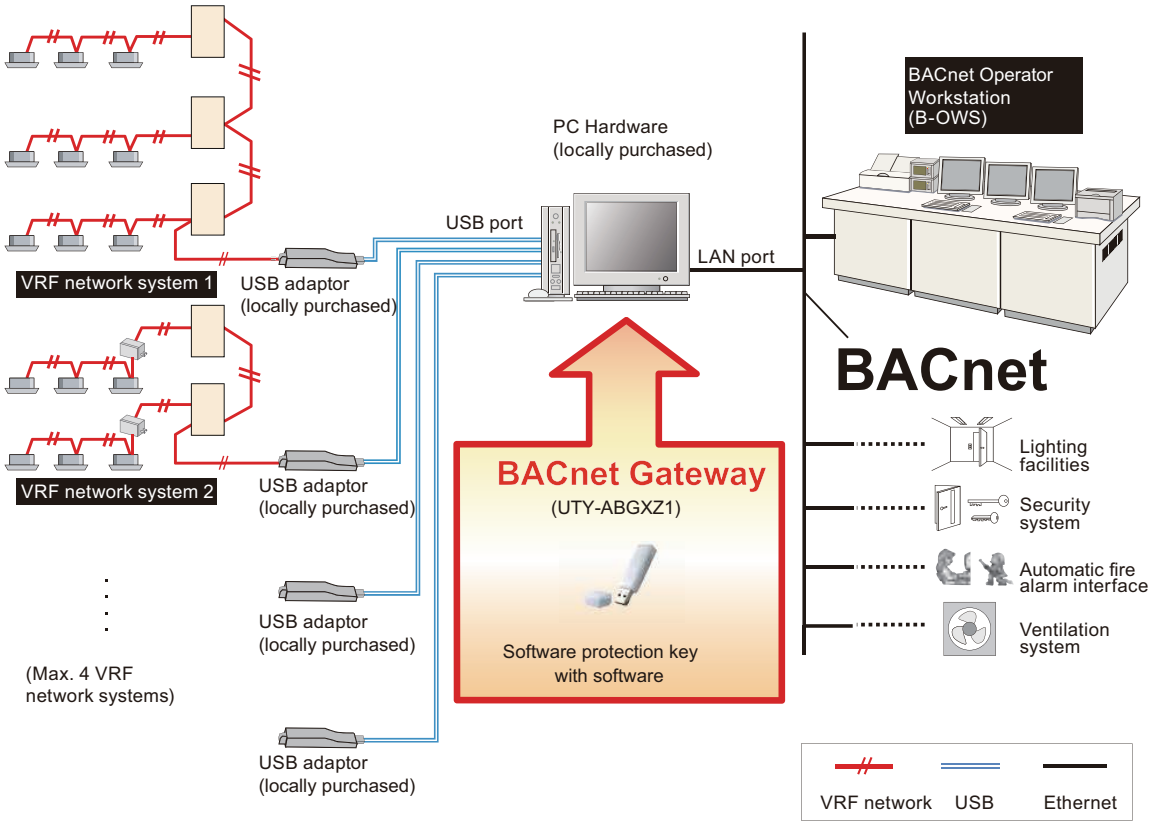

■ Functions

- **Indoor unit control (Output object)**
  Commands from BMS are sent to the respective indoor units via BACnet gateway.
  (BMS → BACnet gateway → respective indoor units of VRF network system)

- **Indoor unit status monitoring (Input object)**
  Indoor unit status is communicated to the BMS via BACnet gateway.
  (BMS ← BACnet gateway ← respective indoor units of VRF network system)

- **Outdoor unit control (Output object)**
  Commands from BMS are sent to the respective outdoor units via BACnet gateway.
  (BMS → BACnet gateway → respective outdoor units of VRF network system)

- **Outdoor unit status monitoring (Input object)**
  Outdoor unit status is communicated to the BMS via BACnet gateway.
  (BMS ← BACnet gateway ← respective outdoor units of VRF network system)

CONTROL SYSTEM

● BACnet Object list

• Type: Indoor

BACnet object type	Code (II)	Function name	Unit						
			Inactive	Active					
			Text-1	Text-2	Text-3	Text-4	Text-5	Text-6	Text-7
AI	10	Set temp. status	Degree						
	11	Space temp.	Degree						
	12	Auto temp. (Low limit status)	Degree						
	13	Auto temp. (High limit status)	Degree						
	14	Cool/Dry temp. (Low limit status)	Degree						
	15	Cool/Dry temp. (High limit status)	Degree						
	16	Heat temp. (Low limit status)	Degree						
	17	Heat temp. (High limit status)	Degree						
AO	10	Temp. setting	Degree						
	11	Auto temp. (Low limit setting)	Degree						
	12	Auto temp. (High limit setting s)	Degree						
	13	Cool/Dry temp. (Low limit setting)	Degree						
	14	Cool/Dry temp. (High limit setting)	Degree						
	15	Heat temp. (Low limit setting)	Degree						
	16	Heat temp. (High limit setting)	Degree						
AV	10	ECA* operation data							
BI	10	Operation status	OFF	ON					
	14	Filter sign status	Unsigned	Signed					
	15	Indoor unit error status	Normal	Fault					
	16	Anti-freeze operation status	Reset	Set					
	17	SAVE operation status	Normal	SAVE					
	18	Forced thermostat off status	Reset	Set					
	19	Emergency stop status	Normal	Stop					
	20	Mode mismatch status	Normal	Mismatch					
	21	Protect anti-freeze status	Reset	Set					
	22	Temp. limit valid status	Invalid	Valid					
BO	10	Operation setting	OFF	ON					
	14	Filter sign resetting	Reset	Not reset					
	15	Anti-freeze operation setting	Reset	Set					
	16	SAVE operation setting	Reset	Set					
	17	Forced thermostat OFF setting	Reset	Set					
	18	Emergency stop setting	Reset	Set					
	19	Temp. limit valid setting	Invalid	Valid					
MI	10	Operation mode status	COOL	HEAT	FAN	DRY	AUTO		
	11	Fan speed status	LOW	HIGH	MED	AUTO	QUIET	MED-LOW	MED-HIGH
	12	Indoor unit error code	Refer to FGL original error code						
	13	R.C. prohibition status	Refer to R.C. prohibition setting chart						
	14	Vertical airflow direction status	1	2	3	4	SWING		
	15	Horizontal airflow direction status	1	2	3	4	5	SWING	
	16	Special driving status	Normal	Defrost	Oil recovery				
	17	Managed mode	None	Master	Slave	External			
MO	10	Operation mode status	COOL	HEAT	FAN	DRY	AUTO		
	11	Fan speed setting	LOW	HIGH	MED	AUTO	QUIET	MED-LOW	MED-HIGH
	12	R.C. prohibition setting	Refer to R.C. prohibition setting chart						
	13	Vertical airflow direction setting	1	2	3	4	SWING		
	14	Horizontal airflow direction setting	1	2	3	4	5	SWING	
TL	10	ECA* operation data log							

*: Electricity charge apportionment

• Type: Outdoor

BACnet object type	Code (II)	Function name	Unit							
			Inactive	Active						
			Text-1	Text-2	Text-3	Text-4	Text-5	Text-6	Text-7	Text-8
BI	30	Outdoor unit error status	Normal	Fault						
	31	Forced off status	Reset	Set						
BO	30	Forced off setting	Reset	Set						
MI	30	Outdoor unit priority operation status*1	COOL	HEAT	Neautral	None				
	31	Outdoor error code	Refer to FGL original error code							
	32	Capacity save status	Not set	100%	90%	80%	70%	60%	50%	40%
	33	Outdoor low noise operation status*2								
MO	30	Outdoor low noise operation status*3	Stop	Level-1 Quiet	Level-1 Ability	Level-2 Quiet	Level-2 Ability	Level-3 Quiet	Level-3 Ability	
	32	Capacity save setting	Not set	100%	90%	80%	70%	60%	50%	40%

- *1: Priority operation status is for Heat pump type VRF. In other types of systems, this status is not necessary.
- *2: Refer to the “Outdoor unit low nose operation value table” for the texts used with the “Outdoor low noise operation status”.
- *3: Outdoor unit firmware may need to be updated for this function to work. For details, contact your local sales company.

CONTROL SYSTEM

- **Type: Gateway**

BACnet object type	Code (II)	Function name	Unit					
			Inactive	Active				
			Text-1	Text-2	Text-3	Text-4	Text-5	Text-6
Device	—	Device information						
BI	00	Lon network adapter error status	Normal	Abnormal				
	01	Gateway status error	Normal	Abnormal				
	02	ES status	Not used	Energy saving				
BO	02	ES setting	Not used	Energy saving				
MI	00	Lon network adapter error code	Refer to FGL original error code					
	01	Gateway error code	Refer to FGL original error code					
	02	ECA* status	Invalid	Invalid (Stop)	Include indoor unit only	Exclude indoor and RB unit	Include indoor and RB unit	Include RB unit
MO	01	ECA* setting	Stop	Include indoor unit only	Exclude indoor and RB unit	Include indoor and RB unit	Include RB unit	
Notification	00—99	Notification class						
CAL	00	Calendar “Holiday-1”						
	01	Calendar “Holiday-2”						
	02—32	Calendar “Special day-1”—”Special day-30”						
Schedule	00—99	Schedule timer						
*: Electricity charge apportionment								

NOTES:

- To protect the compressor of the outdoor unit, carefully read and understand the following cautions that may affect the operation of compressor before executing the setting.

⚠ CAUTION

- When regularly making the following settings to the same outdoor unit by using schedule function etc., leave the following interval.

  <Corresponding function>

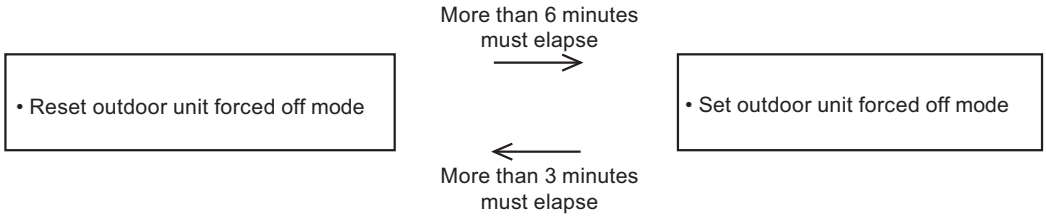

- When performing periodical settings like schedule settings for the following functions, perform the setting to all indoor units in the same refrigerant system simultaneously, conforming to the timing restriction described below.

  <Corresponding function>

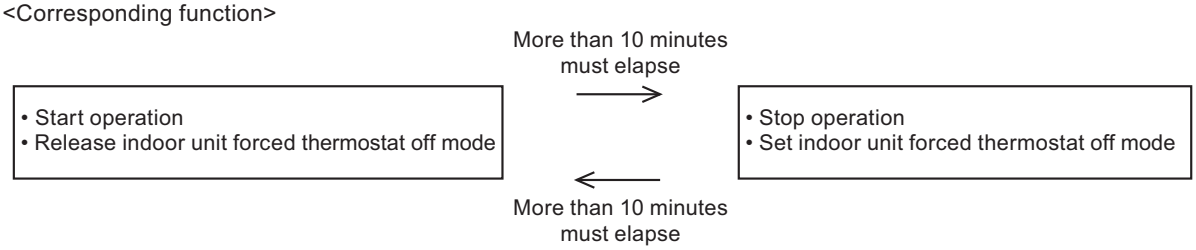

- Forced thermostat off instruction, outdoor unit forced off instruction, and capacity saving setting
  - Only one equipment can send these instructions for each refrigerant system.
  - When these instructions are sent by multiple equipment (eg. from System controller and BACnet gateway at the same time), the system may not respond as instructed or may cause malfunction.

- The electricity charge apportionment function of VRF system can only be performed from one equipment simultaneously. Therefore, ECA setting, required to be set before performing electricity charge apportionment, can only be sent from one equipment simultaneously.

- The energy saving function of VRF system can only be performed from one equipment simultaneously. Therefore, ES setting, required to be set before performing energy saving, can only be sent from one equipment simultaneously.

CONTROL SYSTEM

■ Installation procedure

Before installation, connect between the VRF network system and the USB adapter.

For details of installation, refer to the instruction manual.
Brief installation steps are follows:

1. Install an appropriate driver for the USB adapter to the PC.
   In this step, do not connect the USB adapter to the PC.

2. Install the BACnet gateway (application software) to the PC.

3. Restart the PC.

4. After restarting the PC, make sure that the USB adapter, WHITE-USB-KEY, and Ethernet cable for the BACnet gateway are connected to the PC.

5. Start the application.

6. Configure necessary settings for startup operation as follows:
   a. Perform all necessary initial settings such as IP address, etc. Then, click OK button.
      Adapter setting window appears automatically.

   b. Select the connected adapter and click OK button. Then unit registration window appears and starts scanning all connected units automatically.

   c. After finishing the scanning, click OK button.
      Gateway execution window appears on the display when the startup operation is completed.

7. Arrange the information between BMS and BACnet gateway using the read property service, etc.

CONTROL SYSTEM

3-11. Wireless LAN adapter (UTY-TFSXZ1)

By installing FGLair on a smart device, several functions can be controlled from outside the house.

■ Accessory

Name and shape	Q'ty	Application
EMI core	1	For details on use and method of installation, refer to the indoor unit installation manual.
Screw (M4 × 25 mm)	2	For mounting the wireless LAN adapter.
Wireless LAN label	1	
Setting manual	1	
Operation manual (CD-ROM)	1	

CONTROL SYSTEM

■ System diagram

One WLAN adapter can be connected to each indoor unit.

Single system

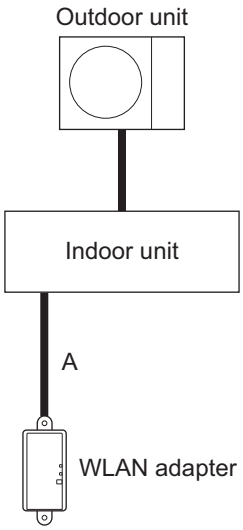

Multiple system

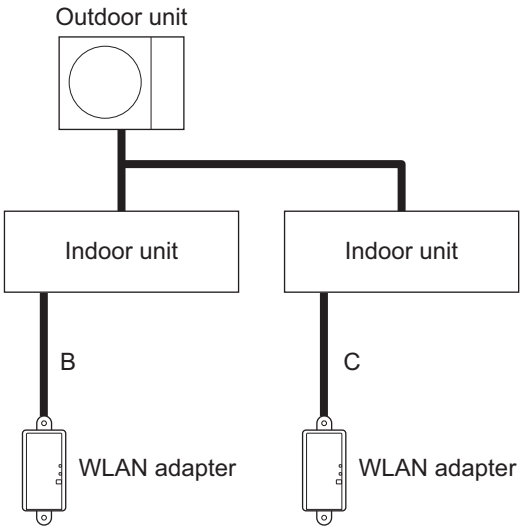

A, B, and C: Attached cable with this product.

CONTROL SYSTEM

Prohibited uses:

(1) Group connection of indoor units with wired remote controller

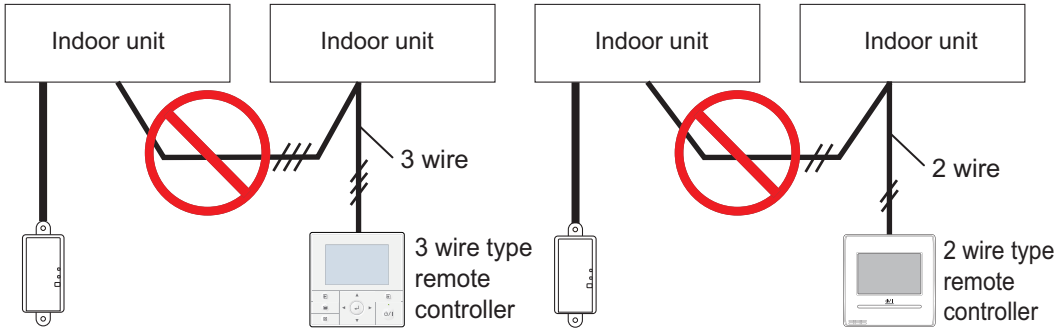

(2) Group connection of indoor units

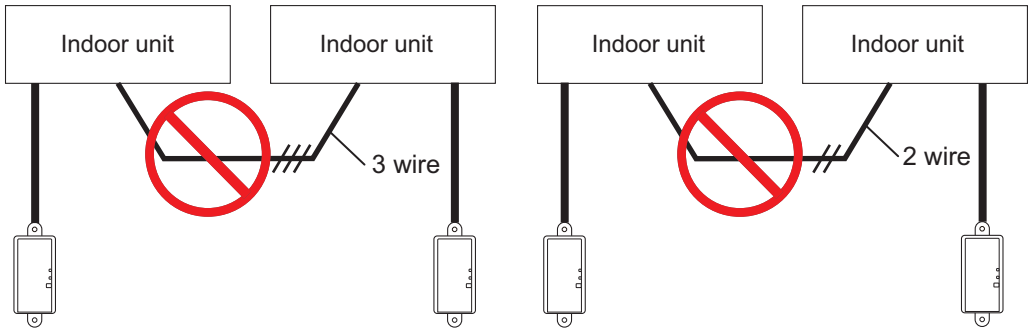

(3) Group connection of indoor units with WLAN adapter cable.

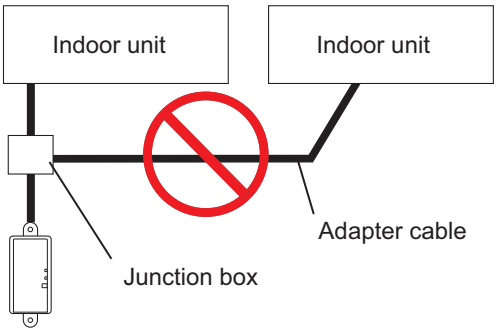

(4) Extended wiring
Extending the cable is prohibited.

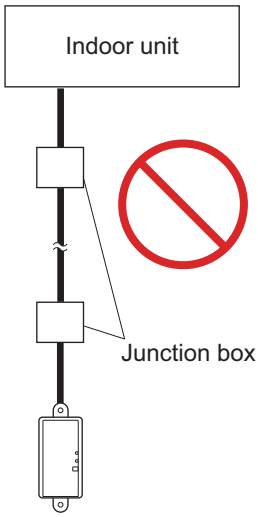

CONTROL SYSTEM

CONTROL SYSTEM

■ Dimensions

Unit: mm

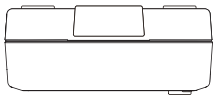

Top view

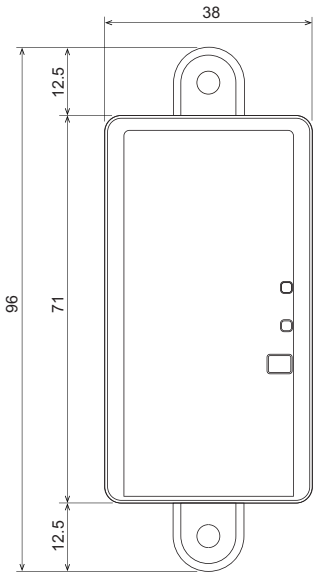

Top view

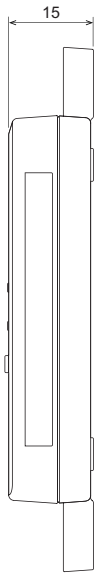

Side view

■ Installation

1. With referring the setting manual, perform wire connection.

2. Install the WLAN adapter in the direction as shown in this figure. If the WLAN adapter is installed in the wrong direction, water may get into the adapter through the wire, causing failure.

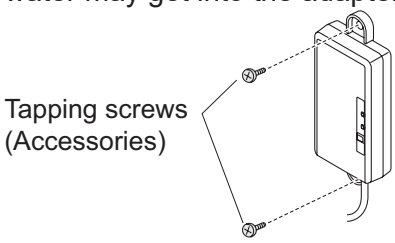

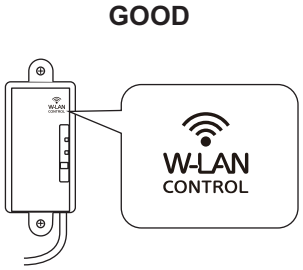

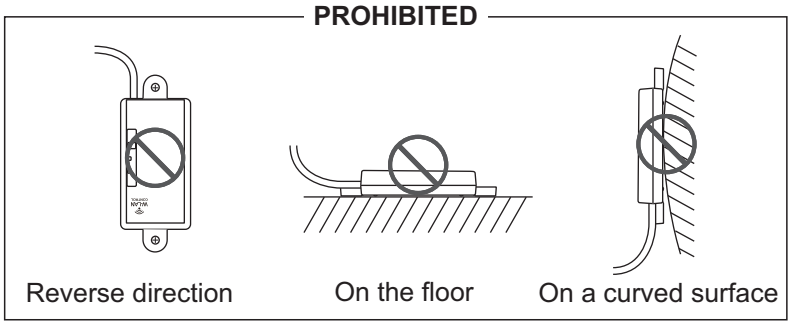

3. Connect the remote controller cable to the connecting cable, and insert it to the connector. Set the DIP switch (SW1) on the PCB of indoor unit to “2WIRE”.

CONTROL SYSTEM

■ Specifications

Maximum radio-frequency power		mW	80
Dimensions (H × W × D)	Net	mm	71 × 38 × 15
	Gross		207 × 138.5 × 50
Weight	Net	g	35 (without cable)
	Gross		380
Operation temperature range		°C	0 to 46

● System requirement

Before using this function, prepare the following items:

- **Wireless router:**

Wireless LAN standard	IEEE802.11b/g/n
Frequency bands*	• U.S.A., Canada: 2.4 GHz (1ch—11ch) • Other countries: 2.4 GHz (1ch—13ch)
Network security standard	• Open • WEP • WPA (PSK) • WPA2 Personal (PSK) • WPS for same-LAN registration

*: Usable only in the country or region where you purchased the product.
To check whether your wireless router complies with the network security standards listed above, refer to the operation manual.

- **Smartphone or Tablet PC:**

App-compliant operating system	iOS	Check the latest version of supported OS at Google Play store or App Store.
	Android	

- **FGLair™ (mobile application):**
Mobile app is available on Google Play store or on App Store.
After installation of mobile app, user registration is required. For user registration and setup information, refer to Setting Manual attached with the product.

For the latest version of the Wireless LAN (WLAN) control manuals, refer to the following web site.
https://www.fujitsu-general.com/global/support/

CONTROL SYSTEM

● Wireless LAN function list

NOTE: To use Wireless LAN control, user registration in advance and access to the wireless home network are required.

Item			Mobile app
Air conditioning control function	Operation on/off		○
	Operation mode setting		○
	Set temperature setting		○
	Fan speed setting		○
	Airflow direction setting*1	Louver position adjustment (vertical/horizontal)	○
		Swing (vertical/horizontal)	○
	Timer setting	Weekly timer*2	○
Additional function	ECONOMY operation setting		○
	Room temperature indication*3		○
App function	Air conditioner error e-mail notification		○

○: Available, —: Not available

*1: Different by the indoor unit function.

*2: Each of weekly timer of wireless/wired remote controller and mobile application has different settings. If timer settings are done from mobile application and from wireless remote controller/wired remote controller, both timer settings will be active.

*3: For using this function in VRF system, non-polar 2-wired remote controller needs to be connected to the indoor unit, and the room temperature sensor on the wired remote controller should be enabled.

CONTROL SYSTEM

3-12. Signal amplifier (UTY-VSGXZ1)

If the total length of transmission cable exceeds 500 m, or the number of the elements exceeds 64 units, Signal amplifier will be required.

- Transmission cable length can be extended up to 3,600 m with multiple Signal amplifier.
- Up to 8 Signal amplifier (Filter mode is off) can be installed in one VRF network system.
- Up to 40 Signal amplifier (Filter mode is on) can be installed in one VRF network system. (For Heat recovery system)

To prevent the drop of signal level by taking distance of length or quantity of unit in VRF network with installing Signal amplifier, signal level can be recovered.

■ Accessory

Name and shape	Q'ty	Application
Cable tie	3	For mounting the power supply cable and transmission cable
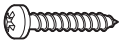 Screw (M4 × 20 mm)	4	For mounting the Signal amplifier
Terminal register	1	It is used when there is no terminal resistor in a segment.
Dust proof bushing	1	For connecting the power supply cable
Connecting wire	1	For setting the filter mode
Installation manual	1	

CONTROL SYSTEM

CONTROL SYSTEM

■ Electrical wiring

- **Except in the case of V and S series (indoor units is installed 320 units or less)**

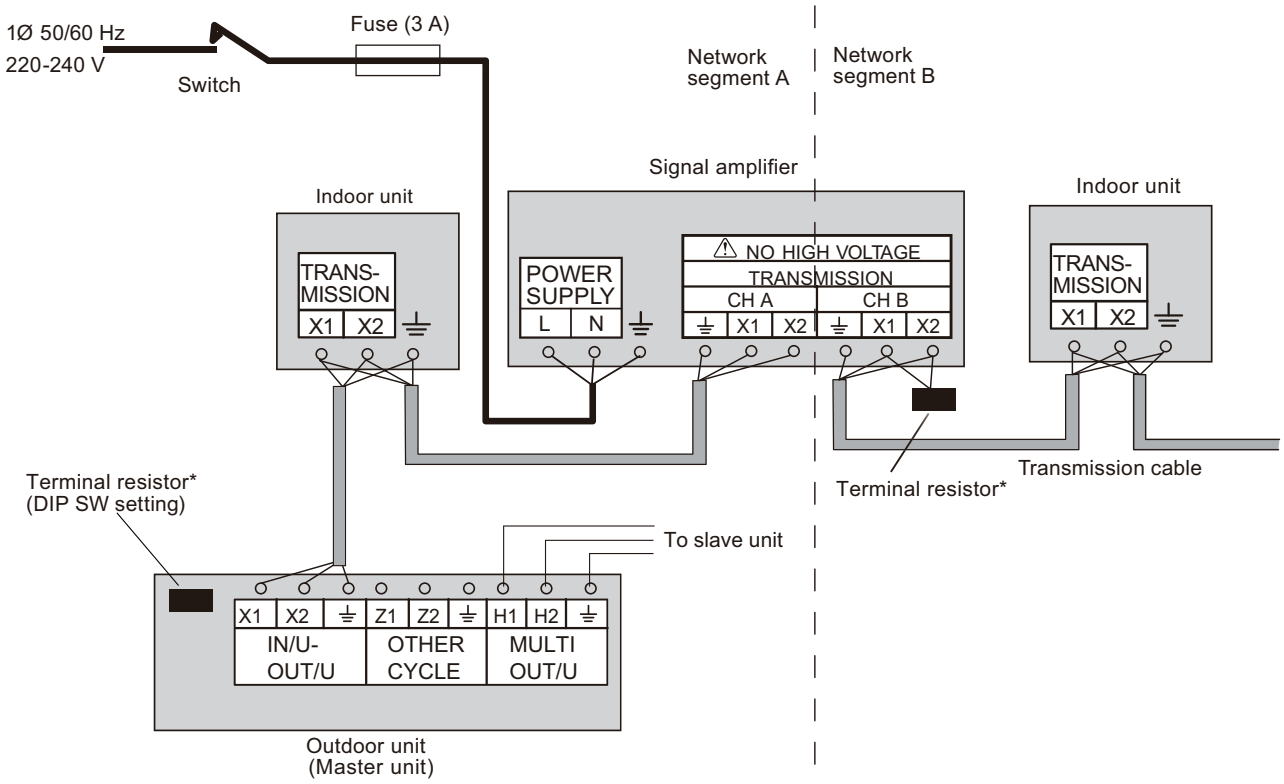

*: Make sure to install 1 piece of terminal resistor to each segment. Terminal resistor is provided for each outdoor unit, but confirm that there is only one terminal resistor in the same segment.

CONTROL SYSTEM

- **Case of VR-II (321 or more indoor units are installed)**

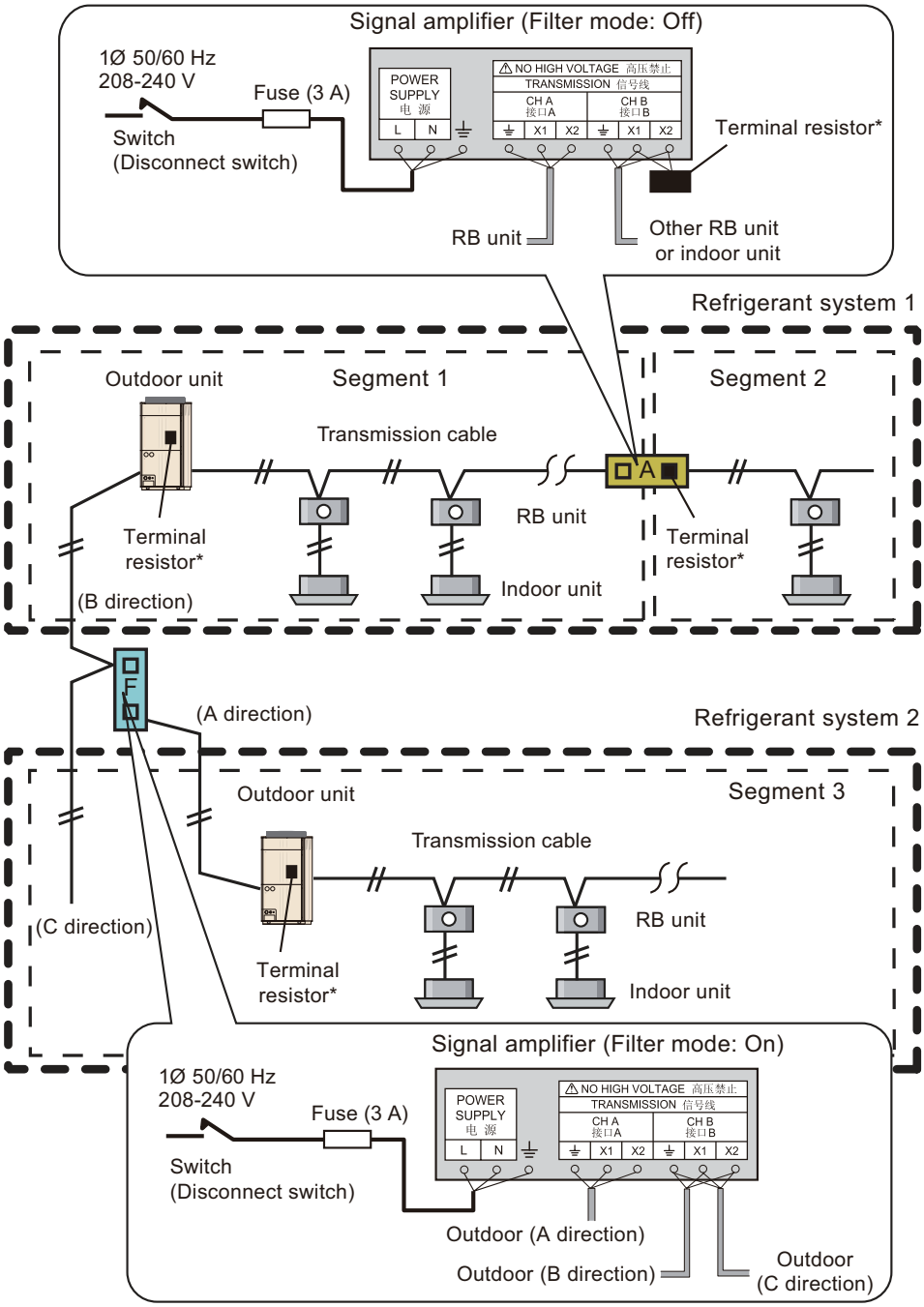

*: Make sure to install 1 piece of terminal resistor to each segment. Terminal resistor is provided for each outdoor unit, but confirm that there is only one terminal resistor in the same segment.

CONTROL SYSTEM

- **Filter mode setting**
  Set the filter mode to suppress an increase of the amount of communication information in the Heat recovery system.
  - Filter mode is turned on by inserting the accessory connecting wire at the CN4 connector on the PCB.
  - When the filter mode setting is changed, turn the power off once. Otherwise, the setting will not be recognized.

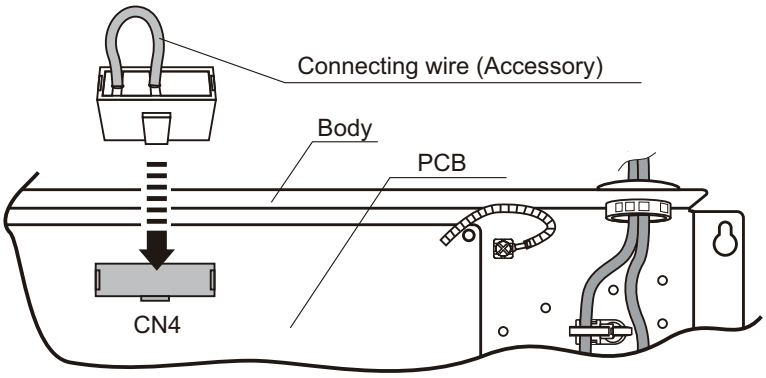

■ Dimensions

Unit: mm

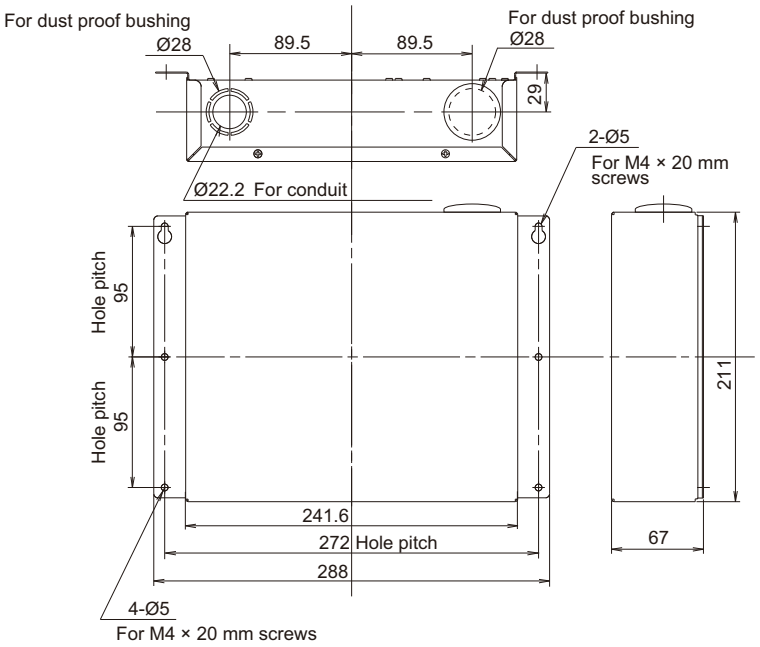

CONTROL SYSTEM

■ Specifications

Power supply		V	1 Ø AC 208—240
Power source frequency		Hz	50/60
Input power		W	4.5
Temperature	Operating	°C	0 to 46
	Packaged	°C	-10 to 60
Humidity	Packaged	%	0 to 95 (RH) No condensation
Dimensions (H × W × D)		mm	67 × 288 × 211
Weight		g	1,500
Fuse capacity		A	3

● Wiring specifications

Use	Cable size	Wire type	Remarks
Power supply cable	0.5 to 1.25 mm^2 (20 to 16 AWG)	60245 IEC 57 or equivalent	1 Ø AC 208—240 V 50/60 Hz, 2 wire + ground (Always ground the unit)
Transmission cable	0.33 mm^2 (22 AWG)	LEVEL 4 (NEMA) Non-polar 2 core, twisted pair solid core shielded	LonWorks compatible cable

CONTROL SYSTEM

3-13. External switch controller (UTY-TERX)

- Switching of air conditioner settings can be performed using an External switch controller and a third-party device.
- On/Off, temperature, fan speed, operating mode, and remote controller prohibition mode can be switched using external device, such as a room card-key.
- Card-key or other sensor switches are available as a locally purchased parts.

■ Accessory

Name and shape	Q'ty	Application
Cable tie	4	For securing controller cable
Screw (M4 × 16 mm)	3	For installing the External switch controller
Installation manual	1	

■ System diagram

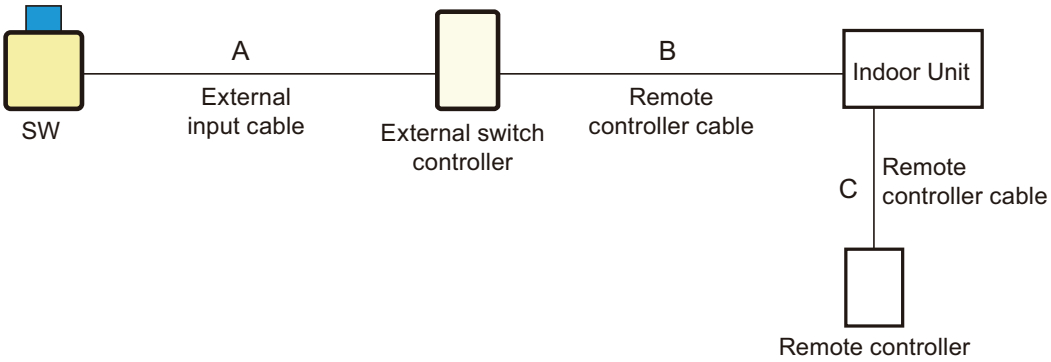

Use	A	B	B + C
2-wire type	50 m or less	—	500 m or less
3-wire type	50 m or less	25 m or less	500 m or less

CONTROL SYSTEM

■ Electrical wiring

- **For non-polar 2 wire**

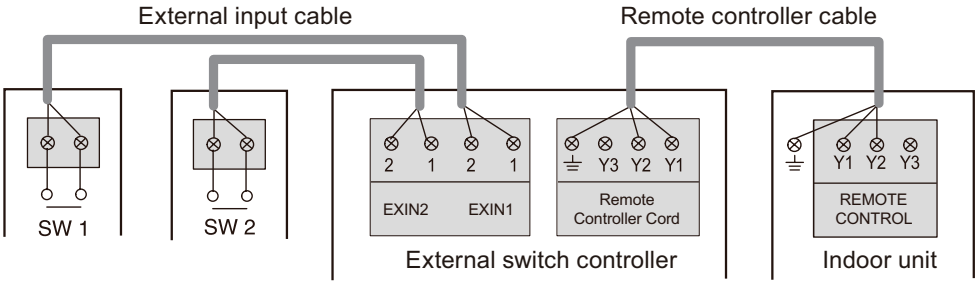

- **For polar 3 wire**

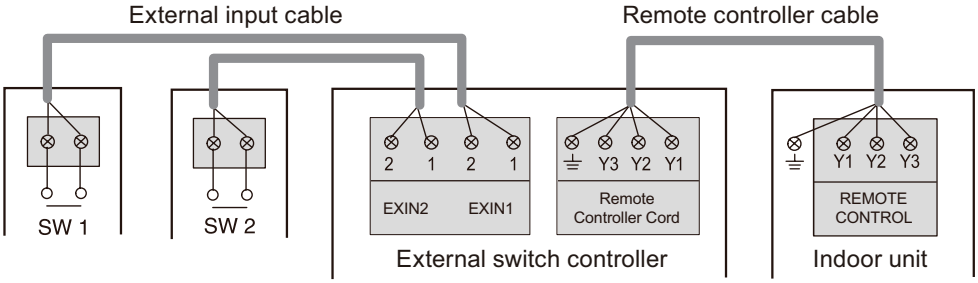

CONTROL SYSTEM

- **Connection to external contacts**

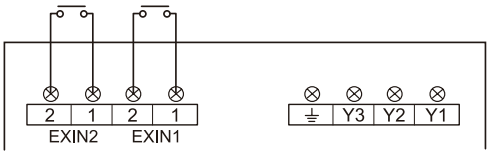

External switch controller

- Select low current use contacts (usable at DC 5 V, 2 mA or less).
- Short circuit detection resistance (R on): ≤ 500 Ω
- Open circuit detection resistance (R off): ≥ 100 kΩ
- A twister pair cable 0.33 to 1.25 mm^2 (22 to 16 AWG) should be used.
- Maximum cable length: 50 m

⚠ CAUTION

When using setback function and remote controller prohibition setting is used, leave more than 5 seconds between sensor switchings such as opening and closing the window. Otherwise, the operation signal cannot be received properly, and the control from your remote controller will not work. In such case, canceling of the setting by using Service tool is required.

Prohibited connection example

– Example 1
Series connection of window contacts and card holder is prohibited.

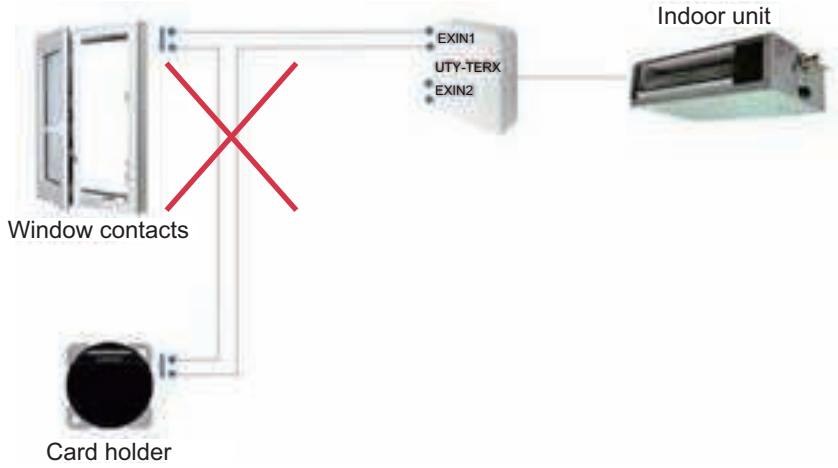

– Example 2
Parallel connection of CH1 and CH2 is prohibited.

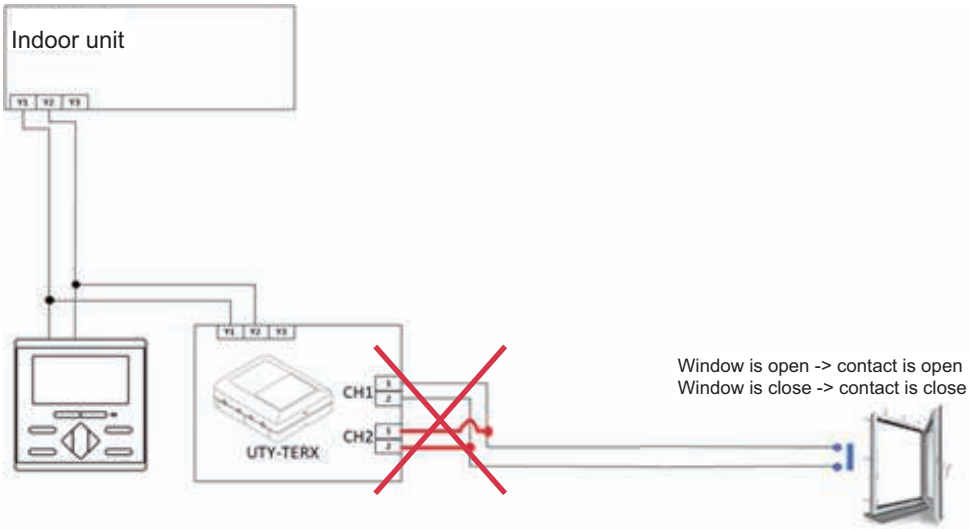

CONTROL SYSTEM

■ Dimensions

Unit: mm

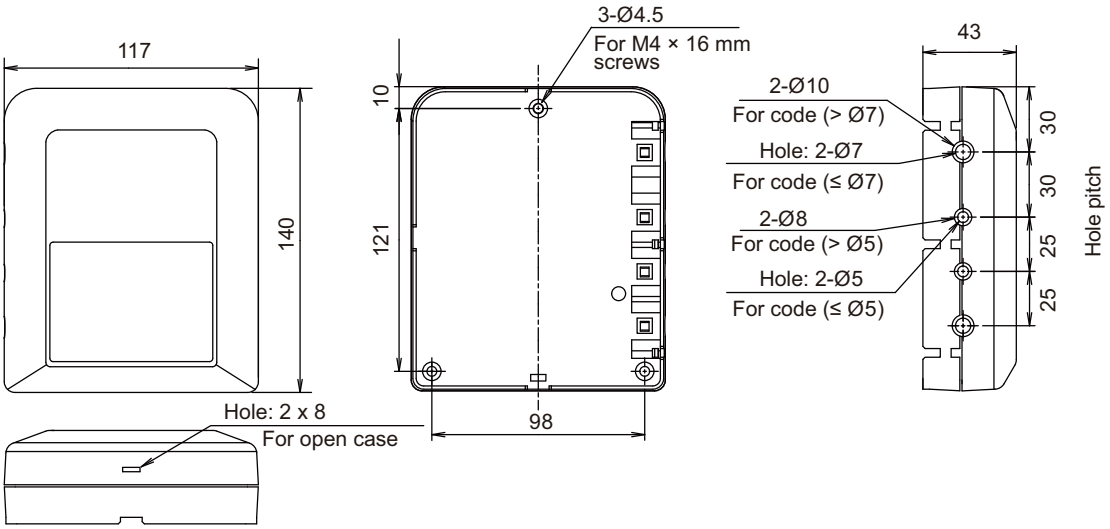

CONTROL SYSTEM

CONTROL SYSTEM

■ Installation

- **When connecting to the connector**
  - **For non-polar 2 wire**

1. Use a tool to cut off the terminal on the end of the remote controller cable, and then remove the insulation from the cut end of the cable as shown below.

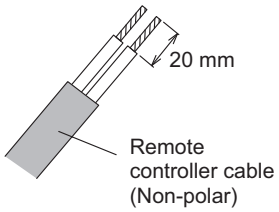

2. Connect the remote controller cable and connecting cable as shown below. Be sure to insulate the connection between the cables.

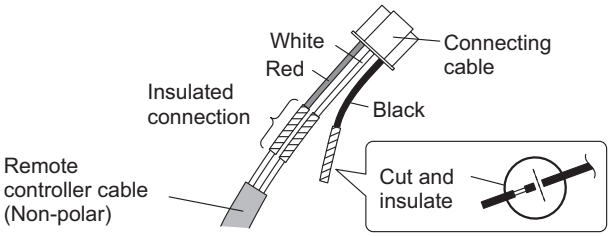

3. Connect the remote controller cable to the connecting cable, and insert it to the connector. Set the DIP switch (SW1) to “2WIRE” on the PCB of the indoor unit.

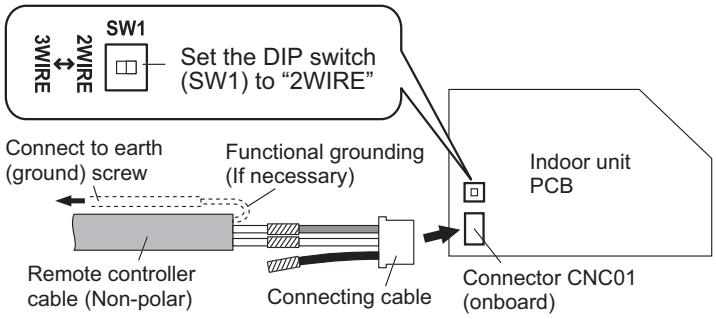

NOTE: Layout of terminal block and PCB is varies depending on the type of indoor unit.

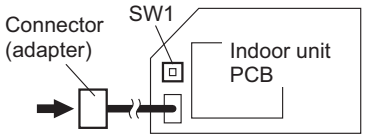

CONTROL SYSTEM

– **For polar 3 wire**

1. Use a tool to cut off the terminal on the end of the remote controller cable, and then remove the insulation from the cut end of the cable as shown below.

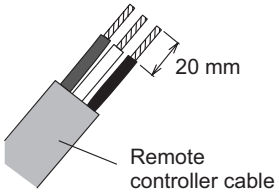

2. Connect the remote controller cable and connecting cable as shown below. Be sure to insulate the connection between the cables.

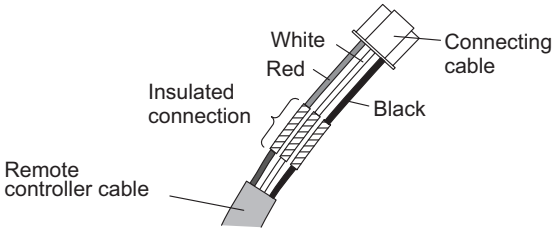

3. Connect the remote controller cable to the connecting cable, and insert it to the connector. Set the DIP switch (SW1) to “3WIRE” on the PCB of the indoor unit.

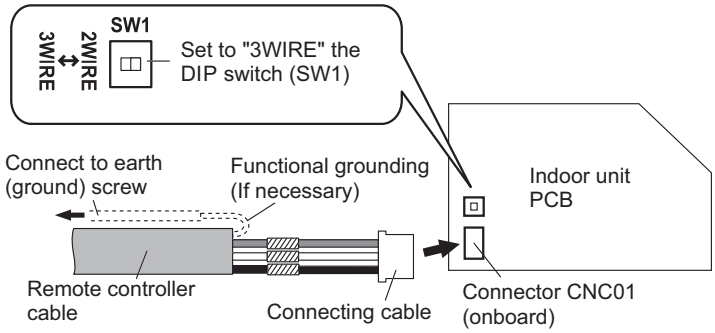

NOTE: Layout of terminal block and PCB is varies depending on the type of indoor unit.

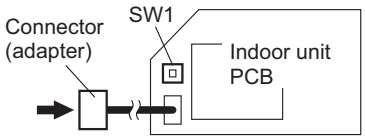

CONTROL SYSTEM

- **When connecting to the exclusive terminal block**
  - **For non-polar 2 wire**
    1. Connect the end of remote controller cable directly to the exclusive terminal block.
    2. Set the DIP switch (SW1) to “2WIRE” on the PCB of the indoor unit.

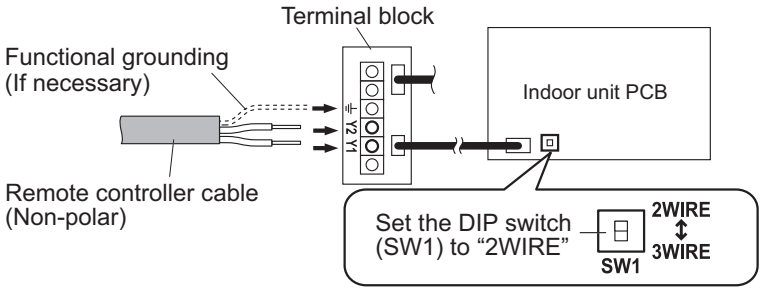

NOTES:
- Layout of terminal block and PCB is varies depending on the type of indoor unit.
- Operation may fail if it is connected to the outdoor unit or the terminal block for power supply.

  - **For polar 3 wire**
    1. Connect the end of remote controller cable directly to the exclusive terminal block.
    2. Set the DIP switch (SW1) to “3WIRE” on the PCB of the indoor unit.

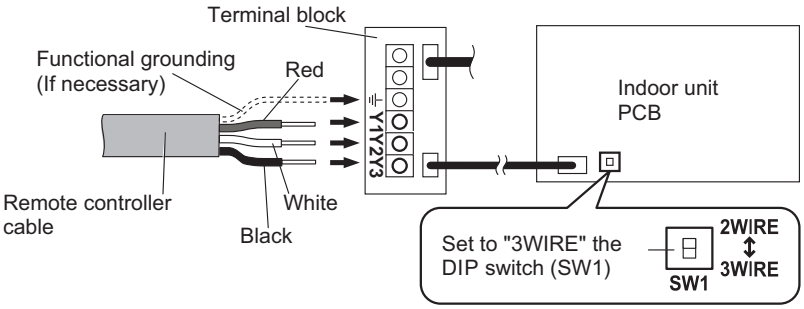

NOTES:
- Layout of terminal block and PCB is varies depending on the type of indoor unit.
- Operation may fail if it is connected to the outdoor unit or the terminal block for power supply.

CONTROL SYSTEM

■ Specifications

Input power		W	0.6
Temperature	Operating	°C	0 to 46
	Packaged	°C	-10 to 60
Humidity	Packaged	%	0 to 95 (RH) No condensation
Dimensions (H × W × D)		mm	43 × 117 × 140
Weight		g	250

● Wiring specifications

Use	Cable size	Wire type	Remarks
Remote controller cable (2-wire type)	0.33 to 1.25 mm^2 (22 to 16 AWG)	Sheathed PVC cable*	Non-polar 2 core, twisted pair Maximum cable length: 500 m
Remote controller cable (3-wire type)	0.33 mm^2 (22 AWG)		Polar 3 core, twisted pair Maximum cable length: 25 m
External input cable	0.33 to 1.25 mm^2 (22 to 16 AWG)		2 core, twisted pair Maximum cable length: 50 m

*: Use sheathed cable in accordance with local rules for remote controller cable.

CONTROL SYSTEM

■ Example

- **Controlling the individual operation status with two external contact switch**

Setting	Wiring	Operation example
Mode 0 P1: Arbitrary operation state Contact Off → On P2: Arbitrary operation state Contact Off → On Other settings are arbitrary.	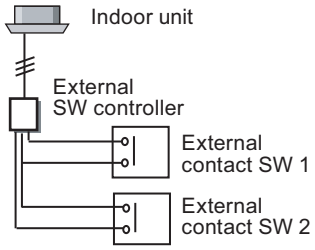	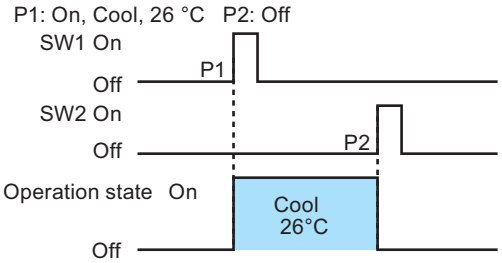

- **Controlling operation by On or Off of an external contact switch**

Setting	Wiring	Operation example
Mode 1 P1: Arbitrary operation state P2: Arbitrary operation state Other settings are arbitrary.	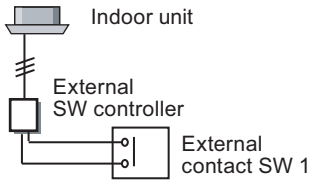	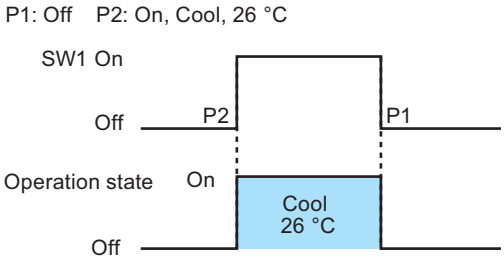
Mode 1 P1: Arbitrary operation state P2: Arbitrary operation state Other settings are arbitrary.		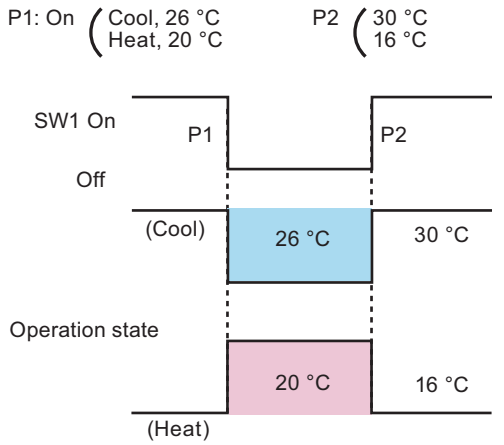
Mode 1 P1: Arbitrary operation state P2: Off timer (1, 3, 6, 12, 24 hr) Other settings are arbitrary.		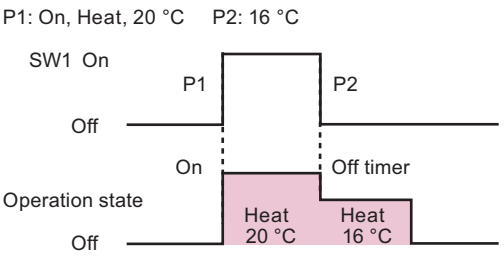

CONTROL SYSTEM

CONTROL SYSTEM

- **Operates when the external contact switch is turned on, and returns to the original operation state when the switch is turned off.**

Setting	Wiring	Operation example
Mode 1 or 0 P1: Setback P2: Arbitrary operation state Other settings are arbitrary.	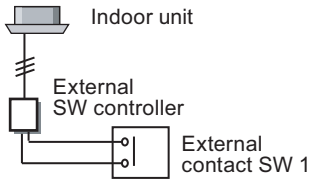	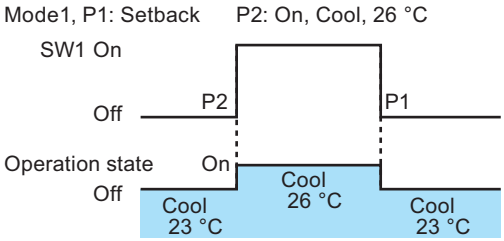

- **Operates when the external contact switch is turned off, and returns to the original operation state when the switch is turned on.**

Setting	Wiring	Operation example
Mode 1 or 0 P1: Arbitrary operation state P2: Setback Other settings are arbitrary.	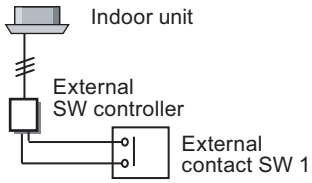	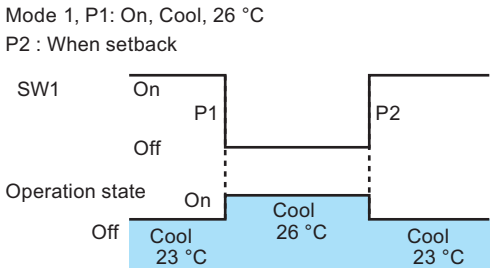

- **Thermal sensor switch is connected and cooling and heating operations are switched.**

Setting	Wiring	Operation example
Mode 1 Off output: Enabled P1: On, Cool or Heat P2: On, Cool or Heat Operation conditions: Unit operating only Other settings are arbitrary.	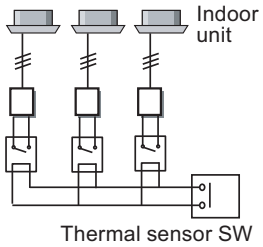 External switch controller is connected to all indoor units in the same refrigerant system and cooling and heating operations are switched by one thermal sensor.	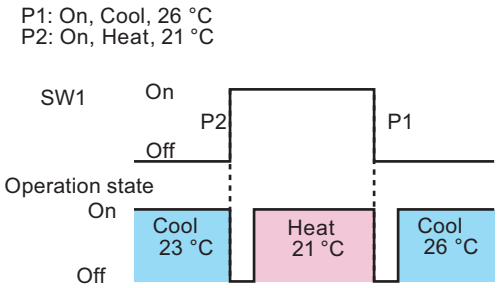

- **Preventing chatter noise within 1 minute after external contact switch is turned on**

Setting	Wiring	Operation example
Mode 1 Delay-time setting: Delay P1: Arbitrary operation state P2: Arbitrary operation state Other settings are arbitrary.	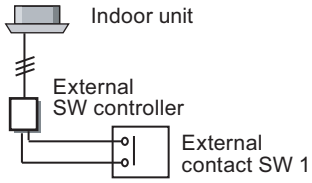	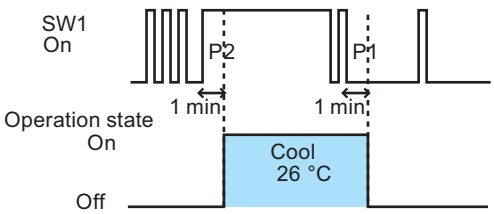

CONTROL SYSTEM

CONTROL SYSTEM

3-14. External switch controller (UTY-TEKX)

- Air conditioner switching can be controlled by connecting other sensor switches.
- On/Off, temperature, fan speed, operating mode can be switched in combination with card-key switches equipped in facilities such as hotel rooms.
- Card-key or other sensor switches are available as a locally purchased parts.

■ Accessory

Name and shape	Q'ty	Application
Cable tie	5	For External switch controller and cable binding
Screw (M4 × 16 mm)	2	For installing the External switch controller
Installation manual	1	

■ System diagram

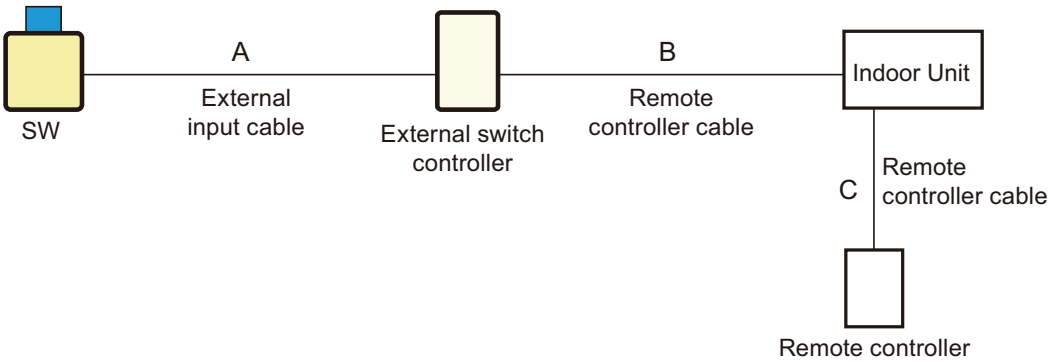

A	B	B + C
50 m or less	25 m or less	500 m or less

CONTROL SYSTEM

■ Electrical wiring

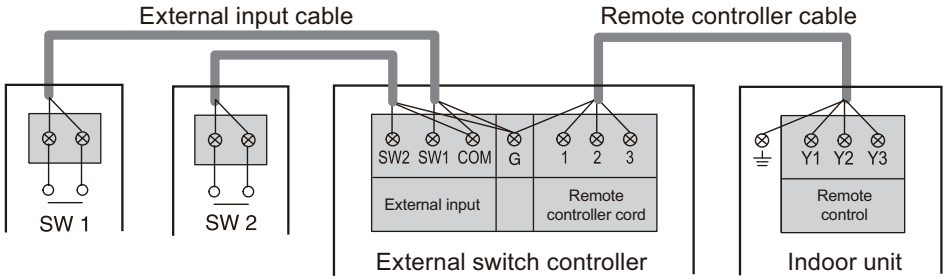

*Connect SW2 only when it is used.

Connection to external contacts

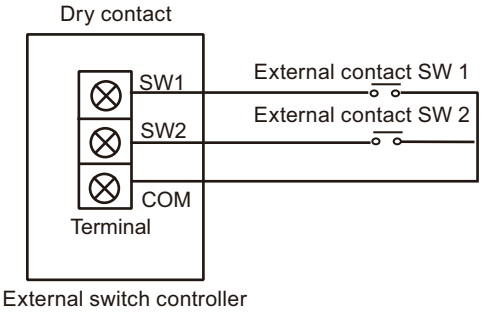

- Open circuit voltage: 12 V ± 2 V
- Short circuit current: ≤ 2 mA
- Short circuit detection resistance (R on): ≤ 1 kΩ
- Open circuit detection resistance (R off): ≥ 50 kΩ

■ Dimensions

Unit: mm

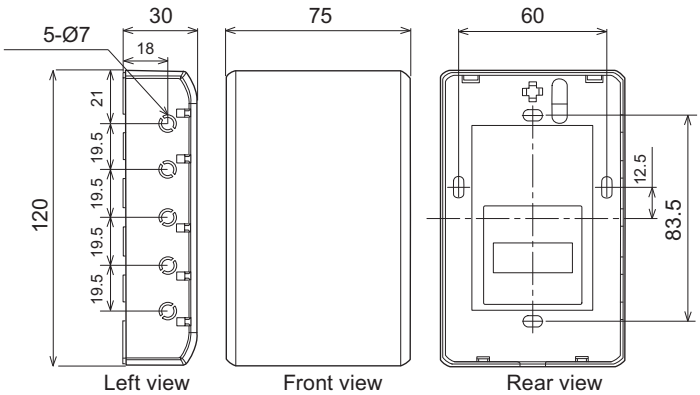

CONTROL SYSTEM

■ Installation

- **Connection pattern**

NOTE: Connection pattern is different according to type of Indoor unit.

Indoor unit type	Connection pattern
All cassette type	Pattern A
All duct type	Pattern A
All floor type	Pattern A
Floor/Ceiling type	Pattern A
All ceiling type	Pattern A
All wall mounted type	Pattern B

- **Pattern A**
  1. Connect the end of remote controller cable directly to the exclusive terminal block.
  2. Set the DIP switch (SW1) to “3WIRE” on the PCB of the indoor unit.

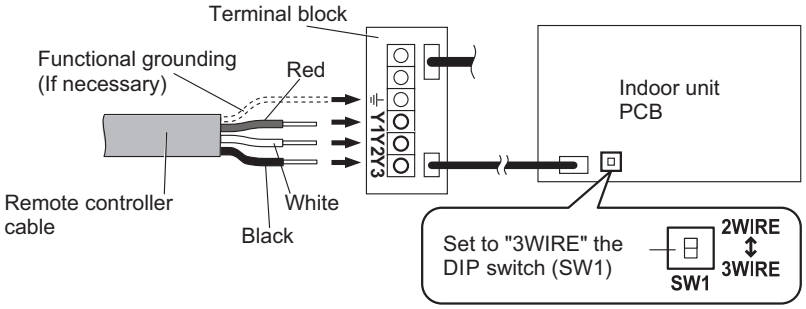

NOTES:
- Layout of terminal block and PCB is varies depending on the type of indoor unit.
- Operation may fail if it is connected to the outdoor unit or the terminal block for power supply.

CONTROL SYSTEM

- **Pattern B**
  1. Use a tool to cut off the terminal on the end of the remote controller cable, and then remove the insulation from the cut end of the cable as shown below.

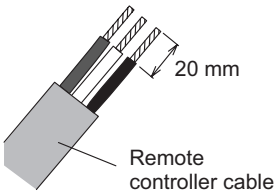

  2. Connect the remote controller cable and connecting cable as shown below. Be sure to insulate the connection between the cables.

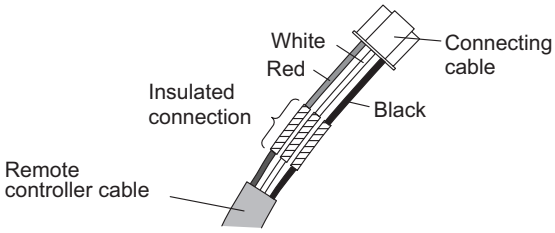

  3. Connect the remote controller cable to the connecting cable, and insert it to the connector. Set the DIP switch (SW1) to “3WIRE” on the PCB of the indoor unit.

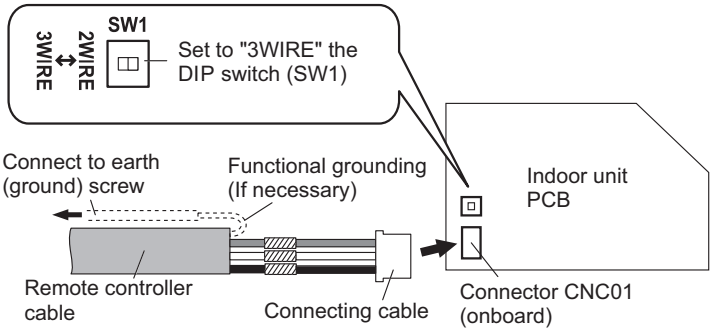

NOTE: Layout of terminal block and PCB is varies depending on the type of indoor unit.

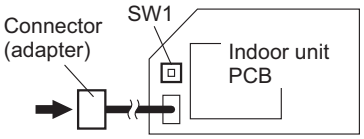

CONTROL SYSTEM

■ Specifications

Power supply	V	DC 12
Dimensions (H × W × D)	mm	120 × 75 × 30
Weight	g	100

● Wiring specifications

Use	Cable size	Wire type	Remarks
Remote controller cable	0.33 mm^2 (22 AWG)	Polar 3 core	Use sheathed PVC cable or shielded cable in accordance with the regional cable standard
External input cable		Polar 2 core, twisted pair	Use shielded cable in accordance with the regional cable standard

■ Example

- **Controlling the individual operation status with two external contact switch**

Setting	Wiring	Operation example
Mode 0 P1: Arbitrary operation state Contact Off → On P2: Arbitrary operation state Contact Off → On Other settings are arbitrary.	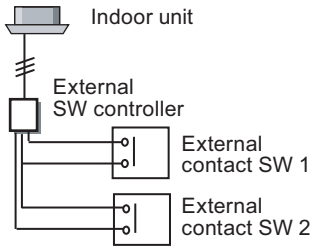	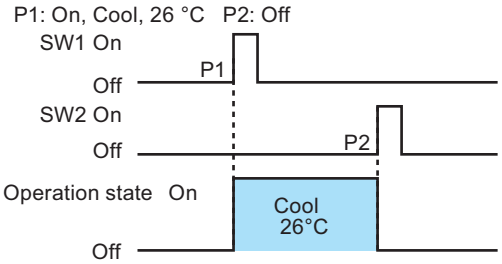

- **Controlling operation by On or Off of an external contact switch**

Setting	Wiring	Operation example
Mode 1 P1: Arbitrary operation state P2: Arbitrary operation state Other settings are arbitrary.	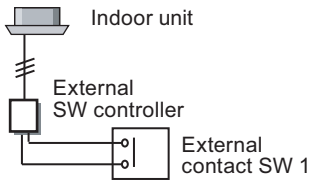	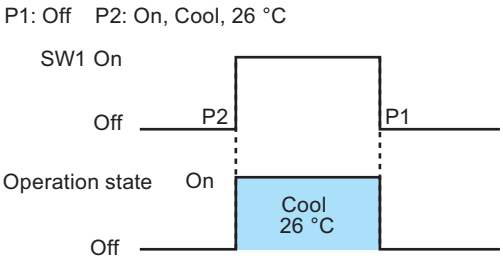

- **Operates when the external contact switch is turned on, and returns to the original operation state when the switch is turned off.**

Setting	Wiring	Operation example
Mode 1 or 0 P1: Setback P2: Arbitrary operation state Other settings are arbitrary.	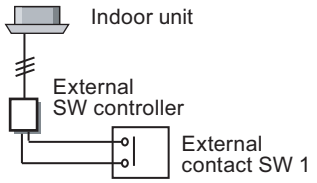	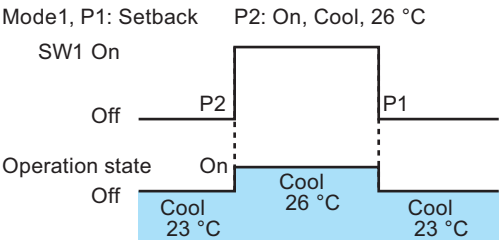

CONTROL SYSTEM

CONTROL SYSTEM

- **Operates when the external contact switch is turned off, and returns to the original operation state when the switch is turned on.**

Setting	Wiring	Operation example
Mode 1 or 0 P1: Arbitrary operation state P2: Setback Other settings are arbitrary.	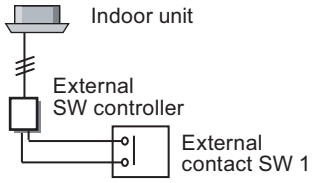	Mode 1, P1: On, Cool, 26 °C P2 : When setback 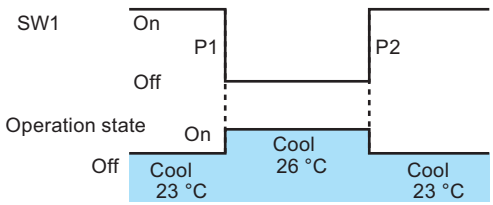

- **Thermal sensor switch is connected and cooling and heating operations are switched.**

Setting	Wiring	Operation example
Mode 1 Off output: Enabled P1: On, Cool or Heat P2: On, Cool or Heat Operation conditions: Unit operating only Other settings are arbitrary.	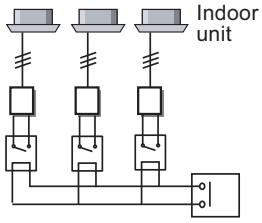 External switch controller is connected to all indoor units in the same refrigerant system and cooling and heating operations are switched by one thermal sensor.	P1: On, Cool, 26 °C P2: On, Heat, 21 °C 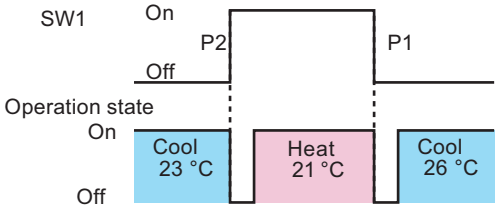

- **Preventing chatter noise within 1 minute after external contact switch is turned on**

Setting	Wiring	Operation example
Mode 1 Delay-time setting: Delay P1: Arbitrary operation state P2: Arbitrary operation state Other settings are arbitrary.	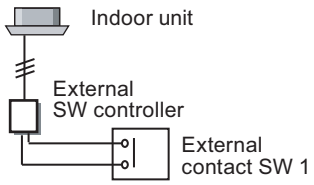	P1: Off P2: On, Cool, 26 °C 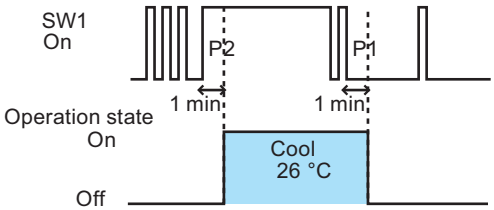

CONTROL SYSTEM

CONTROL SYSTEM

4. Service and web monitoring tool

4-1. Service tool (UTY-ASGXZ1)

Extensive monitoring and analysis functions for installation and maintenance.
Operation status and error history can be grasped promptly and adequately.

■ Accessory

Name and shape	Q'ty	Application
 WHITE-USB-KEY (software protection key with software)	1	Includes the software and manuals for Service tool. Additionally, it works as the software protection key. Software protection key to be connected to an USB port on the PC that Service tool is installed. Service tool runs only on a PC with this WHITE-USB-KEY.

■ Other required devices (Locally purchased)

- Personal computer that satisfies the following system requirements
  - For VRF system side PC

Personal computer system requirement	
Operating system	• Microsoft Windows 7 Professional (32-bit or 64-bit) SP1 • Microsoft Windows 8.1 Pro (32-bit or 64-bit) • Microsoft Windows 10 Pro (32-bit or 64-bit)
CPU	1 GHz or higher
Memory	• 1 GB or more (for Windows 7 [32-bit], Windows 8.1 [32-bit], and Windows 10 [32-bit]) • 2 GB or more (for Windows 7 [64-bit], Windows 8.1 [64-bit], and Windows 10 [64-bit])
HDD	40 GB or more of free space
Display	1,366 × 768 or higher resolution
Interface	• 2 USB ports – 1 USB port is required for WHITE-USB-KEY connection – 1 USB port is required for Echelon U10 USB Network Interface
Software	Adobe Reader 9.0 or later
Internet transmission rate (in remote access)	Internet environment capable for communication speed of 3 Mbps or more (for uploading) all the time (including when accessing to oversea website)

  - For remote side PC

Personal computer system requirement	
Web browser	Internet Explorer 11.0 or Microsoft Edge
Display	1,366 × 768 or higher resolution (Before use, set the resolution so that the resolution of remote side PC monitor screen is higher than that of VRF system side PC.)
Internet transmission rate (in remote access)	Internet environment capable for communication speed of 4 Mbps or more (for downloading) all the time (including when accessing to oversea website)

- Echelon U10 USB Network Interface – TP/FT-10 Channel (Model number: 75010R) (Required for each VRF network)

CONTROL SYSTEM

System diagram

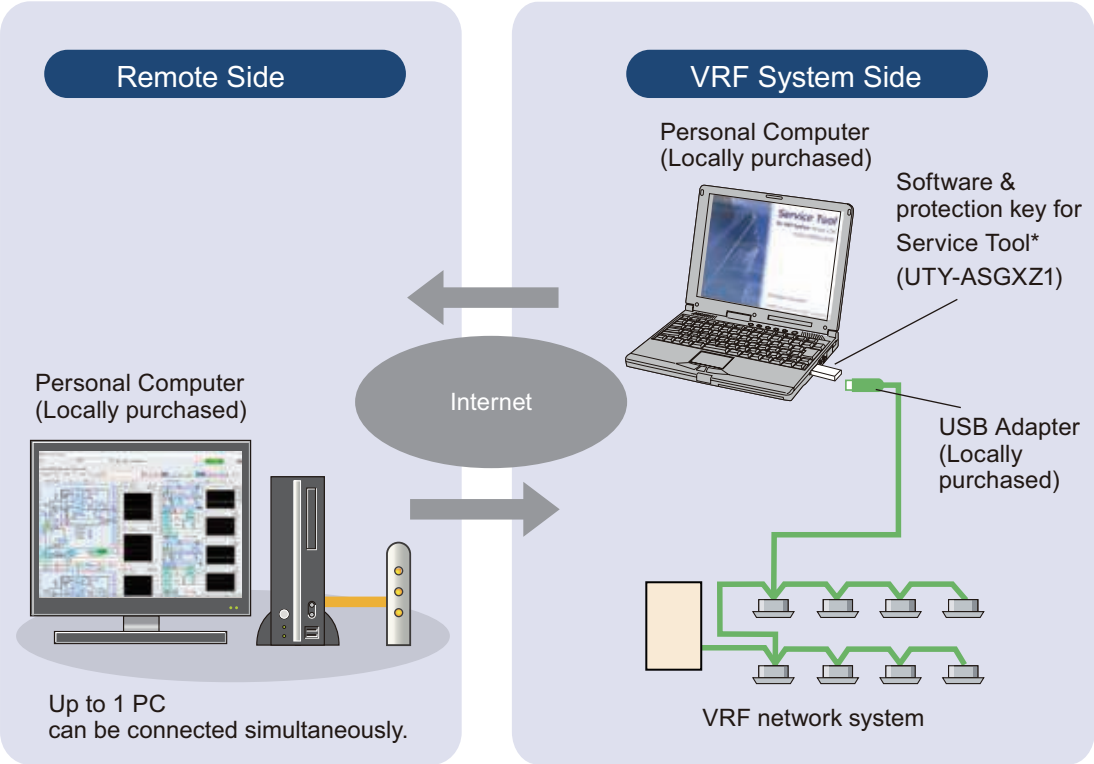

*: WibuKey of UTY-ASGX can be used.

Functions

Function	Summary
System list	Displays the overall operation status of all or specified units in the system in a list form. 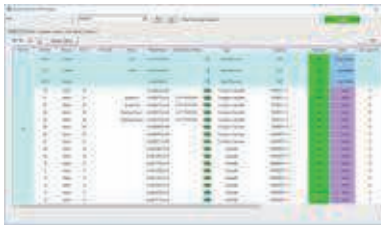
Equipment detail (Diagram)	Displays the detail information for sensor values, electrical components etc. for the specified units in schematic. The information here can be used along with the detailed information in list form, to check the operation status of units and make detail analysis on the cause, in case an error occurs.
Equipment detail (Status list)	Displays the detail information for sensor values, electrical components etc. of units in a specified refrigerant system in list form. The information here can be used along with the detailed information in diagram form, to check the operation status of units and make detail analysis on the cause, in case an error occurs.
Equipment detail (Check list)	Judges the sensor valves of outdoor units and indoor units are appropriate, and displays the result. By saving the result as a CSV file, it can be outputted with a report format.

CONTROL SYSTEM

Function	Summary
Operation history	The indoor units or outdoor units operation history can be recorded. The displayed operation history can be printed out and saved to a CSV file. 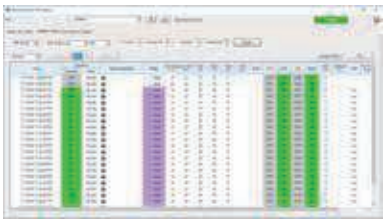
Error history	Displays the error information for each unit. The error information can sequentially be displayed up to 50 items as they occur starting with the latest error. 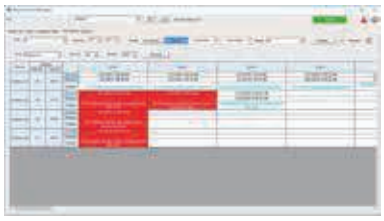
Graph	Displays the sensor valves of outdoor units and indoor units in more detail and more easier to see. Sensor information that the user want to check can be selected freely, and combined information can be displayed. Up to 6 graph screens can be displayed simultaneously. 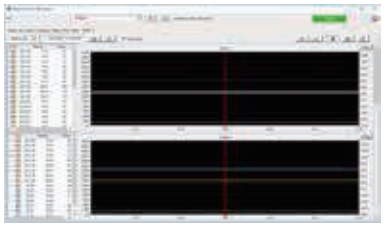
Data backup	Operation and error history data can be downloaded. Only the required data may be downloaded specifying the refrigerant system, unit, and time range.
Operation setting	Changeable the operation status of the indoor unit individually or by group. 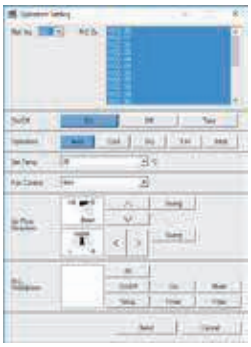
Network topology analyzer	A list of units connected to the VRF system network is displayed in network segments in tree form.
Remote setting	Function (Field) setting for indoor units is realized remotely.
System time setting	An arbitrary time is set for all the remote controllers within the system.
Central control forced release	The operation setting restriction function of the indoor units set form the controller can be forcibly released. (remote controller inhibit, temperature upper/lower limit setting)
Model name writer	An arbitrary model name can be written to the target unit.
Error memory reader	When an error occurs at an outdoor unit, the operation data records before the error are acquired over a network, and saved to a CSV file. **NOTE:** To perform “Error memory reading”, Service tool and the corresponding outdoor unit must be connected directly with each other. Refer to the operation manual of the Service tool for details.
Time guard information	Reference data for judging the maintenance period of indoor and outdoor units (compressor, fan, etc. integrated time) is output to a CSV file.
Off line data reader	Displays and compares the current data and the backup data saved in the past on dual screen. 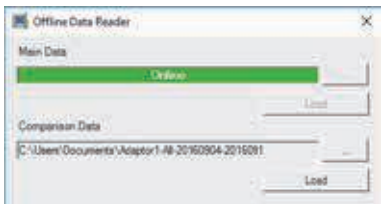

CONTROL SYSTEM

CONTROL SYSTEM

Function	Summary
Version	Confirm the current version of the software, and it is not the latest, it can be updated to the latest version.
Remote operation	Through the Internet, Service tool in the PC on VRF system side can be operable in real-time from remote side PC. Chat-enabled, and the acquired data by the Service tool can be downloaded by remote side PC.

CONTROL SYSTEM

4-2. Web monitoring tool (UTY-AMGXZ1)

■ Accessory

Name and shape	Q'ty	Application
 WHITE-USB-KEY (software protection key with software)	1	Includes the software and manuals for Web monitoring tool. Additionally, it works as the software protection key. Software protection key to be connected to an USB port on the PC that Web monitoring tool is installed. Web monitoring tool runs only on a PC with this WHITE-USB-KEY.

■ Other required devices (Locally purchased)

- Personal computer that satisfies the following system requirements
  - For VRF system side PC

Personal computer system requirement	
Operating system	• Microsoft Windows 7 Professional (32-bit or 64-bit) SP1 • Microsoft Windows 8.1 Pro (32-bit or 64-bit) • Microsoft Windows 10 Pro (32-bit or 64-bit)
CPU	1 GHz or higher
Memory	• 1 GB or more (for Windows 7 [32-bit], Windows 8.1 [32-bit], and Windows 10 [32-bit]) • 2 GB or more (for Windows 7 [64-bit], Windows 8.1 [64-bit], and Windows 10 [64-bit])
HDD	40 GB or more of free space
Display	1,366 × 768 or higher resolution
Interface	• USB port (for Echelon U10 USB Network Interface, Max. 4, software protection key) • Either of the following interface is required for remote connection: – Internet using LAN: Ethernet port is required.
Software	Adobe Reader 9.0 or later
Internet transmission rate (in remote access)	Internet environment capable for communication speed of 3 Mbps or more (for uploading) all the time (including when accessing to oversea website)

  - For remote side PC

Personal computer system requirement	
Web browser	Internet Explorer 11.0 or Microsoft Edge
Display	1,366 × 768 or higher resolution (Before use, set the resolution so that the resolution of remote side PC monitor screen is higher than that of VRF system side PC.)
Internet transmission rate (in remote access)	Internet environment capable for communication speed of 4 Mbps or more (for downloading) all the time (including when accessing to oversea website)

- Echelon U10 USB Network Interface – TP/FT-10 Channel (Model number: 75010R) (Required for each VRF network)

CONTROL SYSTEM

■ System diagram

- **System components**

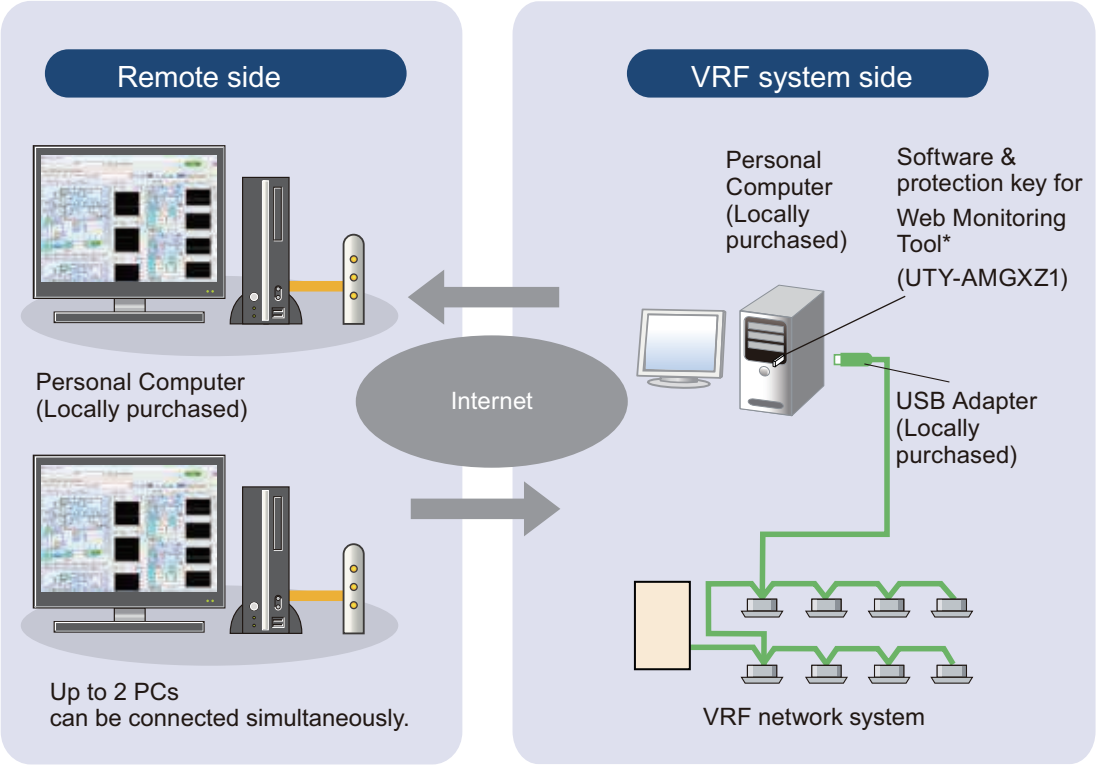

*WibuKey of UTY-AMGX can be used.

- **Support 4 VRF network systems**
  PC USB adapters (Max. 4 ports per PC) permit control and monitoring of up to 1,600 units.
  Suitable for large-scale buildings or hotels.

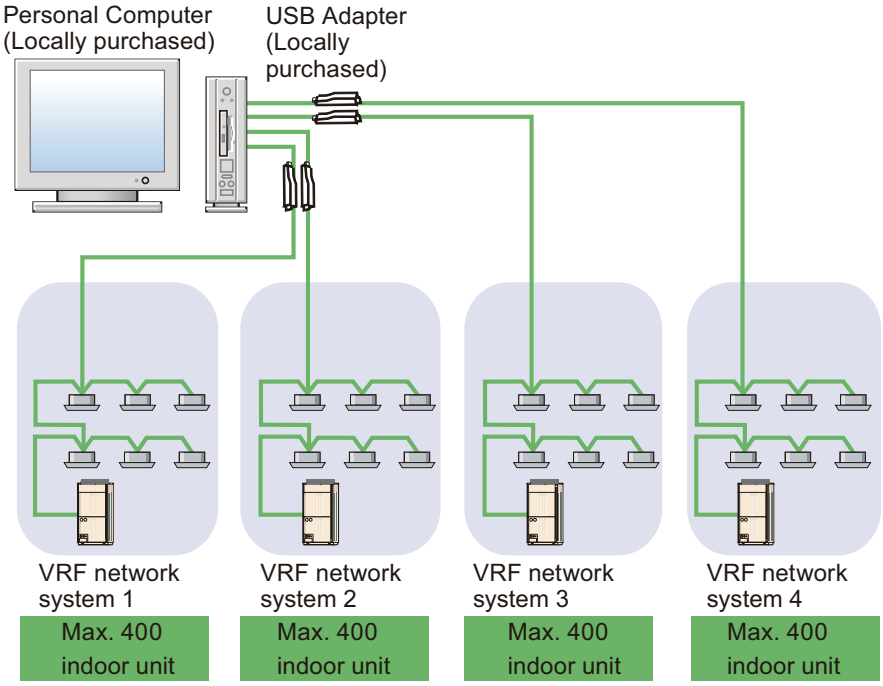

CONTROL SYSTEM

■ Comparison table

Function	Service tool (UTY-ASGXZ1)		Web monitoring tool (UTY-AMGXZ1)	
	VRF system side	Remote side	VRF system side	Remote side
System list	●	●	●	●
Equipment detail (Diagram)	●	●	●	●
Equipment detail (Status list)	●	●	●	●
Equipment detail (Check list)	●	●	●	●
Operation history	●	●	●	●
Error history	●	●	●	●
Graph	●	●	●	●
Data backup	●	●	●	●
Operation setting	●	●	●	●
E-mail automatic transmission of system malfunction	—	—	●*	—
Network topology analyzer	●	●	●	●
Remote setting	●	●	●	●
System time setting	●	●	●	●
Central control forced release	●	●	●	●
Model name writer	●	●	—	—
Error memory reader	●	●	—	—
Time guard information	●	●	●	●
Off line data reader	●	●	—	—
Version	●	●	●	●
Software update	●	—	●	—

*: Available only during connection to the Internet

CONTROL SYSTEM

Refrigerant R410A INVERTER

AIRSTAGE™
Variable Refrigerant Flow System

6. SYSTEM DESIGN

CONTENTS

6. SYSTEM DESIGN

1. System design 06-1

1-1. Refrigerant system 06-1

1-2. VRF network system 06-7

1-3. Installation place 06-14

2. Piping design 06-17

2-1. Important items when using refrigerant (R410A) 06-17

2-2. Piping limitation 06-20

2-3. Pipe size 06-22

2-4. Selection of pipe heat insulating material 06-27

2-5. Additional charge calculation 06-28

2-6. Piping design example 06-30

3. Piping connection 06-36

3-1. Piping to outdoor unit 06-38

3-2. EV kit 06-41

3-3. Separation tube 06-45

3-4. Header 06-49

4. Wiring design 06-52

4-1. Electrical wiring 06-52

4-2. Power supply cable 06-54

4-3. Transmission cable 06-58

4-4. Controller cable 06-66

5. Drain connection 06-69

5-1. Outdoor unit 06-69

5-2. Indoor unit 06-70

1. System design

1-1. Refrigerant system

■ Connectable unit within 1 refrigerant system

- **Outdoor unit**

Unit	Quantity
Outdoor unit	1 unit

- **Indoor unit**

Outdoor unit			Connectable indoor unit conditions	
HP	Cooling capacity (kW)	Model name	Connectable indoor unit*1	Cooling capacity range*2
4	12.1	AJ∗040LCLDH	1 to 11	50% to 130%
5	14.0	AJ∗045LCLDH	1 to 12	
6	15.1	AJ∗054LCLDH	1 to 13	

*1: When Circular flow cassette type (AUXN009-014GLAH) is connected, connectable indoor unit number will be limited 4.
*2: When Circular flow cassette type (AUXN009-014GLAH) is connected, connectable cooling capacity range is 50% to 105%.

⚠ CAUTION

- When all indoor units are operating at maximum capacity, individual indoor unit operates at a slightly lower capacity. (When connecting more than 100%)
- Do not exceed both of connectable cooling capacity range and maximum connectable indoor unit quantity, otherwise it may cause hinder the return of the refrigerant oil and cause a compressor breakdown.

SYSTEM DESIGN

■ Refrigerant system examples

NOTE: For cooling capacity range of connectable indoor units, refer to "Refrigerant system" on page 06-1.

● Example 1 (OK)

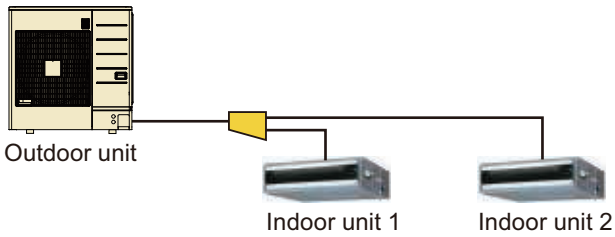

Capacity ratio	64%

Model name		Cooling capacity	Total capacity	Connectable indoor unit capacity		Judge
				Min.	Max.	
		(kW)				
Outdoor unit	AJ∗045LCLDH	14.0	14.0	(2) 50% 7.0	(3) 130% 18.2	(2) ≤ (1) ≤ (3) 7.0 < 9.0 < 18.2 → OK
Indoor unit 1	ARXD014GLEH	4.5	(1) 9.0			
Indoor unit 2	ARXD014GLEH	4.5				

● Example 2 (OK)

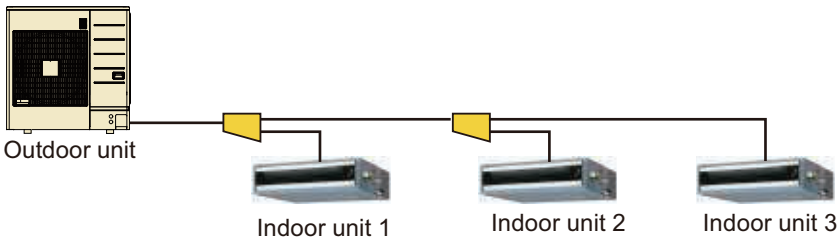

Capacity ratio	120%

Model name		Cooling capacity	Total capacity	Connectable indoor unit capacity		Judge
				Min.	Max.	
		(kW)				
Outdoor unit	AJ∗045LCLDH	14.0	14.0	(2) 50% 7.0	(3) 130% 18.2	(2) ≤ (1) ≤ (3) 7.0 < 16.8 < 18.2 → OK
Indoor unit 1	ARXD018GLEH	5.6	(1) 16.8			
Indoor unit 2	ARXD018GLEH	5.6				
Indoor unit 3	ARXD018GLEH	5.6				

SYSTEM DESIGN

● Example 3 (Prohibited)

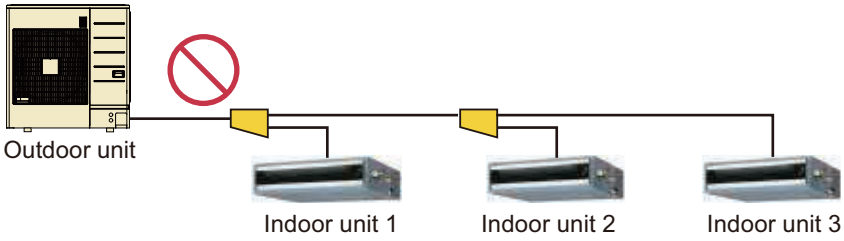

Capacity ratio	131%

Model name		Cooling capacity	Total capacity	Connectable indoor unit capacity		Judge
				Min.	Max.	
		(kW)				
Outdoor unit	AJ∗045LCLDH	14.0	14.0	(2) 50% 7.0	(3) 130% 18.2	(3) < (1) 18.2 < 18.3 → Prohibited
Indoor unit 1	ARXD024GLEH	7.1	(1) 18.3			
Indoor unit 2	ARXD018GLEH	5.6				
Indoor unit 3	ARXD018GLEH	5.6				

● Example 4 (OK)

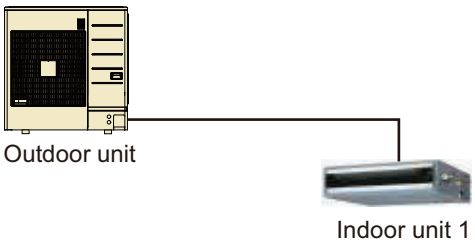

Capacity ratio	51%

Model name		Cooling capacity	Total capacity	Connectable indoor unit capacity		Judge
				Min.	Max.	
		(kW)				
Outdoor unit	AJ∗045LCLDH	14.0	14.0	(2) 50% 7.0	(3) 130% 18.2	(2) ≤ (1) ≤ (3) 7.0 < 7.1 < 18.2 → OK
Indoor unit 1	ARXD024GLEH	7.1	(1) 7.1			

SYSTEM DESIGN

● Example 5 (Prohibited)

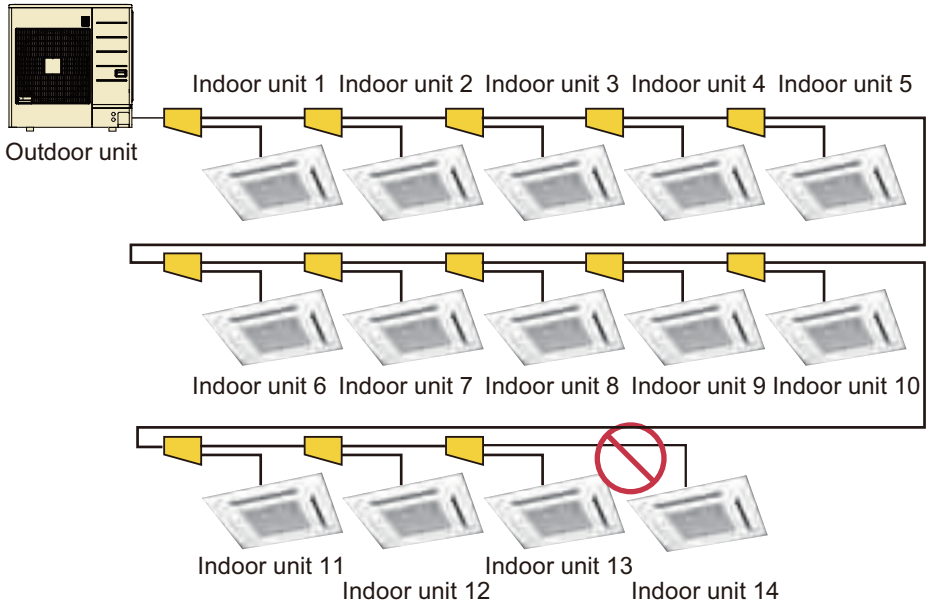

Capacity ratio	117%

Model name		Cooling capacity	Total capacity	Connectable indoor unit capacity		Judge
				Min.	Max.	
		(kW)				
Outdoor unit	AJ∗045LCLDH	15.1	15.1	(2) 50% 7.6	(3) 130% 19.6	Prohibited → Because 14 indoor units are connected
Indoor unit 1	AUXB004GLEH	1.1	(1) 17.6			
Indoor unit 2	AUXB004GLEH	1.1				
Indoor unit 3	AUXB004GLEH	1.1				
Indoor unit 4	AUXB004GLEH	1.1				
Indoor unit 5	AUXB004GLEH	1.1				
Indoor unit 6	AUXB004GLEH	1.1				
Indoor unit 7	AUXB004GLEH	1.1				
Indoor unit 8	AUXB004GLEH	1.1				
Indoor unit 9	AUXB004GLEH	1.1				
Indoor unit 10	AUXB004GLEH	1.1				
Indoor unit 11	AUXB004GLEH	1.1				
Indoor unit 12	AUXB004GLEH	1.1				
Indoor unit 13	AUXB007GLEH	2.2				
Indoor unit 14	AUXB007GLEH	2.2				

SYSTEM DESIGN

● Example 6 (OK)

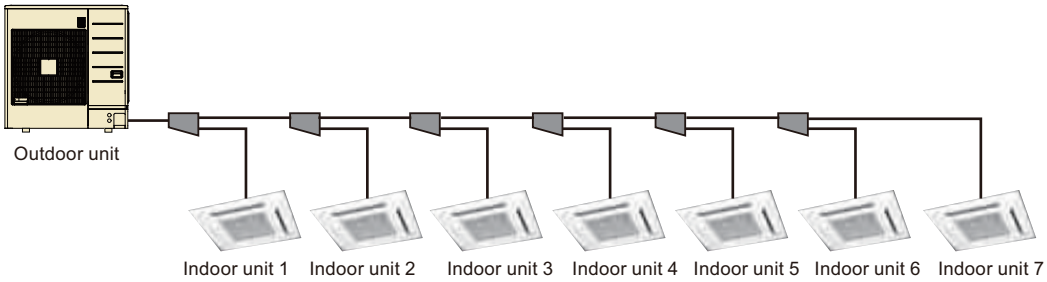

Capacity ratio	116%

Model name		Cooling capacity	Total capacity	Connectable indoor unit capacity		Judge
				Min.	Max.	
		(kW)				
Outdoor unit	AJ∗045LCLDH	14.0	14.0	(2) 50% 7.0	(3) 130% 18.2	(2) ≤ (1) ≤ (3) 7.0 < 16.2 < 18.2 → OK
Indoor unit 1	AUXB004GLEH	1.1	(1) 16.2			
Indoor unit 2	AUXB004GLEH	1.1				
Indoor unit 3	AUXB009GLEH	2.8				
Indoor unit 4	AUXB009GLEH	2.8				
Indoor unit 5	AUXB009GLEH	2.8				
Indoor unit 6	AUXB009GLEH	2.8				
Indoor unit 7	AUXB009GLEH	2.8				

● Example 7 (OK)

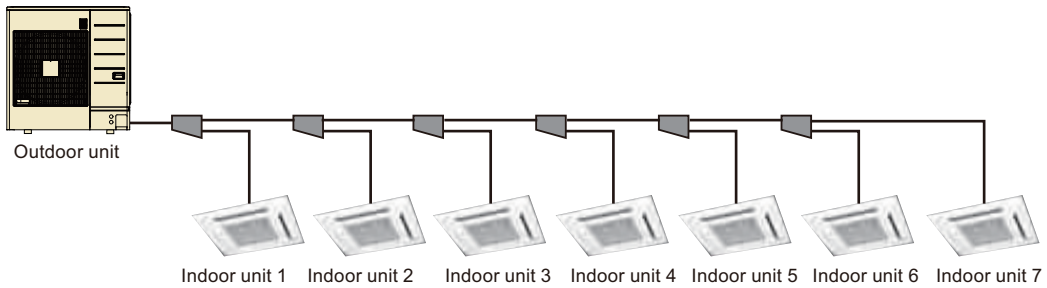

Capacity ratio	121%

Model name		Cooling capacity	Total capacity	Connectable indoor unit capacity		Judge
				Min.	Max.	
		(kW)				
Outdoor unit	AJ∗045LCLDH	14.0	14.0	(2) 50% 7.0	(3) 130% 18.2	(2) ≤ (1) ≤ (3) 7.0 < 17.0 < 18.2 → OK
Indoor unit 1	AUXB004GLEH	1.1	(1) 17.0			
Indoor unit 2	AUXB004GLEH	1.1				
Indoor unit 3	AUXB009GLEH	2.8				
Indoor unit 4	AUXB009GLEH	2.8				
Indoor unit 5	AUXB009GLEH	2.8				
Indoor unit 6	AUXB009GLEH	2.8				
Indoor unit 7	AUXB012GLEH	3.6				

SYSTEM DESIGN

● Example 8 (OK)

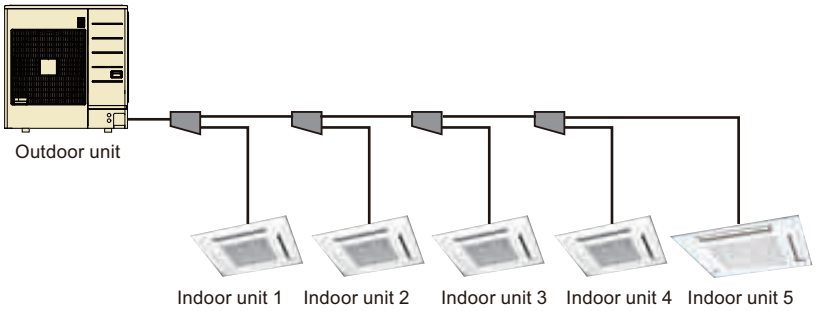

Capacity ratio	104%

Model name		Cooling capacity	Total capacity	Connectable indoor unit capacity		Judge
				Min.	Max.	
		(kW)				
Outdoor unit	AJ∗045LCLDH	14.0	14.0	(2) 50% 7.0	(3) 130% 18.2	(2) ≤ (1) ≤ (3) 7.0 < 14.5 < 18.2 → OK
Indoor unit 1	AUXB004GLEH	1.1	(1) 14.5			
Indoor unit 2	AUXB004GLEH	1.1				
Indoor unit 3	AUXB004GLEH	1.1				
Indoor unit 4	AUXB007GLEH	2.2				
Indoor unit 5	AUXA30GALH	9.0				

● Example 9 (OK)

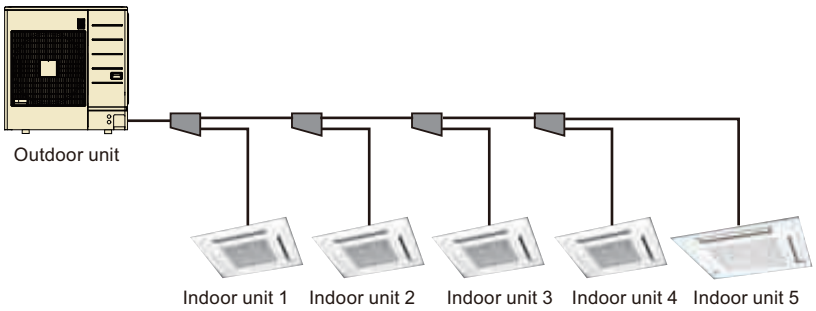

Capacity ratio	111%

Model name		Cooling capacity	Total capacity	Connectable indoor unit capacity		Judge
				Min.	Max.	
		(kW)				
Outdoor unit	AJ∗045LCLDH	14.0	14.0	(2) 50% 7.0	(3) 130% 18.2	(2) ≤ (1) ≤ (3) 7.0 < 15.6 < 18.2 → OK
Indoor unit 1	AUXB004GLEH	1.1	(1) 15.6			
Indoor unit 2	AUXB004GLEH	1.1				
Indoor unit 3	AUXB007GLEH	2.2				
Indoor unit 4	AUXB007GLEH	2.2				
Indoor unit 5	AUXA30GALH	9.0				

SYSTEM DESIGN

1-2. VRF network system

■ Definition

VRF network

VRF network means global VRF network.

Network segment (NS)

Network segment (NS) means each networks shut off by Signal amplifier.

Network segments mean divided block which has been connected with Signal amplifier within conditions that required Signal amplifier.

When a Signal amplifier is installed, network is divided into two network segments.

Unit

Unit means that forward transmission in network segment.

Terminal resistor

Terminal resistor means resistor should set in network segment.

■ Overview

- VRF network system should keep both of number of unit and wiring length. When system exceeds either number of unit or wiring length, the system should be divided.
- Different VRF series may not coexist within the same network.

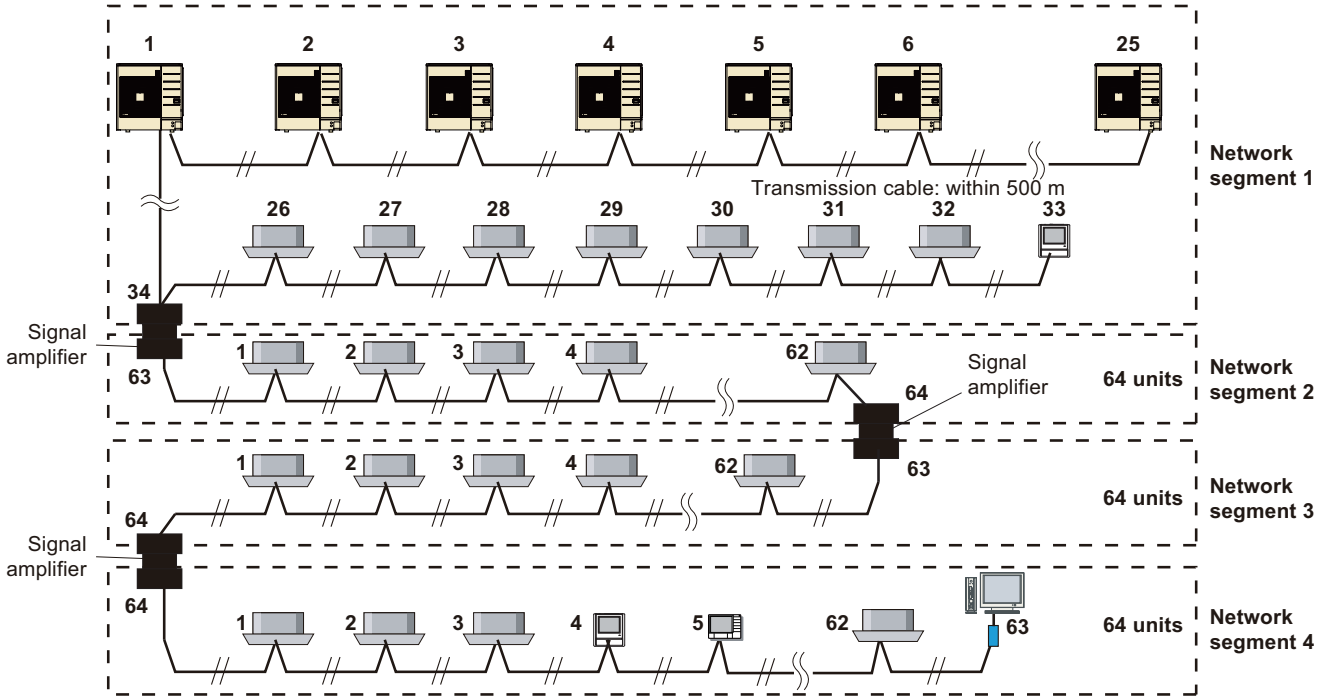

SYSTEM DESIGN

■ Maximum wiring length

Transmission cable	Maximum wiring length
Total wiring length of transmission	3,600 m
Maximum wiring length between units	400 m
Total wiring length in 1 segment	500 m

	VRF network system	Segment
Wiring length	3,600 m	500 m
Number of units	400	64

In the following case, Signal amplifier is required.

- When the total length of the transmission cable exceeds 500 m.
- When transmission cable length between each units exceeds (in segment) 400 m.
- When the number of total unit exceeds 64 units. (For how to count units, refer to "How to count units in a network segment" on page 06-13.

● Maximum wiring length of units

Name	Model name	Maximum wiring length		Remarks
Network converter	UTY-VGGXZ1	Total length of group remote controller cable to Network converter	100 m	Used for group remote controller
	UTY-VTGX UTY-VTGXV UTY-VGGXZ1	Remote controller to Network converter	100 m	Used for single split air conditioner
		Indoor unit to Network converter	100 m	
Network converter for LonWorks	UTY-VLGX	In each network segment	500 m	
KNX converter for VRF	UTY-VKGX	In each network segment	500 m	
KNX converter for indoor unit	UTY-VKSX	In each network segment	500 m	
Modbus converter	UTY-VMGX	In each network segment	500 m	
BACnet gateway (Hardware)	UTY-VBGX	BMS to BACnet gateway	100 m	
Signal amplifier	UTY-VSGXZ1	In each network segment	500 m	
External switch controller	UTY-TERX UTY-TEKX	External switch to External switch controller	50 m	Maximum connectable indoor units: 16 2 remote controllers can be used jointly.
		Indoor unit to External switch controller	25 m	
Wired remote controller	UTY-RNR∗Z∗ UTY-RLR∗ UTY-RNK∗	Remote controller cable	500 m	
Simple remote controller	UTY-RSR∗ UTY-RSK∗ UTY-RHR∗ UTY-RHK∗			

SYSTEM DESIGN

SYSTEM DESIGN

■ Maximum connectable unit numbers in 1 VRF network system

Outdoor unit	100
Indoor unit	400

● Controller

- **Central controller**

Exterior	Part name	Model name	Max. connectable number	Max. controllable number			
				VRF network system	Remote controller group	Indoor unit	Group
	System controller*1	UTY-APGXZ1	1	4	1,600 per VRF network system		
	System controller lite	UTY-ALGXZ1	1	1	400		
	Touch panel controller	UTY-DTG∗Z1	16*2	—	400		
	Central remote controller	UTY-DCG∗Z∗	16*2	—	100	100	50
	Group remote controller*3	UTY-CGG∗	64*2	—	8	16	—

NOTES:

- *1: Different VRF series may be connected for each of the 4 VRF networks supported by the product, but different series may not coexist within the same network. (VR-IV, J-IV, J-IVS, J-IVL, VR-II, V-III, J-III, J-IIS, and J-IIIL can exist together in same network. V and S can exist together in same network, too.)
- *2: For 1 VRF network system, total number of Touch panel controller, Central remote controller, Network converter for Group remote controller, KNX converter for VRF, Modbus converter for VRF, BACnet gateway (Hardware) is 16, including 1 Network converters for LonWorks.
- *3: When Group remote controller is used, Network converter (UTY-VGGXZ1) is required.

SYSTEM DESIGN

- **Individual controller**

Exterior	Part name	Model name	Max. number	Remarks
	Wired remote controller (Touch panel)	UTY-RNR∗Z∗	—	Maximum controllable indoor units: 9
	Wired remote controller	UTY-RLR∗	—	Maximum controllable indoor units: 9
	Wired remote controller	UTY-RCR∗Z1	—	Maximum controllable indoor units: 9
	Wired remote controller	UTY-RNK∗	—	Maximum controllable indoor units: 9
	Simple remote controller	UTY-RSR∗ UTY-RSK∗	—	Maximum controllable indoor units: 9
	Simple remote controller (Without operation mode)	UTY-RHR∗ UTY-RHK∗	—	Maximum controllable indoor units: 9
	Wireless remote controller	UTY-LNH∗	—	

SYSTEM DESIGN

SYSTEM DESIGN

● Adaptor/Convertor/Maintenance tool

Exterior	Part name	Model name	Max. number	Remarks
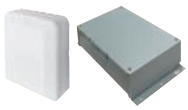	Network converter	UTY-VTGX UTY-VTGXV	100	• Total number of refrigerant system and Network converter is maximum 100. • Maximum connectable single split type or multi type: 16 units
	Network converter	UTY-VGGXZ1	For split system: 100 For Group remote controller: 16*1	• Total number of refrigerant system and Network converter is maximum 100. • Maximum connectable single split type or multi type: 16 units • Maximum connectable Group remote controller: 4 units • This Network converter covers 2 refrigerant systems.
	Network converter for LonWorks	UTY-VLGX	1*1	Maximum controllable indoor units: 128
	KNX converter for VRF	UTY-VKGX	9*1	Maximum controllable indoor units: 128
	KNX converter for indoor unit	UTY-VKSX	—	Maximum controllable indoor units: 1
	Modbus converter for VRF	UTY-VMGX	9*1	Maximum controllable indoor units: 128
	Modbus converter for indoor unit	UTY-VMSX	—	Maximum controllable indoor units: 1
	BACnet gateway (Hardware)	UTY-VBGX	4*1	Maximum controllable indoor units: 128
	BACnet gateway (Software)	UTY-ABGXZ1	1*2	• Maximum controllable VRF network system: 4 • Maximum controllable remote controller group: 1,600 per 4 VRF network system • Maximum controllable indoor units: 1,600 per 4 VRF network system • Maximum controllable group: 1,600 per 4 VRF network system
	Wireless LAN adapter	UTY-TFSXZ1	—	Connected to each indoor unit

SYSTEM DESIGN

SYSTEM DESIGN

Exterior	Part name	Model name	Max. number	Remarks
	Signal amplifier	UTY-VSGXZ1	8	Signal amplifier is required when 500 m or more in transmission cable length or connected units exceed 64 units.
	External switch controller	UTY-TERX UTY-TEKX	—	Maximum controllable indoor units: 16
	Service tool	UTY-ASGXZ1	1*3	• PC: Locally purchased • USB adapter is required.
	Web monitoring tool	UTY-AMGXZ1	1*2*3	• PC: Locally purchased • Up to 4 VRF network system can be observed with one Web monitoring tool.

NOTES:

- *1: For 1 VRF network system, total number of Touch panel controller, Central remote controller, Network converter for Group remote controller, KNX converter for VRF, Modbus converter for VRF, BACnet gateway (Hardware) is 16, including 1 Network converters for LonWorks.
- *2: Different VRF series may be connected for each of the 4 VRF networks supported by the product, but different series may not coexist within the same network. (VR-IV, J-IV, J-IVS, J-IVL, VR-II, V-III, J-III, J-IIS, and J-IIIL can exist together in same network. V and S can exist together in same network, too.)
- *3: 1 Service tool or 1 Web monitoring tool can be connected.

SYSTEM DESIGN

● How to count units in a network segment

Each unit must be counted in the network segment as in the table below.

Unit		Model name	Count
Outdoor unit (each)		—	1
Indoor unit (each)		—	1
Controller	System controller	UTY-APGXZ1	1
	System controller lite	UTY-ALGXZ1	1
	Touch panel controller	UTY-DTG∗Z1	1
	Central remote controller	UTY-DCG∗Z∗	1
	Group remote controller	UTY-CGG∗	0
	Wired remote controller (Touch panel)	UTY-RNR∗Z∗	0
	Wired remote controller	UTY-RLR∗	0
	Wired remote controller	UTY-RNK∗	0
	Simple remote controller (With operation mode)	UTY-RSR∗ UTY-RSK∗	0
	Simple remote controller (Without operation mode)	UTY-RHR∗ UTY-RHK∗	0
	Wireless remote controller	UTY-LNH∗	0
	IR receiver unit for all duct, 3D flow cassette types	UTY-TRHX	0
	IR receiver unit for all duct type	UTB-YWC	0
	IR receiver unit for 4-way flow cassette type	UTY-LRH∗B1	0
	IR receiver unit for circular flow cassette type	UTY-LBHXD	0
	Human sensor kit for circular flow cassette type	UTY-SHZXC	0
	Remote sensor unit	UTY-XSZX	0
Adaptor/ Convertor	Network converter	UTY-VTGX UTY-VTGXV UTY-VGGXZ1	1
	Network converter for LonWorks	UTY-VLGX	1
	KNX converter for VRF	UTY-VKGX	1
	KNX converter for indoor unit	UTY-VKSX	0
	Modbus converter for VRF	UTY-VMGX	1
	Modbus converter for indoor unit	UTY-VMSX	0
	BACnet gateway (Hardware)	UTY-VBGX	1
	BACnet gateway (Software)	UTY-ABGXZ1	1
	Wireless LAN adapter	UTY-TFSXZ1	0
	Signal amplifier	UTY-VSGXZ1	1*
	External switch controller	UTY-TERX UTY-TEKX	0
Maintenance	Service tool	UTY-ASGXZ1	1
	Web monitoring tool	UTY-AMGXZ1	1
Option	Other optional parts	—	0

* : Signal amplifier should be count per each network segment.

SYSTEM DESIGN

1-3. Installation place

■ Outdoor unit

For installing the outdoor unit, select a place where satisfies following conditions.

- A place where satisfies the installation space described in "Installation space" in Chapter 3. OUTDOOR UNITS on page 03-4.
- A place where the unit can be installed horizontally.
- A place with enough space for performing pipe work, service, and maintenance.
- A place where satisfies the pipe limitations of height and length between the outdoor units to be connected.

For satisfactory operation of the air conditioner, install the outdoor unit with referring the outlines described in the installation manual.

● Installation limitation

Do not install at the place of following conditions:

- A place exposed to strong or seasonal winds
- A place where the blown air accumulate
- A place where there are obstructions to the air near to the inlet and outlet
- A place exposed to radiation from other heat sources
- A place where the discharged air will affect animals or plants
- A place where the noise and hot air will disturb the neighbor
- A place that transmit noise or vibration
- A place where drain water is problem
- A place where snow accumulate
- A place where is affected easily by electrical noise
- A place where children can reach
- A place where there is danger of the generation, influx, or accumulation of flammable gas
- A place that have a special environment such as large amount of oil, vapor, or sulfide gas

SYSTEM DESIGN

● Precaution for installation place

- Install the outdoor unit in a position where its tilts is 3 degrees or less. However, do not install the unit with it tilted towards the side containing the compressor.
- Install the outdoor unit on the place with strong installation fixings, which can sufficiently bear the product weight
- When installing the multiple units at one place, secure enough outlet space to prevent a effect of short circuit.
- In cold or snowy regions, make sure that installation position is high enough, and install a snow protection hood.
- Drain water is discharged from the outdoor unit during operation, so make sure that this drain water is possible to flow.
- Use material such as vibration-resistant rubber to prevent the transmission of vibration to the floor.
- Securely fix the unit when it may be in a position exposed to strong winds.

⚠ CAUTION

- If the unit is installed in a region that is exposed to high winds, freezing conditions, freezing rain, snow fall or heavy snow accumulation, take appropriate measures to protect it from those elements.
- To ensure stable operation, the outdoor unit must be installed on a raised stand or rack, at or above the anticipated snow depth for the region.
- The installation of snow hoods and drift prevention fencing is recommended when blowing and drifting snow is common to the region.

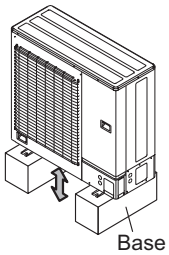

SYSTEM DESIGN

■ Indoor unit

For installing the indoor unit, with considering your customer's request select a place where satisfies following conditions.

- Install the unit level on a strong wall, floor, ceiling, which is not subject to vibration.
- The inlet and outlet ports should not be obstructed. The air should be able to blow all over the room.
- Install the unit where the connection pipe can be easily installed.
- Install the unit where the drain pipe can be easily installed.
- Take servicing, etc. into consideration and leave the spaces. Also install the unit where the filter can be removed.
- Install the unit where satisfy the pipe length and height.

Also, install the unit at a place of following conditions:

- A well-ventilated place avoiding rains and direct sunlight.
- A place where air from the outlet and noise do not disturb the neighbor.
- A place that can withstand the weight of the indoor unit and install positively so that the unit will not topple or fall.
- A place where drainage does not cause any trouble.

For satisfactory operation of the air conditioner, install the indoor unit with referring the outlines described in the installation manual.

● Installation limitation

Do not install the unit the place of following conditions:

- A place where there is the danger of flammable gas leakage.
- A place near heat sources and the location with high temperature.
- A place near a source of heat, steam, or flammable gas.
- A place where there is oily smoke, machine oil (i.e. factory), salty environment with direct sea breeze, and too much of dust.

Mind the following when installing or using the unit:

- Install with the lowest moving parts at least 2.4 m above floor or grade level.
- Install the indoor and outdoor units, power wiring, signal wiring and remote control wiring 1 m away from televisions and radios to avoid distorted images and noise. (However, distorted images and noise may not be avoidable even if the units and wiring mentioned above are installed 1 m away from televisions and radios depending on conditions of the electromagnetic disturbance.)
- When installing an indoor unit in a small room, a care must be taken to keep refrigerant concentrations from exceeding limitations if there is a refrigerant leak.
- Control may not operate correctly if the unit is installed near machinery which emit electromagnetic waves.
- A sound might be heard from the indoor unit such as a refrigerant flowing sound. For using in small and quiet room such as bed room or hotel guest room, select the unit which has not exposed inside the room (Ex. Duct type) or the unit which connects EV kit separately (Ex. Wall mounted type (EEV external model) + EV kit).
- If children may approach the unit, take preventive measures so that they cannot reach the unit.
- Welded parts may be damaged if the unit is installed where corrosive gases such as sulphuric acid are generated.
- Do not use the unit for air conditioning or saving precision instrument, food, art, plants, and animal as special place.

SYSTEM DESIGN

2. Piping design

2-1. Important items when using refrigerant (R410A)

R410A operates at higher pressure and has less solubility with mineral oil than traditional R22 refrigerant. Therefore, R410A systems use a different lubricant and have different piping requirements.

- **Refrigerant piping material and wall thickness**
  Only seamless copper tubes should be used for refrigerant piping. Thickness of tubes are shown in table below.
  Endurance pressure of the pipes must be 4.2 MPa.

- **Lubricant**

Refrigerant	R410A (Mixed refrigerant)
Lubricant	Synthetic oil

- **Tools**
  R410A work requires a number of special tools. The items below (with * symbol) are specialized for R410A. Make sure that R22 tools cannot be used on R410A systems.

Tool name	Process and application	
Pipe cutter	Pipe cutting	Refrigerant piping work
Flaring tool*	Pipe flaring work	
Torque wrench*	Flare nut connection	
Expander	Expansion at pipe connection	
Pipe bender	Pipe bending work	
Nitrogen gas	Pipe interior oxidation prevention	Air pressure test
Welder	Pipe brazing	
Gauge manifold*	Vacuum evacuation and refrigerant charging operation check	Air pressure test through Refrigerant additional charging
Charging hose*		
Vacuum pump (with adapter)*		Vacuum drying
Electronic scale for refrigerant charging		Refrigerant additional charging
Gas leak tester*	Gas leakage test	

*: For details, refer to the service manual.

SYSTEM DESIGN

■ Work flow example

Preparations

Prepare schedule of works

↓

Refrigerant check

- Always check the refrigerant to be used.
- Always use the specified refrigerant.
- Prepare materials/tools matched to refrigerant

↓

Operation chart preparation

↓

Start of work

Indoor unit installation

↓

Refrigerant piping work

- Use copper tube of specified material and thickness to meet endurance pressure of the pipe. (4.2 MPa)
- Do not use pipe with dust and dirt sticking to it during piping connection work.
- Always flow dry nitrogen through piping while brazing.

↓

Drain piping work

↓

Duct work

↓

Insulation work

↓

Remote controller installation

↓

Electrical wiring work — Do not connect to the power supply.

↓

Outdoor unit foundation work

↓

Outdoor unit installation

SYSTEM DESIGN

↓

Indoor unit connection check

↓

Address setting

↓

Refrigerant piping connection (Outdoor unit)

↓

Leak pressure test

- Seal with nitrogen up to 4.2 MPa.
- After 24 hours, check whether the pressure in piping has not descended.

↓

Vacuum evacuation and drying

- Do not purge system with refrigerant.
- Use a vacuum pump with check valve to prevent the back flow of vacuum pump oil into the refrigerant system.

↓

Additional refrigerant charge

Calculate additional refrigerant charge. Add additional refrigerant with R410A gage manifold and hose.

↓

Gas leakage check

↓

Outside panel installation

↓

Test run and adjustment

End of work

↓

Hand over

↓

Customer training

SYSTEM DESIGN

2-2. Piping limitation

For proper system operation, keep all the piping limitation mentioned here.

⚠ CAUTION

- **Allowable height difference:**
  - If the height difference between indoor unit and outdoor unit is larger than the allowable value:
    - The pressure loss will be larger. → Insufficient cooling and heating
    - The refrigerant in liquid pipe will flush. → Refrigerant flow noise generate at indoor unit
    - The refrigerant oil will not return.
      → Insufficient refrigerant oil resulting in compressor damage
  - If the height difference between indoor units is larger than the allowable value:
    - The refrigerant flow balance will be poor. → Insufficient cooling and heating (poor balance)
    - Refrigerant oil will collect in the piping or non-operating indoor units.
      → Insufficient refrigerant oil resulting in compressor damage
- **Piping length:**
  If the piping length is longer than prescribed:
  - The pressure loss will be larger. → Insufficient cooling and heating
  - Too much refrigerant will be charged. → Liquid backs up resulting in compressor damage
  - The refrigerant oil will not return. → Insufficient refrigerant oil resulting in compressor damage
- **Pipe size:**
  - If the pipe size is larger than designated size:
    - The refrigerant flow velocity will drop. Refrigerant oil will not return to the outdoor unit.
      → Insufficient refrigerant oil resulting in compressor damage
    - The refrigerant in liquid pipe will flush easily. → Insufficient cooling and heating
  - If the pipe size is smaller than designated size:
    - The refrigerant circulation volume will drop. → Insufficient cooling and heating
    - The pressure loss will be larger. → Insufficient cooling and heating
- **Indoor unit connected capacity:**
  - If the indoor unit connected capacity is larger than the system capacity:
    - Insufficient system performance. → Insufficient cooling and heating
    - When heating, refrigerant will collect in non-operating indoor units resulting in an insufficient refrigerant circulation volume. → Insufficient cooling and heating
    - The refrigerant oil will not return. → Compressor damage
  - If the indoor unit connected capacity is too small compared to the system capacity:
    - The liquid return will be too great. → Compressor damage
    - The refrigerant will concentrate in the outdoor unit.
      → Continuous operation will become difficult due to the outdoor unit stopping due to high head pressure. Also, excessive noise will be generated by the refrigerant flow when in heating mode.

SYSTEM DESIGN

■ Limitation

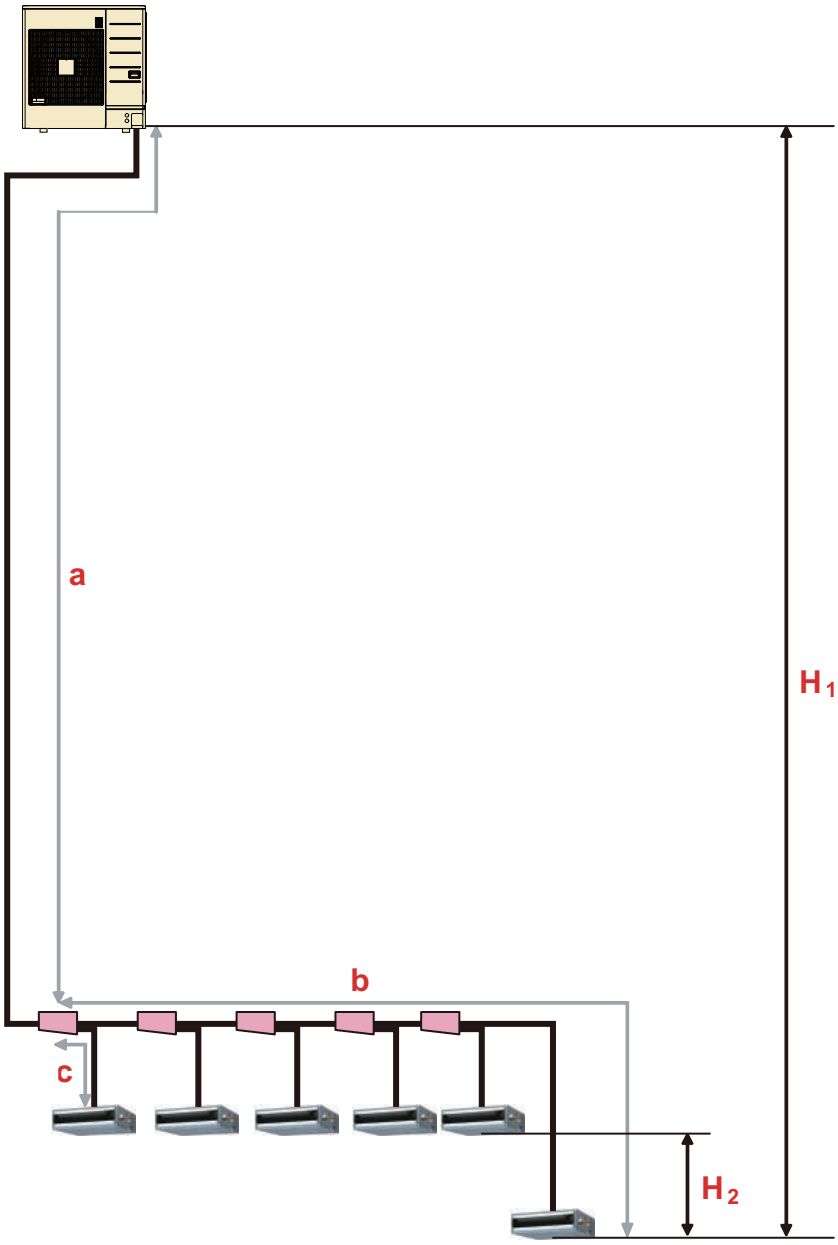

Limitation		Diagram
Allowable pipe length (Actual pipe length)		
Total pipe length	80 m or less*1	Total
Between outdoor unit and the farthest indoor unit	50 m or less	a + b
Between the first separation tube and farthest indoor unit	40 m or less	b
Between outdoor unit and nearest indoor unit	5 m or more	a + c
Between outdoor unit and the first separation tube	3 m or more	a
Allowable height difference		
Between outdoor unit and indoor unit	30 m or less	H1
Between indoor unit	15 m or less	H2

*1: Total pipe length is limited by the condition that total refrigerant amount should not exceed the following value.

- 6.83 kg

SYSTEM DESIGN

2-3. Pipe size

After referring to cooling capacity table below, select each Pipe size, Separation tube, and Header from the cooling capacity of outdoor unit and indoor unit connected in the system.

NOTE: For pipe diameter, material, and wall thickness, refer to "Important items when using refrigerant (R410A)" on page 06-17.

■ Cooling capacity table

● Outdoor unit

HP	Model name	Cooling capacity (kW)	Connectable indoor unit
4	AJ∗040LCLDH	12.1	1 to 11
5	AJ∗045LCLDH	14.0	1 to 12
6	AJ∗054LCLDH	15.1	1 to 13

SYSTEM DESIGN

● Indoor unit

Type	Rated capacity (kW)		Model name	Dimensions	Remarks
	Cooling	Heating		H × W × D	
Compact cassette	1.1	1.3	AUXB004GLEH	245 × 570 × 570	Cassette grille: UTG-UF∗E-W UTG-UF∗C-W
	2.2	2.8	AUXB007GLEH		
	2.8	3.2	AUXB009GLEH		
	3.6	4.1	AUXB012GLEH		
	4.5	5.0	AUXB014GLEH		
	5.6	6.3	AUXB018GLEH		
	7.1	8.0	AUXB024GLEH		
4-way flow cassette	5.6	6.3	AUXD18GALH	246 × 840 × 840	Cassette grille: UTG-UG∗A-W
	7.1	8.0	AUXD24GALH		
	9.0	10.0	AUXA30GALH	288 × 840 × 840	
	10.0	11.2	AUXA34GALH		
	11.2	12.5	AUXA36GALH		
	12.5	14.0	AUXA45GALH		
	14.0	16.0	AUXA54GALH		
Circular flow cassette	2.8	3.2	AUXN009GLAH	246 × 840 × 840	Cassette grille: UTG-UK∗C-W UTG-UK∗A-B
	3.6	4.0	AUXN012GLAH		
	4.5	5.0	AUXN014GLAH		
	5.6	6.3	AUXM018GLEH		
	7.1	8.0	AUXM024GLEH		
	9.0	10.0	AUXM030GLEH		
	5.6	6.3	AUXK018GLEH	288 × 840 × 840	
	7.1	8.0	AUXK024GLEH		
	9.0	10.0	AUXK030GLEH		
	10.0	11.2	AUXK034GLEH		
	11.2	12.5	AUXK036GLEH		
	12.5	14.0	AUXK045GLEH		
	14.0	16.0	AUXK054GLEH		
3D flow cassette	5.6	6.3	AUXS018GLEH	200 × 1,240 × 500	Cassette grille: UTG-US∗A-W
	7.1	8.0	AUXS024GLEH		
One way flow cassette	1.1	1.3	AUXV004GLEH	198 × 785 × 570	Cassette grille: UTG-UN∗A-W
	2.2	2.8	AUXV007GLEH		
	2.8	3.2	AUXV009GLEH		
	3.6	4.0	AUXV012GLEH		
	4.5	5.0	AUXV014GLEH	198 × 1,190 × 570	Cassette grille: UTG-UN∗B-W
	5.6	6.3	AUXV018GLEH		
	7.1	8.0	AUXV024GLEH		
Low static pressure duct (Mini duct)	1.1	1.3	ARXK004GLGH	198 × 700 × 450	
	2.2	2.8	ARXK007GLGH		
	2.8	3.2	ARXK009GLGH		
	3.6	4.0	ARXK012GLGH		
	4.5	5.0	ARXK014GLGH		
	5.6	6.3	ARXK018GLGH	198 × 900 × 450	
	7.1	8.0	ARXK024GLGH	198 × 1,100 × 450	
Low static pressure duct (Slim duct) /Slim concealed floor	2.2	2.8	ARXD007GLEH	198 × 700 × 620	
	2.8	3.2	ARXD009GLEH		
	3.6	4.0	ARXD012GLEH		
	4.5	5.0	ARXD014GLEH		
	5.6	6.3	ARXD018GLEH	198 × 900 × 620	
	7.1	8.0	ARXD024GLEH	198 × 1,100 × 620	
Low static pressure duct (High efficiency)	5.6	6.3	ARXP018GLFH	270 × 1,135 × 700	
	9.0	10.0	ARXP030GLFH		

SYSTEM DESIGN

SYSTEM DESIGN

Type	Rated capacity (kW)		Model name	Dimensions	Remarks
	Cooling	Heating		H × W × D	
Medium static pressure duct	7.1	8.0	ARXA024GLEH	270 × 1,135 × 700	
	9.0	10.0	ARXA030GLEH		
	11.2	12.5	ARXA036GLEH		
	12.5	14.0	ARXA045GLEH		
High static pressure duct	11.2	12.5	ARXC036GTEH	400 × 1,050 × 500	
	12.5	14.0	ARXC045GTEH		
Compact floor	1.1	1.3	AG∗A004GCGH	600 × 740 × 200	
	2.2	2.8	AG∗A007GCGH		
	2.8	3.2	AG∗A009GCGH		
	3.6	4.0	AG∗A012GCGH		
	4.0	4.5	AG∗A014GCGH		
Compact floor (EEV external)	1.1	1.3	AG∗E004GCEH	600 × 740 × 200	EV kit: UTR-EV09XB
	2.2	2.8	AG∗E007GCEH		
	2.8	3.2	AG∗E009GCEH		
	3.6	4.0	AG∗E012GCEH		EV kit: UTR-EV14XB
	4.0	4.5	AG∗E014GCEH		
Floor/Ceiling	3.6	4.0	AB∗A012GTEH	199 × 990 × 655	
	4.5	5.0	AB∗A014GTEH		
	5.6	6.3	AB∗A018GTEH		
	7.1	8.0	AB∗A024GTEH		
Ceiling	9.0	10.0	AB∗A030GTEH	240 × 1,660 × 700	
	11.2	12.5	AB∗A036GTEH		
	12.5	14.0	AB∗A045GTEH		
	14.0	16.0	AB∗A054GTEH		
Wall mounted	1.1	1.3	AS∗A004GCGH	268 × 840 × 203	
	2.2	2.8	AS∗A007GCGH		
	2.8	3.2	AS∗A009GCGH		
	3.6	4.0	AS∗A012GCGH		
	4.0	4.5	AS∗A014GCGH		
	5.6	6.3	AS∗A18GBCH	320 × 998 × 238	
	7.1	8.0	AS∗A24GBCH		
	9.0	10.0	AS∗A030GTEH	340 × 1,150 × 280	
	10.0	11.2	AS∗A034GTEH		
Wall mounted (EEV external)	1.1	1.3	AS∗E004GCEH	268 × 840 × 203	EV kit: UTR-EV09XB
	2.2	2.8	AS∗E007GCEH		
	2.8	3.2	AS∗E009GCEH		
	3.6	4.0	AS∗E012GCEH		EV kit: UTR-EV14XB
	4.0	4.5	AS∗E014GCEH		

SYSTEM DESIGN

■ Pipe size selection

Use the following tables to select the Refrigeration Pipe Size, Separation tube and Header.

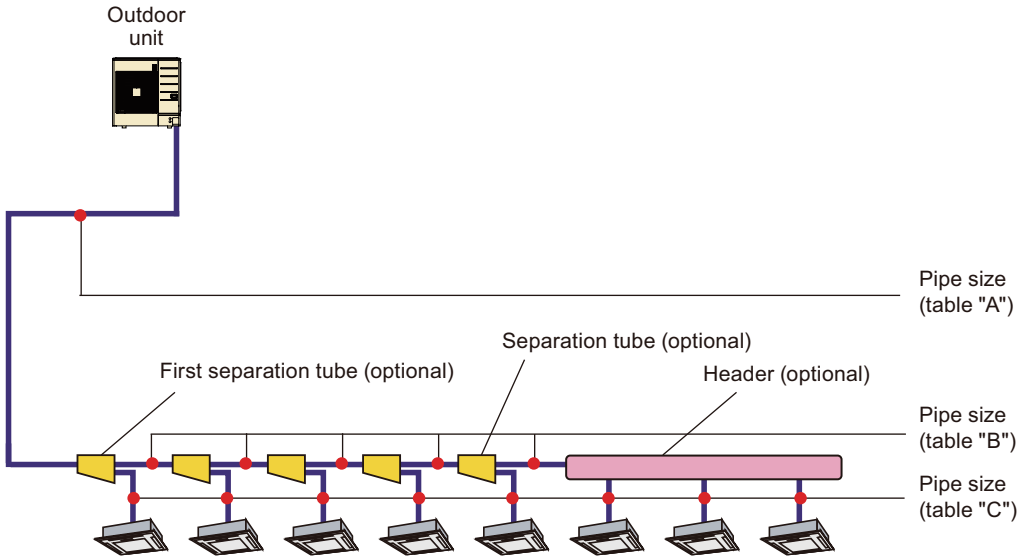

- **Pipe size table "A"**
  Between outdoor unit and the first separation tube (header)

HP	Outdoor unit model code	Outdoor unit cooling capacity	Outside diameter	
			Liquid pipe	Gas pipe
		kW	mm (in)	
4	40	12.1	9.52 (3/8)	15.88 (5/8)
5	45	14.0	9.52 (3/8)	15.88 (5/8)
6	54	15.1	9.52 (3/8)	15.88 (5/8)

- **Pipe size table "B"**
  Between Separation tube and Separation tube (Header)

Total cooling capacity of indoor unit	Outside diameter	
	Liquid pipe	Gas pipe
kW	mm (in)	
2.2 to 19.6	9.52 (3/8)	15.88 (5/8)

- **Pipe size table "C"**
  Between Separation tube (Header) and indoor unit

Indoor unit model code	Indoor unit cooling capacity	Outside diameter	
		Liquid pipe	Gas pipe
	kW	mm (in)	
04, 07, 09, 12, 14	1.1, 2.2, 2.8, 3.6, 4.5	6.35 (1/4)	12.70 (1/2)
18, 24, 30, 34	5.6, 7.1, 9.0, 10.0	9.52 (3/8)	15.88 (5/8)
36, 45, 54	11.2, 12.5, 14.0	9.52 (3/8)	19.05 (3/4)

NOTE: If the selected pipe diameter between Separation tube (Header) and indoor unit (based on the table "C") becomes larger than the pipe diameter between Separation tube and Separation tube (Header) (based on the table "B"), select the pipe whose diameter is equal to the one between Separation tube and Separation tube (Header).

(If pipe diameter C > B, select pipe size from table B)
It is necessary to change a connection pipe diameter using reducer.

SYSTEM DESIGN

■ Optional parts selection

● Indoor unit

- **EV kit**

Model	Applicable indoor unit	
	Type	Model
UTR-EV09XB	Wall mounted	AS∗E004GCEH, AS∗E007GCEH, AS∗E009GCEH
	Compact floor	AG∗E004GCEH, AG∗E007GCEH, AG∗E009GCEH
UTR-EV14XB	Wall mounted	AS∗E012GCEH, AS∗E014GCEH
	Compact floor	AG∗E012GCEH, AG∗E014GCEH

- **Separation tube**

Total cooling capacity of indoor unit (kW)	Model name
19.6 or less	UTP-AX054A

- **Header**

Total cooling capacity of indoor units (kW)	3 to 6 Branches	3 to 8 Branches
28.0 or less	UTR-H0906L	UTR-H0908L

SYSTEM DESIGN

2-4. Selection of pipe heat insulating material

Always insulate the refrigerant pipe to prevent condensation and water droplets by the refrigerant pipe. For selection of pipe heat insulating material, refer to following items.

- Decide the thickness of the heat insulating material by referring to the recommended minimum thickness in Table 1. (For installation condition T = 32 °CDB), humidity ≤ 70%, humidity ≤ 75%, humidity ≤ 80%, humidity ≤ 85%)

  Table 1. Size of refrigerant pipe and recommended minimum thickness of heat insulating material
  In case a heat insulating material which thermal conductivity is equal to or less than 0.040 W/(m•k) is used.

- When the outdoor unit is installed in a higher position than the indoor unit, fill the connecting part gap with putty, etc. to prevent the dew condensation water of the valve of the outdoor unit from flowing to the indoors from the gap between the pipe and the heat insulating material.
- Liquid pipe and gas pipe should be completely insulated with same specification.
- Water may leak from the refrigerant lines if the insulation is not completely sealed.
- In application where the ambient temperature and humidity exceed 32 °CDB and 85% relative humidity, increase the size of the pipe insulation. It may also be necessary to insulate the indoor unit casing. Condensation may form on the insulation in these conditions if the thickness of the insulation is not increased.
- Since the gas line gets very hot during heating operation, select a pipe insulating material rated for at least 120 °C.

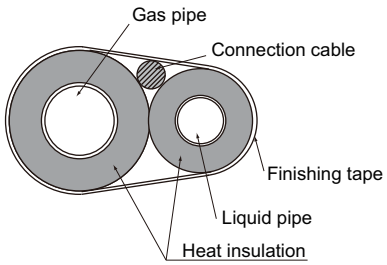

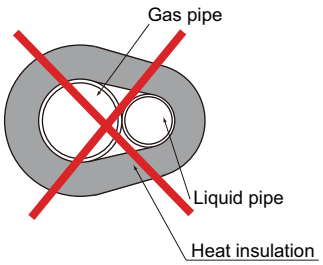

- Make sure that pipe is covered completely by the heat insulation, not exposing to air. Inadequate heat insulation may cause condensation.
- Do not cover heat insulation gas and liquid pipes together as figure below. It may cause condensation and capacity drop by heat loss.

SYSTEM DESIGN

2-5. Additional charge calculation

NOTES:

- The outdoor unit is charged refrigerant at the factory.
- Additional refrigerant required to be charged on site depending on pipe length and outdoor unit model.
- The additional refrigerant charge amount is calculated according to the following formula.
- Round up the calculated result to two decimal places.

■ Calculation formula

- **Calculation of additional amount for pipe length (A)**

Diameter of liquid pipe	a: Additional amount for pipe length
mm	kg/m
Ø6.35	0.021
Ø9.52	0.058

A =	Total length of Ø9.52 mm liquid pipe m	a: × 0.058 kg/m	+	Total length of Ø6.35 mm liquid pipe m	a: × 0.021 kg/m	=
	kg			kg		

Total kg

A = kg Round up A to 2 decimal place.

- **Factory charge amount (B)**

Model name	HP	b: Factory charged amount
		kg
AJ∗040LCLDH	4	4.00
AJ∗045LCLDH	5	4.00
AJ∗054LCLDH	6	4.00

B =	b: Outdoor unit Factory charge amount
	kg

SYSTEM DESIGN

SYSTEM DESIGN

- **Total refrigerant amount check (C)**

C = A + B = [kg]

NOTES:

- Check the total refrigerant amount under the following conditions.

Condition
Total amount of refrigerant (C) ≤ 6.83 kg

- When total refrigerant amount exceed limitation:
  - Reduce pipe length for refrigerant system.
  - Change the refrigerant system configuration.

SYSTEM DESIGN

2-6. Piping design example

■ Example 1

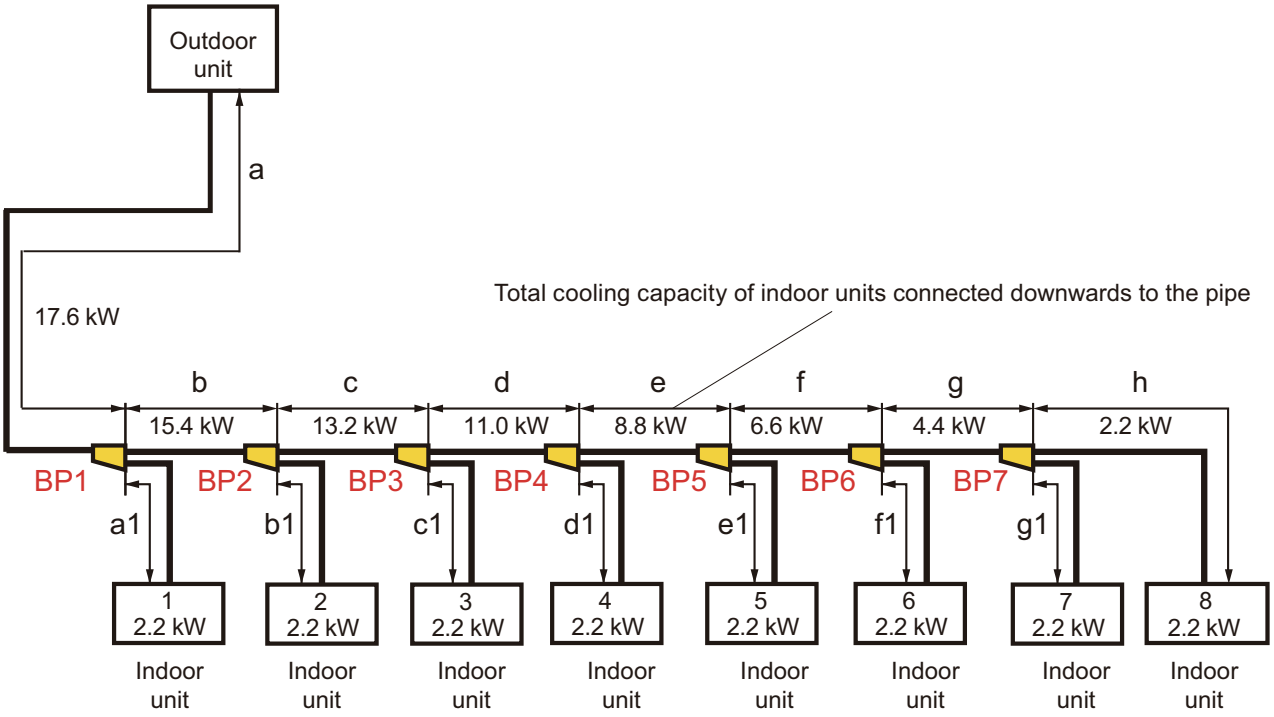

- **System configuration**

Indoor unit	Model name	Capacity (kW)
1	ARXD007GLEH	2.2
2	ARXD007GLEH	2.2
3	ARXD007GLEH	2.2
4	ARXD007GLEH	2.2
5	ARXD007GLEH	2.2
6	ARXD007GLEH	2.2
7	ARXD007GLEH	2.2
8	ARXD007GLEH	2.2
Total capacity		17.6

Outdoor unit	Model name	Capacity (kW)
1	AJ∗045LCLDH	14.0
Total capacity		14.0

- **Capacity ratio**
  (Total capacity of indoor unit)/(Total capacity of outdoor unit)
  = 17.6 / 14.0 = 125.7% (Within 50% to 130%)

- **Selection of Separation tube**

Branch kit no.	Model name	Quantity
BP1	UTP-AX054A	7
BP2		
BP3		
BP4		
BP5		
BP6		
BP7		

SYSTEM DESIGN

- **Selection of pipe size**

Pipe no.	Pipe diameter (mm)		Length example (m)
	Liquid pipe	Gas pipe	
a	Ø9.52	Ø15.88	10
a1	Ø6.35	Ø12.70	5
b	Ø9.52	Ø15.88	4
b1	Ø6.35	Ø12.70	5
c	Ø9.52	Ø15.88	4
c1	Ø6.35	Ø12.70	5
d	Ø9.52	Ø15.88	4
d1	Ø6.35	Ø12.70	5
e	Ø9.52	Ø15.88	4
e1	Ø6.35	Ø12.70	5
f	Ø9.52	Ø15.88	4
f1	Ø6.35	Ø12.70	5
g	Ø9.52	Ø15.88	4
g1	Ø6.35	Ø12.70	5
h	Ø6.35	Ø12.70	5

- **Limitation check**

Pipe	Diagram	Example	Limitation	Judge
		m		
Total pipe length	Total	74	80 or less	OK
Between outdoor unit and farthest indoor unit	a + b + c + d + e + f + g + h	39	50 or less	OK
Between the first separation tube and the farthest indoor unit	b + c + d + e + f + g + h	29	40 or less	OK
Between outdoor unit and the nearest indoor unit	a + a1	15	5 or more	OK
Between outdoor unit and the first separation tube	a	10	3 or more	OK

- **Calculation of additional charge refrigerant**
  - **Calculation of additional amount for pipe length (A)**

Diameter of liquid pipe (mm)	Additional amount for pipe length (kg/m)	Liquid pipe length (m)
Ø9.52	0.058	34
Ø6.35	0.021	40

A = (0.058 kg × 34 m) + (0.021 kg × 40 m) = 2.81 (kg)

  - **Calculation of factory charge amount (B)**

Outdoor unit	Model name	Factory charge amount (kg)
1	AJ∗045LCLDH	4.00

B = 4.00 (kg)

  - **Total refrigerant amount check (C)**
    C = A + B = 2.81 + 4.00 = 6.81 (kg) < 6.83 (kg) → OK

Check pipe length and height difference between the units by comparing with "Piping limitation" on page 06-20.

SYSTEM DESIGN

■ Example 2

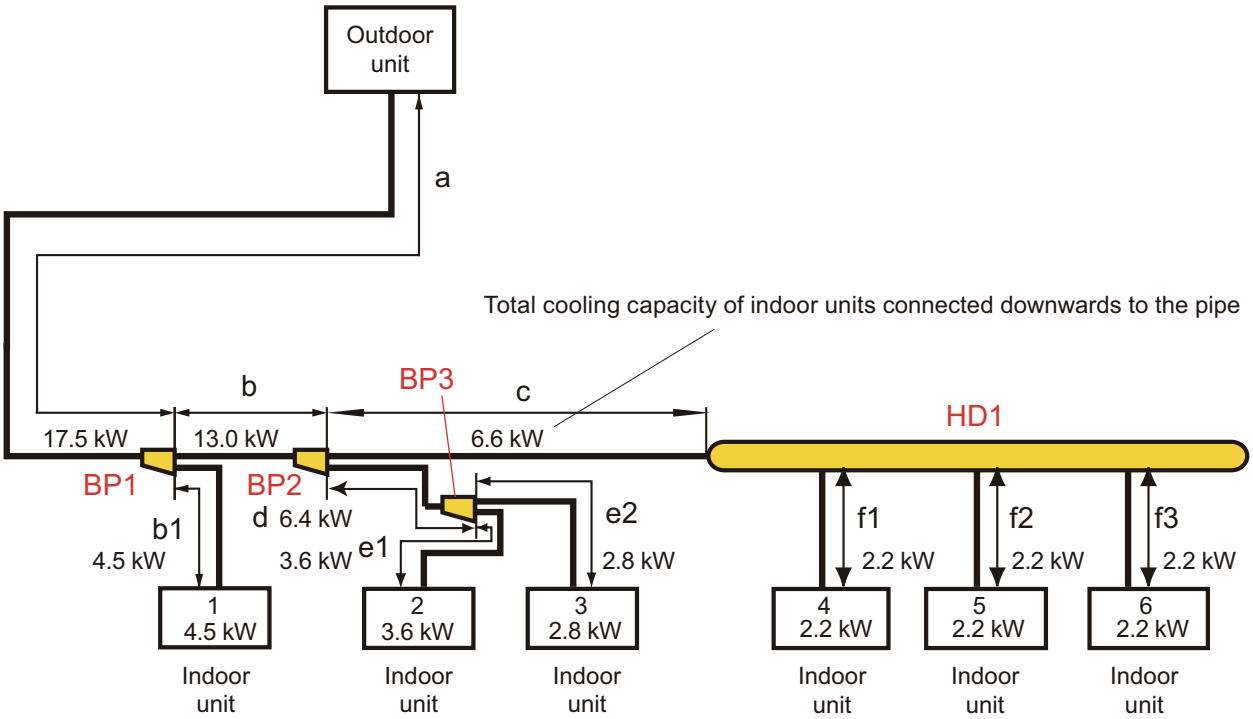

- **System configuration**

Indoor unit	Model name	Capacity (kW)
1	ARXD014GLEH	4.5
2	ARXD012GLEH	3.6
3	ARXD009GLEH	2.8
4	ARXD007GLEH	2.2
5	ARXD007GLEH	2.2
6	ARXD007GLEH	2.2
Total capacity		17.5

Outdoor unit	Model name	Capacity (kW)
1	AJ∗045LCLDH	14.0
Total capacity		14.0

- **Capacity ratio**
  (Total capacity of indoor unit)/(Total capacity of outdoor unit)
  = 17.5 / 14.0 = 125.0% (Within 50% to 130%)

- **Selection of Separation tube and Header**

Branch kit no.	Model name	Quantity
BP1	UTP-AX054A	3
BP2		
BP3		
HD1	UTR-H0906L	1

SYSTEM DESIGN

- **Selection of pipe size**

Pipe no.	Pipe diameter (mm)		Length example (m)
	Liquid pipe	Gas pipe	
a	Ø9.52	Ø15.88	10
b	Ø9.52	Ø15.88	5
b1	Ø6.35	Ø12.70	5
c	Ø9.52	Ø15.88	10
d	Ø9.52	Ø15.88	5
e1	Ø6.35	Ø12.70	5
e2	Ø6.35	Ø12.70	5
f1	Ø6.35	Ø12.70	5
f2	Ø6.35	Ø12.70	5
f3	Ø6.35	Ø12.70	5

- **Limitation check**

Pipe	Diagram	Example	Limitation	Judge
		m		
Total pipe length	Total	60	80 or less	OK
Between outdoor unit and farthest indoor unit	a + b + c + f3	30	50 or less	OK
Between the first separation tube and the farthest indoor unit	b + c + f3	20	40 or less	OK
Between outdoor unit and the nearest indoor unit	a + b1	15	5 or more	OK
Between outdoor unit and the first separation tube	a	10	3 or more	OK

- **Calculation of additional charge refrigerant**
  - **Calculation of additional amount for pipe length (A)**

Diameter of liquid pipe (mm)	Additional amount for pipe length (kg/m)	Liquid pipe length (m)
Ø9.52	0.058	30
Ø6.35	0.021	30

A = (0.058 kg × 30 m) + (0.021 kg × 30 m) = 2.37 (kg)

  - **Calculation of factory charge amount (B)**

Outdoor unit	Model name	Factory charge amount (kg)
1	AJ∗045LCLDH	4.00

B = 4.00 kg

  - **Total refrigerant amount check (C)**
    C = A + B = 2.37 + 4.00 = 6.37 (kg) < 6.83 (kg) → OK

Check pipe length and height difference between the units by comparing with "Piping limitation" on page 06-20.

SYSTEM DESIGN

■ Example 3

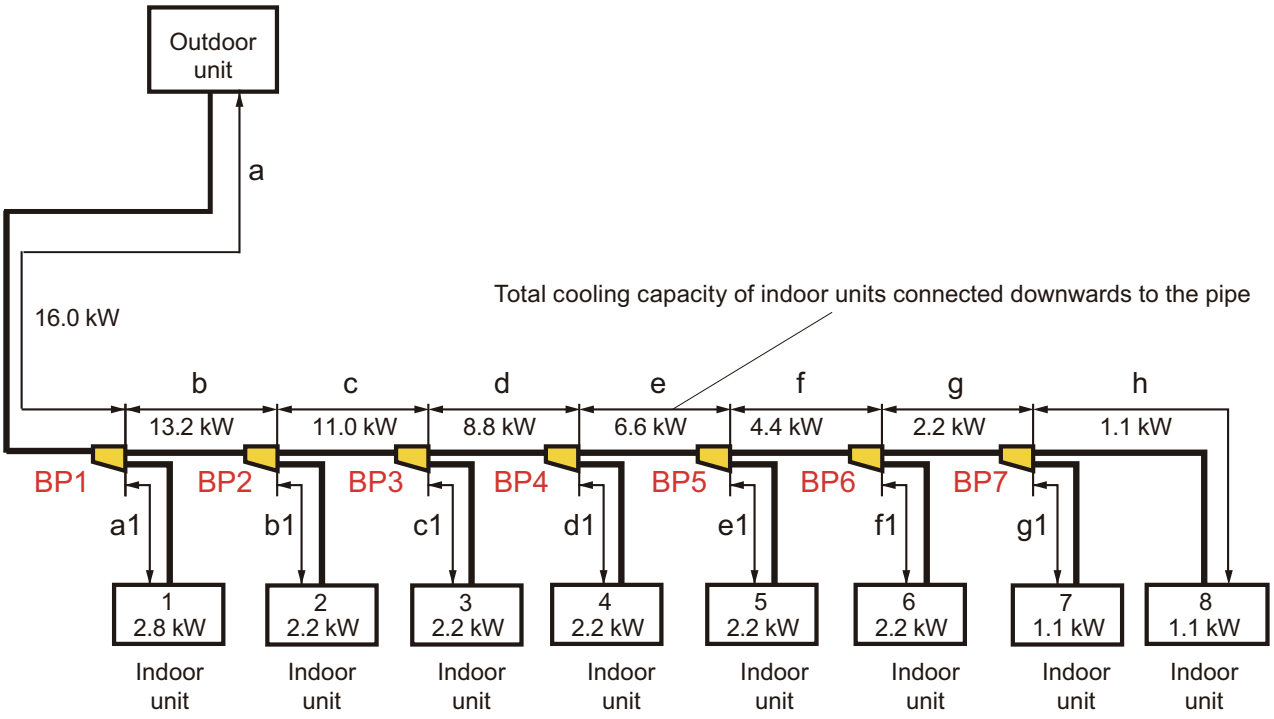

- **System configuration**

Indoor unit	Model name	Capacity (kW)
1	ARXD009GLEH	2.8
2	ARXD007GLEH	2.2
3	ARXD007GLEH	2.2
4	ARXD007GLEH	2.2
5	ARXD007GLEH	2.2
6	ARXD007GLEH	2.2
7	ARXK004GLGH	1.1
8	ARXK004GLGH	1.1
Total capacity		16.0

Outdoor unit	Model name	Capacity (kW)
1	AJ∗045LCLDH	14.0
Total capacity		14.0

- **Capacity ratio**
  (Total capacity of indoor unit)/(Total capacity of outdoor unit)
  = 16.0 / 14.0 = 114.3% (Within 50% to 130%)

- **Selection of Separation tube**

Branch kit no.	Model name	Quantity
BP1	UTP-AX054A	7
BP2		
BP3		
BP4		
BP5		
BP6		
BP7		

SYSTEM DESIGN

SYSTEM DESIGN

- **Selection of pipe size**

Pipe no.	Pipe diameter (mm)		Length example (m)
	Liquid pipe	Gas pipe	
a	Ø9.52	Ø15.88	10
a1	Ø6.35	Ø12.70	5
b	Ø9.52	Ø15.88	4
b1	Ø6.35	Ø12.70	5
c	Ø9.52	Ø15.88	4
c1	Ø6.35	Ø12.70	5
d	Ø9.52	Ø15.88	4
d1	Ø6.35	Ø12.70	5
e	Ø9.52	Ø15.88	4
e1	Ø6.35	Ø12.70	5
f	Ø9.52	Ø15.88	4
f1	Ø6.35	Ø12.70	5
g	Ø9.52	Ø15.88	4
g1	Ø6.35	Ø12.70	5
h	Ø6.35	Ø12.70	5

- **Limitation check**

Pipe	Diagram	Example	Limitation	Judge
		m		
Total pipe length	Total	74	80 or less	OK
Between outdoor unit and farthest indoor unit	a + b + c + d + e + f + g + h	39	50 or less	OK
Between the first separation tube and the farthest indoor unit	b + c + d + e + f + g + h	29	40 or less	OK
Between outdoor unit and the nearest indoor unit	a + a1	15	5 or more	OK
Between outdoor unit and the first separation tube	a	10	3 or more	OK

- **Calculation of additional charge refrigerant**
  - **Calculation of additional amount for pipe length (A)**

Diameter of liquid pipe (mm)	Additional amount for pipe length (kg/m)	Liquid pipe length (m)
Ø9.52	0.058	34
Ø6.35	0.021	40

A = (0.058 kg × 34 m) + (0.021 kg × 40 m) = 2.81 (kg)

  - **Calculation of factory charge amount (B)**

Outdoor unit	Model name	Factory charge amount (kg)
1	AJ∗045LCLDH	4.00

B = 4.00 (kg)

  - **Total refrigerant amount check (C)**
    C = A + B = 2.81 + 4.00 = 6.81 (kg) < 6.83 (kg) → OK

Check pipe length and height difference between the units by comparing with "Piping limitation" on page 06-20.

SYSTEM DESIGN

3. Piping connection

Keep the permissible length of every piping limitation to prevent a defect or cooling/heating failure.

⚠ CAUTION

- **Piping material:**
  - Use the designated size (diameter and thickness) of refrigerant pipes.
  - Those pipes purchased locally may contain dust inside. Use dry nitrogen to blow out any dust.
  - Do not use standard pipe tees for branches, these can cause uneven refrigerant flow to the indoor units. Optionally available standard branch kits should be used instead.

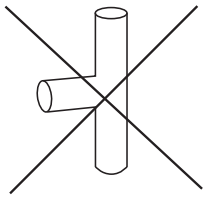	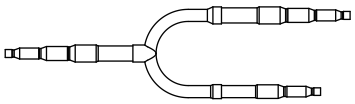	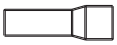
T-tube **Prohibited**	Separation tube **OK**	Reducer

  - When replacing the unit, never use piping which has been used for previous installations. Only use the new piping.

- **Piping preparation and installation:**
  - Make sure that no dust or water enters the pipe during preparation or installation.
  - When installing the pipe, make bends as few as possible, and make radius as large as possible.
  - Cut the branch kit at the right size or use the reducer to match the pipe to the branch kit.

- **Piping treatment:**
  - The pipes vibrate, expand, and contract during operation, so if loads are concentrated in one area, it could cause cracks in the pipes. Provide the pipe supports every 2 to 3 m.
  - Make sure to insulate the refrigeration pipes separately with appropriately sized insulation as described earlier. Make sure to overlap the ends to prevent any gap.

- **Brazing:**
  - While brazing the pipes, be sure to blow dry nitrogen gas through them.

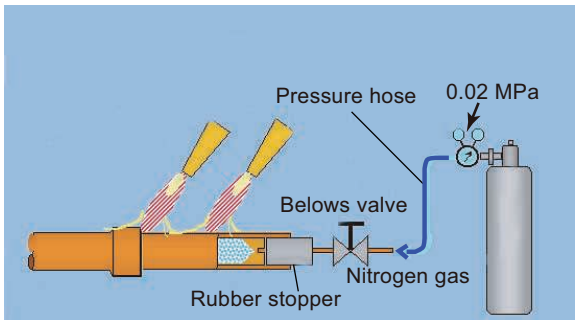

(continued)

SYSTEM DESIGN

⚠ CAUTION

- **Brazing:**
  - If nitrogen gas is not blown through the pipes while they are being brazed, an oxidized layer may form on the inside of the pipes. If this occurs, the cooling efficiency may decrease and it will be caused to damage for compressor and clog the strainer and electronic expansion valve.

    Example: Inside state of brazing pipe section

Nitrogen gas used	Nitrogen gas used but not sufficient (Oxigen gas still inside the pipe)	Nitrogen gas does not used

  - When brazing the pipes, do not use flux. If the flux is chlorine-based, the pipes will corrode and when the flux contains fluorine, the refrigerant oil will deteriorate, etc. Using the flux has an adverse affect on the refrigerant piping system.
  - For brazing materials, use phosphor copper solder that does not require flux.

SYSTEM DESIGN

3-1. Piping to outdoor unit

■ Piping method

● Opening the knockout hole

⚠ CAUTION

- Be careful to prevent panel deformation or damaged while opening the knockout hole.
- To prevent cutting of the wiring after the knockout hole was opened, remove the burrs along the edge. In addition, to prevent rusting, painting the edge with rust preventive paint is recommended.

- Pipes can be connected from 4 directions, front, lateral side, rear side and bottom. (Fig. A)
- When connecting at the bottom, remove the service panel and piping cover on the front of the outdoor unit, and open the knock out hole provided at the bottom corner of the piping outlet.
- When cutting the slits, use a steel saw and cut out the 2 slits as shown in Fig. B and Fig. C.

Fig. A

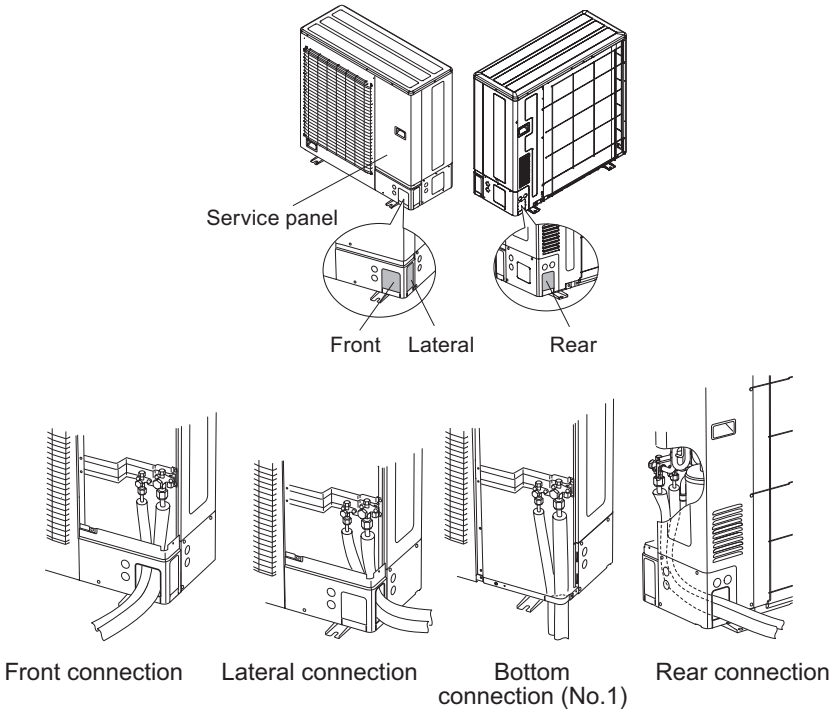

Fig. B

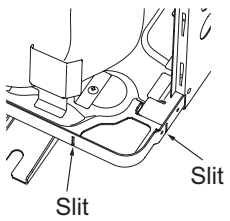

Fig. C

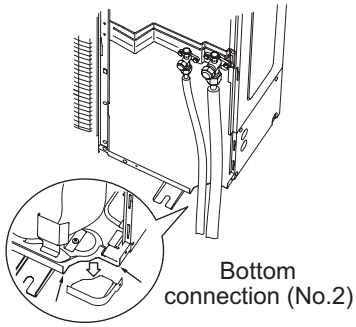

SYSTEM DESIGN

SYSTEM DESIGN

● Pipe connection

⚠ CAUTION

- Be sure to install the pipe against the port on the indoor unit and the outdoor unit correctly. If the centering is improper, the flare nut cannot be tightened smoothly. If the flare nut is forced to turn, the threads will be damaged.
- Do not remove the flare nut from the outdoor unit pipe until immediately before connecting the connection pipe.
- After installing the piping, make sure that the connection pipes do not touch the compressor or outer panel. If the pipes touch the compressor or outer panel, they will vibrate and produce noise.

1. Detach the caps and plugs from the pipes.
2. Center the pipe against the port on the outdoor unit, and then turn the flare nut by hand.
3. Tighten the flare nut of the connection pipe at the outdoor unit valve connector.
4. After tightening the flare nut by hand, use a torque wrench to fully tighten it.

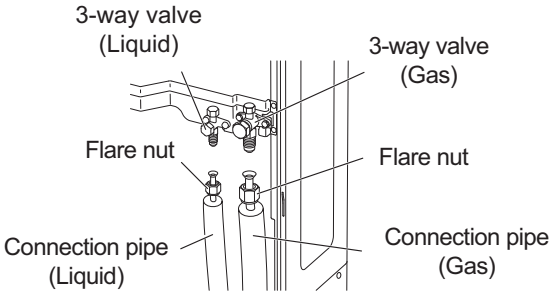

⚠ CAUTION

Hold the torque wrench at its grip, keeping it in a right angle with the pipe, in order to tighten the flare nut correctly.

- Outer panel may be distorted if fastened only with a wrench. Be sure to fix the elementary part with a spanner and fasten with a wrench (refer to below diagram).
- Do not apply force to the blank cap of the valve or hang a wrench, etc., on the cap. It may cause leakage of refrigerant.

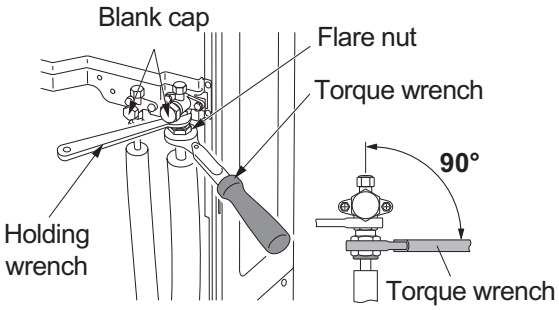

Flare nut	Tightening torque
mm (in)	N·m
Ø6.35 (1/4)	16 to 18
Ø9.52 (3/8)	32 to 42
Ø12.70 (1/2)	49 to 61
Ø15.88 (5/8)	63 to 75
Ø19.05 (3/4)	90 to 110

SYSTEM DESIGN

Handling precautions for the valves

- Mounted part of blank cap is sealed for protection.
- Fasten blank cap tightly after opening valves.

Blank cap	Tightening torque
mm (in)	N·m
Ø6.35 (1/4)	20 to 25
Ø9.52 (3/8)	20 to 25
Ø12.70 (1/2)	25 to 30
Ø15.88 (5/8)	30 to 35
Ø19.05 (3/4)	35 to 40

Operating the valves

- Use a hexagon wrench (size: 4 mm).
- Opening
  1. Insert the hexagon wrench into the valve shaft, and turn it counterclockwise.
  2. Stop turning when the valve shaft can no longer be turned. (Open position)
- Closing
  1. Insert the hexagon wrench into the valve shaft, and turn it clockwise.
  2. Stop turning when the valve shaft can no longer be turned. (Closed position)

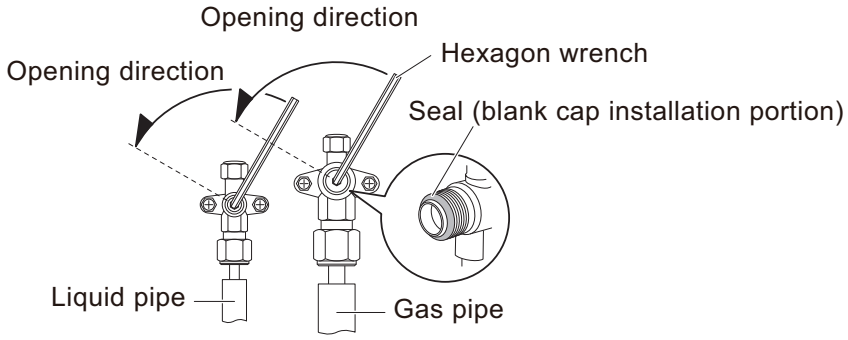

SYSTEM DESIGN

3-2. EV kit

An EV kit must be required for EEV external models on the liquid pipe side.

Following indoor units require EV kit.

Model	Applicable indoor unit	
	Type	Model
UTR-EV09XB	Wall mounted	AS∗E004GCEH, AS∗E007GCEH, AS∗E009GCEH
	Compact floor	AG∗E004GCEH, AG∗E007GCEH, AG∗E009GCEH
UTR-EV14XB	Wall mounted	AS∗E012GCEH, AS∗E014GCEH
	Compact floor	AG∗E012GCEH, AG∗E014GCEH

NOTES:

- A wrong selection could cause improper operation, because the built-in electronic expansion valve is different.
- Select the above indoor unit for use in small and quiet rooms such as hotel or bedroom where noise would be a distraction.

■ Installation place

- Keep the installed piping and wiring length less than 5 m.
  The length between the EV kit and the indoor unit should be included when designing the system.
- EV kit should be considered to install away from the living quarters, such as above the ceiling.
- Install the EV kit where it can be accessed for servicing.

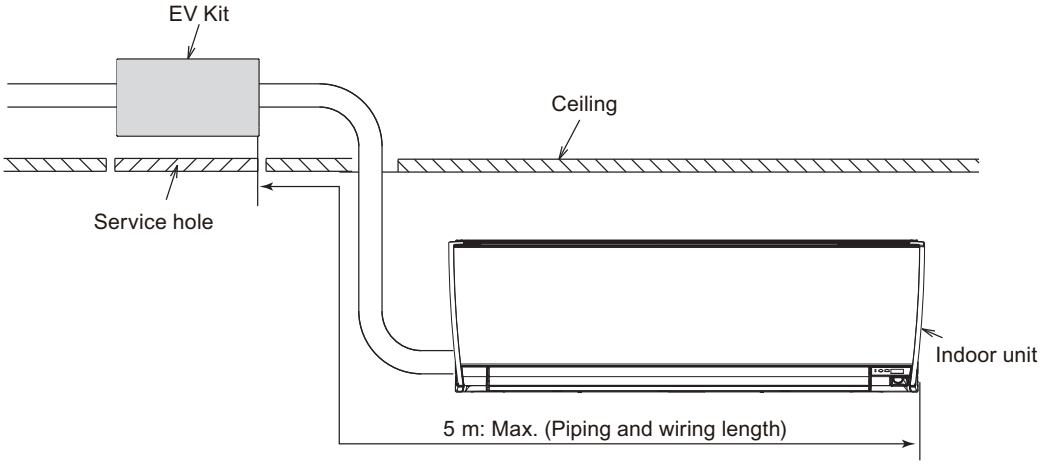

⚠ CAUTION

Do not install EV kit in a place with any of the following conditions.

- Do not install the EV kit outdoor.
- Do not install the EV kit where the danger of combustible gas leakage.
- Do not install the EV kit where near a fire place or other heating apparatus.
- Do not install the EV kit where oily smoke, machine oil (i.e. factory), salty environment with direct sea breeze.
- Do not install the EV kit where too much of dust.
- Do not install the EV kit where corrosive gas such as sulphurous acid gas is generated.
- Do not install the EV kit where exposed to rains and direct sunlight.

Decide the installation place with the customers as follows:

- Install EV kit level on strong wall, floor, ceiling which is not subject to vibration.
- Install EV kit where the connection pipe can be easily installed.
- Install EV kit where vibration and noise are not amplified.

SYSTEM DESIGN

- Take servicing, etc. into consideration and leave the space as follows.

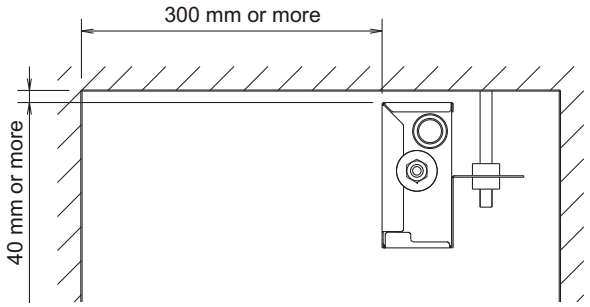

■ Installation

⚠ CAUTION

- The installation direction can be selected either horizontal (pattern A) or vertical (pattern B), but keep the inclination within 5°.
  - Pattern A

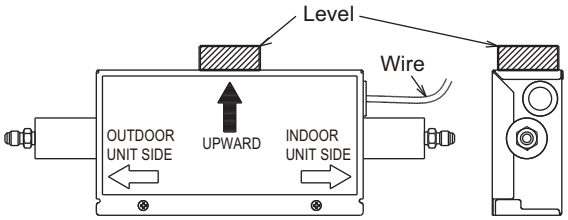

Horizontal installation

  - Pattern B

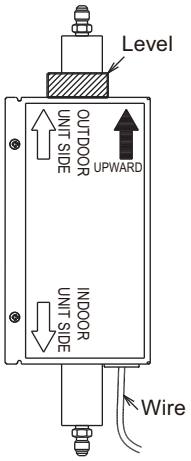

Vertical installation

- Incorrect installation direction or angle may cause improper operation.

- **Suspended installation**
  Remove the 2 screws and replace them with the hanger.
  Use hanger bolts to fasten the hanger.

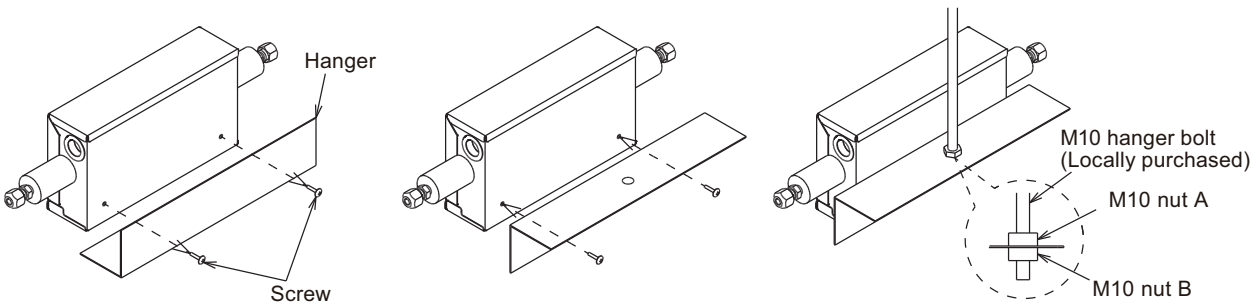

SYSTEM DESIGN

SYSTEM DESIGN

- **Floor installation**
  Use 4 screws (accessory) to fasten the unit to the floor.

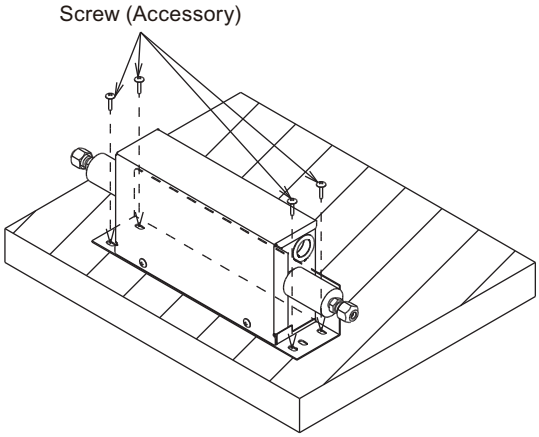

- **Wall installation**
  Remove the 2 screws and replace them with the hanger.
  Use 4 screws (accessory) to fasten the unit to the wall.

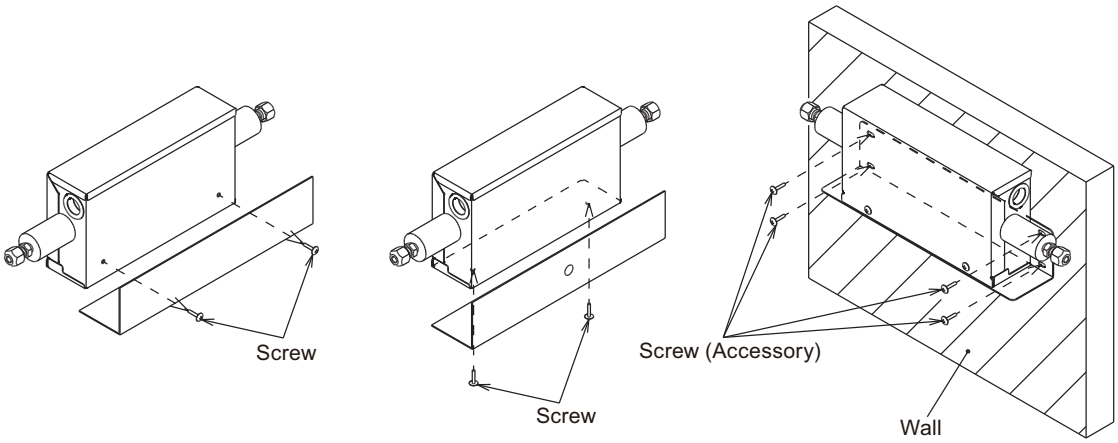

■ Connect the pipes

Connect EV kit to liquid pipe of EEV external models indoor unit.

Pipe size	mm (in)	Indoor unit side	Ø6.35 (1/4)	Flare connection
		Outdoor unit side		

Use a torque wrench to tighten the flare nut.

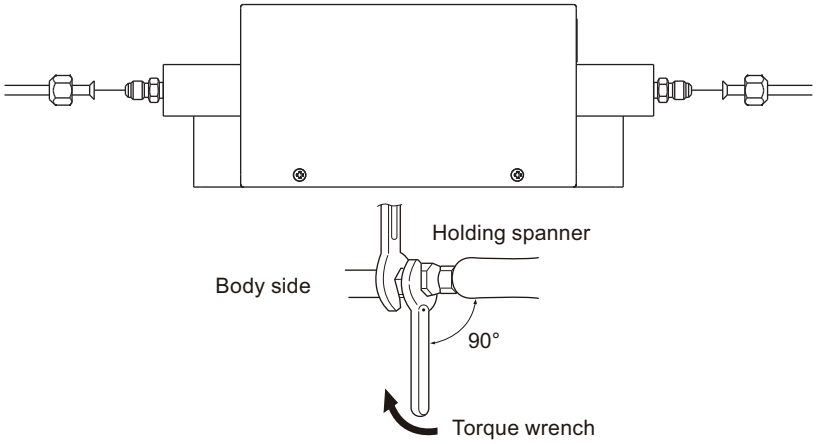

Pipe size	mm (in)	Ø6.35 (1/4)
Tightening torque	N•m	16.0 to 18.0

SYSTEM DESIGN

■ Attach the insulation material

Insulation by the coupler heat insulation around the pipe.

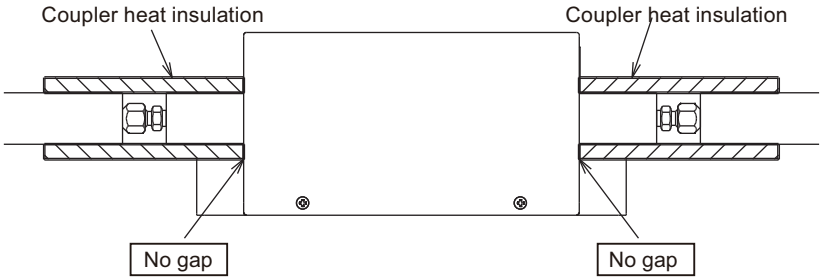

■ Wiring procedure

1. Connect the EV kit wire to the indoor unit.
2. Wrap the tube around the connection, and fasten both ends binders.
3. Connect the ground to the indoor unit.

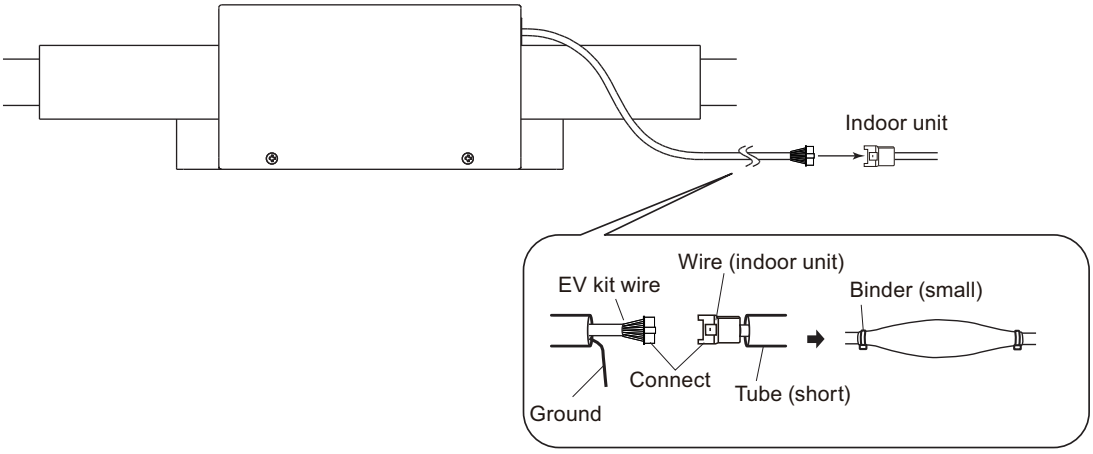

⚠ CAUTION

Never bundle the wire with power supply.

■ Specifications

Model name		UTR-EV09XB	UTR-EV14XB
Dimensions (H × W × D)	mm	121 × 416 × 65	
Weight	g	1,500	
Connection wire length method	m	5	

SYSTEM DESIGN

3-3. Separation tube

Total cooling capacity of indoor unit (kW)	Model name
19.6 or less	UTP-AX054A

■ Installation

Select the connections with the pipe diameter that match the selected pipe sizes from the Separation tube, and cut them with a pipe cutter.

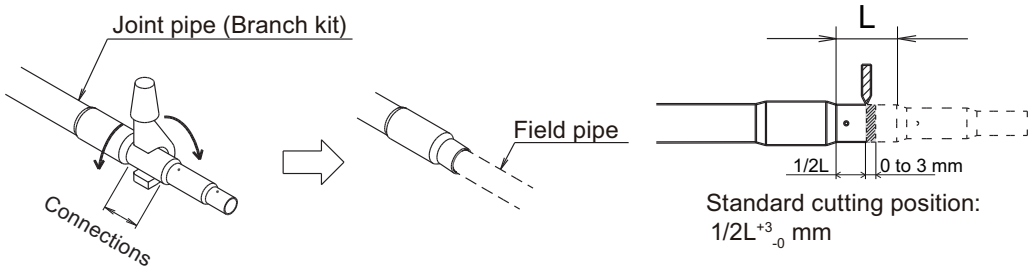

NOTE: Insert the field pipe firmly until it touches the joint pipe (Separation tube).

When the pipe size of the Separation tube itself does not match, or when piping sizes differ ever if it cuts the pipe, use attached reducer or attached expander.

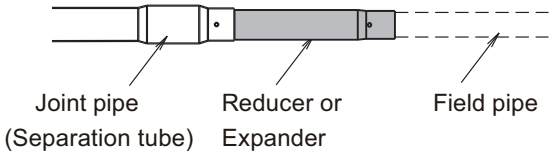

SYSTEM DESIGN

SYSTEM DESIGN

■ Restriction when install

Be sure following restriction.

- **Installation angle**
  Place the Separation tube horizontally or vertically so that the refrigerant separates evenly.

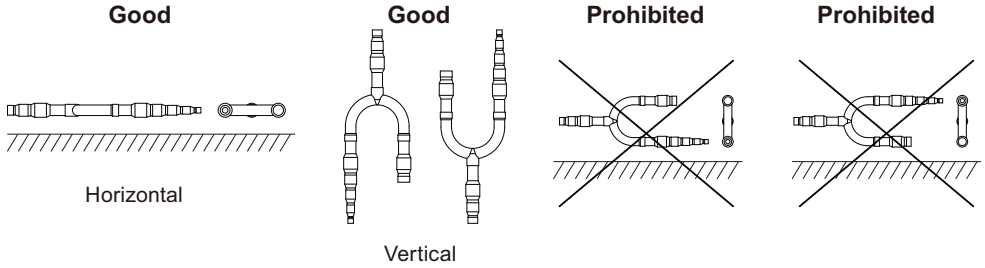

⚠ CAUTION

- If it is placed horizontally, keep it within allowable mounting angle below. Otherwise, it will not separate the refrigerant evenly, causing a reduction in performance.

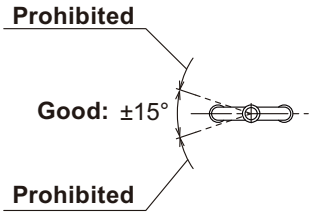

- During piping work, apply nitrogen gas while brazing the pipes. If pipes are brazed without applying nitrogen gas, it will create a large amount of oxidation film, which will cause a critical malfunction.
- To prevent moisture or foreign matter from entering during work, do not leave the piping open.
- Refer to the installation manual supplied with the outdoor unit for airtightness test and evacuation procedures.

SYSTEM DESIGN

- **Straight pipe length**
  A straight pipe (minimum length 0.5 m) before Separation tube is necessary in order to separate the refrigerant exactly.

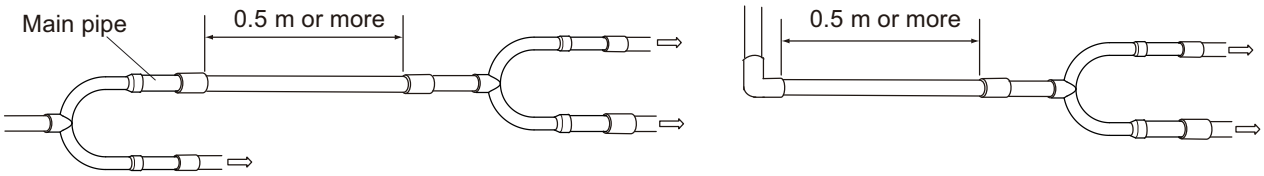

⇨ To indoor unit, separation tube, or header

⚠ CAUTION

- Keep the distance 0.5 m or more for straight part to Separation tube, in order to prevent the outdoor unit malfunction and generation of refrigerant noise.
- **About the connecting curvature of field pipe and Separation tube:**
  The filed pipe should be connected to the Separation tube so that the curved angle on each side is 3 degree or less.

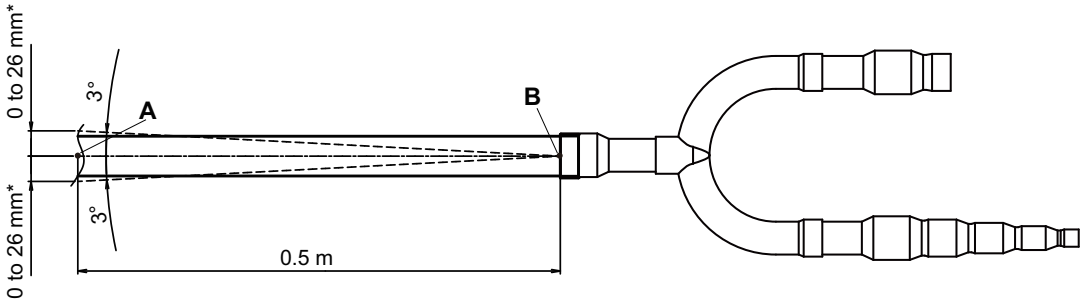

*: Allowed value based on “A” (center of field pipe) at 0.5 m from “B” (junction of the Separation tube).

SYSTEM DESIGN

SYSTEM DESIGN

■ Heat insulation installation

After brazing the pipes and leak check, use the supplied insulation to insulate them. (on liquid and gas pipes)

1. Remove the protective sheet from the double-stick tape that is affixed to the heat insulation.

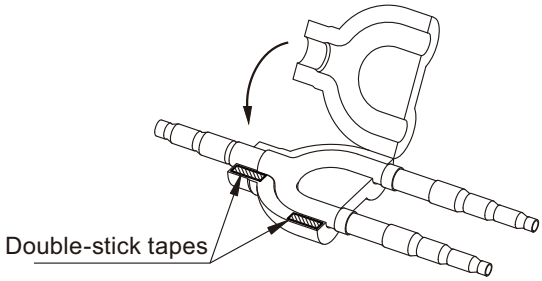

2. Be sure to install the tape (accessory) in each heat insulation to the 2 positions as shown in the following figure.

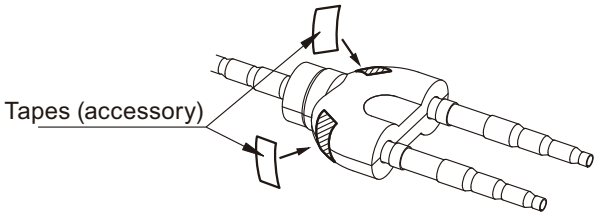

3. Use tape (locally purchased) to seal the seam so that there will be gap at the junction between the aforementioned heat insulation and the heat insulation on the local piping.

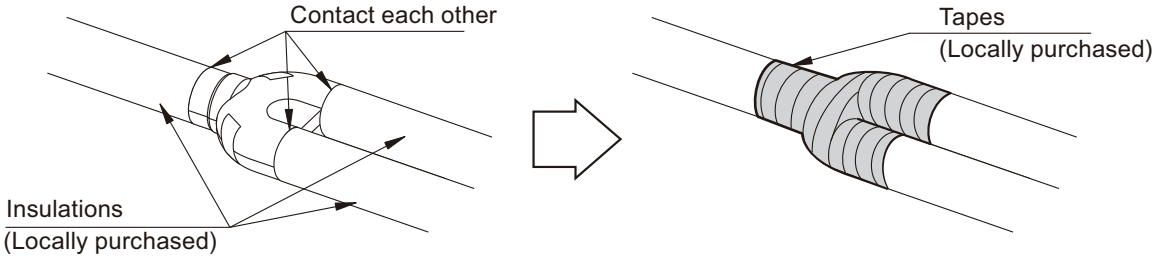

⚠ CAUTION

- Insulate the liquid and gas pipe completely. If not, it may cause the water condensation or performance reduction.
- Wrap the heat insulation with tape or pipe cover in order to extend the life time of heat insulation.
- Take proper measurement to strengthen by using another heat insulation at the following installation environment.
  - Environment temperature ≥ 35 °C and humidity 85%
  - Environment temperature ≥ 25 °C and humidity 90%

Installation example

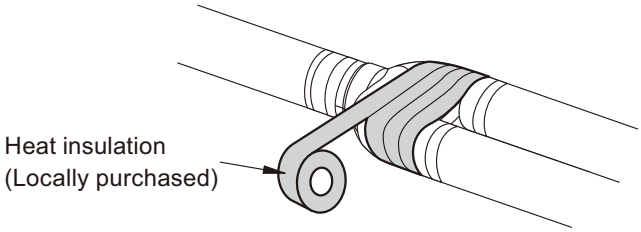

SYSTEM DESIGN

3-4. Header

Total cooling capacity of indoor units (kW)	3 to 6 Branches	3 to 8 Branches
28.0 or less	UTR-H0906L	UTR-H0908L

NOTE: When separate into 2 branches, use a Separation tube instead.

■ Installation

1. Connecting the connection pipes from the indoor units.

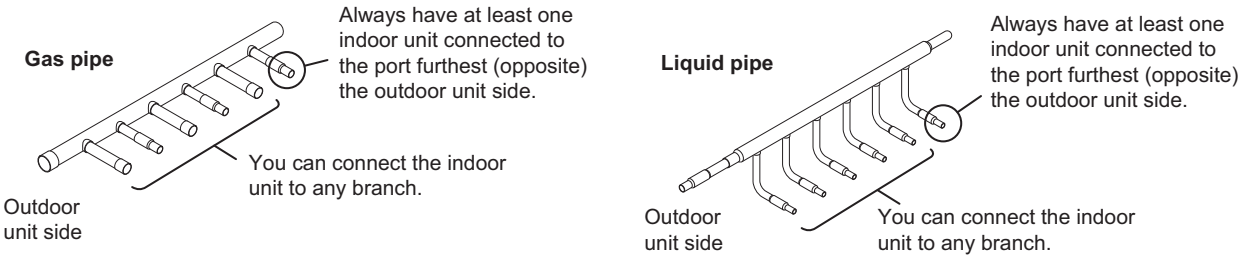

2. Use a pipe cutter to cut at the location that matches the piping size or use expanders as necessary.

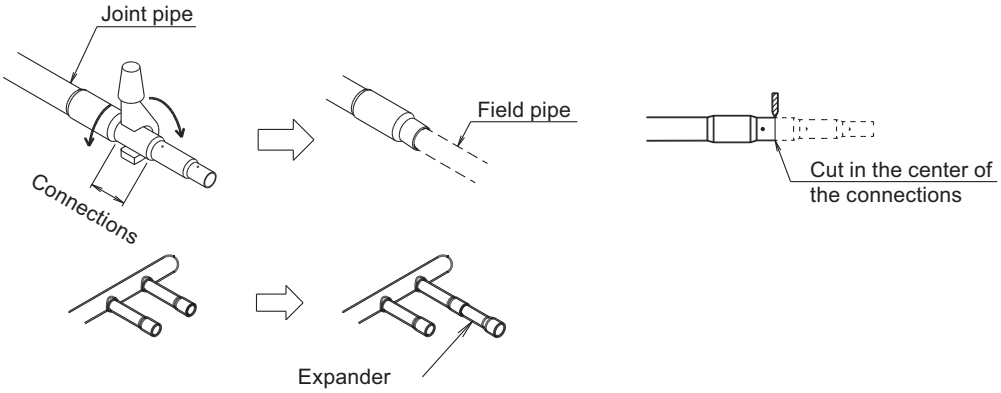

3. Attach a plugging pipe provided if there is no piping connected at the Headers.

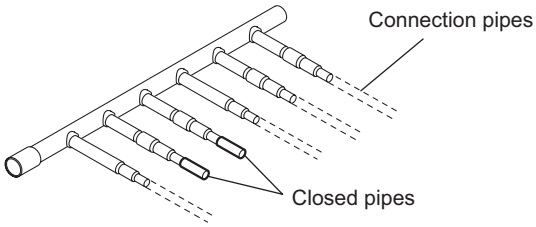

4. Connecting pipe locally purchased from outdoor unit, cut the pipe end to connect the pipe and close the opposite end.

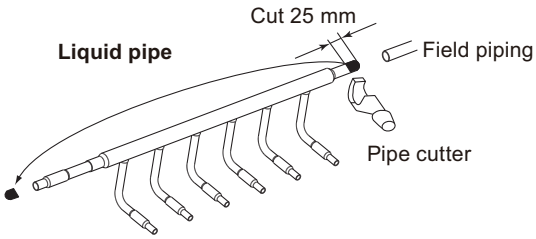

5. Use Header support as necessary.

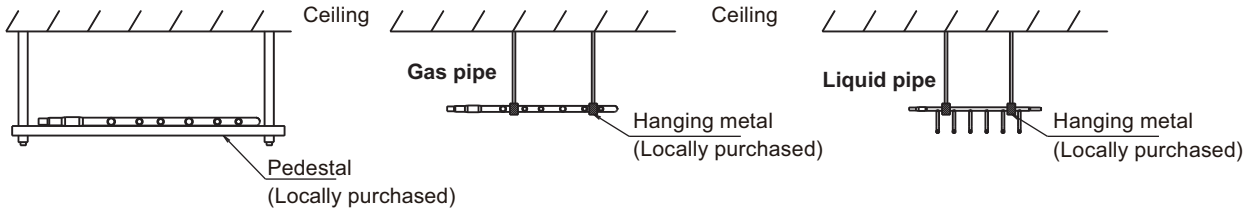

SYSTEM DESIGN

SYSTEM DESIGN

⚠ CAUTION

Separation tube is not allowed to install Header kit.

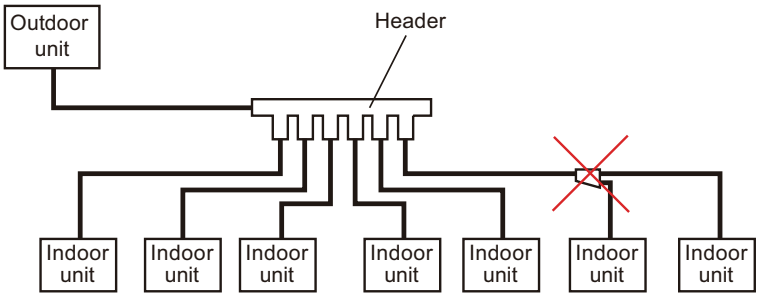

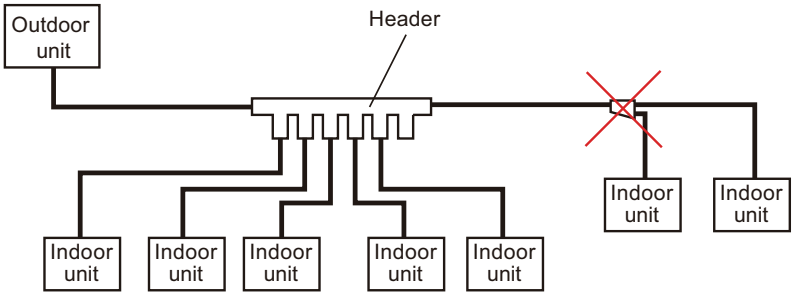

SYSTEM DESIGN

■ Restriction when install

Be sure following restriction.

- **Installation angle**
  Install the Header so that it branches horizontally.

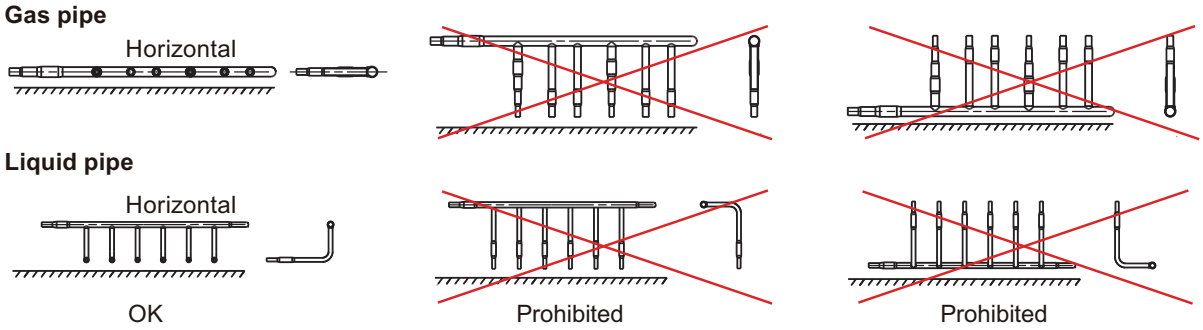

Use a level to make sure that the Header is positioned as shown in following figure, and then sure it in place.

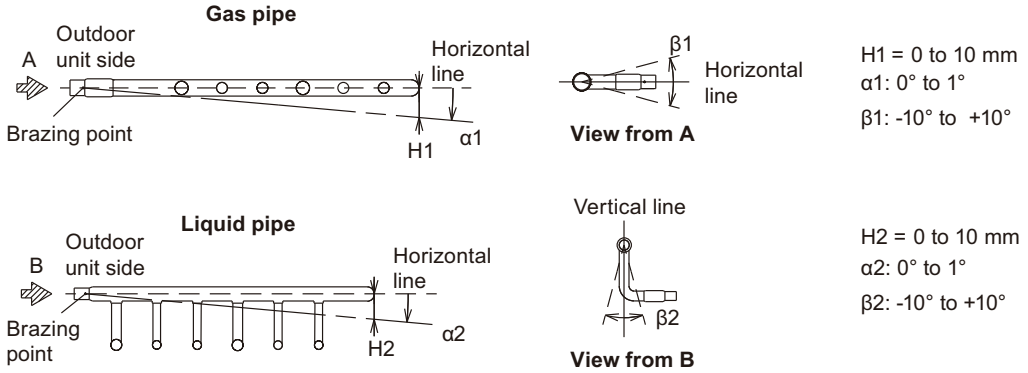

- **Straight pipe length**
  A straight pipe (minimum length 0.5 m) before Header is necessary in order to separate the refrigerant exactly.

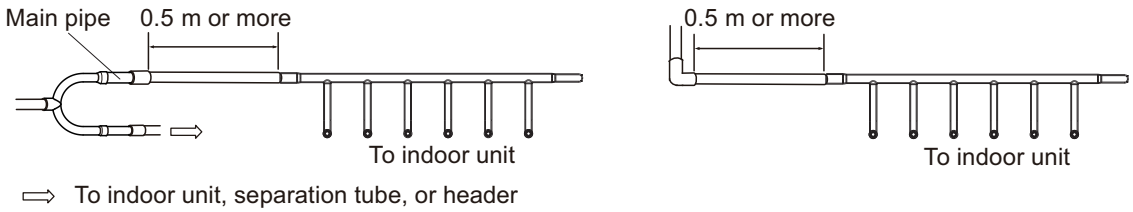

■ Heat insulation installation

After brazing the piping, attach heat insulation.

1. Remove the protective paper for the tape on the heat insulation for the header and attach it. Tighten by using binders at five locations.

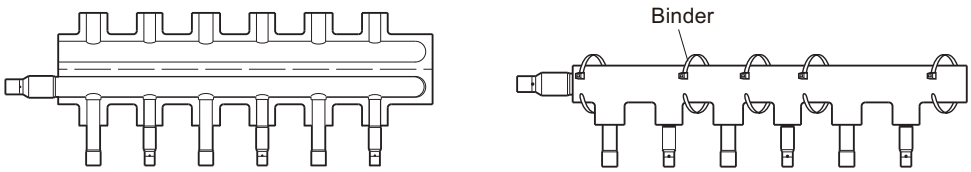

2. Cover the plugging pipe with heat insulation and seal with tape.

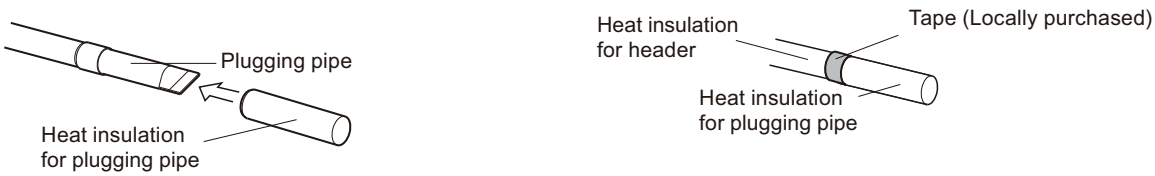

SYSTEM DESIGN

4. Wiring design

4-1. Electrical wiring

■ Precaution

Regulations for wire diameter and selecting circuit breaker size differ from locality.
Always install in accordance with local standard.

⚠ WARNING

- Do not turn on the power until all installation work is complete.
- Before starting work, check the power is not being supplied to the unit.
- Connect the connection cable firmly to the terminal board. Imperfect installation may cause fire.
- Always install a circuit breaker for each power supply circuit. Failure to use a circuit breaker could result in electrical shock or fire.
- Always install a disconnect switch for each power supply circuit.
- Always connect the ground wire.
- Always fasten the outside covering of the connection cable with the cord clamp. (If the insulator is chafed, electric leakage may occur.)
- Never install a condenser for improve the power factor. (It will not improve the power factor and the condenser will become abnormally hot.)
- When installing this system in high humidity locations, install using Ground Fault Equipment Breaker (GFEB) to reduce the risk of leaking current which may result in electric shock or potential fire.

SYSTEM DESIGN

■ Wiring system outline

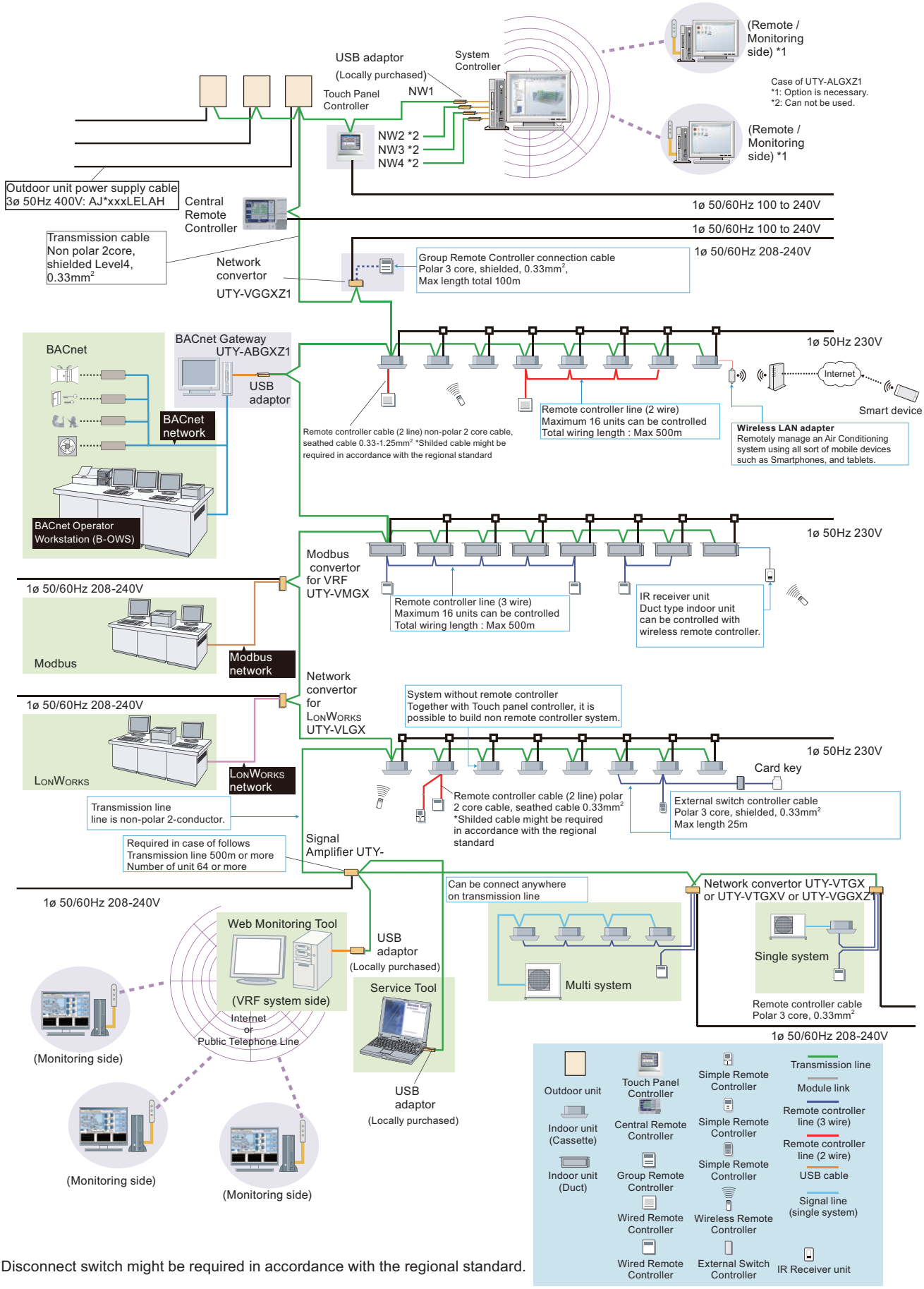

Disconnect switch might be required in accordance with the regional standard.

SYSTEM DESIGN

SYSTEM DESIGN

4-2. Power supply cable

RELATED LINKS

"Electrical characteristics" in Chapter 3. OUTDOOR UNITS on page 03-17
"Electrical characteristics" in Chapter 4. INDOOR UNITS on page 04-34

■ Specifications

Use a separate power supply for the outdoor unit and indoor unit.

● Outdoor unit

Model	Recommended cable size (mm^2)		Fuse capacity (A)	Breaker for leakage current	Remarks
	Power cable	Earth cable			
AJ∗040LCLDH	6	4	32	30 mA, 0.1 sec or less	230 V ~ 50 Hz 2 wire + ground
AJ∗045LCLDH	6	4	32		
AJ∗054LCLDH	6	4	32		

- Select wire size based on the value of MCA (Minimum Circuit Ampacity) and TOCA (Total Value of Each Over Current Set). For wiring specifications of outdoor units, refer to "Electrical characteristics" in Chapter 3. OUTDOOR UNITS on page 03-17.
- Select circuit breaker for outdoor unit based on the value of MCA in "Electrical characteristics" in Chapter 3. OUTDOOR UNITS on page 03-17. The breaker should not operate when stating current is generated.

● Indoor unit

Model	Recommended cable size (mm^2)	Fuse capacity (A)	Breaker for leakage current	Remarks
All models	2.5	20	Refer to Table B	230 V ~ 50 Hz 2 wire + ground

Refer to the table for the breaker specifications of each installation condition.

Perform the power crossover wiring within the range of the same refrigerant system. When the power crossover wiring is done, make a connection for indoor units to satisfy conditions of Table A and B below.

- Select cable size based on the value of total MCA of the indoor units connected, and if necessary divide the system so that the total MCA of the indoor units connected is smaller than 15 A. The indoor unit shall be connected up within refrigerant system.
- In order to influence of a breaker stop, divide the power supply circuit for every refrigerant system.
- Attach at least one breaker per refrigerant system.
- Design the power supply circuit to keep the voltage drop within 2%.

SYSTEM DESIGN

- **Table A. Current breaker requirements**

Model	MCA (A)	Fuse capacity (A)
All models	Refer to "Electrical characteristics" in Chapter 4. INDOOR UNITS on page 04-34	20

When the power crossover wiring is done, make it so that the total of the MCA of the connected indoor units does not exceed the 15 A.

If the capacity of connected indoor units exceed the upper limit, either add breakers or use a breaker with a greater capacity.

- **Table B. Earth leakage breaker requirements**

Breaker capacity
30 mA, 0.1 sec or less

NOTE: For maximum connectable indoor unit, refer to "Refrigerant system" on page 06-1.

⚠ CAUTION

- Obtain the distribution network operator's agreement about the power capacity of the power supply system, specification of the cable and the harmonic current, etc. when you connect the outdoor unit with the power supply.
- This product is intended for professional use. Be sure to use a dedicated power circuit. Never use a power supply shared by another appliance.
- Above Wire size and Fuse capacity are an example.
- Regulation of wire size and circuit breaker differs from each locality, refer in accordance with the regional standard.
- Specific wiring requirement should be applied Type 60245 IEC66 or equivalent.
- To prevent the electrical noise malfunction and hazards from insulation failure, the unit should be connected to ground.
- A disconnect switch may required for ease of maintenance in accordance with the regional standard for each unit. Check the regional standard. Make the wire length between disconnect switch and unit terminal as short as possible.
- When connecting the indoor unit power supply from part of a 3-phase power source, taking the power from each phase uniformly is recommended to prevent unbalance.
- All field wiring and components must be provided by a licensed electrician.
- Use copper conductors only.

SYSTEM DESIGN

■ Wiring example

⚠ CAUTION

- Except for emergency, never turn off main as well as sub breaker of the indoor units during operation. It will cause compressor failures as well as water leakage.
- First, stop the indoor unit by operating the control unit, converter, or external input device, and then cut the breaker.
- Make sure to operate through the control unit, converter, or external input device.
- When the breaker is designed, locate it at a place where the users cannot start and stop in the daily work.
- Regulation of wire size and circuit breaker differs from each locality, refer in accordance with the regional standard.

- Example 1: Using terminal board for indoor unit

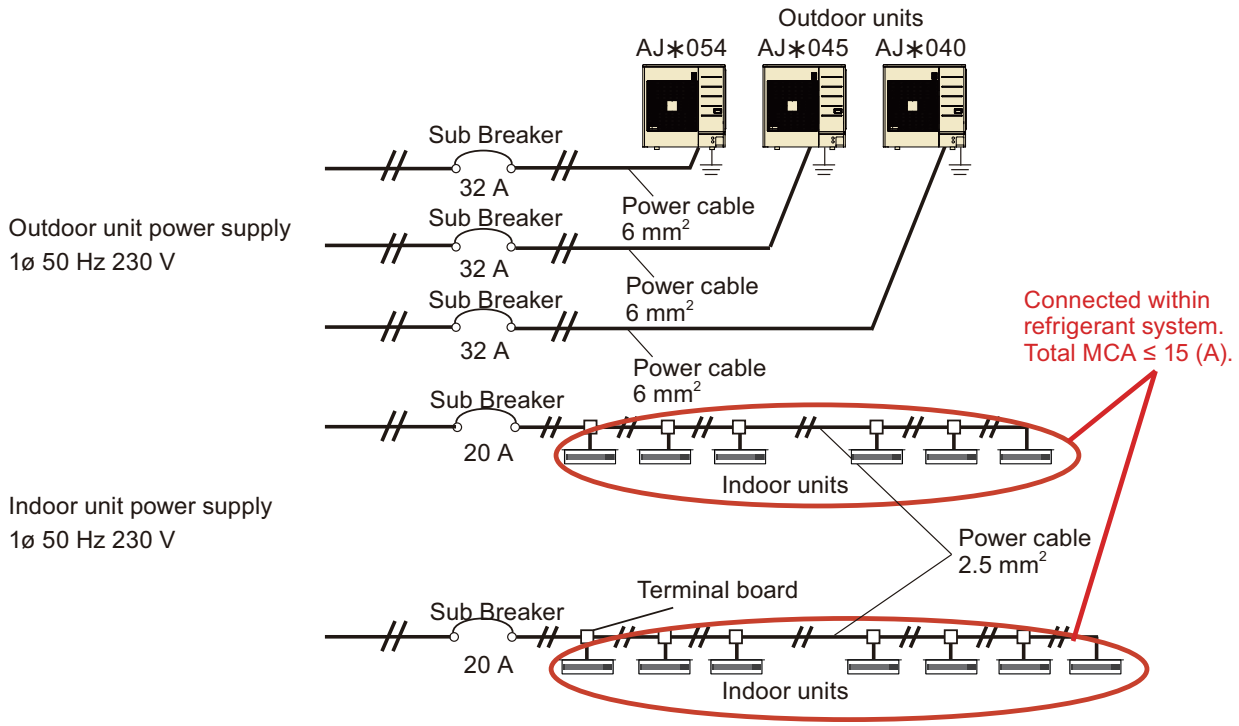

Total Sub Breaker ≤ Main Breaker

SYSTEM DESIGN

SYSTEM DESIGN

- Example 2: Using external power supply unit
  When operating multiple indoor units with one remote controller, make sure that AC 230 V power is supplied with one breaker as shown below.

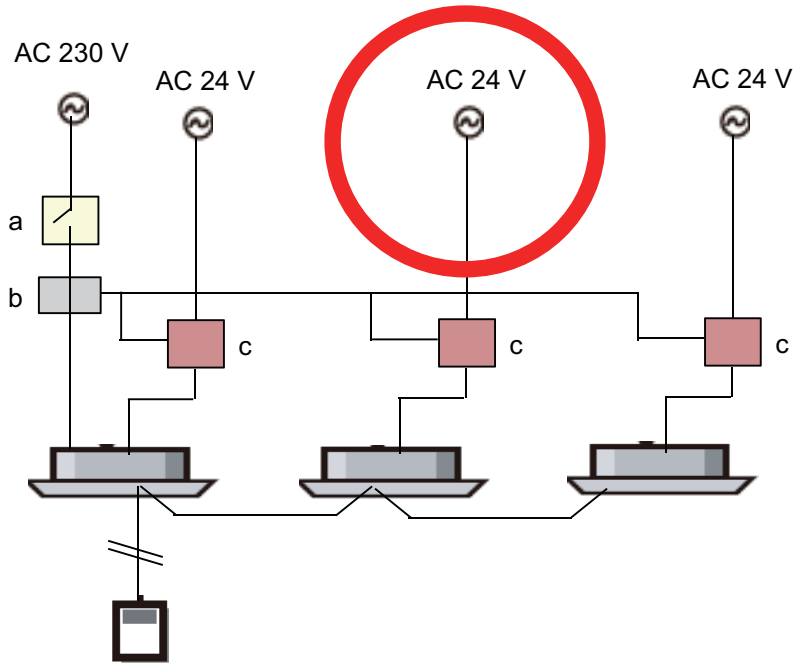

a: Circuit breaker
b: Relay
c: External power supply unit

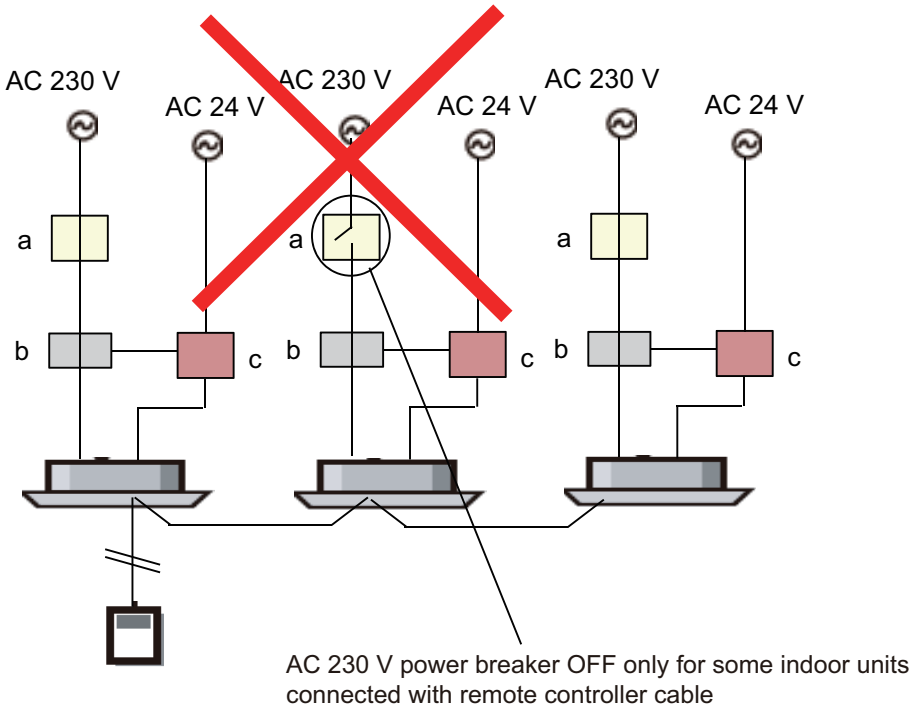

SYSTEM DESIGN

4-3. Transmission cable

RELATED LINKS

"Definition" on page 06-7

■ Wiring specifications

Use	Cable size	Cable type	Remarks
Transmission cable	0.33 mm^2 (22 AWG)	LEVEL4 (NEMA) non polar 2-core, twisted pair solid core, diameter 0.65 mm	LonWorks compatible cable

Use shielded cable specified below and always ground it both end.

22 AWG (0.65 mm) LEVEL4 cable with shielded (National Electrical Manufacturers Association [NEMA]) differs from the Category 4 specification proposed by the Electronic Industries Association/ Telecommunication Industry Association (EIA/TIA).

Reference specifications for transmission cable			
Item		**Unit**	**Specifications**
Wire type		mm	0.65 dia (22 AWG) Twisted pair with shield
Pair (Twisted pair cable)*1		—	1 pair or 2 pair
Loop DC resistance (20 °C)		Ohm/km	Less than 118
DC resistance unbalancing (20 °C)		%	Less than 5
Dielectric voltage (Between conductor and conductor)		V/min	AC 350
Insulation resistance (20 °C) (Between conductor and conductor)		Mohm-km	More than 500 (After charging DC 500 V 1 min)
Static capacitance between conductors	1 KHz	nF/km	Less than 56
Unbalanced static capacitance (To ground)	1 KHz	nF/km	Less than 3.28
Characteristic impedance	772 KHz	Ohm	102 ±15% (87 to 117)
	1 MHz		100 ±15% (85 to 115)
	4 MHz		
	8 MHz		
	10 MHz		
	16 MHz		
	20 MHz		
Attenuation	772 KHz	dB/km	Less than 15
	1 MHz		Less than 18
	4 MHz		Less than 36
	8 MHz		Less than 49
	10 MHz		Less than 56
	16 MHz		Less than 72
	20 MHz		Less than 79
Cross talk attenuation*2	772 KHz	dB/km	Less than 58
	1 MHz		Less than 56
	4 MHz		Less than 47
	8 MHz		Less than 42
	10 MHz		Less than 41
	16 MHz		Less than 38
	20 MHz		Less than 36

SYSTEM DESIGN

SYSTEM DESIGN

Reference specifications for transmission cable		
Item	**Unit**	**Specifications**

NOTES:

- *1: Number of twist is not specified. However, it shall satisfy the electrical specifications such as characteristic impedance, attenuation, etc. (Example: More than 40 times/m)
- *2: Cross talk attenuation is applied when the twisted cable has 2 pairs (2 P).
- Material is not specified. However, it shall be selected by considering the operating environment (temperature, humidity) and the local regulation by the environment condition (ROHS directive, etc.).
- Mechanical specification is not specified. However, it shall be selected by considering the operating environment.
- Never bundle transmission cable with power supply cable.

■ Wiring rules

- In the following cases, Signal amplifier is required.
  - When the total length of the transmission cable exceeded 500 m
    AB + BC + BD + DE + EF > 500 m (Fig. 1)
  - When total number of the units is over 64.
    - When the total length of the transmission cable exceeded 500 m
- Transmission cable length between each unit: 400 m
- Total transmission cable length: 3,600 m (Fig. 2)

Fig. 1

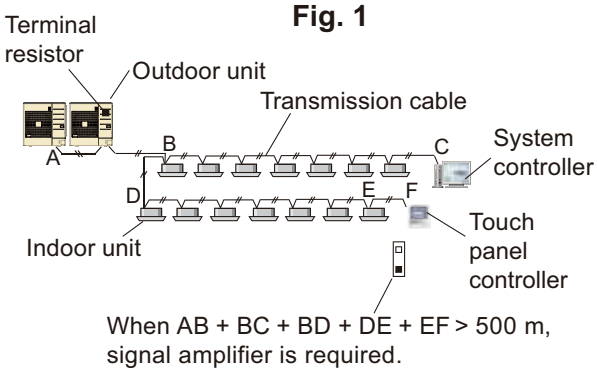

Fig. 2

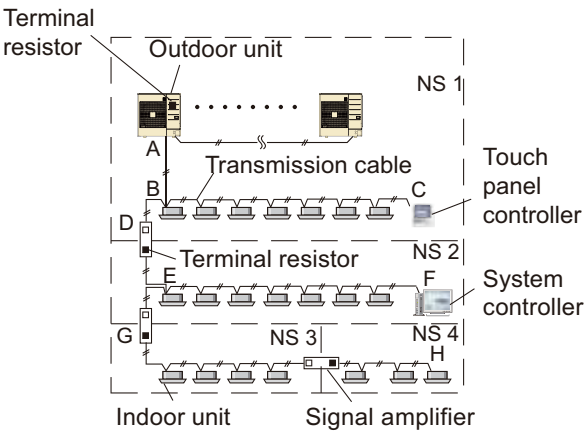

NOTE: For details of maximum wiring length, refer to "VRF network system" on page 06-7.

■ Wiring flow

1. Decide to use feature of automatic address setting depending on system design.
   Decide to use automatic address setting or manual address setting.
   - Automatic address setting: Go to "Auto address setting" on page 06-60 in step 2.
   - Manual address setting: Go to "Manual address setting" on page 06-61 in step 2.

2. Confirm transmission wiring.
   - Auto address setting
     Connect the transmission cable like as Fig. 1 and Fig. 2

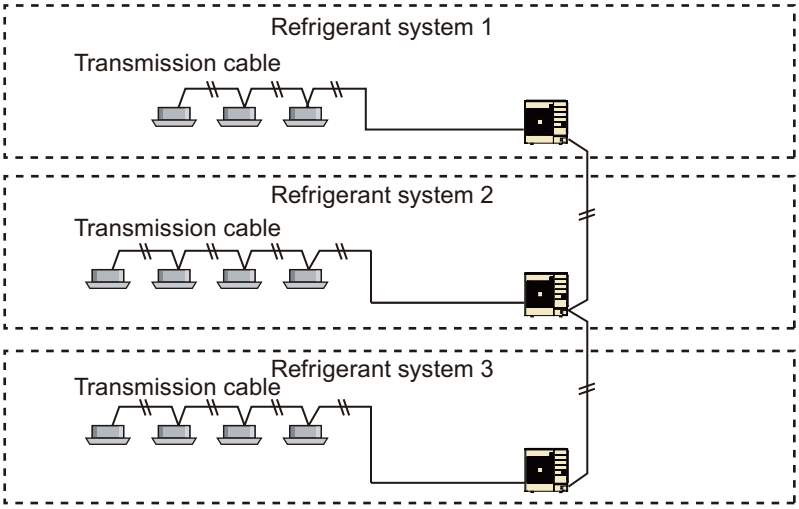

Fig. 1

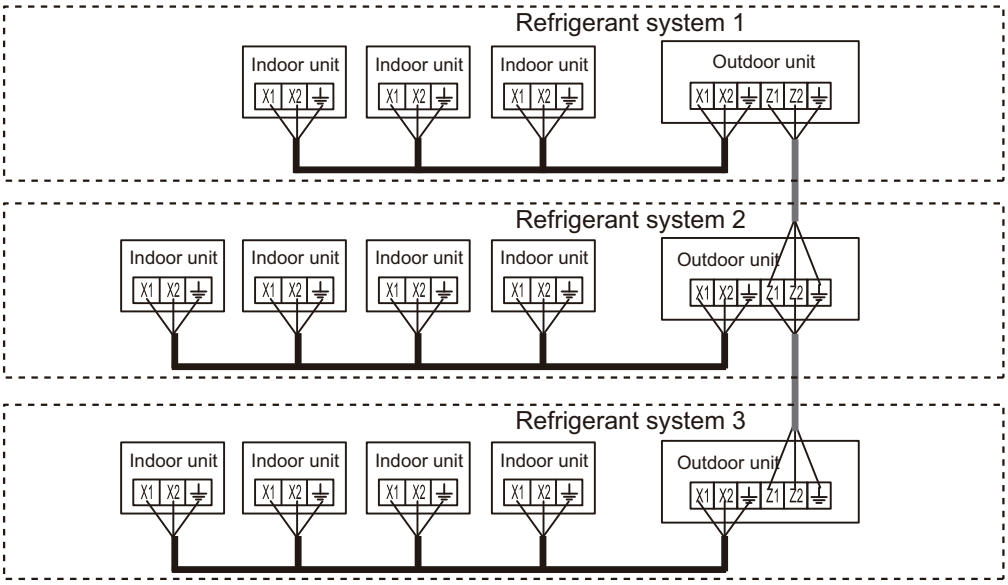

Fig. 2

– X1, X2: Indoor units to outdoor unit
– Z1, Z2: Connection for different refrigerant circuit of outdoor unit

SYSTEM DESIGN

SYSTEM DESIGN

- Manual address setting
  Connect the transmission cable like as Fig. 3 and Fig. 4

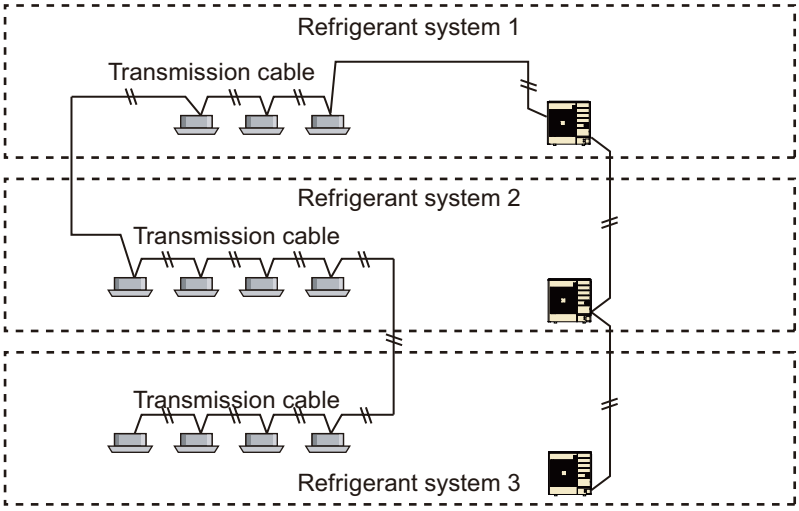

Fig. 3

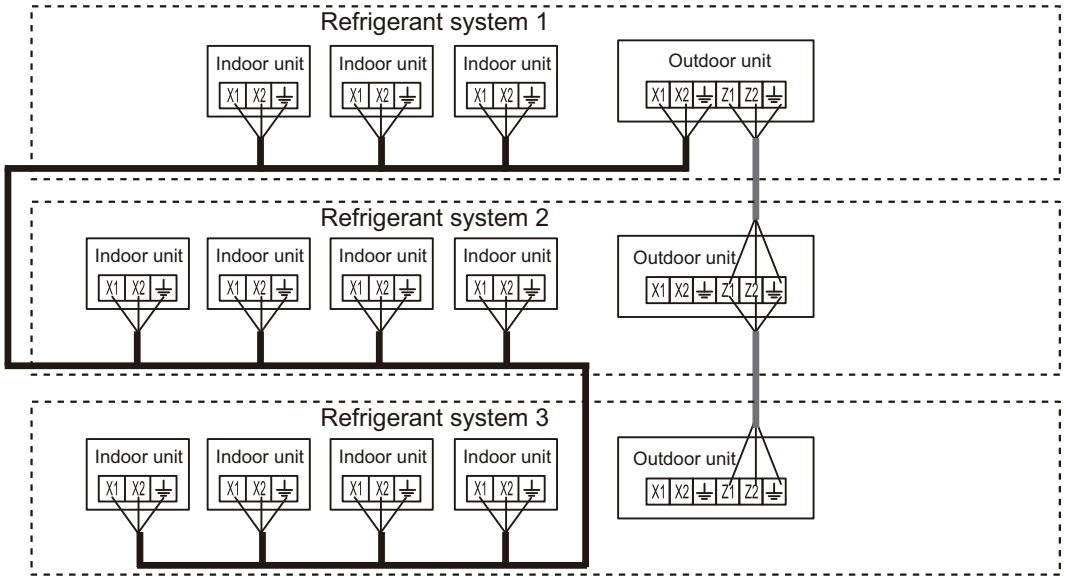

Fig. 4

  – X1, X2: Indoor units to outdoor unit
  – Z1, Z2: Connection for different refrigerant circuit of outdoor unit

3. Confirm the transmission wiring rule.
   For details of wiring rules, refer to "Wiring rules" on page 06-59.

4. Confirm how to install Signal amplifier.
   For details of wiring rules, refer to "Wiring rules" on page 06-59.

5. Confirm how to wire transmission cable.
   Confirm how to connect transmission cable between indoor units.
   - Arrange so that there is one terminal resistor for each network segment.
   - Always take a ground from both ends of transmission cable.

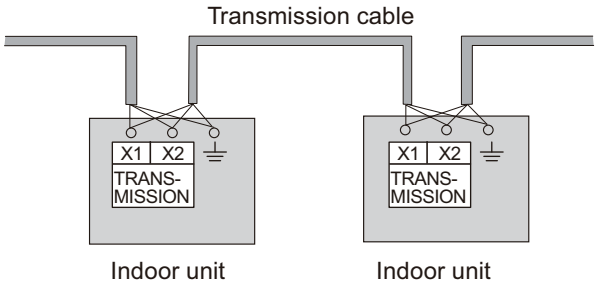

SYSTEM DESIGN

6. Confirm transmission wiring system.
   Confirm your transmission wiring system if transmission wiring system is ensured wiring rule.

   Check list

   - □ Total transmission wiring length
   - □ Total number of unit

NOTE: For details, refer to "VRF network system" on page 06-7.

■ Wiring method

Practical transmission wiring method is shown below.
Each terminal has to be connected the following rules.

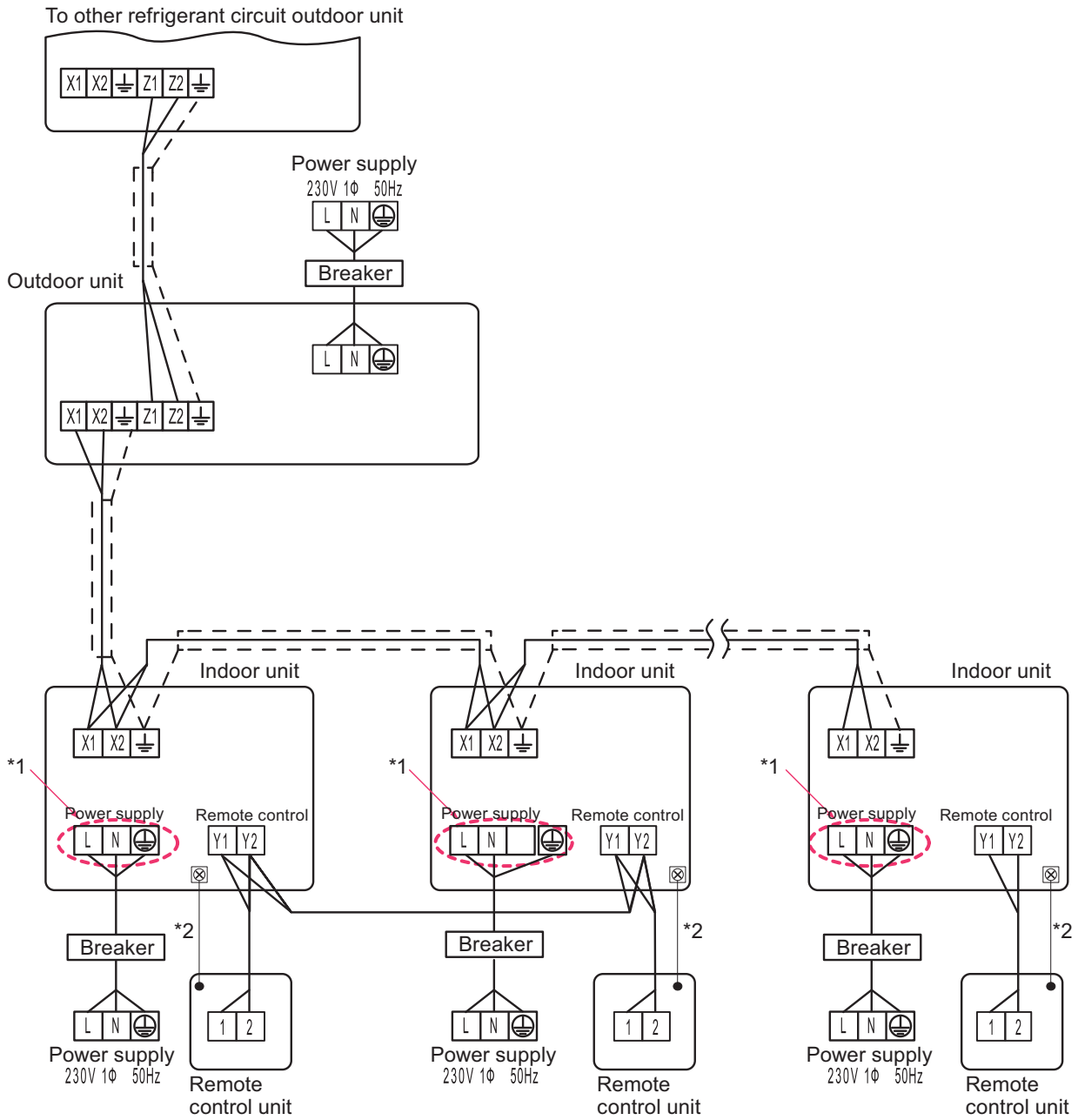

- X1, X2: Indoor units to outdoor unit
- Z1, Z2: Connection for different refrigerant circuit of outdoor unit
- *1: The number of power supply terminal is different depending on the indoor unit model.
- *2: Ground the remote controller if it has a ground wire.

Example:

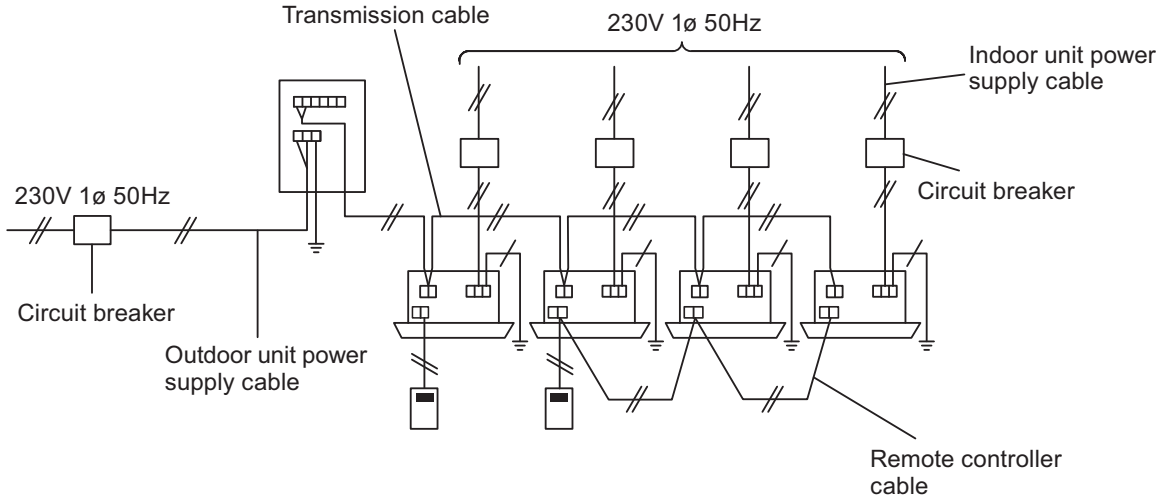

SYSTEM DESIGN

■ Separation rules

- The transmission cable between indoor units, outdoor unit, and controllers can be connected by one cable.
- Terminal board available on the market or the ones inside the indoor unit or outdoor unit should be used for transmission cable separation.
- Connection of 3 or more lines may cause poor communication for one terminal. In this case, use a terminal box.

NOTE: Do not loop.

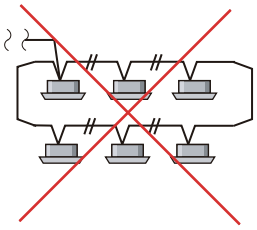

- Example 1: Connecting each outdoor unit and indoor unit with one wiring

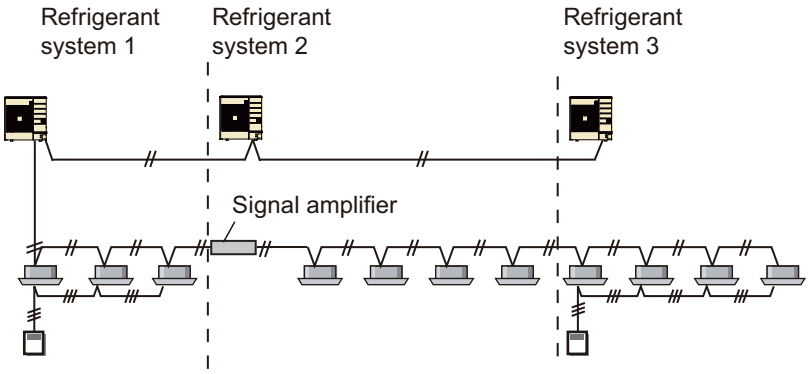

- Example 2: Separating transmission cable

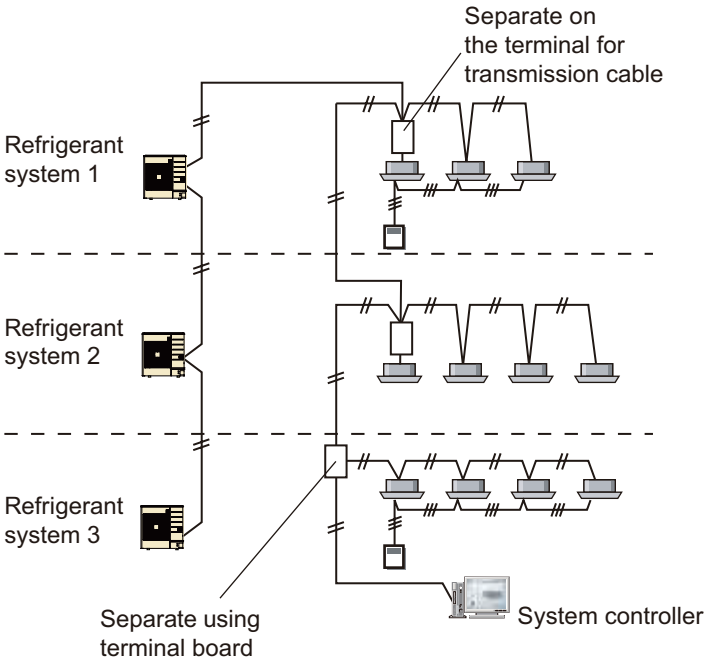

SYSTEM DESIGN

- Example 3: Separation wiring from one terminal board radially

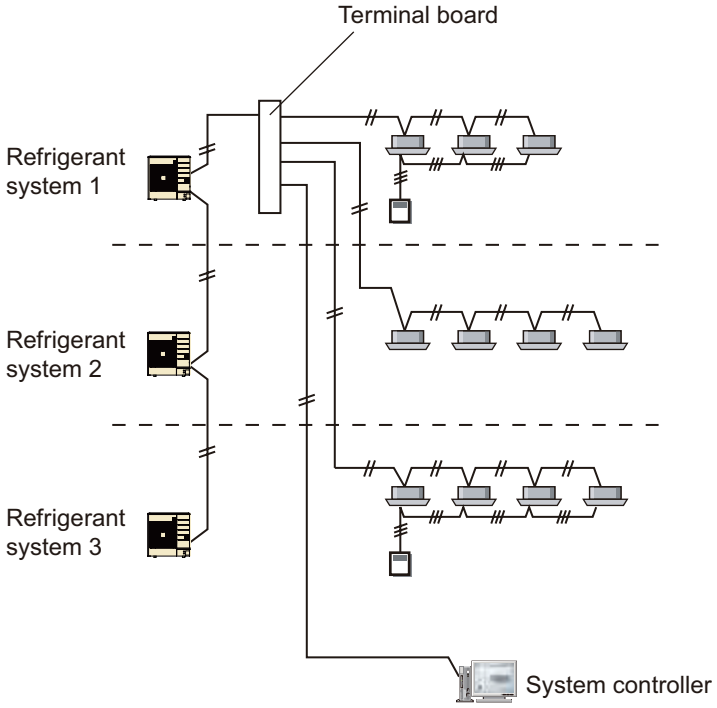

- Example 4: Combination of example 2 and 3

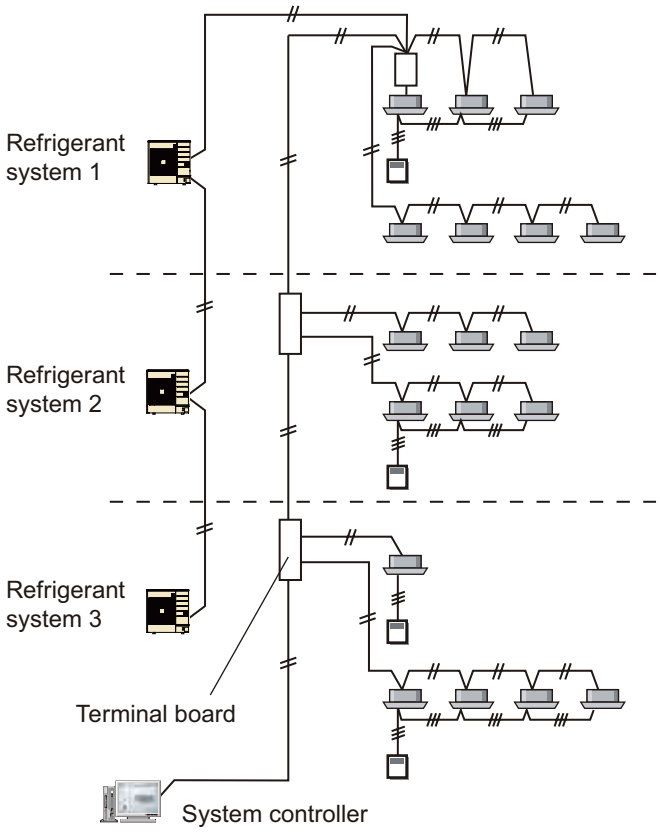

SYSTEM DESIGN

4-4. Controller cable

RELATED LINKS

"Indoor unit type and applicable control method" in Chapter 5. CONTROL SYSTEM on page 05-8
"Control device design limitation" in Chapter 5. CONTROL SYSTEM on page 05-13
"Applicable parts" in Chapter 10. OPTIONAL PARTS on page 10-17

■ Wiring specifications

Model type	Connection to	Wire	Size	Specification
System controller	USB adapter	USB cable	—	
System controller lite				
Touch panel controller	Transmission cable	Refer to "Wiring specifications" on page 06-58		
Central remote controller				
Group remote controller	Network converter	Remote controller cable	0.33 mm^2	Shielded, polar 3 core
Wired remote controller (2-wire type)*1	Indoor unit	Remote controller cable	0.33 to 1.25 mm^2	Sheathed, non-polar 2 core, twisted pair*2
Simple remote controller (2-wire type)*1	Indoor unit	Remote controller cable	0.33 to 1.25 mm^2	Sheathed, non-polar 2 core, twisted pair*2
Wired remote controller (3-wire type)	Indoor unit	Remote controller cable	0.33 mm^2	Sheathed PVC cable, polar 3 core*2
Simple remote controller (3-wire type)				
External switch controller	Indoor unit	Remote controller cable	0.33 mm^2	Shielded, polar 3 core
	External input		0.33 mm^2	Shielded, non-polar 2 core, twisted pair
IR receiver unit (for All duct type)	Indoor unit	Connection cable	—	5 m cable attached
IR receiver unit (for Circular flow cassette type)				
IR receiver unit (for 3D flow cassette type)				
Human sensor kit (for Circular flow cassette type)				
Remote sensor unit				10 m cable attached
EV kit				5 m cable attached
Drain pump unit				

*1: For maximum connectable number, refer to "Maximum connectable number of remote controller (2-wire type)" on page 06-67.
*2: Use shielded cable (locally purchased) in accordance with the regional cable standard.

⚠ CAUTION

- Install in accordance with the regional standard.
- Never bundle the power supply cable and controller cable together. Bundling these cords together will cause misoperation.
- Always ground for shielded cable both end.
- For details of specification and connection, refer to "Control system" in Chapter 5. CONTROL SYSTEM on page 05-1.
- Controller might be required to connect power supply cable and transmission cable. For power supply cable, use separate connection with other units.

SYSTEM DESIGN

■ Maximum connectable number of remote controller (2-wire type)

Maximum connectable number of remote controller (2-wire type) is limited by cable size and maximum cable length.

Maximum connectable number of remote controller (2-wire type)				
Cable size (S)		Total cable length (L)		
AWG	mm^2	L ≤ 100 m	100 m ≤ L ≤ 250 m	250 m ≤ L ≤ 500 m
16	1.25	4	4	4
18	0.75 (1.25 > S ≥ 0.75)	4	4	2
20	0.5 (0.75 > S ≥ 0.5)	4	2	2
22	0.3 (0.5 > S ≥ 0.3)	4	1	1

■ Wiring example

- **Example 1**
  Individual indoor units can be connected as one remote controller group. (Max. 8 units)
  - **Example 1-1**

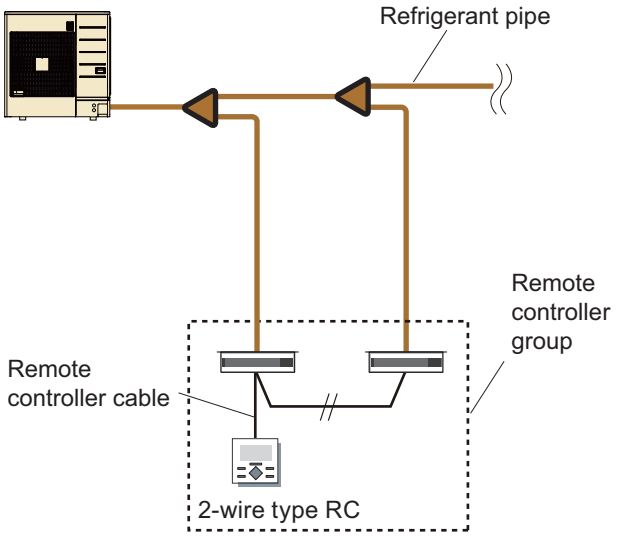

  - **Example 1-2**

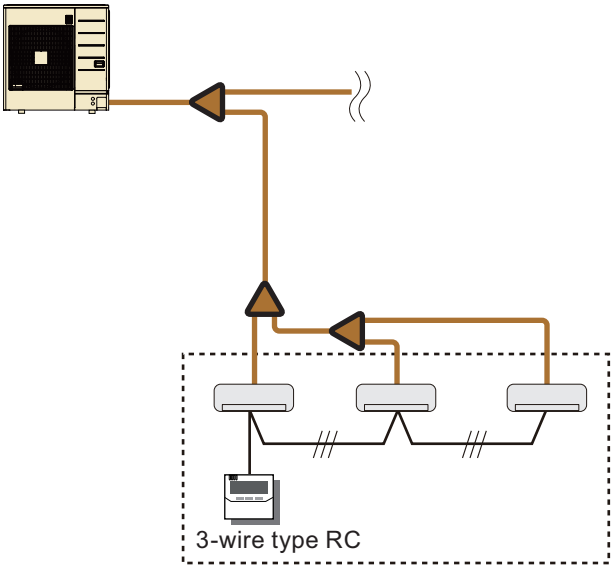

SYSTEM DESIGN

SYSTEM DESIGN

- **Example 2 (Prohibited)**
  Cross-over wiring of refrigerant system in the same remote controller group is prohibited.

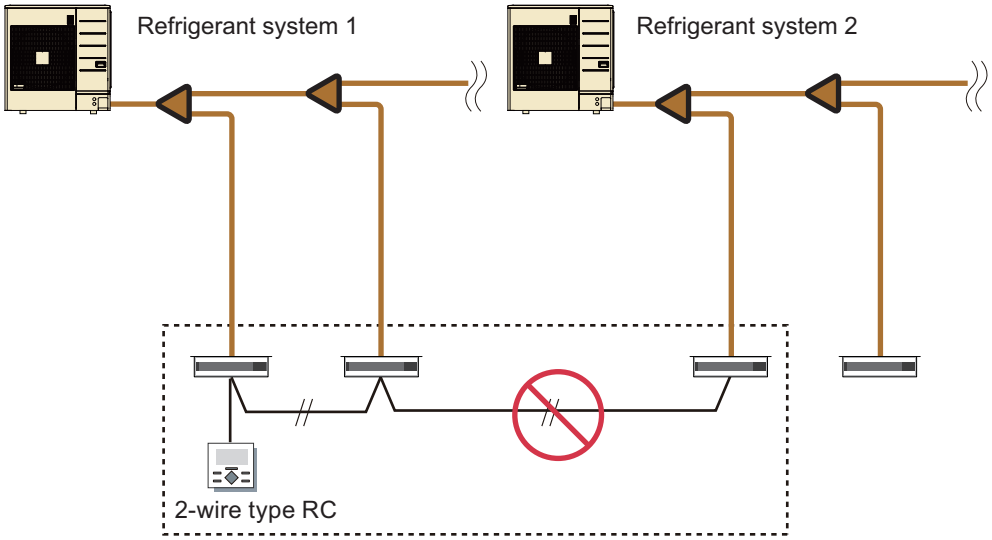

- **Example 3**
  3-wire type and 2-wire type wired remote controller can coexist in the same refrigerant system.

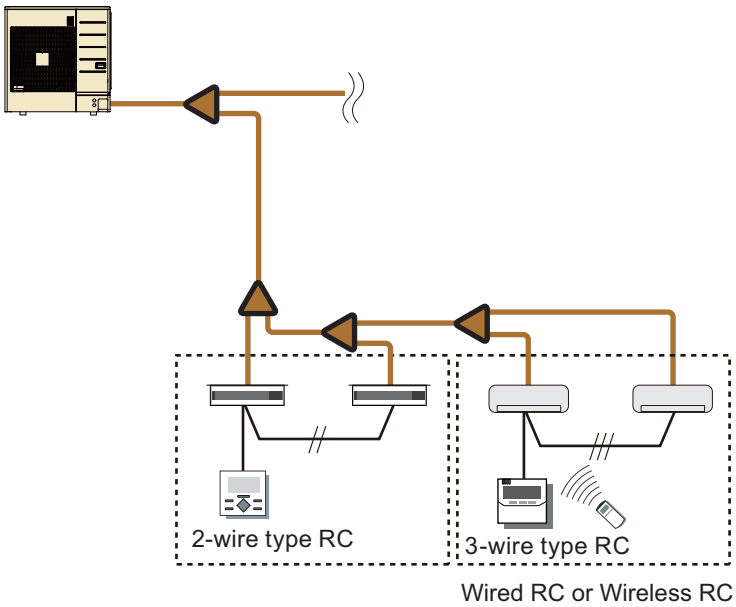

- **Example 4 (Prohibited)**
  Connecting 3-wire type and 2-wire type wired remote controller in the same remote controller group is prohibited.

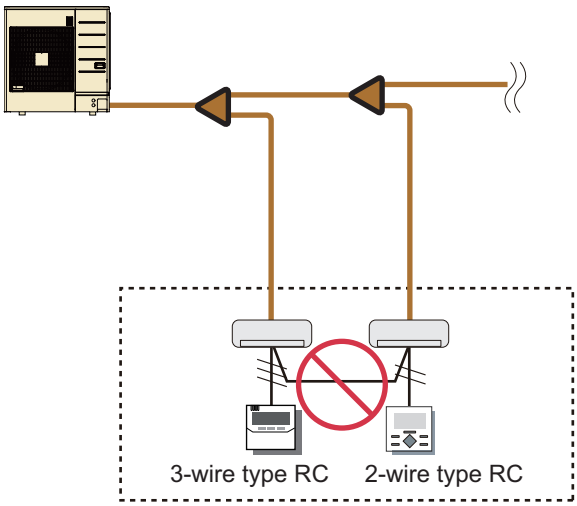

SYSTEM DESIGN

5. Drain connection

5-1. Outdoor unit

⚠ CAUTION

- Perform drain work in accordance with this manual, and ensure that the drain water is properly drained. If the drain work is not carried out correctly, water may drip down from the unit, wetting the furniture.
- When the outdoor temperature is 0 °C or less, do not use the accessory drain pipe and drain cap. If the drain pipe and drain cap are used, the drain water in the pipe may freeze in extremely cold weather.

- As the drain water flows out of the outdoor unit during heating operation, install the drain pipe and correct it to a commercial 16 mm hose.
- When installing a drain pipe, plug all the holes other than the drain pipe mounting hole in the bottom of outdoor unit with drain cap so there is no water leakage.

Unit: mm

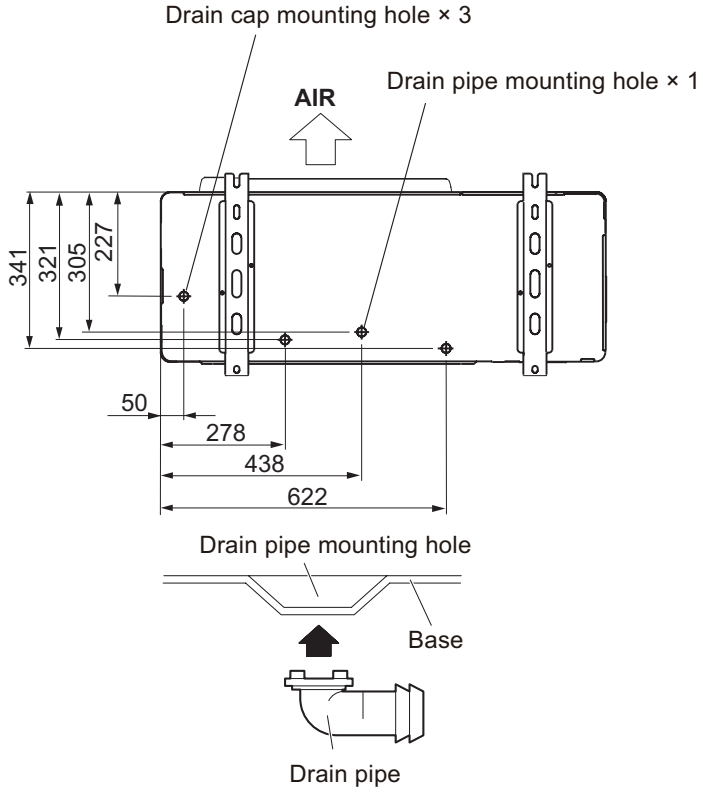

SYSTEM DESIGN

5-2. Indoor unit

■ General rules of drain piping

- Install the drain pipe with downward slope (1/100 or more) and so there are no rises in the pipe.
- Use general hard polyvinyl chloride pipe (VP25Ø3/4 [I.D.], Ø1-1/6 [O.D.]) and connect it with adhesive (polyvinyl chloride) so that there is no leakage.
- Support the drain pipe with supports each 1.5 to 2.0 m.
- Do not install any air vents or traps.
- Always insulate the drain pipe to prevent condensation.
- When connecting the drain hose to the indoor unit, use the accessory band. (Except wall mounted type)

■ Compact cassette type

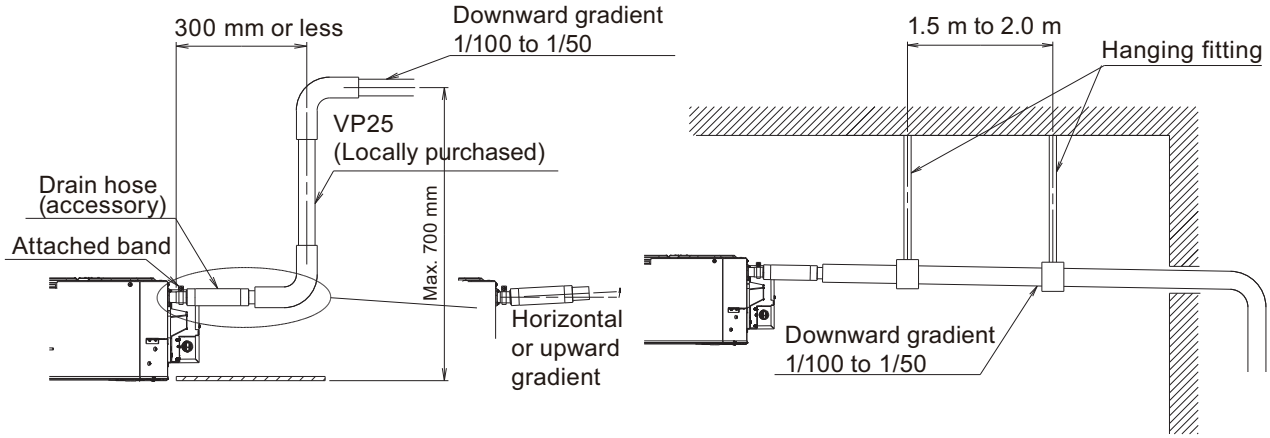

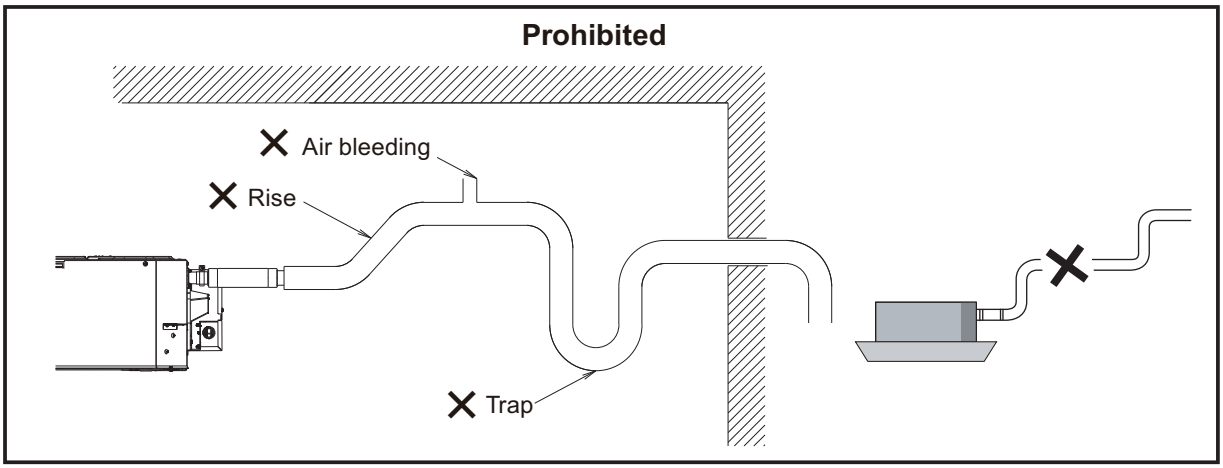

- Drain lift-up pipe restrictions:
  - Lift-up height ≤ 700 mm (from ceiling)
  - Drain hose (pipe) length ≤ 300 mm (between indoor unit and lift-up pipe)
- Water leakage may result from a failure to adhere to the restrictions above.

SYSTEM DESIGN

SYSTEM DESIGN

■ Circular flow cassette type and 4-way flow cassette type

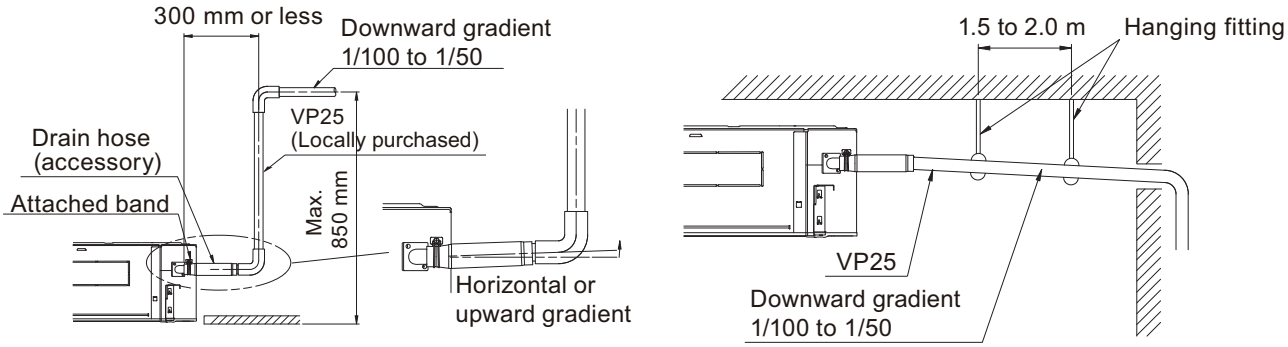

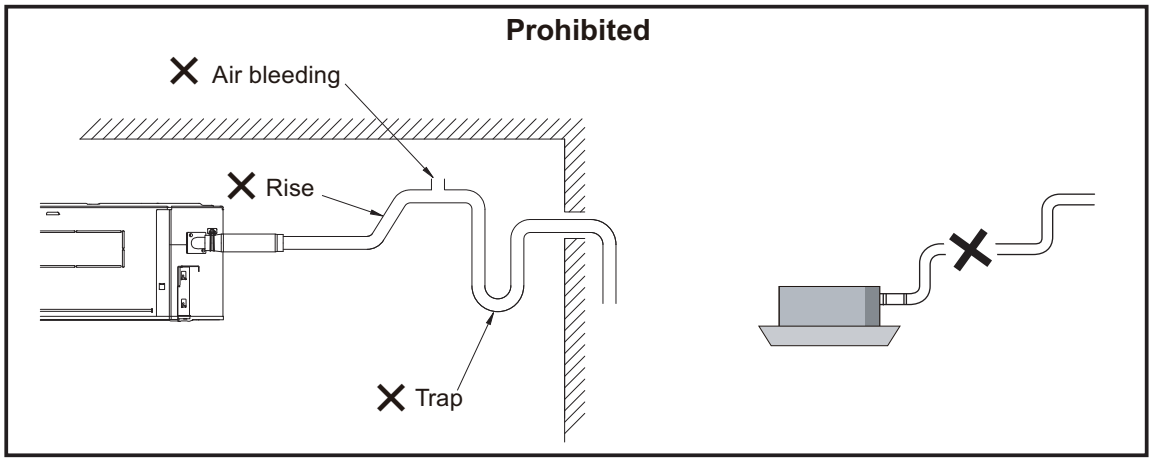

- Drain lift-up pipe restrictions:
  - Lift-up height ≤ 850 mm (from ceiling)
  - Drain hose (pipe) length ≤ 300 mm (between indoor unit and lift-up pipe)
- Water leakage may result from a failure to adhere to the restrictions above.

SYSTEM DESIGN

■ 3D flow cassette type

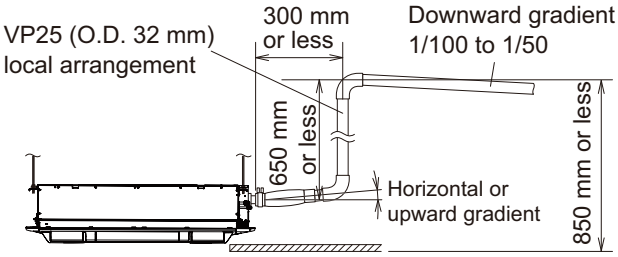

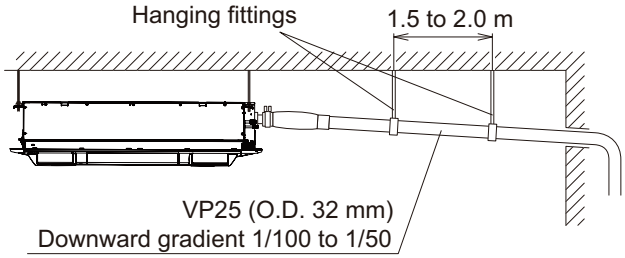

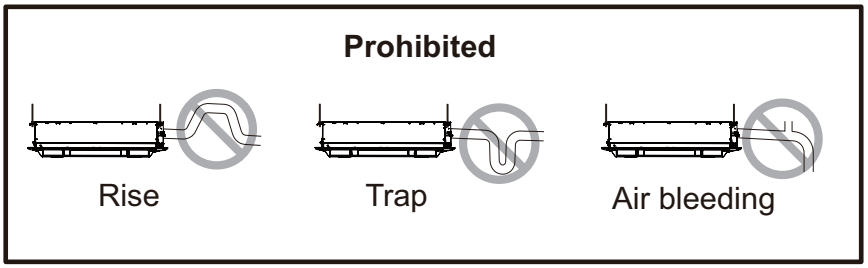

- Drain lift-up pipe restrictions:
  - Lift-up height ≤ 850 mm (from ceiling)
  - Drain hose (pipe) length ≤ 300 mm (between indoor unit and lift-up pipe)
- When a dimensions exceed the above restrictions will cause water leakage.
- Install the drain hose horizontally or with a slight upward gradient so air pocket is not generated in the drain pipe. The air pocket may cause noise occurred due to water backfl ow when the drain pump is stopped.

SYSTEM DESIGN

■ One way flow cassette type

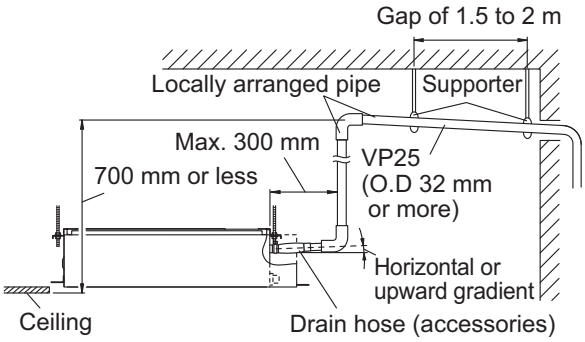

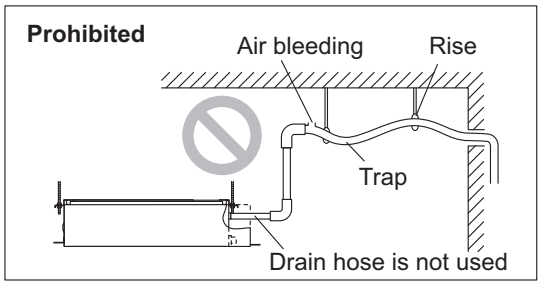

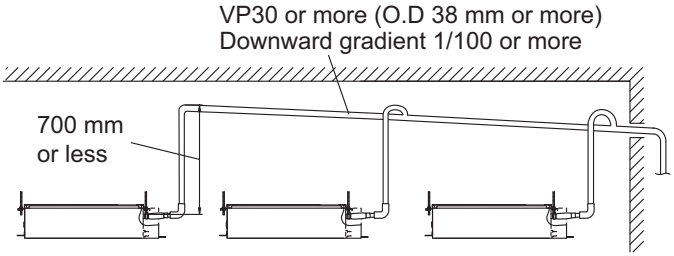

- Use general hard polyvinyl chloride pipe (VP25) (O.D. 32 mm).
- Do not perform a rise, trap, and air bleeding.
- Provide a downward gradient (1/100 or more).
- Provide supporters when long pipes are installed.
- Use an insulation material as needed to prevent the pipes from freezing.
- Install the pipes in a way that allows for the removal of the control box.

SYSTEM DESIGN

■ Low static pressure duct (Mini duct) type

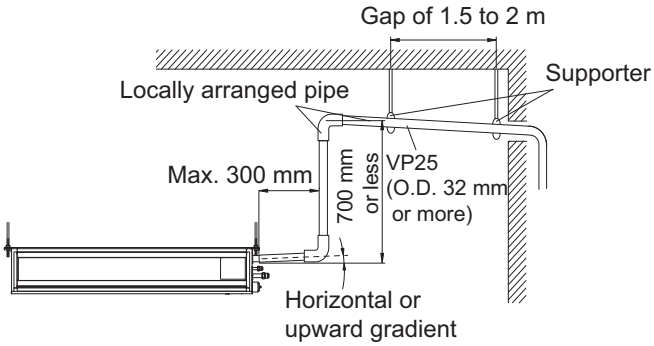

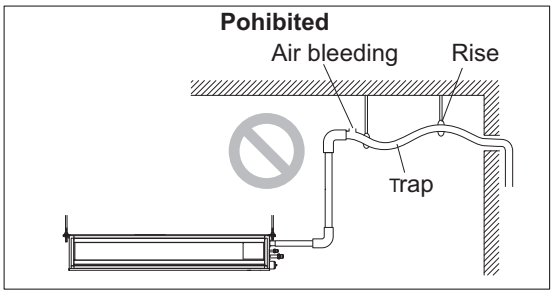

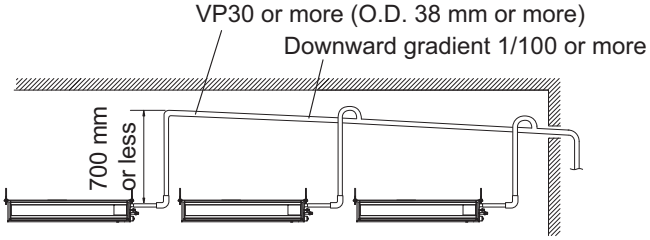

- Use general hard polyvinyl chloride pipe (VP25) (O.D. 32 mm).
- Do not perform a rise, trap, and air bleeding.
- Provide a downward gradient (1/100 or more).
- Provide supporters when long pipes are installed.
- Use an insulation material as needed to prevent the pipes from freezing.
- Install the pipes in a way that allows for the removal of the control box.

SYSTEM DESIGN

■ Low static pressure duct (Slim duct)/Slim concealed floor type

- **Ceiling concealed setting**

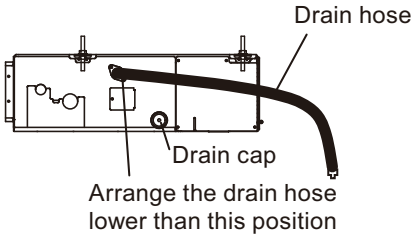

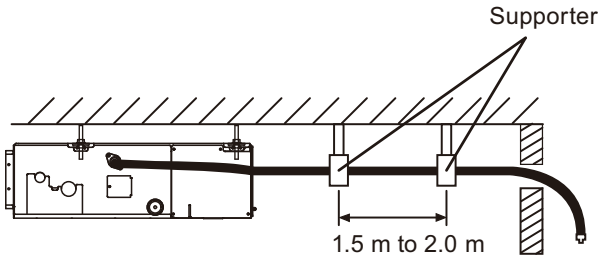

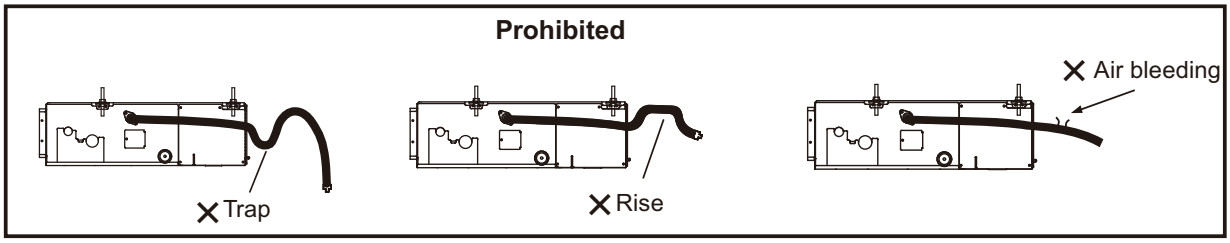

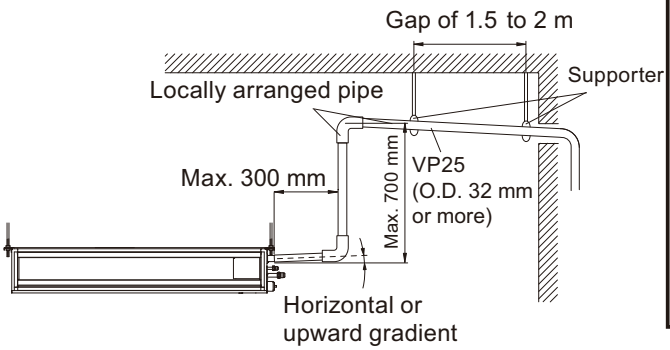

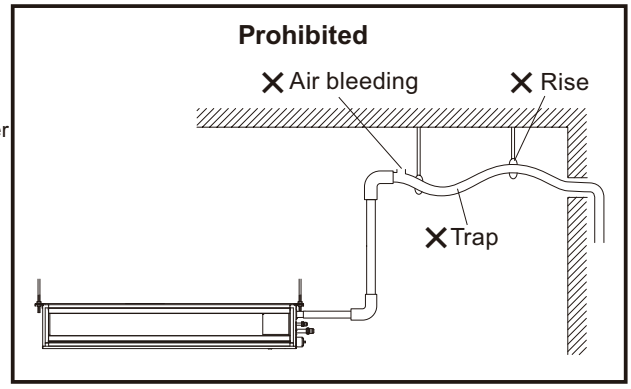

- **Floor standing concealed setting**

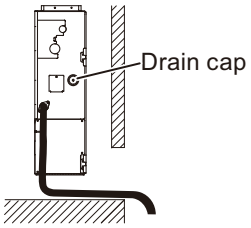

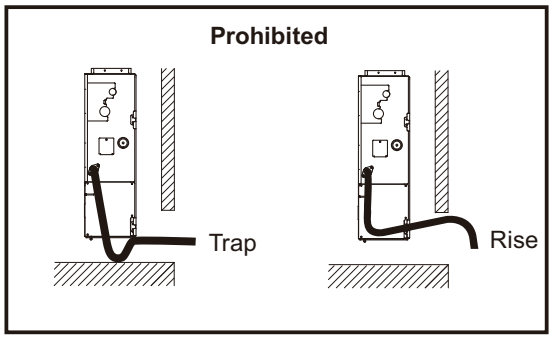

– Install the drain pipe with downward gradient (1/100 or more) and so there are no rises or traps in the pipe.
– Use general hard polyvinyl chloride pipe (VP25) (O.D. 32 mm) and connect it with adhesive (polyvinyl chloride) so that there is no leakage.
– When the pipe is long, install supporters.
– Do not perform air bleeding.
– Always heat insulate the indoor side of the drain pipe.

SYSTEM DESIGN

■ Low static pressure duct type (High efficiency)

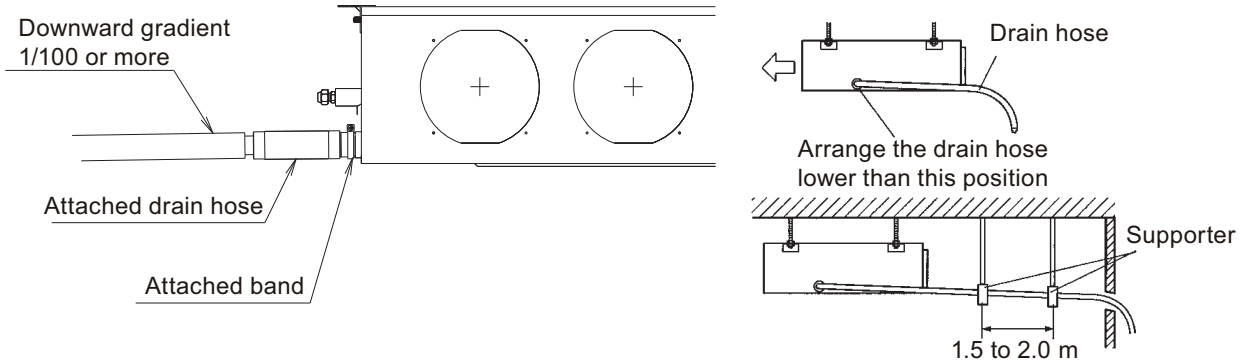

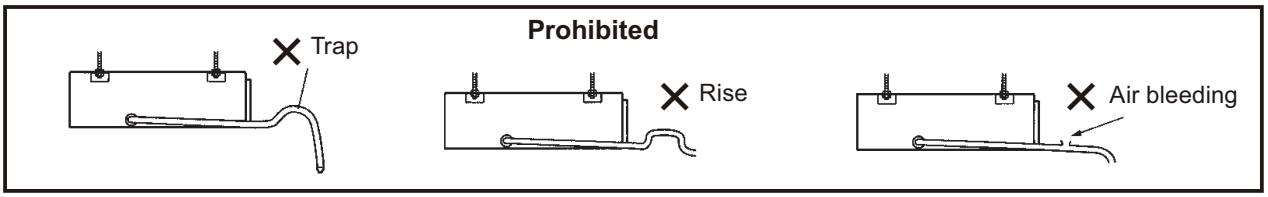

There is a drain port on the left and right sides. Select the drain port to match the local conditions.

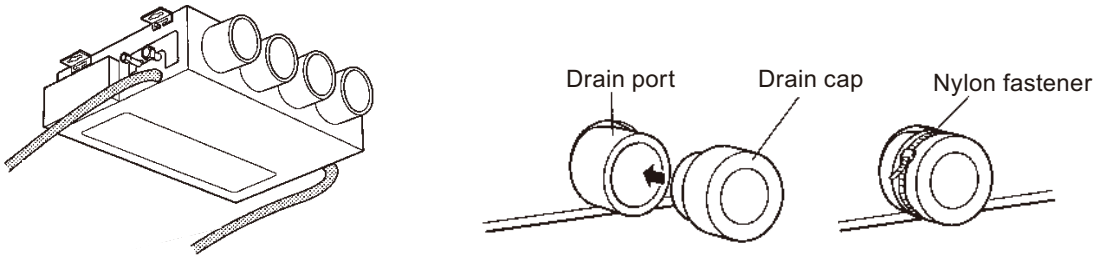

⚠ CAUTION

- Always check that the drain cap is installed to the unused drain port and fastened with the nylon fastener.
- If the drain cap is not installed, or is not sufficiently fastened by the nylon fastener, water may drip during the cooling operation.

SYSTEM DESIGN

■ Medium static pressure duct type

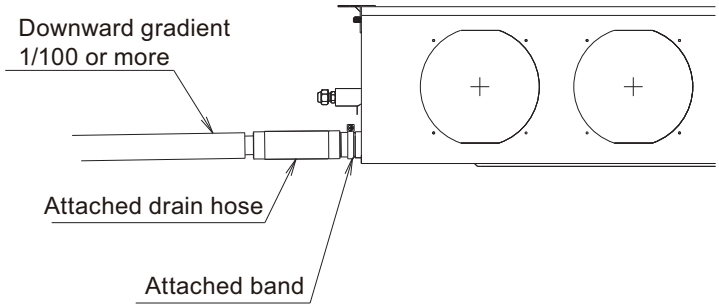

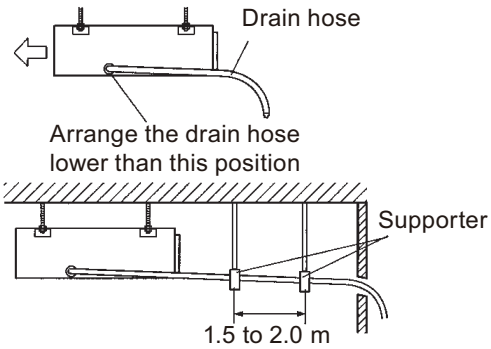

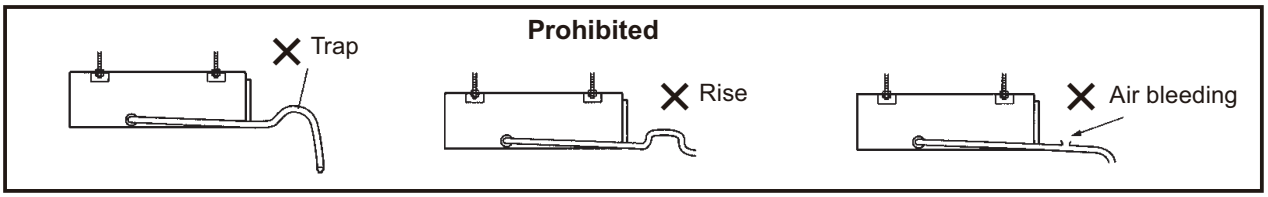

There is a drain port on the left and right sides. Select the drain port to match the local conditions.

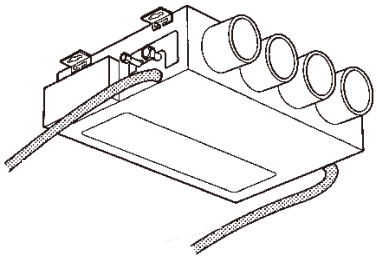

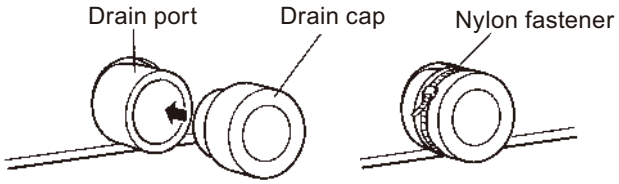

⚠ CAUTION

- Always check that the drain cap is installed to the unused drain port and fastened with the nylon fastener.
- If the drain cap is not installed, or is not sufficiently fastened by the nylon fastener, water may drip during the cooling operation.

SYSTEM DESIGN

■ High static pressure duct type

- **Main drain pipe**

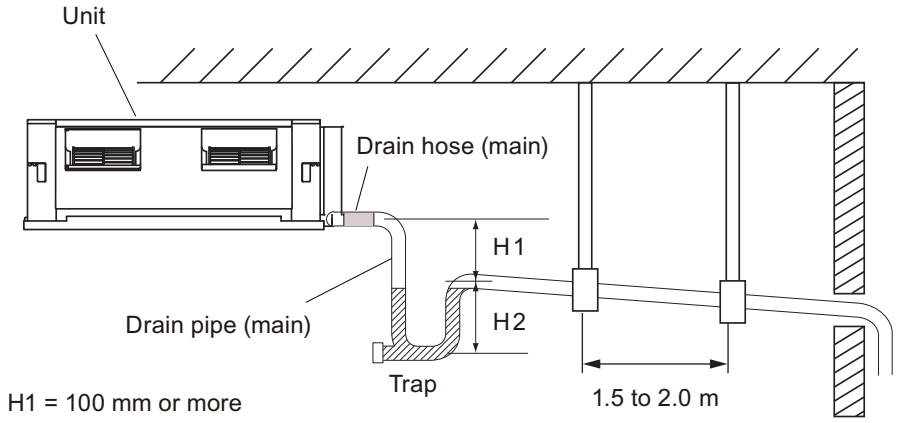

H1 = 100 mm or more

H2 = 50 - 100 mm

– Be sure to provide a drain trap for each indoor units.
– The drain trap will have no effect if placed after multiple indoor units.
– The position of the installed drain hose should have a downward slope of 1/100 or more.
– Make sure that the drain hose is installed without rises.
– Make the trap near to the indoor unit, position the trap in a location where it can be cleaned.

- **Safety drain pipe**
  There is no need to provide a trap for the overflow drain. If the overflow drain is connected to the main drain pipe, make the connection below the trap on the main drain pipe. Once installation is completed, checked the flow of the drain water.

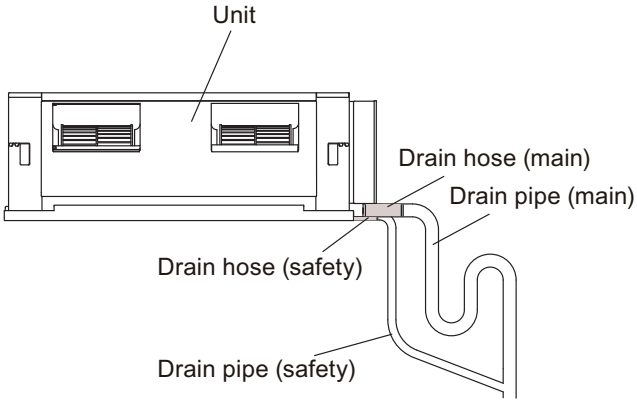

SYSTEM DESIGN

■ Compact floor type

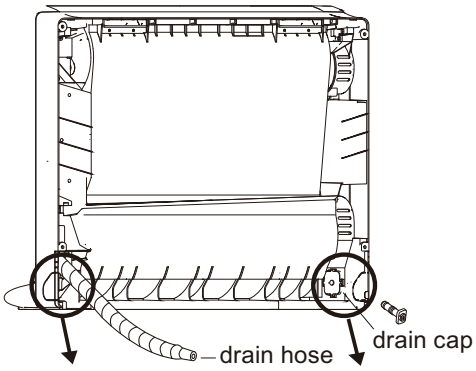

The drain hose can be connected at either side of the indoor unit.

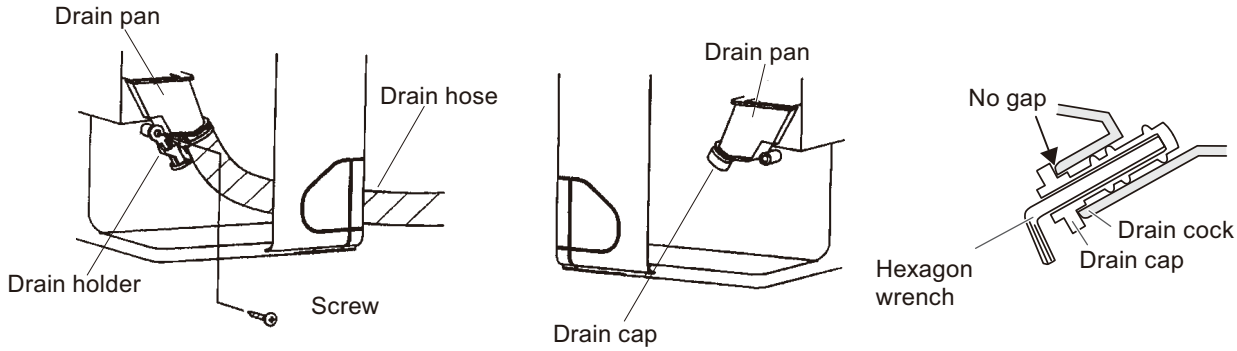

Left piping **For connection from the left rear**

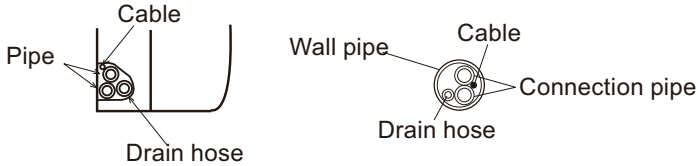

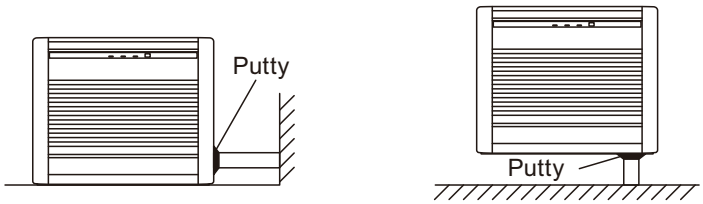

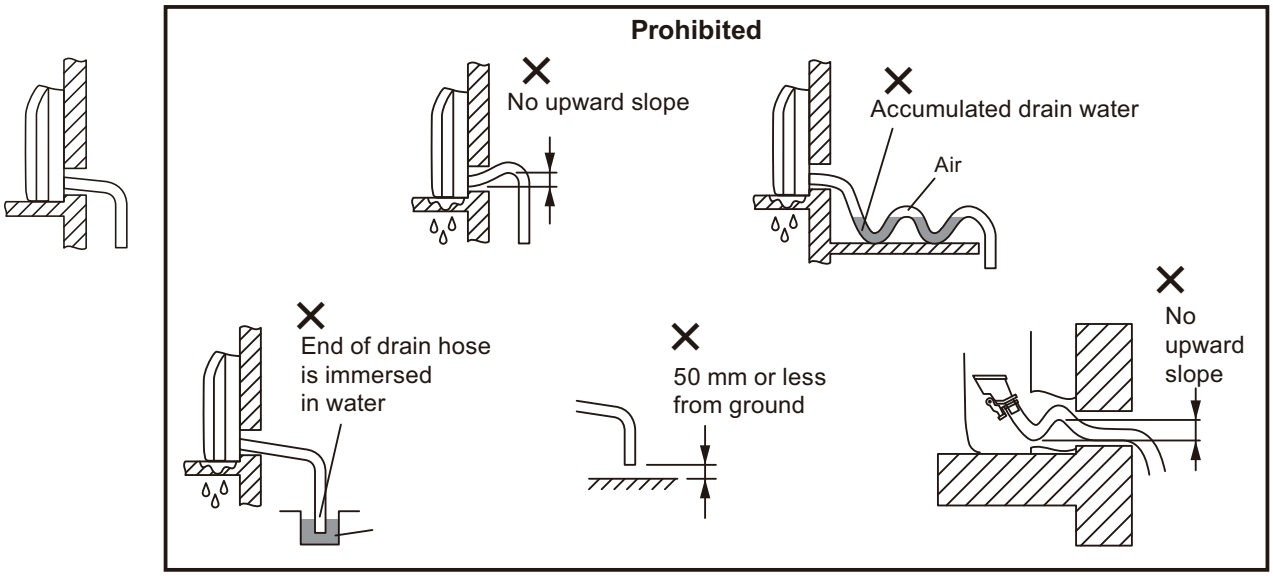

SYSTEM DESIGN

SYSTEM DESIGN

■ Floor/Ceiling type

- **Under ceiling setting**

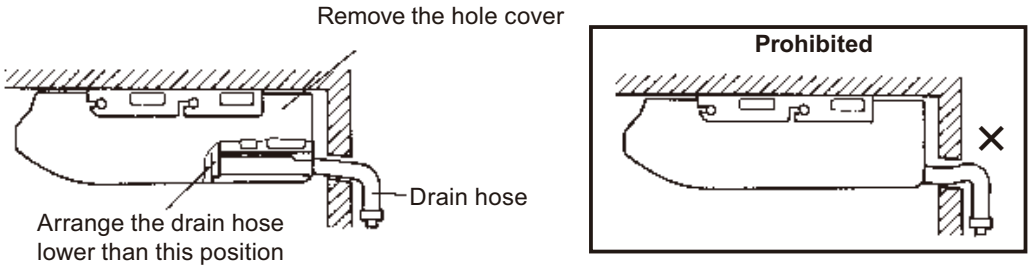

When drain hose is arranged backward, secure the drain hose with the VT wire.

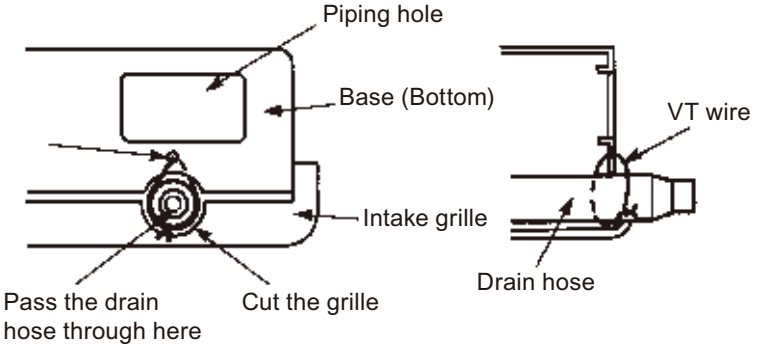

- **Floor console setting**

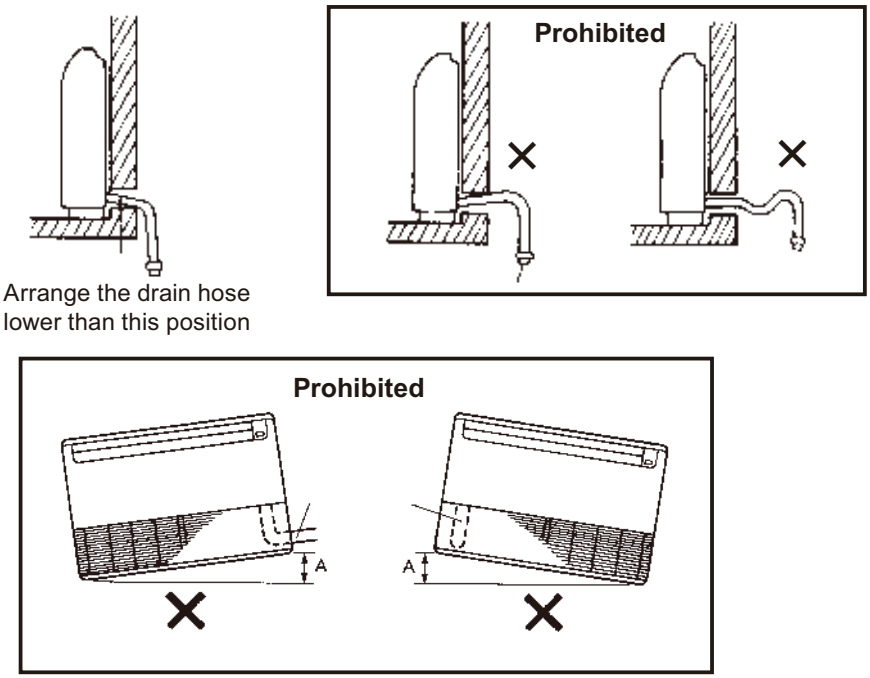

– Do not install the unit so that the drain hose side is too high.
– Height A should be less than 5 mm.

SYSTEM DESIGN

SYSTEM DESIGN

■ Ceiling type

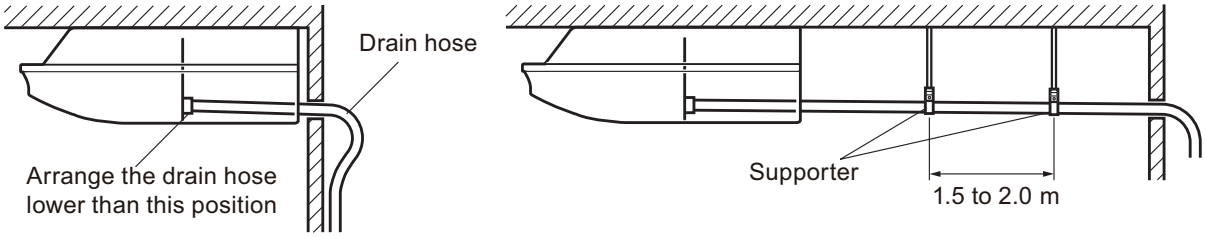

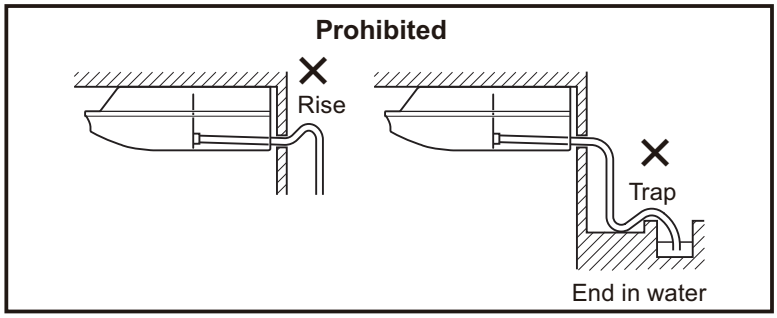

Fasten the drain pipe with VT wire so that the pipe slopes correctly within the indoor unit.

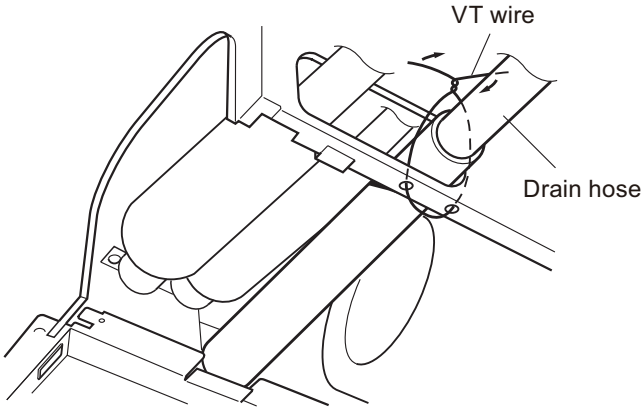

Indoor unit (rear view)

SYSTEM DESIGN

■ Wall mounted type

• Models: AS∗A18GBCH and AS∗A24GBCH

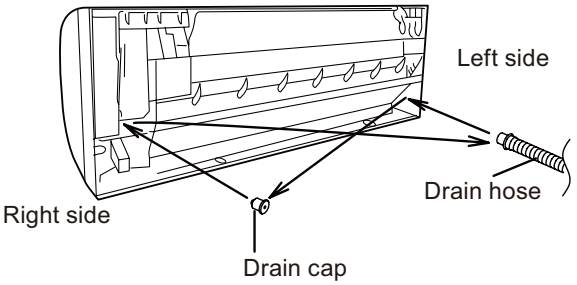

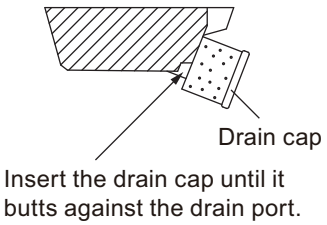

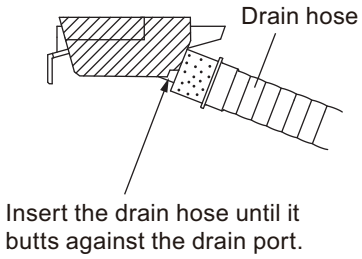

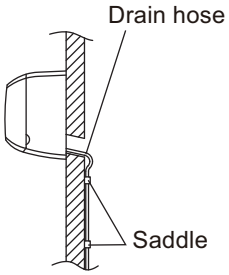

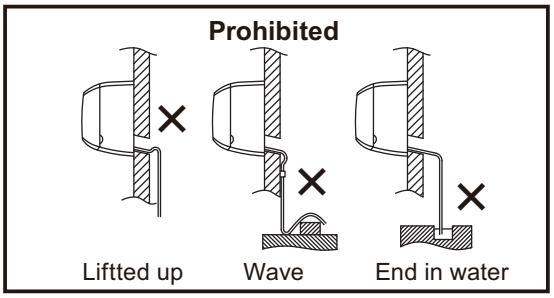

• Other than AS∗A18GBCH and AS∗A24GBCH

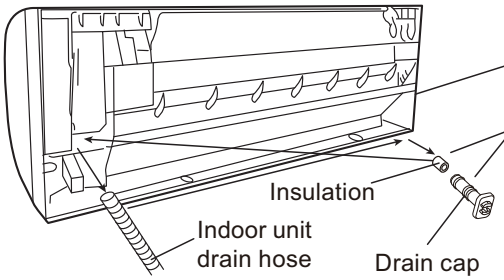

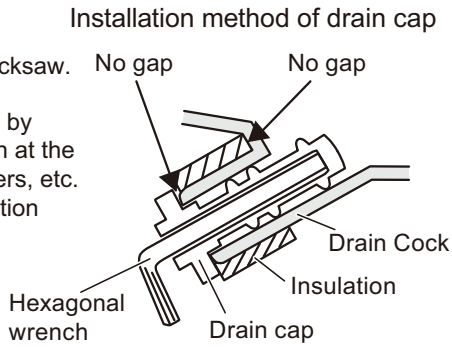

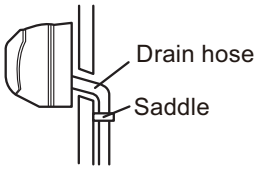

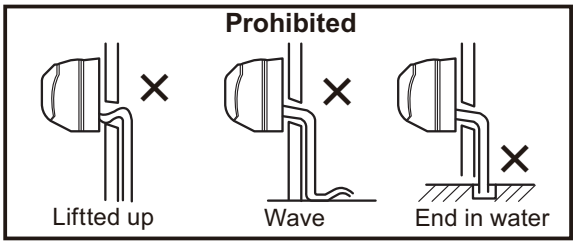

SYSTEM DESIGN

SYSTEM DESIGN

■ Central drain process

When conveying multiple drain pipes, install according to the procedure shown below.

- **For Compact cassette type, Circular flow cassette type, 3D flow cassette, and 4-way flow cassette type**

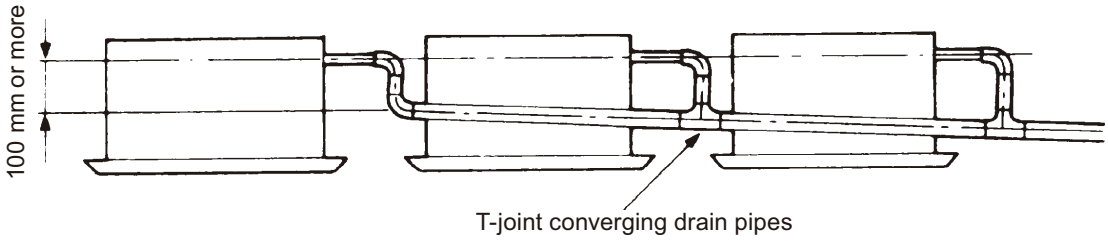

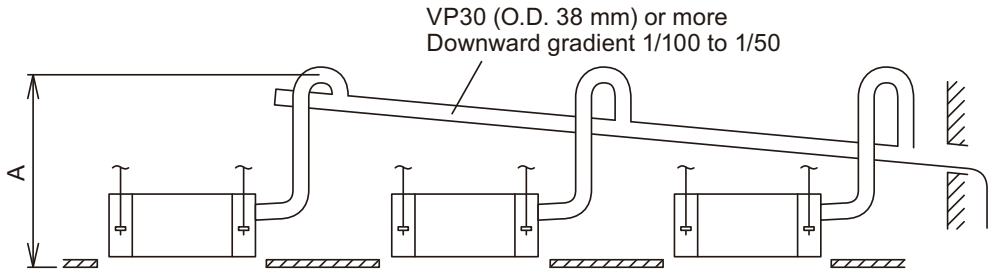

A	Compact cassette type	700 mm or less
	Circular flow cassette type 3D flow cassette 4-way flow cassette type	850 mm or less

- **For High static pressure duct type**

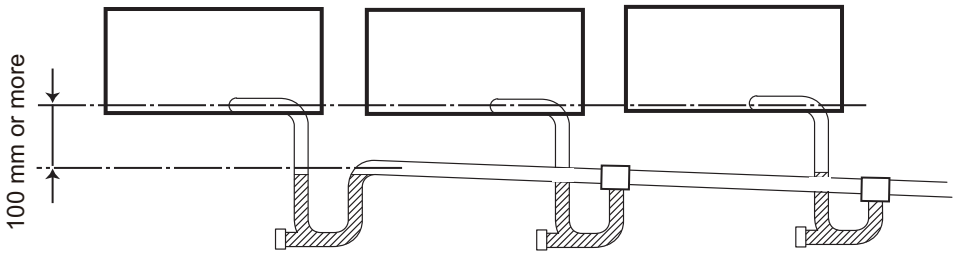

- **For Mini duct type and Slim duct type**

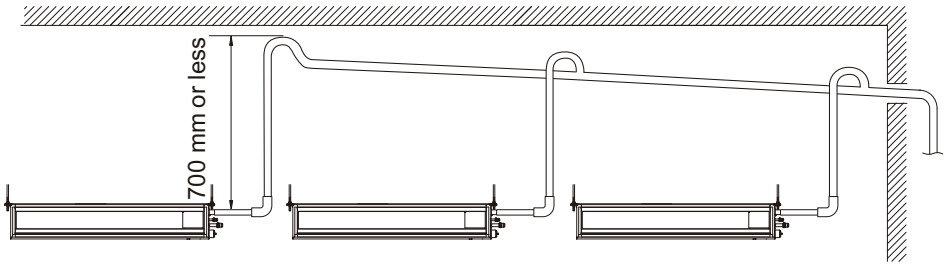

Select converging drain pipes whose diameter is suitable for the operating capacity of the unit.

SYSTEM DESIGN

■ Drain insulation

- Confirm water flows into drain pan of the indoor unit and drains from the pan once the drain hose is connected.
- Check drain pipes for leaks.
- Insulate the drain to prevent condensation.
- Secure the drain pipe to the wall with a saddle.

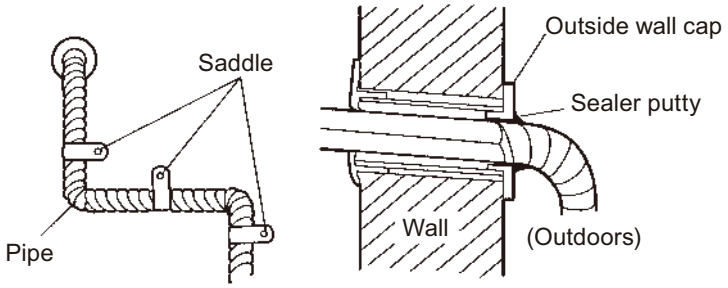

- Seal the hole around drain pipe with caulk.

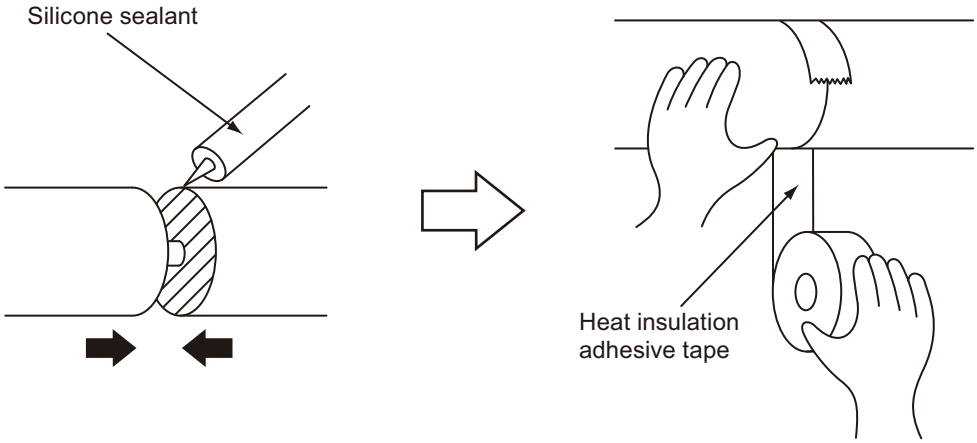

- Be sure to coat the entire and surface. Is there is a gap it could cause condensation.

SYSTEM DESIGN

Refrigerant R410A

INVERTER

AIRSTAGE™

Variable Refrigerant Flow System

7. FUNCTION SETTINGS

2022.04.15
DV_CH07_V2M023EF_10

CONTENTS

7. FUNCTION SETTINGS

1. System settings.....07-1

1-1. System type setting 07-2
1-2. Address setting.....07-4
1-3. Manual address setting method.....07-9
1-4. Address setting by remote controller 07-16
1-5. Automatic address setting 07-55
1-6. Terminal resistor setting 07-63
1-7. Indoor unit connection check.....07-64

2. Function settings 07-66

2-1. Setting on outdoor unit PCB 07-67
2-2. Setting on indoor unit PCB 07-74
2-3. Setting by service tool (UTY-ASGXZ1).....07-83
2-4. Indoor unit (setting by wireless remote controller) 07-87
2-5. Indoor unit (setting by UTY-RNK∗).....07-93
2-6. Indoor unit (setting by UTY-RSR∗, UTY-RHR∗).....07-96
2-7. Indoor unit (setting by UTY-RSK∗, UTY-RHK∗).....07-99
2-8. Indoor unit (setting by UTY-RNR∗Z∗) 07-102
2-9. Indoor unit (setting by UTY-RLR∗) 07-105
2-10. Function details 07-108
2-11. Wired remote controller (UTY-RNK∗).....07-112
2-12. Simple remote controller (UTY-RSK∗, UTY-RHK∗) 07-114
2-13. Group remote controller.....07-116
2-14. Touch panel controller 07-118
2-15. Central remote controller (UTY-DCG∗Z∗).....07-119
2-16. Wired remote controller (Touch panel) 07-121
2-17. Wired remote controller (UTY-RLR∗) 07-125
2-18. Simple remote controller (UTY-RSR∗, UTY-RHR∗).....07-127
2-19. Network convertor (UTY-VTGX, UTY-VTGXV).....07-129
2-20. Network convertor (UTY-VGGXZ1) 07-131
2-21. Signal amplifier 07-133
2-22. KNX convertor for VRF 07-135
2-23. KNX convertor for Indoor unit 07-137
2-24. Modbus converter for VRF.....07-138
2-25. Modbus converter for indoor unit 07-141
2-26. Network converter for LonWorks 07-143
2-27. Duct static pressure setting 07-144
2-28. Administrative indoor unit setting.....07-146
2-29. Energy saving setting on System controller.....07-148
2-30. Electricity charge apportionment setting (System controller, Touch panel controller).....
.....07-154

1. System settings

Set each switch to the corresponding system type as described in the accompanying explanation, and do not use a nonexistent switch combination.

⚠ CAUTION

- Perform the system type setting and address setting, before turning on the power.
- For proper operation of the air conditioner, perform the setting as described in the instruction.

RELATED LINKS

"System type setting" on page 07-2
"Address setting" on page 07-4
"Manual address setting method" on page 07-9
"Address setting by remote controller" on page 07-16
"Automatic address setting" on page 07-55
"Terminal resistor setting" on page 07-63
"Indoor unit connection check" on page 07-64

FUNCTION SETTINGS

1-1. System type setting

Other than the units mentioned below, refer to "Function settings" on page 07-66 and the installation manual.

■ Outdoor unit setting

<Step 1> Refrigerant circuit address setting	Set the rotary switch REF AD x10 and x1. For details of switch, refer to "Address setting" on page 07-4.
↓	
<Step 2> Terminal resistor setting	Set the DIP switch SET5-4. For details of switch, refer to "Terminal resistor setting" on page 07-63.
↓	
<Step 3> Indoor unit connection check	For details, refer to "Indoor unit connection check" on page 07-64.
↓	
<Step 4> Function setting	

■ Indoor unit setting

For the actual switch positions, refer to "Function settings" on page 07-66.

<Step 1> Refrigerant circuit address setting	Set the rotary switch REF AD x10 and x1. For details, refer to "Address setting" on page 07-4.
↓	
<Step 2> Indoor unit address setting	Set the rotary switch IU AD x10 and x1. For details, refer to "Address setting" on page 07-4.
↓	
<Step 3> Remote controller address setting	Set the rotary switch RC AD. For details, refer to "Address setting" on page 07-4.
↓	
<Step 4> Function setting	

FUNCTION SETTINGS

■ Remote controller setting

(Only for Wired remote controller and Simple remote controller.)

Dual remote controller setting	Set the SW2 of DIP switch 1. For details, refer to "Function settings" on page 07-66.

FUNCTION SETTINGS

1-2. Address setting

Address for each unit should be preset before starting system operation. Refer to "System design" in Chapter 6. SYSTEM DESIGN on page 06-1 to confirm the details of each unit, and perform the setting.

■ Outdoor unit addresses and setting ranges

Setting		Setting range	Type of switch	Remarks
A	Refrigerant circuit address	00—99	Setting example 01 REF AD x10 REF AD x1	Arbitrary numbers can be set in range of 00—99.
	Terminal resistor	ON/OFF	SET5	DIP switch SET5-4 Refer to "Terminal resistor setting" on page 07-63.

FUNCTION SETTINGS

FUNCTION SETTINGS

■ Indoor unit addresses and setting ranges

Setting		Setting range	Type of switch	Remarks
D	Refrigerant circuit address	00—99	**Manual address setting:** Setting example 01 REF AD x10 REF AD x1	Arbitrary numbers can be set in range of 00—99.
			Wireless R. C.: This switch is set to 00 at factory setting.	Refer to "Address setting by wireless remote controller" on page 07-16.
			Wired R. C. (3-wire type): This switch is set to 00 at factory setting.	Refer to "Address setting by wired remote controller (UTY-RNK∗)" on page 07-27.
			Simple R. C.: This switch is set to 00 at factory setting.	Refer to "Address setting by simple remote controller (UTY-RSR∗ and UTY-RHR∗)" on page 07-32.
			Wired R. C. (2-wire type): This switch is set to 00 at factory setting.	Refer to "Address setting by wired remote controller (Touch panel) (UTY-RNR∗Z∗)" on page 07-45.
			Automatic address setting: This switch is set to 00 at factory setting.	Refer to "Automatic address setting of indoor unit" on page 07-59.
E	Indoor unit address	00—63	**Manual address setting:** Setting example 12 IU AD x10 IU AD x1	Arbitrary numbers can be set in range of 00—63.
			Wireless R. C.: This switch is set to 00 at factory setting.	Refer to "Address setting by wireless remote controller" on page 07-16.
			Wired R. C. (3-wire type): This switch is set to 00 at factory setting.	Refer to "Address setting by wired remote controller (UTY-RNK∗)" on page 07-27.
			Simple R. C.: This switch is set to 00 at factory setting.	Refer to "Address setting by simple remote controller (UTY-RSR∗ and UTY-RHR∗)" on page 07-32.
			Wired R. C. (2-wire type): This switch is set to 00 at factory setting.	Refer to "Address setting by wired remote controller (Touch panel) (UTY-RNR∗Z∗)" on page 07-45.
			Automatic address setting: This switch is set to 00 at factory setting.	Refer to "Automatic address setting of indoor unit" on page 07-59.
F	Remote controller address	00—15	**Manual address setting:** Setting example 10 RC AD	3-wire type R. C. can be set in range of 0—15.
			Automatic address setting: This switch is set to 00 at factory setting.	2-wire type only.

FUNCTION SETTINGS

FUNCTION SETTINGS

■ Addresses and setting ranges for controllers, convertors or other devices

Unit	Setting		Setting range	Type of switch	Setting references
Touch panel controller	G	Controller address	00—15 *1		"Touch panel controller" on page 07-118"Touch panel controller" on page 07-118
Network converter	H	Convertor address	00—15 *1		"Network convertor (UTY-VTGX, UTY-VTGXV)" on page 07-129 and "Network convertor (UTY-VGGXZ1)" on page 07-131
		Refrigerant circuit address	00—99	Setting example 01 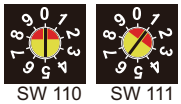 SW 110 (10 digit) SW 111 (1 digit)	
Group remote controller	I	Group remote controller address	00—03		"Group remote controller" on page 07-116
Wired, simple remote controller (3-wire type)	J	Dual remote control	ON/OFF	Switch 2 of DIP switch 1	"Wired remote controller (UTY-RNK∗)" on page 07-112 "Simple remote controller (UTY-RSK∗, UTY-RHK∗)" on page 07-114
Signal amplifier	K	Signal amplifier address	1—8	**Manual address setting**	"Signal amplifier" on page 07-133
				Automatic address setting: This switch is set to 1 at factory setting.	"Automatic address setting of signal amplifier" on page 07-57
Modbus converter	Q	Controller/ convertor address	00—15 *1		"Modbus converter for VRF" on page 07-138"Modbus converter for VRF" on page 07-138
Network converter for LonWorks	M				"Network converter for LonWorks" on page 07-143
Central remote controller	N				"Central remote controller (UTY-DCG∗Z∗)" on page 07-119
Wired remote controller (2-wire type*3)	F	Remote controller address	1—32 *2	**Manual address setting**	"Wired remote controller (Touch panel)" on page 07-121 and "Wired remote controller (UTY-RLR∗)" on page 07-125
			0—15	**Automatic address setting**	
	J	Dual remote control	ON/OFF		

*1: The sum total of the Touch panel controller, Central remote controller, Network converter for Group remote controller, Modbus converter, and Network converter for LonWorks is a maximum of 16.

NOTE: For Touch panel controller, Central remote controller, Network converter for Group remote controller, Modbus converter, and Network converter for LonWorks connected in same VRF network system, set an exclusive address on each device.

*2: The address can be set in the range of 1 to 32. However, do not set the same number as that for the remote controller address of an indoor unit connected using the same remote-control cable.

FUNCTION SETTINGS

Set the remote controller address of 2-wire type remote controller in manual address setting only. It is not necessary to set in automatic address setting.

*3: Except Wired remote controller (UTY-RCR∗Z1).

■ Setting example

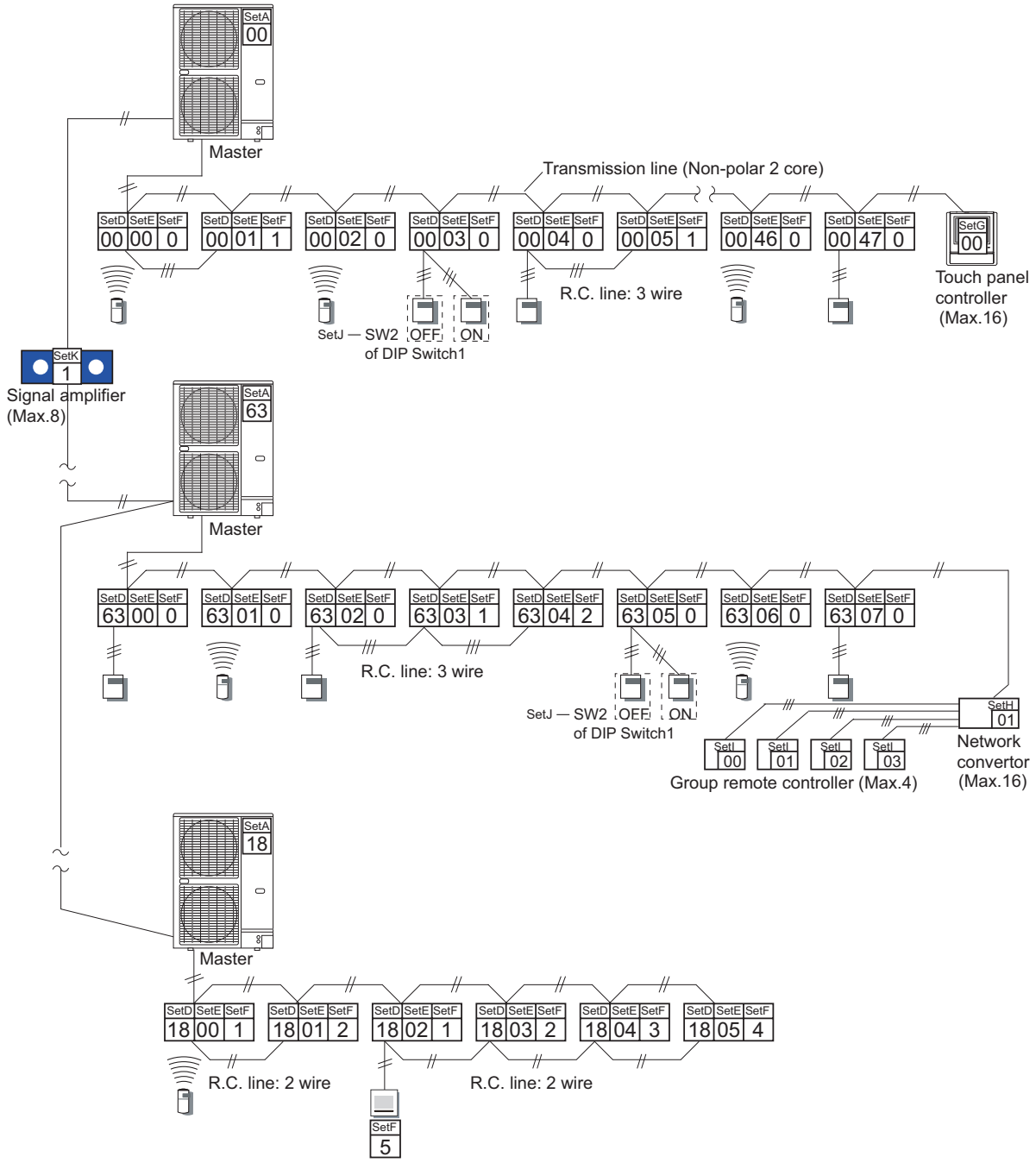

FUNCTION SETTINGS

Setting subject		Set	Application	Remarks
Outdoor unit	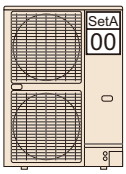	Set A	Refrigerant circuit address	Rotary switch REF AD x10, x1
Indoor unit	SetD: 63 SetE: 06 SetF: 0	Set D	Refrigerant circuit address	REF AD x10
				REF AD x1
		Set E	Indoor unit address	IU AD x10
				IU AD x1
		Set F	Remote controller address	RC AD
Wired remote controller (2-wire)		Set F	Remote controller address	Self: 0 (Fixed)
Touch panel controller		Set G	Controller address	Max. 16
Network converter		Set H	Convertor address	For group remote controller: Max. 16
			Refrigerant circuit address	For single split AC: Max. 100
Group remote controller		Set I	Group remote controller address	Max. 4
Wired, simple remote controller (3-wire)		Set J	Dual remote control	Switch 2 of DIP switch 1
Signal amplifier		Set K	Signal amplifier address	
Network convertor for LonWorks		Set M	Convertor address	
Central remote controller		Set N	Controller address	Max. 16

Instructions for setting the address:

- The refrigerant circuit address of the indoor units and outdoor units can be set to arbitrary numbers in the range of 0 to 99.
- The indoor unit address can be set to arbitrary numbers in the range of 0 to 63.
- In case of 3-wire type of remote controller, set the remote controller address in the order of 0, 1, 2.....15. (Blank is not allowed.)
- In the automatic address setting of 2-wire type remote controller, the remote controller address is set to “0” automatically.
- In the manual address setting of 2-wire type remote controller, the remote controller address can be set to arbitrary numbers in the range of 1 to 15. (Setting to “0” is prohibited.)
- Touch panel controller address can be set to arbitrary numbers in the range of 0 to 15.
- The sum total of the Touch panel controller, Central remote controller, Network converter for Group remote controller, Modbus converter, and Network converter for LonWorks is a maximum of 16.
- For Touch panel controller, Central remote controller, Network converter for Group remote controller, Modbus converter, and Network converter for LonWorks connected in same VRF network system, set an exclusive address on each device.

FUNCTION SETTINGS

1-3. Manual address setting method

■ Address setting description

- **Refrigerant circuit address (Set A and Set D)**
  When there are 2 or more refrigerant systems in one VRF network system, an exclusive refrigerant circuit address should be set for each refrigerant system.
  Refrigerant system: One refrigerant circuit which has connected between outdoor unit and indoor unit by piping.

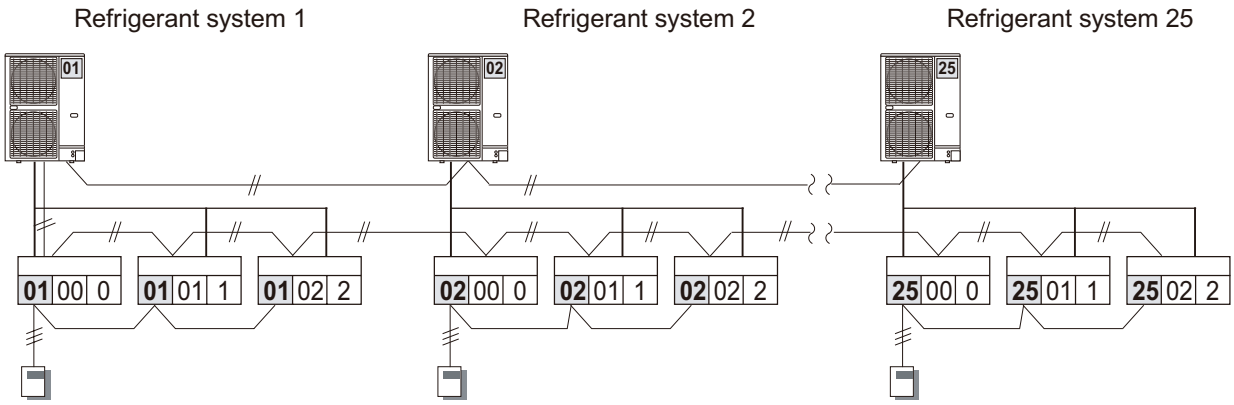

- **Setting example**

Refrigerant circuit address	Outdoor unit (Set A)		Indoor unit (Set D)	
	Rotary switch setting		Rotary switch setting	
	REF AD x10	REF AD x1	REF AD x10	REF AD x1
01	0	1	0	1
11	1	1	1	1
25	2	5	2	5
50	5	0	5	0

– Setting range: 00—99 (Arbitrary numbers can be set.)
– Same address should be set in all the indoor unit and outdoor unit in the same refrigerant circuit.

FUNCTION SETTINGS

FUNCTION SETTINGS

- **Indoor unit address (Set E)**
  An exclusive indoor unit address should be set for each indoor unit in the same refrigerant system.

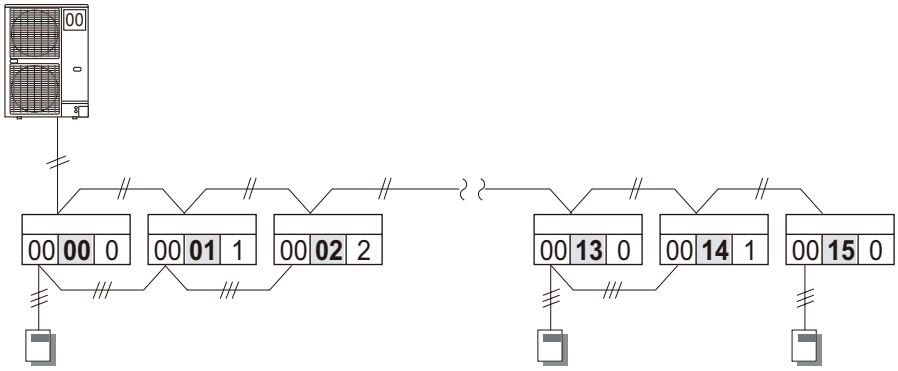

Indoor unit address	Rotary switch setting	
	IU AD x10	IU AD x1
03	0	3
11	1	1
30	3	0
47	4	7

– Setting range: 00—63 (Arbitrary numbers can be set.)
– Do not set indoor unit address to the range of 64—99.
– Do not set the same address number to 2 or more indoor units.

FUNCTION SETTINGS

- **Remote controller address (Set F)**
  Maximum of 16 indoor units can be controlled by 1 individual remote controller with connecting remote controller cable.
  Those units connected with remote controller cable are regarded as a remote controller group. Even there is only 1 indoor unit with one or no wired controller is connected, it is regarded as one remote controller group.
  – **3-wire type (Only for manual address setting):**

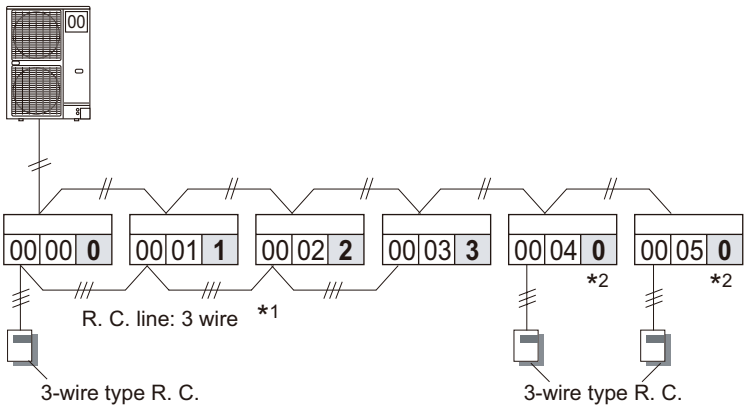

Remote controller address	Rotary switch RC AD	Switch position
0	0	
1	1	
2	2	•
3	3	•
4	4	•
5	5	•
6	6	•
7	7	•
8	8	•
9	9	•
10	A	•
11	B	
12	C	•
13	D	•
14	E	•
15	F	

*1: Set the remote controller address in order of 0, 1, 2, ..., 15. (Blank is now allowed.)

*2: When remote controller group is not constructed (1:1 connection of indoor unit and remote controller), be sure that the remote controller address is set to the initial setting “0” (factory setting).

– **2-wire type:**
In initial starting up of this unit, addresses will be automatically set. Do not change the remote controller address for the indoor unit. (Keep it at the initial setting “0”.)

FUNCTION SETTINGS

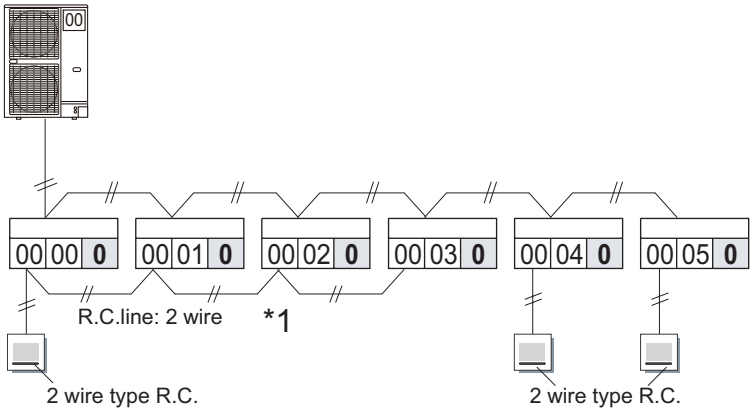

*1: Set the remote controller address “0” only.
Address is automatically assigned from Remote controller.

- **Touch panel controller setting (Set G)**
  Before performing the initial setting, set the Touch panel controller address first. For details, refer to the setting manual.

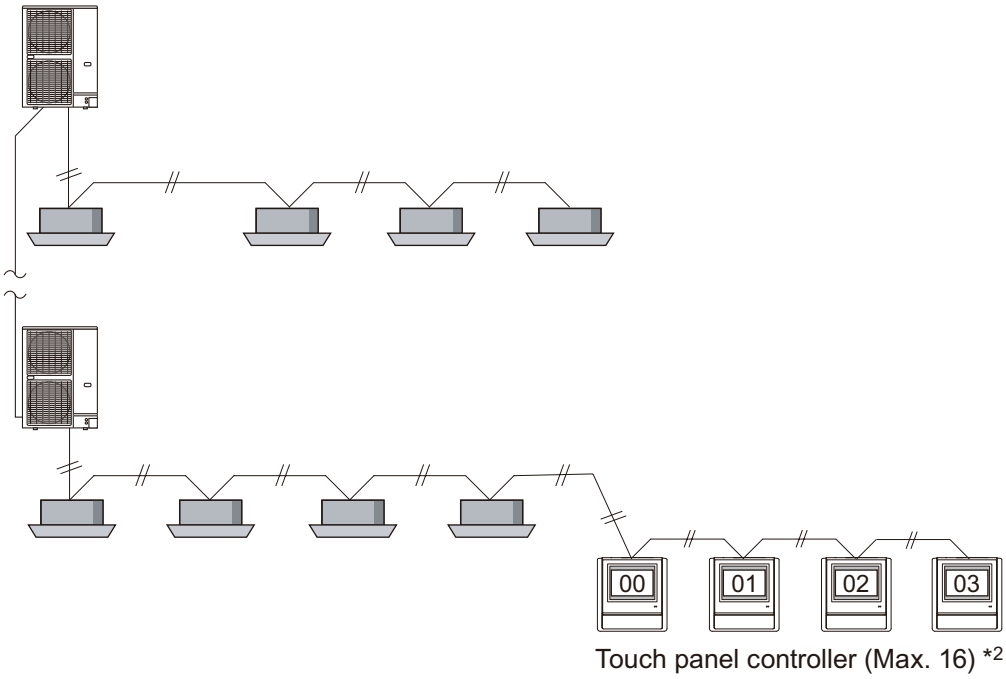

*: The sum total of the Touch panel controller, Central remote controller, Network converter for Group remote controller, Modbus converter, and Network converter for LonWorks is a maximum of 16.

FUNCTION SETTINGS

- **Network converter setting (Set H)**
  Set the rotary switches 110 and 111 on the Network converter PCB.

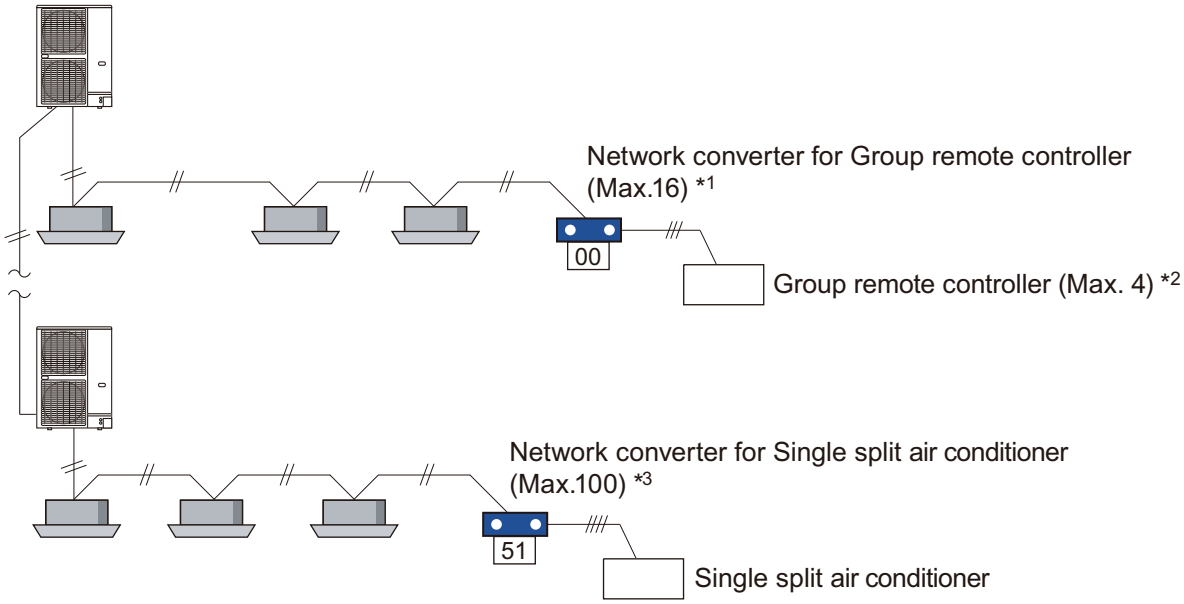

*1: The sum total of the Touch panel controller, Central remote controller, Network converter for Group remote controller, Modbus converter, and Network converter for LonWorks is a maximum of 16.

*2: Up to 64 Group remote controllers are connectable in one VRF Network system.

*3: When connecting the Network converter for single split air conditioner, set up the number so that the refrigerant circuit address number of the outdoor unit and indoor unit does not overlap. The sum total of the refrigerant circuit address of Network converter for single split air conditioner, outdoor unit and the indoor unit is a maximum of 100.

- **Group remote controller address (Set I)**
  Before performing the initial setting, set the Group remote controller address first.

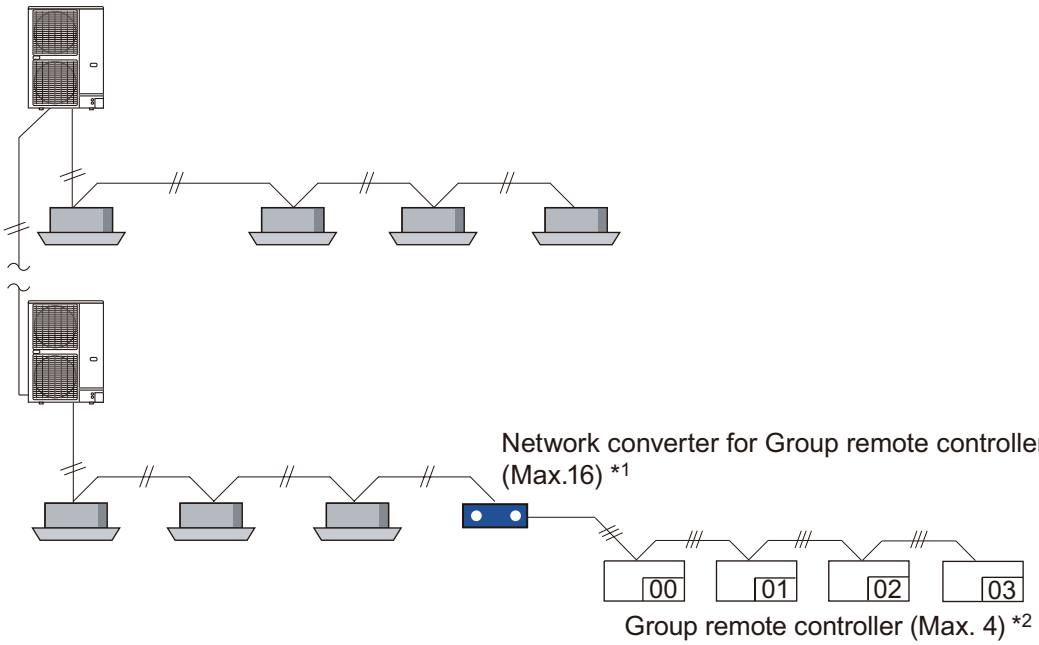

*1: The sum total of the Touch panel controller, Central remote controller, Network converter for Group remote controller, Modbus converter, and Network converter for LonWorks is a maximum of 16.

*2: Up to 64 Group remote controllers are connectable in one VRF Network system.

FUNCTION SETTINGS

- **Dual remote control switch (Set J)**
  According to the number of connecting wired remote controller(s), turn “ON” or “OFF” the switch 2 of DIP switch 1 on the slave remote controller.

	2 wired remote controllers are connected in a remote-control group	Only 1 wired remote controller is connected in a remote-control group
	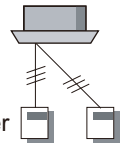	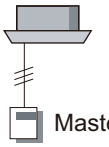
	Switch 2 of DIP switch1	
Master controller	OFF	OFF
Slave controller	ON	—

When two wired remote controllers are connected in a remote-control group, turn the switch 2 of DIP switch 1 on the slave remote controller “ON”.

When only one wired remote controller is connected in a remote-control group, turn the switch 2 of DIP switch 1 on the slave remote controller “OFF”.

NOTES:

- Timer setting is not available on the slave remote controller.
- Last command takes priority.

- **Signal amplifier address (Set K)**

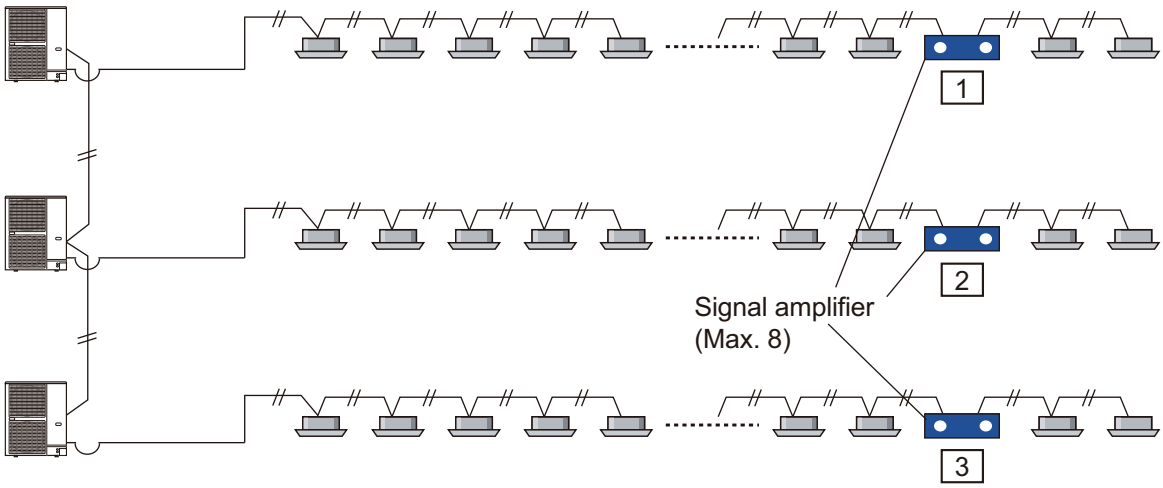

FUNCTION SETTINGS

- **Network converter for LonWorks® setting (Set M)**

  NOTE: Setting up more than one Network convertor in one VRF network system is prohibited.

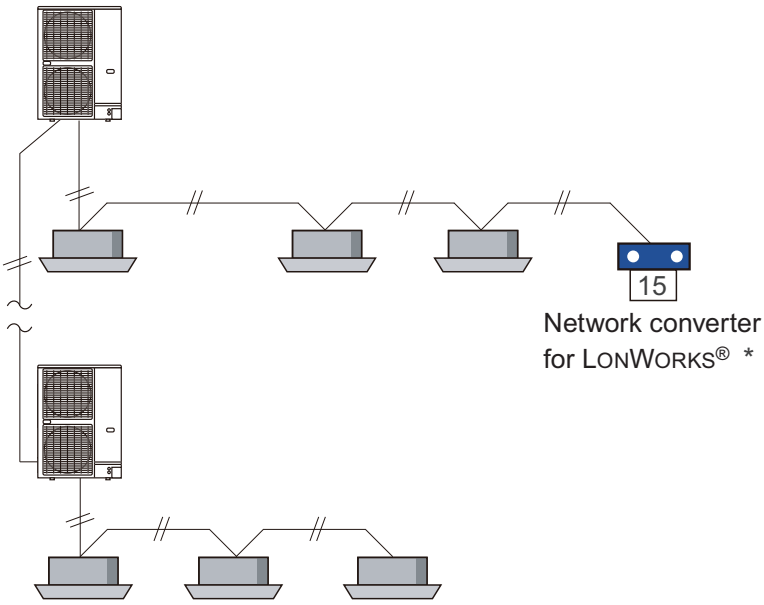

*: The sum total of the Touch panel controller, Central remote controller, Network converter for Group remote controller, Modbus converter, and Network converter for LonWorks is a maximum of 16.

- **Central remote controller address (Set N)**
  Before performing the initial setting, set the Central remote controller address first.
  For details, refer to the setting manual.

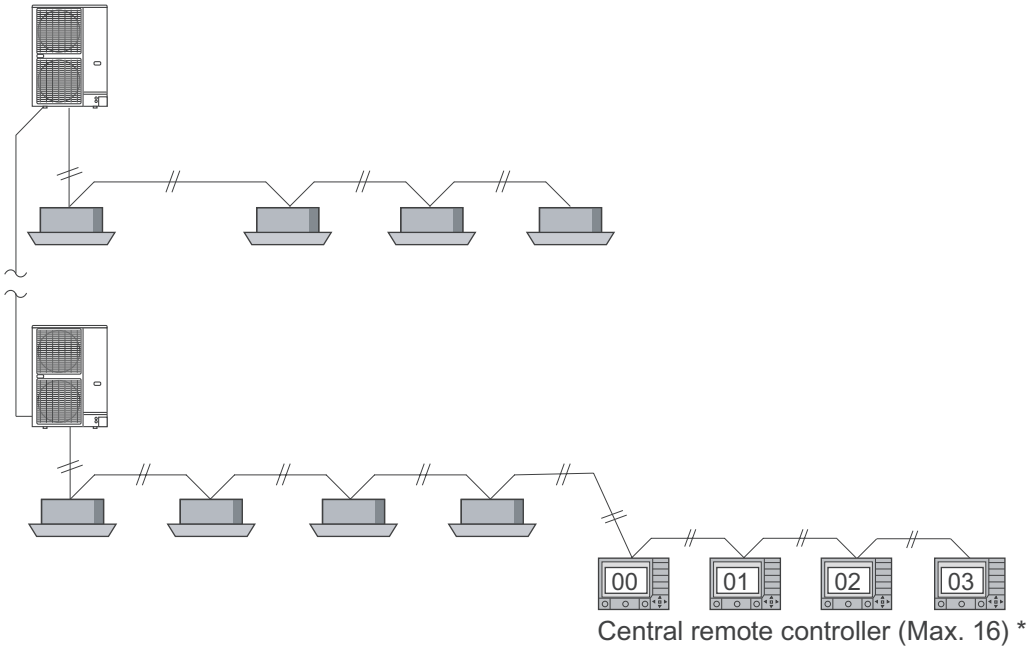

*1: Setting up more than one Network converter in one VRF network system is prohibited.

*2: The sum total of the Touch panel controller, Central remote controller, Network converter for Group remote controller, Modbus converter, and Network converter for LonWorks is a maximum of 16.

FUNCTION SETTINGS

1-4. Address setting by remote controller

■ Address setting by wireless remote controller

- A wireless remote controller is required to set the infrared address setting.
- Infrared address setting function is available in all indoor units with infrared signal receiver.
- Infrared address setting for duct type and cassette type models can be performed by using the optional IR receiver unit.

NOTE: The beeping sound is emitted from the Indoor unit PCB. Since the indoor unit is installed far away, the sound might not be heard. (The sound is not emitted from the IR receiver unit.)

- The indoor unit address and the indoor unit refrigerant circuit address can be set by performing the infrared address setting.
- When remote controller address setting is required, set by the rotary switch on the indoor unit PCB.

● Preparation

1. (This step is unnecessary for newly installed and not yet set the switch.)
   Set the rotary switch on the indoor unit PCB for manual address setting. (Initially set to “00” as factory setting.)
   The layout of the switches differs by the type of the indoor unit. For the details, refer to "Setting on indoor unit PCB" on page 07-74.

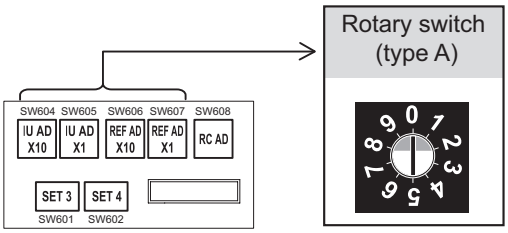

IU AD x10
IU AD x1
REF AD x10
REF AD x1

Check the switch position is set at “0”.
(Factory setting)

2. Before turning on the power of indoor unit, reconfirm following items:
   - Piping air tight test and vacuuming have been performed firmly.
   - There is no wiring mistake.

3. Turn on the power of indoor units.
   By turning on the power, the indoor units initialize EEV.

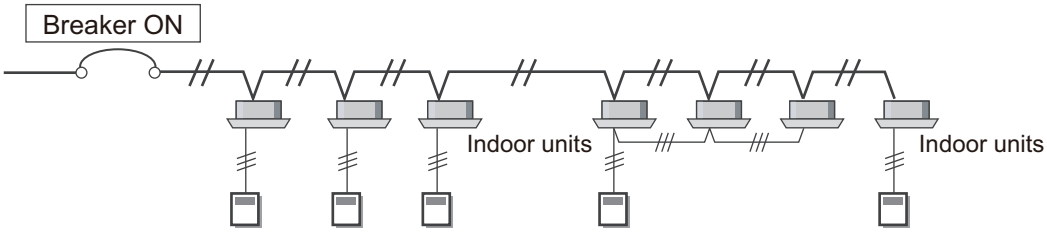

FUNCTION SETTINGS

FUNCTION SETTINGS

● Button name and function

Address code indicator on the remote controller and the operation lamp on IR receiver unit and on the indoor unit are as shown in the figures below.

- For an outline of the address setting, refer to "Address setting" on page 07-4.
- For the details of function number and setting number used for the function setting, refer to "Function details" on page 07-108.
- It does not matter whether the refrigerant circuit address or indoor unit address is set first. (The method shown here sets the indoor unit address first.)
- During address setting mode, indoor unit reject the any operation command from remote controller.

Wireless remote controller

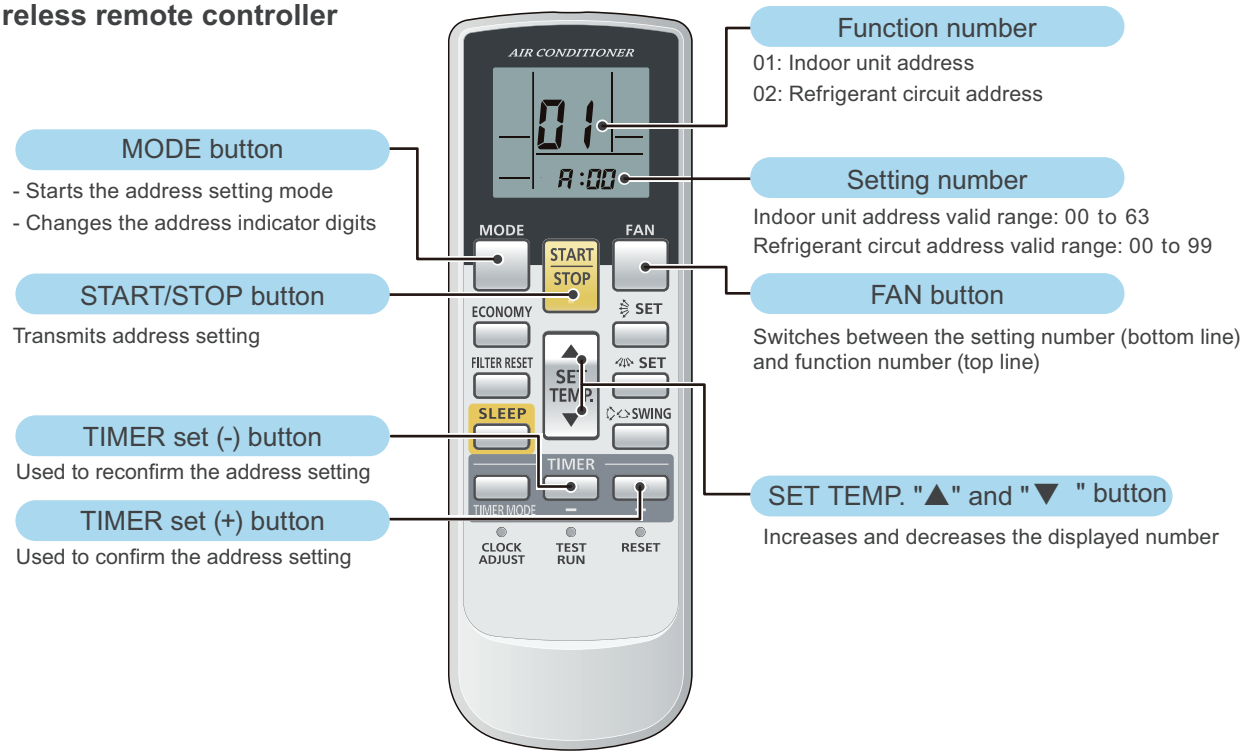

IR receiver unit

Indoor unit

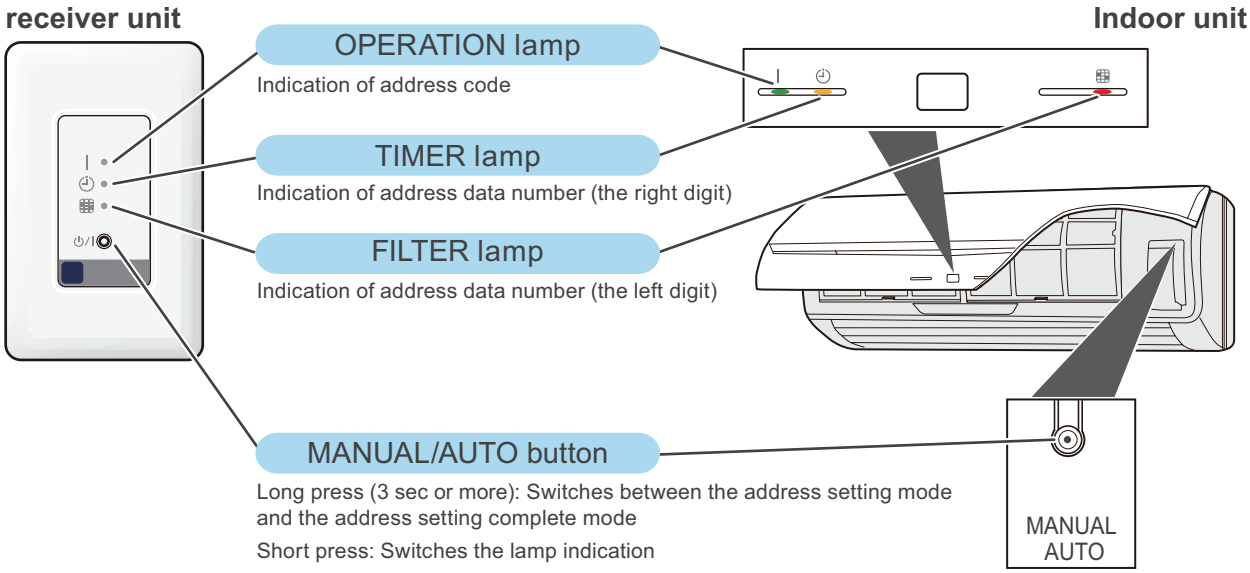

	Indoor unit address display	Refrigerant circuit address display
Operation lamp	ON / OFF (Light continuously)	ON / OFF (Light 1 sec. ON / 1 sec. OFF)

RELATED LINKS

"Indoor unit (setting by wireless remote controller)" on page 07-87

FUNCTION SETTINGS

● Entering function setting mode

NOTE: Be sure that all the procedures described in "Preparation" on page 07-16 are completed.

- The position of the MANUAL AUTO button varies depending on the model. For the actual position of the button on each unit, refer to the operation manual.
- If the MANUAL AUTO button is pressed continuously for 10 seconds or more, the error will be displayed. In this case, release the button or turn off the power.

1. Press and hold the MANUAL AUTO button for 3 seconds.

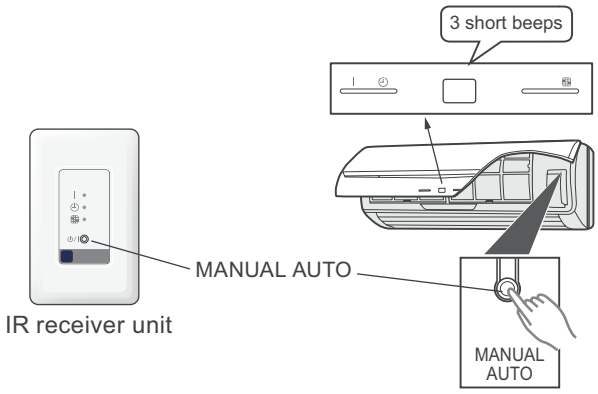

2. While holding down the FAN and the SET TEMP.▲ buttons, press the RESET button. The function setting mode will be activated.

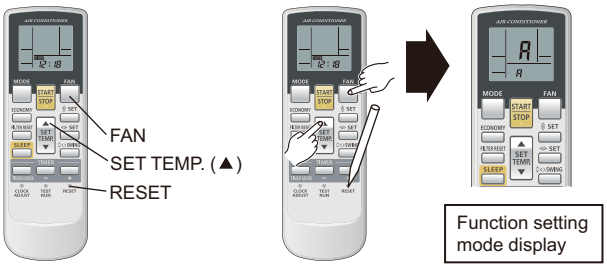

● Selection and confirmation of custom code

1. In function setting mode display, press the SET TEMP.▲ or ▼ button to select the custom code that matches the setting with the indoor unit. By selecting the appropriate custom code, the communication between the indoor unit and the wireless remote controller become possible.

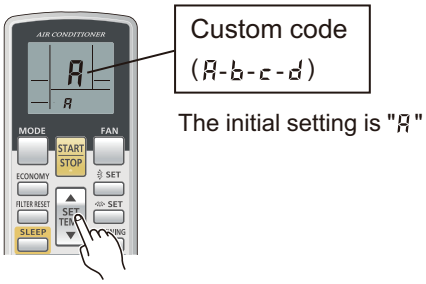

FUNCTION SETTINGS

FUNCTION SETTINGS

2. For confirming the custom code, press the TIMER MODE button to send the code to the indoor unit.

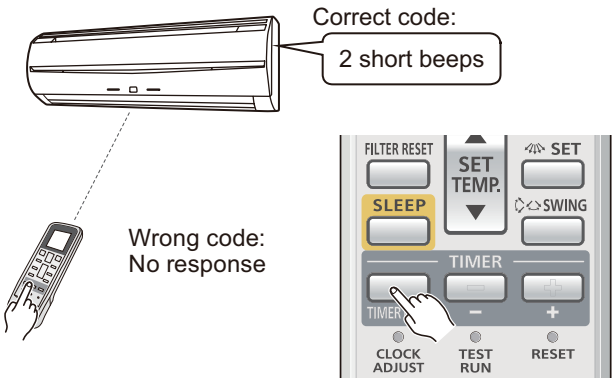

FUNCTION SETTINGS

● Indoor unit address setting

1. In the function setting mode display, press the MODE button to enter the address setting mode.

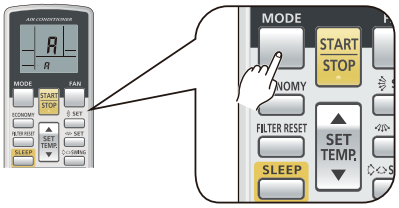

2. Make sure that the function number displayed on the remote controller LCD is “01”. If the number is other than “01”, press the SET TEMP.▲ or ▼ button to change the number.

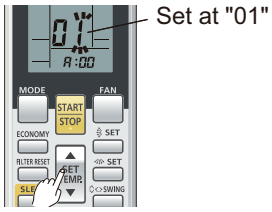

3. Press the FAN button to enter the address data setting mode. The address data will flash when this button is pressed.

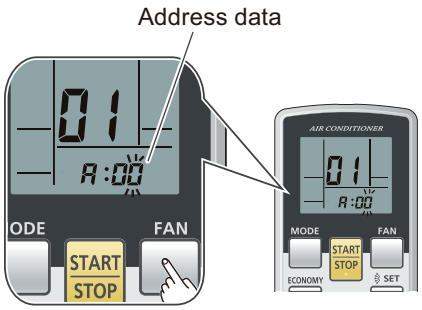

4. Press the SET TEMP.▲ or ▼ button to adjust the address data. The indoor unit address range is between “00” and “63”.
   Each time the MODE button is pressed, it switches between the left digit and the right digit.

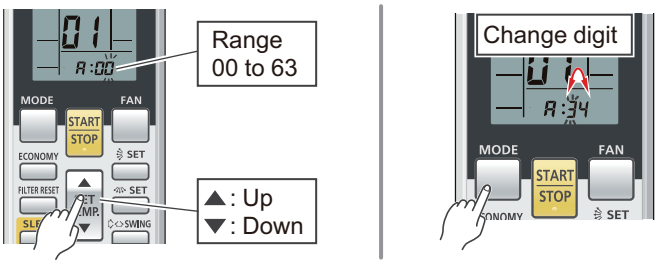

FUNCTION SETTINGS

FUNCTION SETTINGS

5. Send the information by pressing the START/STOP button once. A beeping sound (2 short beeps, 1 long beep, 2 short beeps, and 1 long beep) will be emitted if the command is accepted.

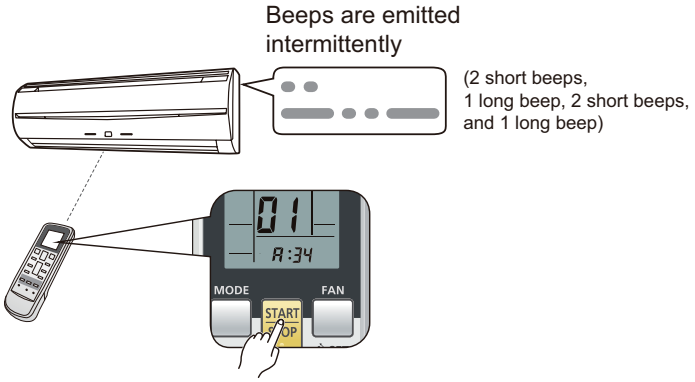

In the following cases, the setting signal will not be accepted correctly and 5 short beeps will be emitted:

- The indoor unit address number is set out of range (64 or more)
- The setting of the rotary switch on the indoor unit PCB is not set to “00”

6. Indoor unit lamps will indicate the indoor unit address data number as follows:

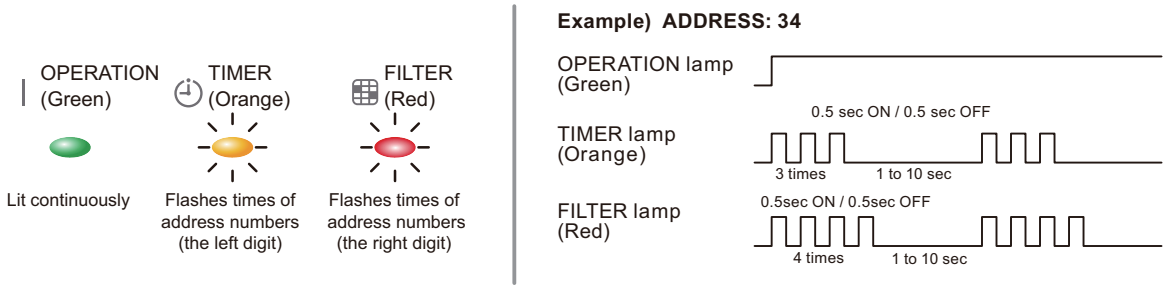

When the address setting is “0”, TIMER lamp and FILTER lamp will not flash.

● Confirmation of address setting

To confirm the address setting is properly configured, press the TIMER set (+) button.

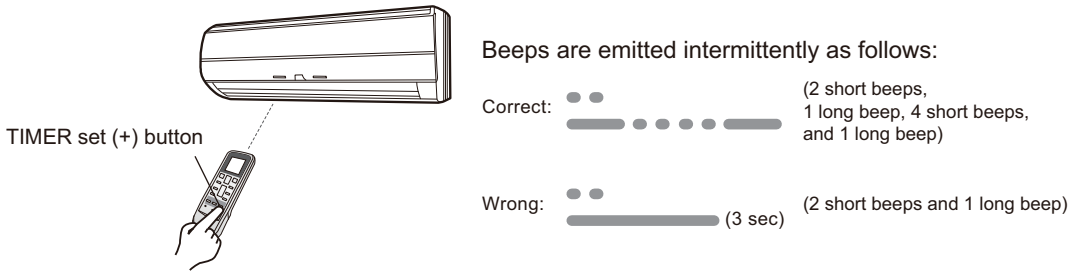

FUNCTION SETTINGS

● Refrigerant circuit address setting

NOTE: Even while an indoor unit address is indicated on the indoor unit LED lamp, the indication will be switched to the refrigerant circuit address if the following operation is performed.

1. Press the FAN button to select the function number.

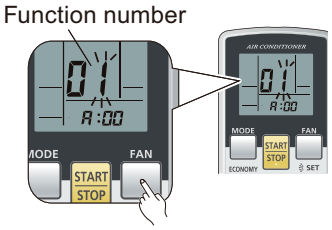

2. Press the SET TEMP.▲ or ▼ button to adjust function number “02”.

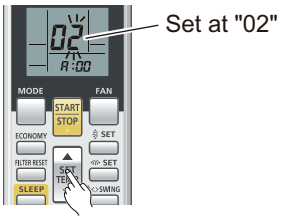

3. Press the FAN button to enter the address data setting mode. The address data will flash when this button is pressed.

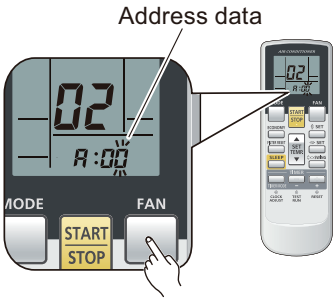

4. Press the SET TEMP.▲ or ▼ button to adjust the address data. The refrigerant circuit address range is between “00” and “99”.
   Each time the MODE button is pressed, it switches between the left digit and the right digit.

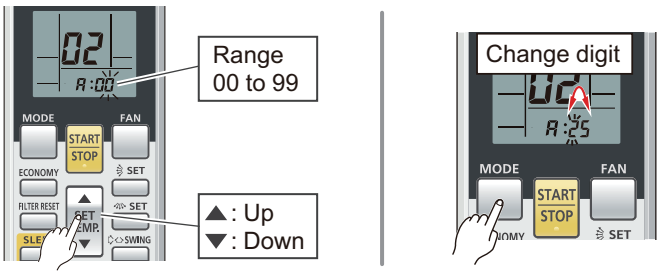

FUNCTION SETTINGS

FUNCTION SETTINGS

5. Send the information by pressing the START/STOP button once. A beeping sound (2 short beeps, 1 long beep, 2 short beeps, and 1 long beep) will be emitted if the command is accepted.

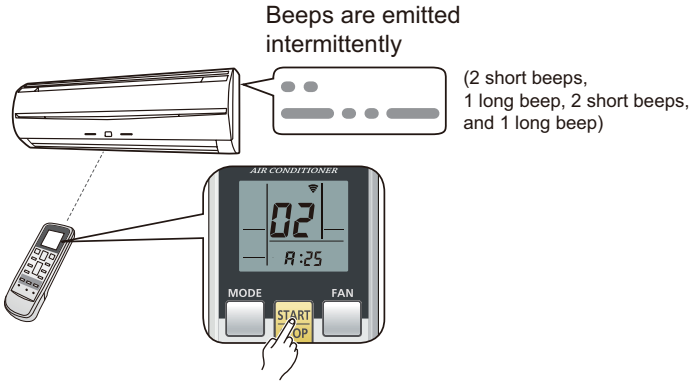

In the following cases, the setting signal will not be accepted correctly and 5 short beeps will be emitted:

- The indoor unit address number is set out of range (64 or more)
- The setting of the rotary switch on the indoor unit PCB is not set to “00”

6. Indoor unit lamps will indicate the refrigerant circuit address data number as follows:

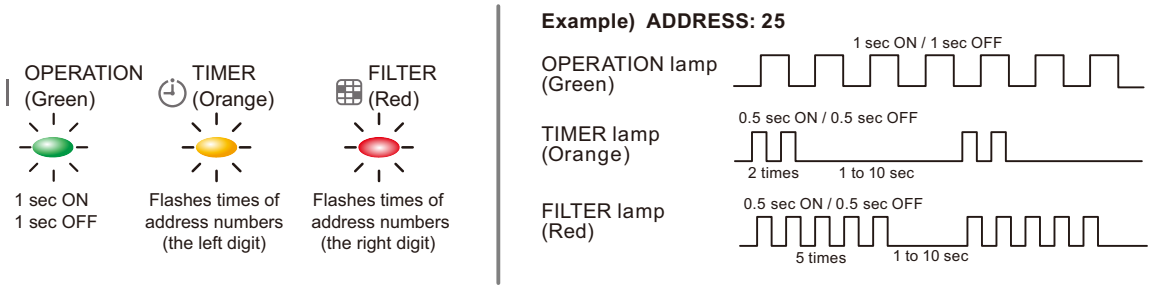

- When the address setting is “0”, TIMER lamp and FILTER lamp will not flash.
- Address indication will be switched automatically from indoor unit address to refrigerant circuit address.

● Confirmation of address setting

To confirm the address setting is properly configured, press the TIMER set (+) button.

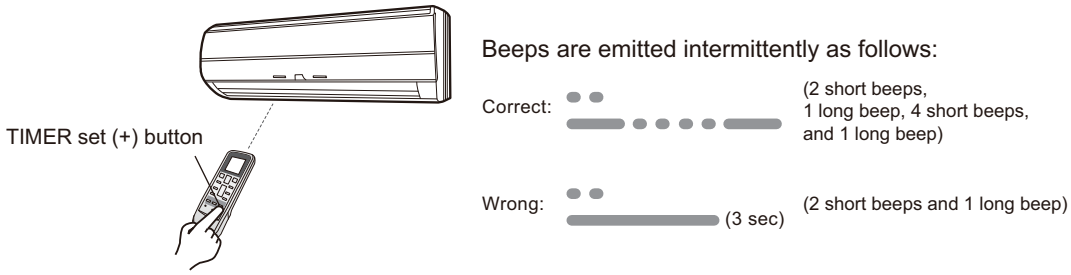

FUNCTION SETTINGS

FUNCTION SETTINGS

● Completion of address setting mode

- The position of the MANUAL AUTO button varies depending on the model. For the actual position of the button on each unit, refer to the operation manual.
- If the MANUAL AUTO button is pressed continuously for 10 seconds or more, the error will be displayed. In this case, release the button or turn off the power.

1. Press and hold the MANUAL AUTO button for 3 seconds. The brightness of each LED lamp is darkening though the content of the display does not change.

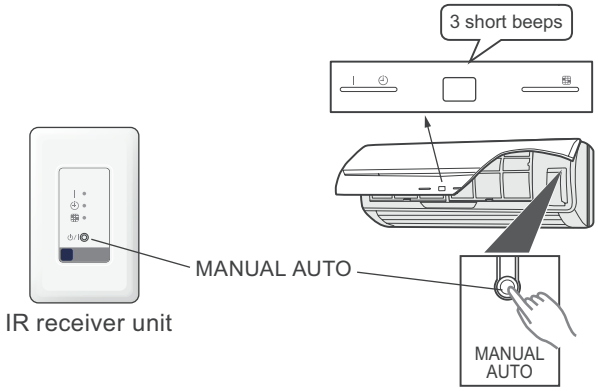

2. Press the RESET button.

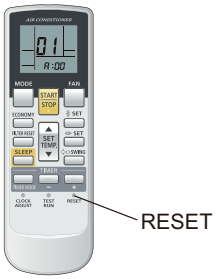

For the custom code setting of b, c, or d, perform the setting after pressing the RESET button.

- After completing the procedure above, no address setting signal is received. If the address setting signal is sent, 5 short beeps will be emitted indicating an error.
- When returning the address setting mode again, press the MANUAL AUTO button for 3 seconds.

FUNCTION SETTINGS

● Reconfirmation of address setting

Press and hold the FAN and the SET TEMP.▲ buttons. Whilst holding these 2 buttons, press the RESET button.

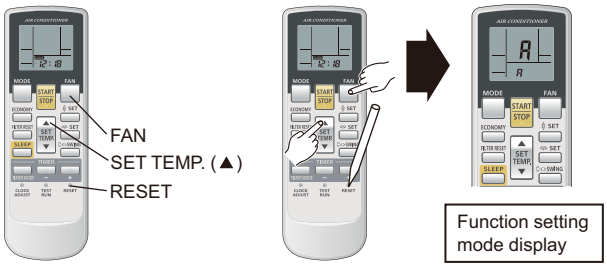

- **Indoor unit address setting**
  1. Make sure that the function number is set to “01” with referring the step 2. in "Indoor unit address setting" on page 07-20.
  2. Press the TIMER set (-) button. Associating indication will be shown on the indoor unit LED lamps.

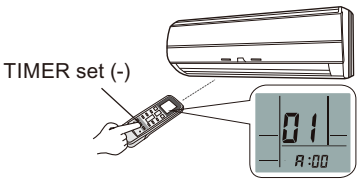

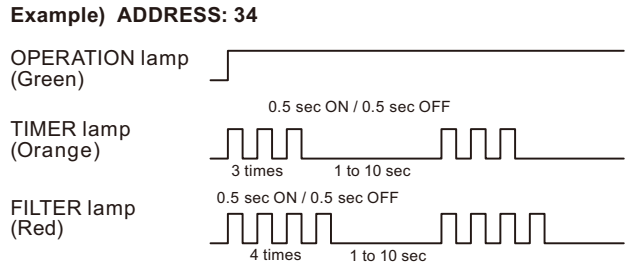

- **Refrigerant circuit address setting**
  1. Make sure that the function number is set to “01” with referring the step 2. in "Refrigerant circuit address setting" on page 07-22.
  2. Press the TIMER set (-) button. Associating indication will be shown on the indoor unit LED lamps.

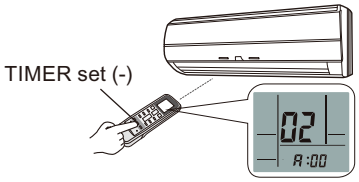

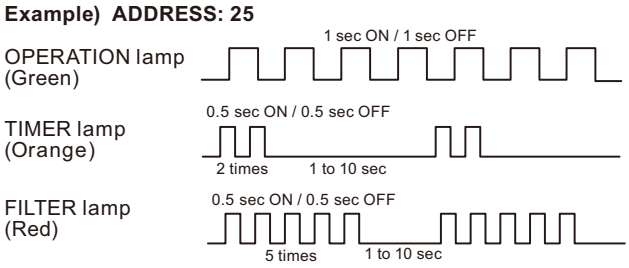

FUNCTION SETTINGS

● Setting up each indoor unit

Setting must be performed on each indoor unit by repeating following procedures:

- "Preparation" on page 07-16
- "Entering function setting mode" on page 07-18
- "Selection and confirmation of custom code" on page 07-18
- "Indoor unit address setting" on page 07-20
- "Refrigerant circuit address setting" on page 07-22
- "Completion of address setting mode" on page 07-24
- "Reconfirmation of address setting" on page 07-25

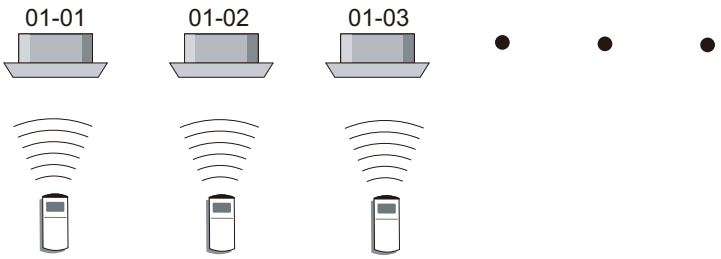

When the custom code is different to "A" (factory setting), only following procedures need to be performed.

- "Preparation" on page 07-16
- "Entering function setting mode" on page 07-18
- "Selection and confirmation of custom code" on page 07-18
- "Completion of address setting mode" on page 07-24
- "Reconfirmation of address setting" on page 07-25

● Resetting the power after setting up all indoor units

NOTES:

- If the reset is not performed, address cannot be read correctly.
- After all the addresses have been set, the circuit breaker needs to be switched off for at least 2 minutes.
  - After the 2 minutes has passed, power can be restored.
  - The set address is stored in the PCB and will remain in memory even when the power of indoor unit is turned off.
    However setting address is effective after disconnecting the power supply and then reconnecting it.
- Record the address set in the indoor unit on a label, and put the label on the unit so it can be used for after-sales service operations.

Address “0” setting will not be indicated on TIMER lamp and FILTER lamp.

Once the RESET button is pressed on the remote controller, the operation mode will be set to the AUTO MODE.

Adjust the operation mode to either cooling or heating before starting the operation of the air conditioner.

NOTE: If custom code other than "A" is set, the remote control must be set accordingly to the indoor unit setting.

FUNCTION SETTINGS

■ Address setting by wired remote controller (UTY-RNK∗)

- Indoor unit addresses and refrigerant circuit addresses can be set up using wired remote controllers.
- This function allows setting the addresses of all indoor units to which a wired remote controller is being connected.
- This function cannot be used to set up remote controller addresses.
  Be sure to set them up using the rotary switches on the PCB of each indoor unit. (Refer to "Manual address setting method" on page 07-9.)
- This function cannot be used on the slave units.
- This device is connectable to 3-wire type remote controller compatible models only. As for the compatible models, refer to "System configuration examples" in Chapter 5. CONTROL SYSTEM on page 05-2.

● Preparation

1. Make sure that all indoor unit address switches (IU AD x10, IU AD x1) and refrigerant circuit address switches (REF AD x10, REF AD x1) on the PCB of each indoor unit are set at 0 (factory setting).
   The layout of the switches differs by the type of the indoor unit. For the details, refer to "Setting on indoor unit PCB" on page 07-74.

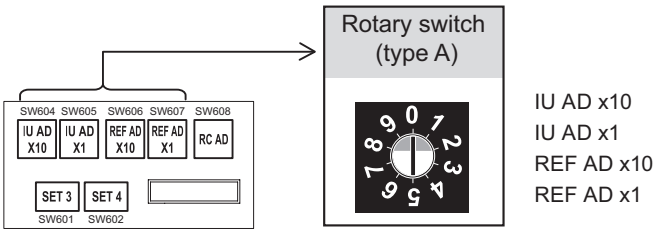

Check the switch position is set at “0”. (Factory setting)

2. If multiple indoor units are connected to a single wired remote controller, set up the remote controller address (RC AD) manually on the indoor units PCBs by referring "Manual address setting method" on page 07-9.

Example: When 4 indoor units are connected

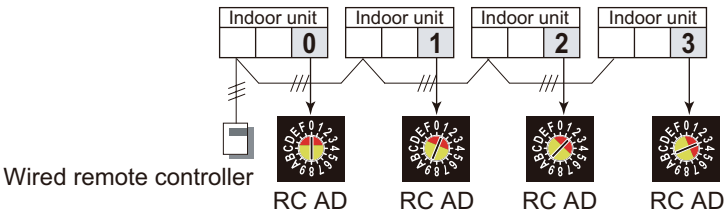

3. Before turning on the power of indoor unit, reconfirm following items:
   - Piping air tight test and vacuuming have been performed firmly.
   - There is no wiring mistake.

4. Turn on the power of indoor units.
   By turning on the power, the indoor units initialize EEV.

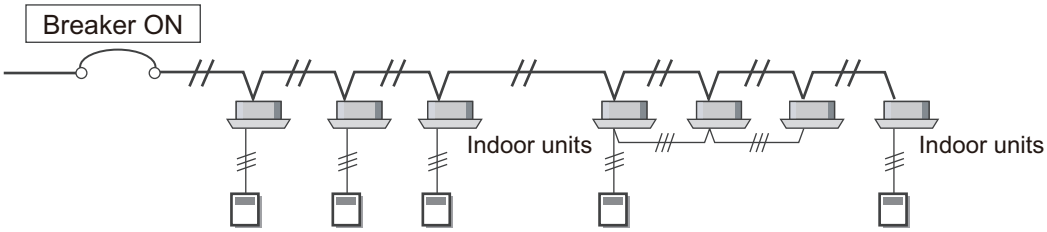

FUNCTION SETTINGS

FUNCTION SETTINGS

● Button name and function

Address code or function indicator on the remote controller is as shown in the figures below.

- For an outline of the address setting, refer to "Address setting" on page 07-4.
- For the details of function number and setting number used for the function setting, refer to "Function details" on page 07-108.
- It does not matter whether the refrigerant circuit address or indoor unit address is set first. (The method shown here sets the indoor unit address first.)
- During address setting mode, indoor unit reject the any operation command from remote controller.

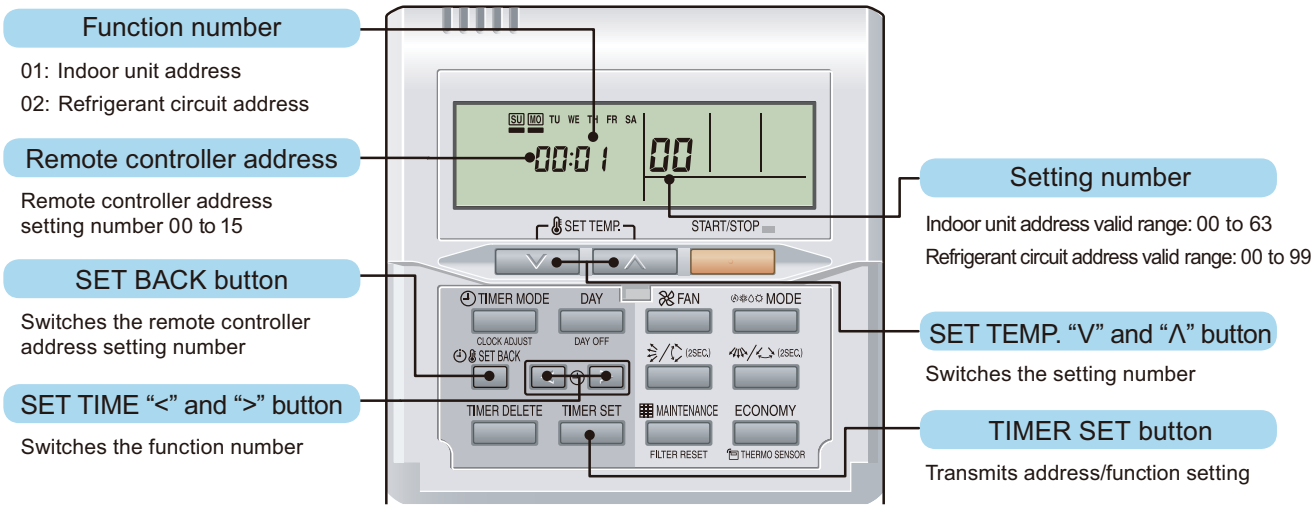

RELATED LINKS

"Indoor unit (setting by UTY-RNK∗)" on page 07-93

● Entering setting mode

Hold down the 3 buttons of SET TEMP. "∨", SET TEMP. "∧", and FAN at the same time for 5 seconds or longer. The setting mode will be activated.

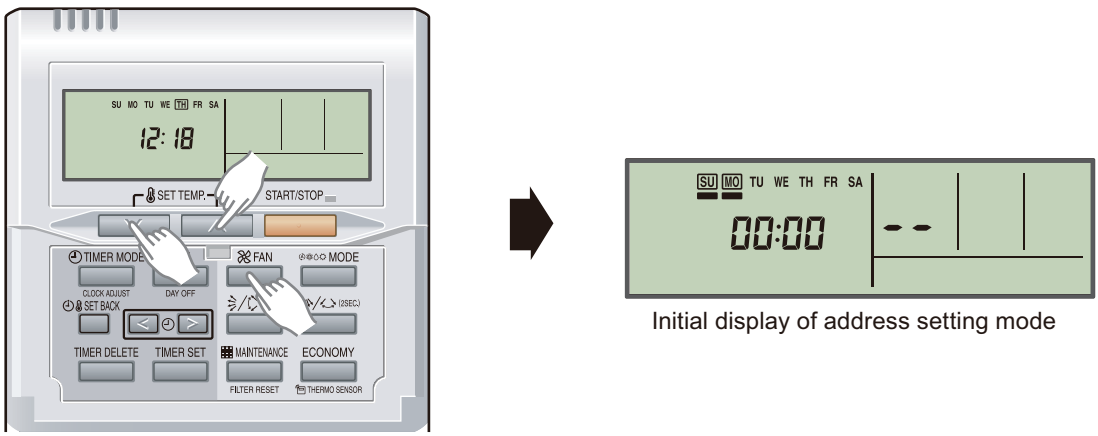

Initial display of address setting mode

FUNCTION SETTINGS

● Indoor unit address setting

1. In the initial display of setting mode, by pressing the SET BACK button, select a remote controller address. (Select the indoor unit you want to operate.)

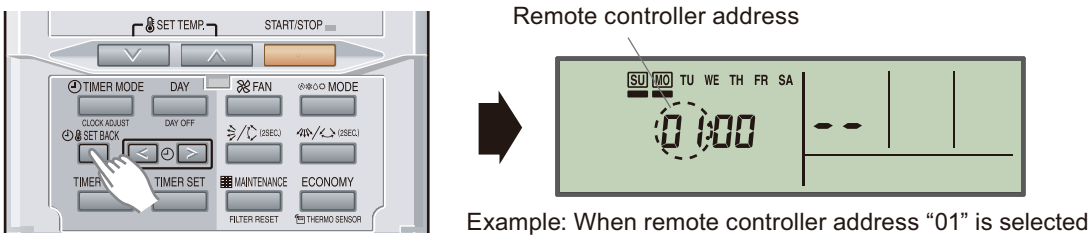

Example: When remote controller address “01” is selected

2. Display the function number “01” by pressing the SET TIME “<” button or SET TIME “>” button.

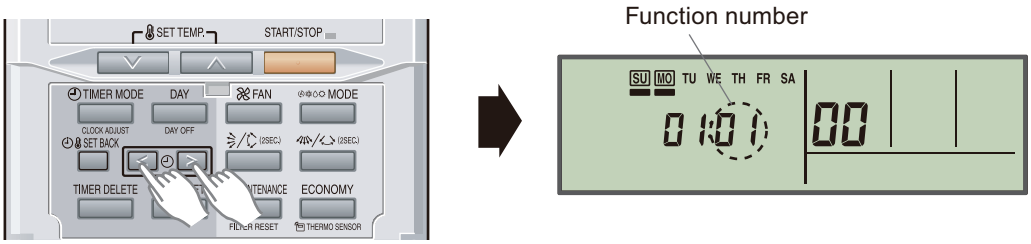

3. Set up the indoor unit address by pressing the SET TEMP. “∨” or the SET TEMP. “∧” button. (The setting range is from “00” to “63”.)

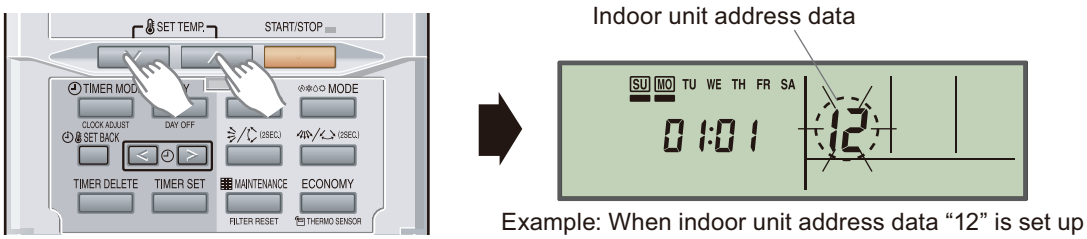

Example: When indoor unit address data “12” is set up

4. Confirm the selected indoor unit address data by pressing the TIMER SET button. The data will be transferred to the indoor unit.

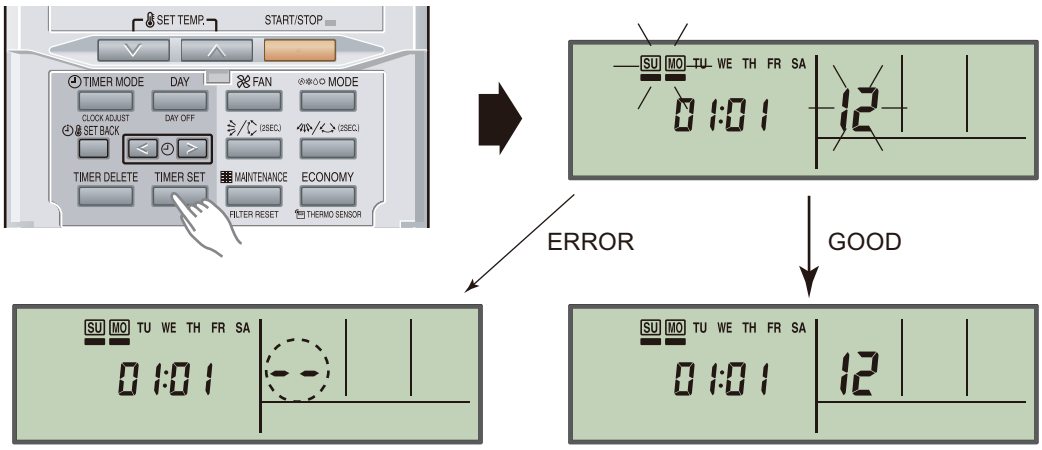

- When the address data is properly set up on the indoor unit, the flashing of the number stops and the set number will be displayed. (GOOD)
- When the address data is not set up correctly, “- -” is displayed. (ERROR) Back to the previous step and set up the indoor unit address data again.

FUNCTION SETTINGS

FUNCTION SETTINGS

● Refrigerant circuit address setting

1. In the initial display of address setting mode, by pressing the SET BACK button, select a remote controller address. (Select the indoor unit you want to operate.)
   If the indoor unit you want to operate has already been selected, skip this step.

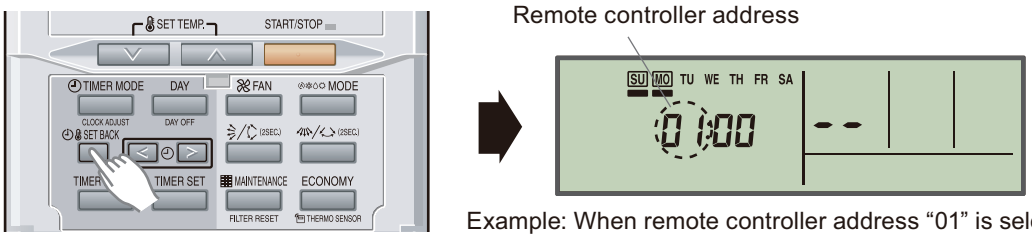

Example: When remote controller address “01” is selected

2. Display the function number “02” by pressing the SET TIME “<” button or SET TIME “>” button.

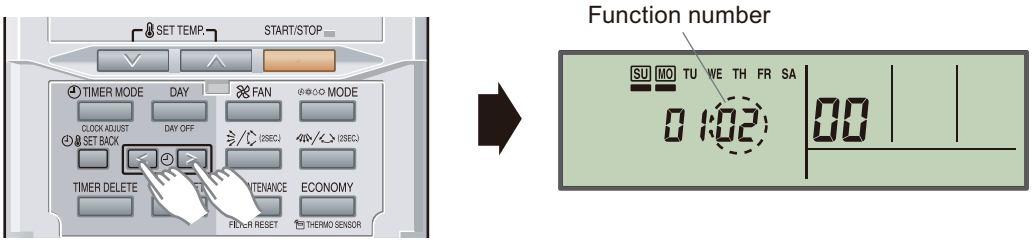

<: Down button
>: Up button

3. Set up the refrigerant circuit address by pressing the SET TEMP. “∨” or the SET TEMP. “∧” button. (The setting range is from “00” to “99”.)

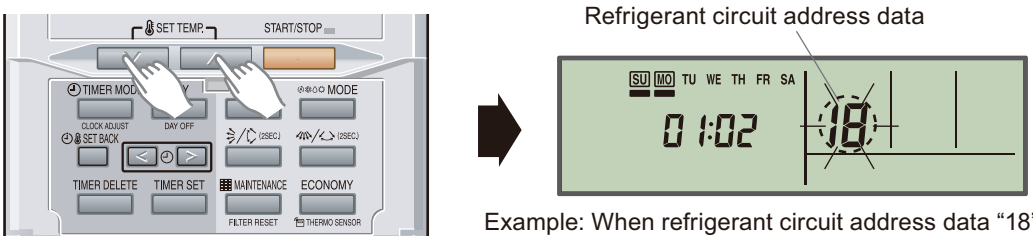

Example: When refrigerant circuit address data “18” is set up

4. Confirm the selected refrigerant circuit address data by pressing the TIMER SET button. The data will be transferred to the indoor unit.

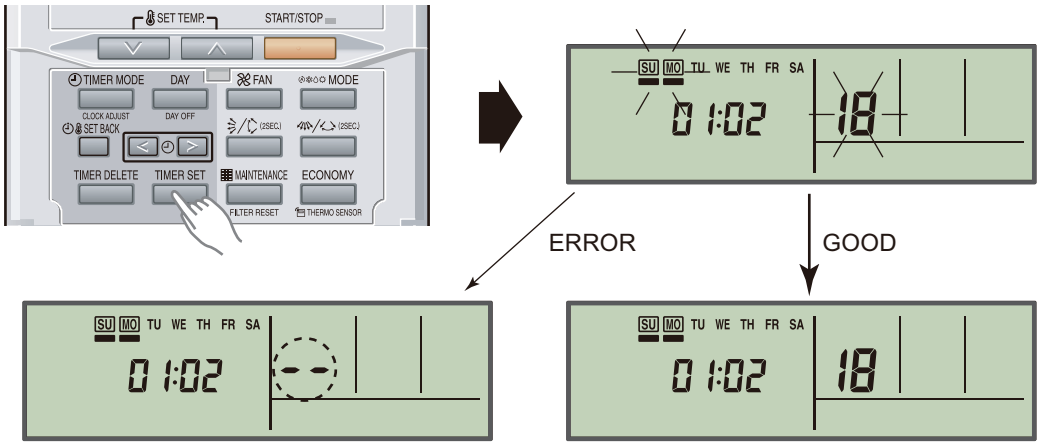

- When the address data is properly set up on the indoor unit, the flashing of the number stops and the set number will be displayed. (GOOD)
- When the address data is not set up correctly, “- -” is displayed. (ERROR) Back to the previous step and set up the indoor unit address data again.

FUNCTION SETTINGS

FUNCTION SETTINGS

● Completion of setting mode

To exit the setting mode and return to the regular display, hold down the 3 buttons of SET TEMP. "∨", SET TEMP. "∧", and FAN at the same time.

If there is no key entry for 60 seconds, even though none of the above buttons is pressed, the setting mode will be cleared automatically.

If the setting mode is automatically cleared during setting, you need to enter the setting mode again by performing the procedure in "Entering setting mode" on page 07-28.

● Setting up each indoor unit

Setting must be performed on each indoor unit requiring address setting by repeating following procedures:

- "Preparation" on page 07-27
- "Entering setting mode" on page 07-28
- "Indoor unit address setting" on page 07-29
- "Refrigerant circuit address setting" on page 07-30
- "Completion of setting mode" on page 07-31

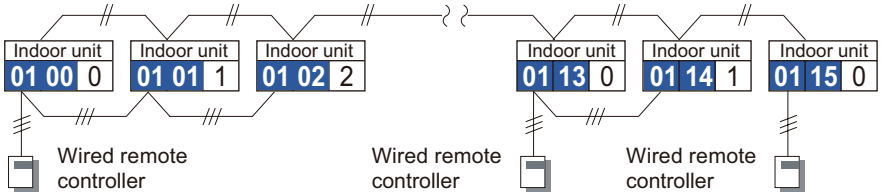

● Resetting the power after setting up all indoor units

NOTES:

- If the reset is not performed, function cannot be read correctly.
- After all the functions have been set, the circuit breaker needs to be switched off for at least 2 minutes.
  - After the 2 minutes has passed, power can be restored.
  - The set function is stored in the PCB and will remain in memory even when the power of indoor unit is turned off.
    However setting function is effective after disconnecting the power supply and then reconnecting it.
- Record the latest configuration of the indoor unit function setting on a label, and put the label on the unit so it can be used for after-sales service operations.

FUNCTION SETTINGS

■ Address setting by simple remote controller (UTY-RSR∗ and UTY-RHR∗)

- Indoor unit addresses and refrigerant circuit addresses can be set up using wired remote controllers.
- This function allows setting the addresses of all indoor units to which a wired remote controller is being connected.
- This function cannot be used to set up remote controller addresses.
  Be sure to set them up using the rotary switches on the PCB of each indoor unit. (Refer to "Manual address setting method" on page 07-9.)
- This function cannot be used on the slave units.
- This function can be set up on both UTY-RSR∗ (with operation mode) and UTY-RHR∗ (without operation mode) types.

● Preparation

1. Make sure that all indoor unit address switches (IU AD x10, IU AD x1) and refrigerant circuit address switches (REF AD x10, REF AD x1) on the PCB of each indoor unit are set at 0 (factory setting).
   The layout of the switches differs by the type of the indoor unit. For the details, refer to "Setting on indoor unit PCB" on page 07-74.

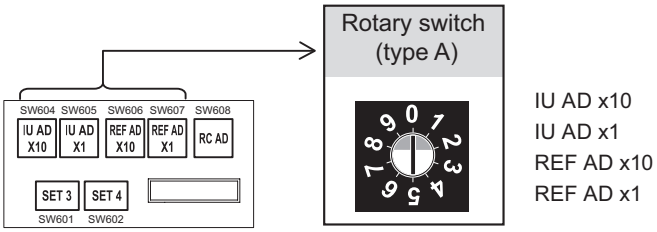

Check the switch position is set at “0”. (Factory setting)

2. If multiple indoor units are connected to a single wired remote controller, set up the remote controller address with “Automatic address setting”.

Example: When 4 indoor units are connected

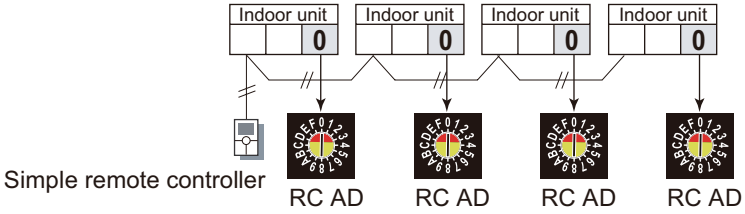

3. Before turning on the power of indoor unit, reconfirm following items:
   - Piping air tight test and vacuuming have been performed firmly.
   - There is no wiring mistake.

4. Turn on the power of indoor units.
   By turning on the power, the indoor units initialize EEV.

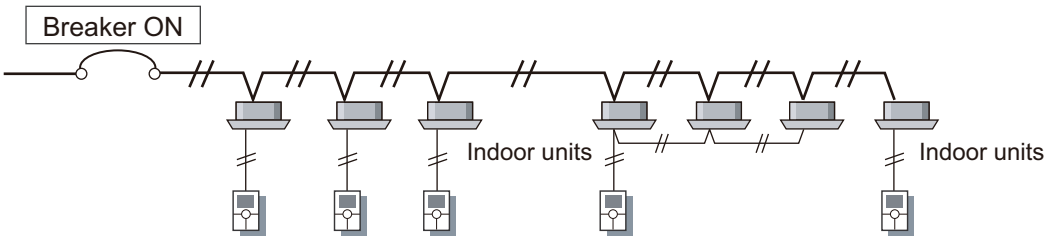

FUNCTION SETTINGS

● Entering setting mode

1. While displaying Monitor Mode screen, press and hold the TEMP. "∧" button and FAN "∨" button at the same time for 2 seconds or longer. Menu 1 screen will be displayed.

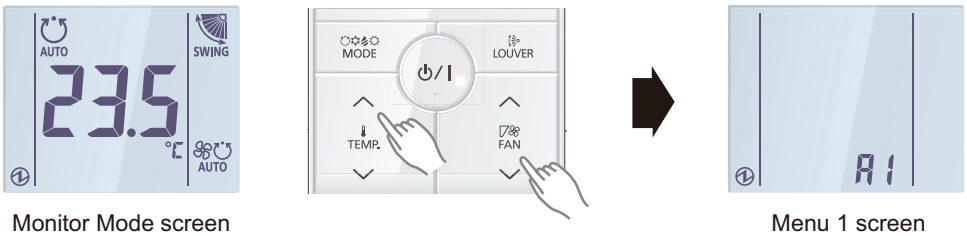

Monitor Mode screen　　Menu 1 screen

2. While displaying the Menu 1 screen, press and hold the FAN "∧" button for 2 seconds or longer. Setting mode selection screen will be displayed.

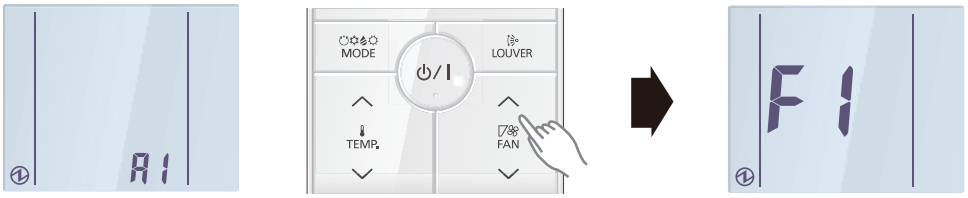

Menu 1 screen　　Setting mode selection screen

3. Press the TEMP. "∧" or TEMP. "∨" button to select "F1" (Menu 2-F1) settings mode or F2 (Menu 2-F2) settings mode.
   - F1: Initial settings mode
   - F2: Maintenance settings mode

4. While displaying the settings mode selection screen, press START/STOP⏻/I button. Setting item selection screen with item number will be displayed.

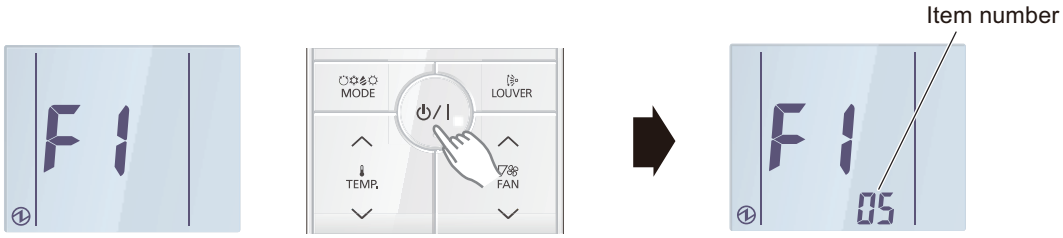

Setting mode selection screen　　Setting item selection screen

5. While displaying the setting item selection screen with item number, press the TEMP. "∧" or TEMP. "∨" button to select the item number "13".

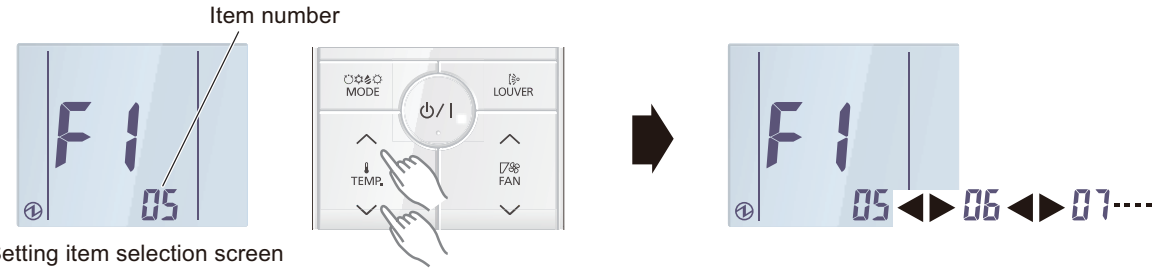

Setting item selection screen

FUNCTION SETTINGS

FUNCTION SETTINGS

6. After adjusting the item number to “13” in Menu 2-F1 settings, press the START/STOP⏻/I button to switch to the function setting screen.

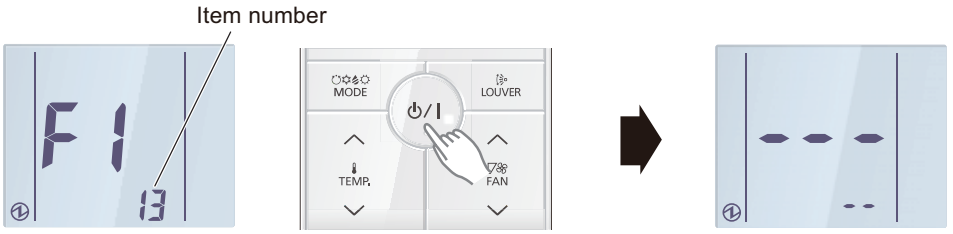

Setting item selection screen

Function setting screen

RELATED LINKS

"Indoor unit address setting" on page 07-34
"Refrigerant circuit address setting" on page 07-36
"Indoor unit function setting" on page 07-97

● Indoor unit address setting

NOTE: Perform this setting on the master remote controller.

1. While displaying the function setting screen, press the TEMP. “∧” or TEMP. “∨” button to select the 2-wire remote controller address.

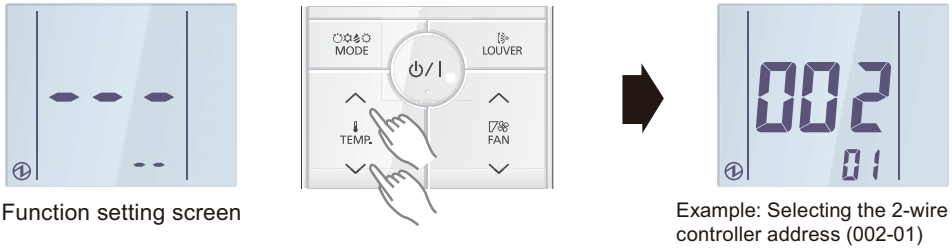

Function setting screen

Example: Selecting the 2-wire remote controller address (002-01)

2. Press the START/STOP⏻/I button to switch to the function number setting.

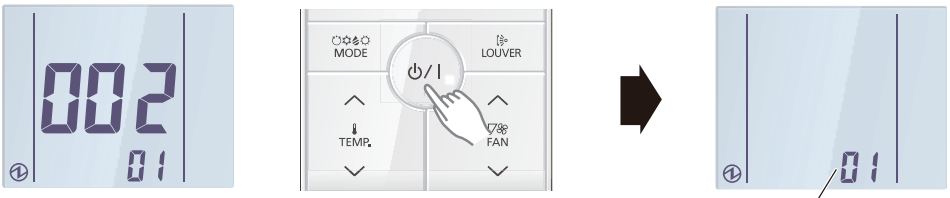

Example: Selecting the 2-wire remote controller address

Function number

3. Press the TEMP. “∧” or TEMP. “∨” button to adjust the function number.

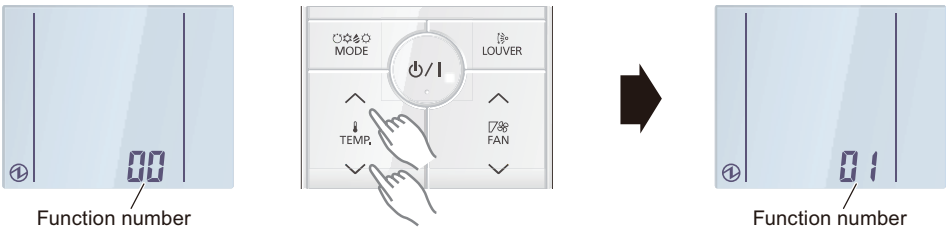

Function number

Function number

FUNCTION SETTINGS

FUNCTION SETTINGS

4. Press the START/STOP⏻/I button to switch to the indoor unit address setting.

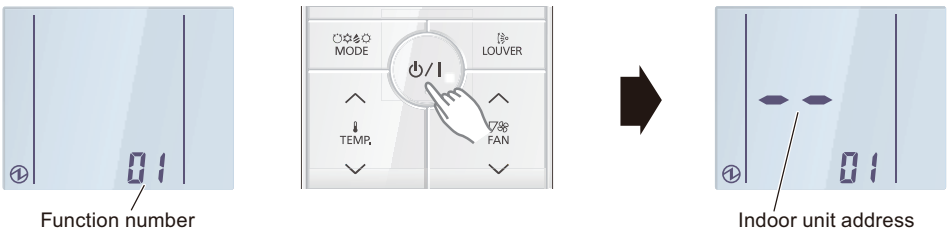

5. Press the TEMP. "∧" or TEMP. "∨" button to adjust the indoor unit address number.

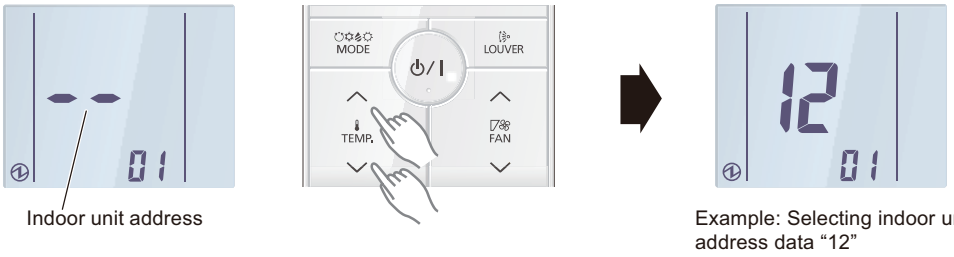

6. Confirm the selected indoor unit address data by pressing the START/STOP⏻/I button. The data will be transferred to the indoor unit.

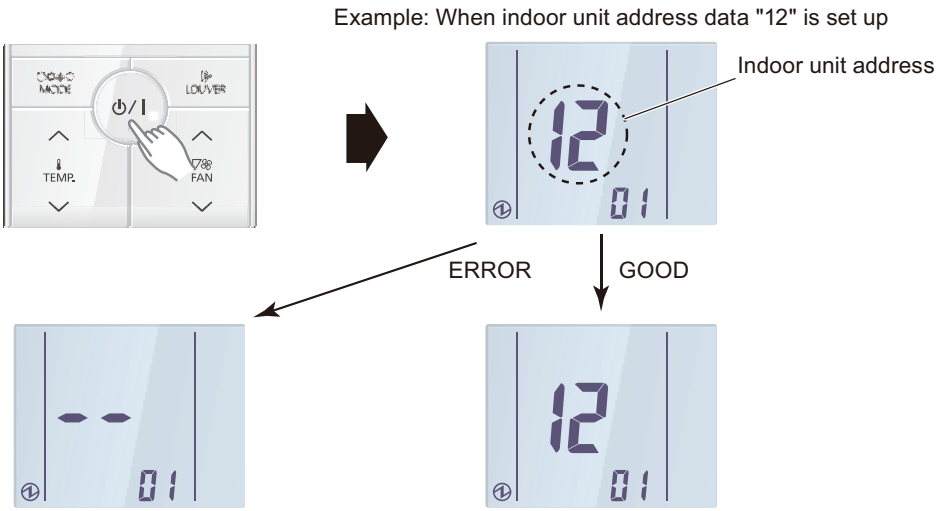

- When the address data is properly set up on the indoor unit, the set number will be displayed. (GOOD)
- When the address data is not set up correctly, "- -" is displayed. (ERROR) Back to the previous step and set up the indoor unit address data again.

7. To return to the 2-wire remote controller address selection screen, press the START/STOP⏻/I button. If setting has been completed, press FAN "∨" button to return to the Menu 2-F1 item selection screen.

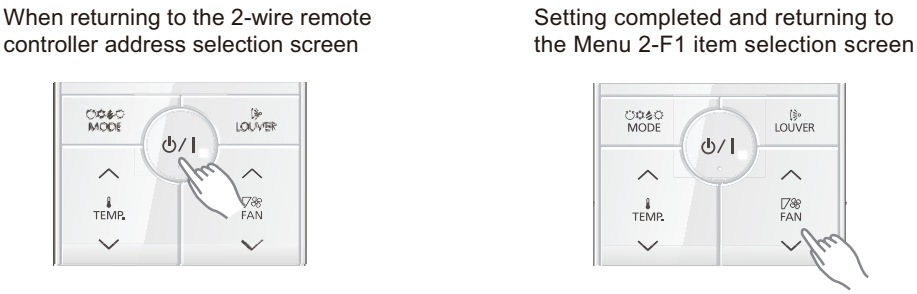

FUNCTION SETTINGS

FUNCTION SETTINGS

● Refrigerant circuit address setting

NOTE: Perform this setting on the master remote controller.

1. While displaying the function setting screen, press the TEMP. "∧" or TEMP. "∨" button to select the 2-wire remote controller address.

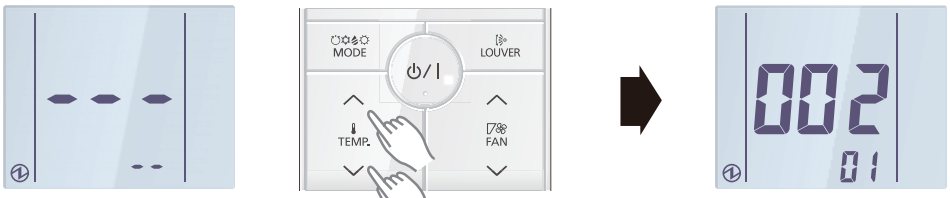

Function setting screen

Example: Selecting the 2-wire remote controller address (002-01)

2. Press the START/STOP⏻/I button to switch to the function number setting.

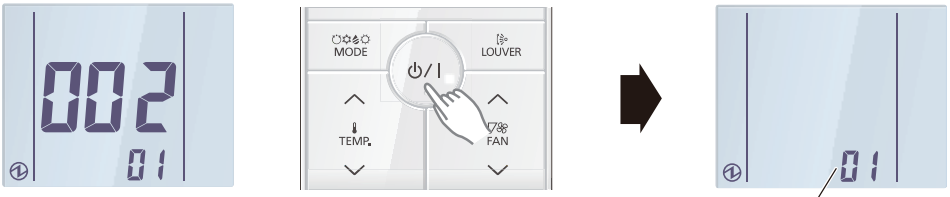

Example: Selecting the 2-wire remote controller address

Function number

3. Press the TEMP. "∧" or TEMP. "∨" button to adjust the function number.

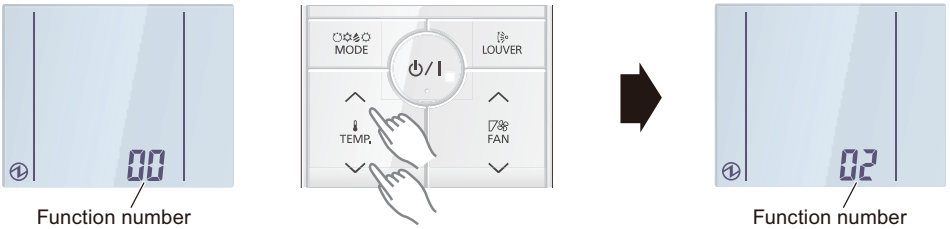

Function number

Function number

4. Press the START/STOP⏻/I button to switch to the refrigerant circuit address setting.

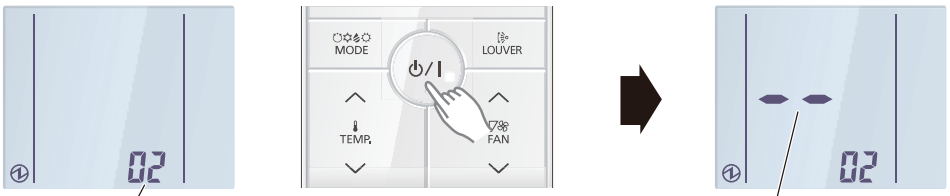

Function number

Refrigerant circuit address

5. Press the TEMP. "∧" or TEMP. "∨" button to adjust the refrigerant circuit address number.

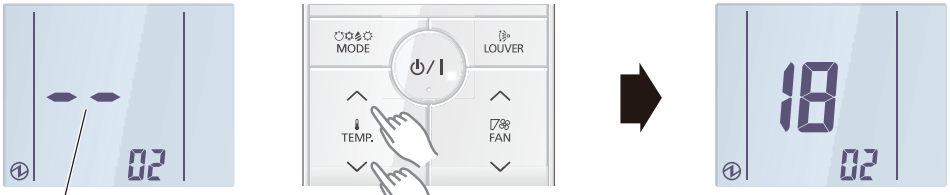

Refrigerant circuit address

Example: Selecting refrigerant circuit address data "18"

FUNCTION SETTINGS

FUNCTION SETTINGS

6. Confirm the selected refrigerant circuit address data by pressing the START/STOP⏻/I button. The data will be transferred to the indoor unit.

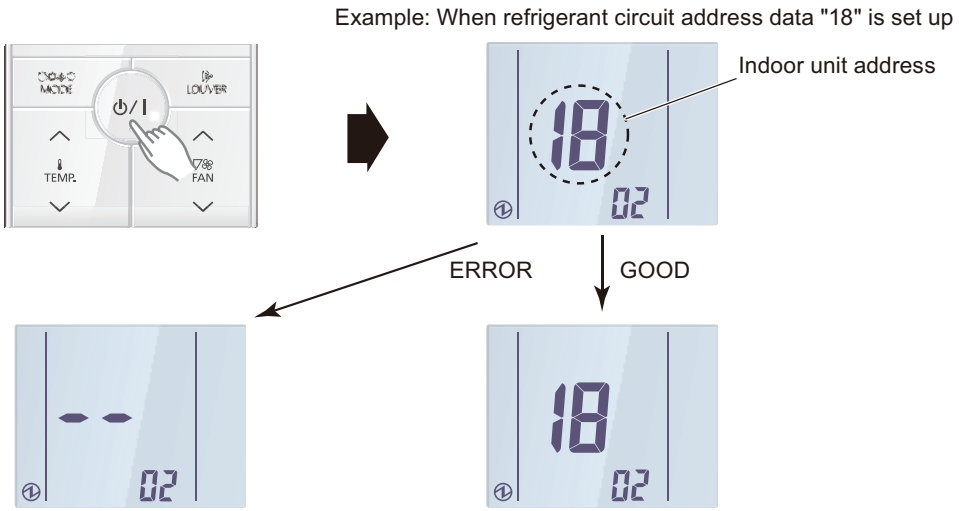

- When the address data is properly set up on the indoor unit, the set number will be displayed. (GOOD)
- When the address data is not set up correctly, “- -” is displayed. (ERROR) Back to the previous step and set up the indoor unit address data again.

7. To return to the 2-wire remote controller address selection screen, press the START/STOP⏻/I button. If setting has been completed, press FAN “∨” button to return to the Menu 2-F1 item selection screen.

When returning to the 2-wire remote controller address selection screen

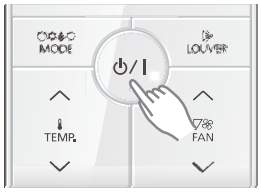

Setting completed and returning to the Menu 2-F1 item selection screen

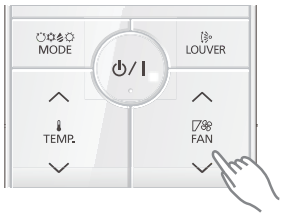

● Completion of setting mode

1. To exit the setting mode and return to the Menu 1 item selection screen, press and hold the FAN “∧” button for 2 seconds or longer.
2. To return to the Monitor Mode screen, press and hold the TEMP. “∧” button and FAN “∨” button at the same time for 2 seconds or longer.

FUNCTION SETTINGS

● Setting up each indoor unit

Setting must be performed on each indoor unit requiring address setting by repeating following procedures:

- "Preparation" on page 07-32
- "Entering setting mode" on page 07-33
- "Indoor unit address setting" on page 07-34
- "Refrigerant circuit address setting" on page 07-36

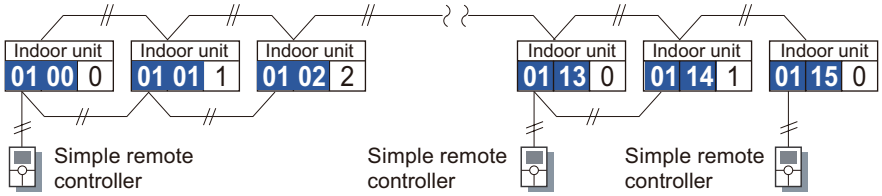

● Resetting the power after setting up all indoor units

NOTES:

- If the reset is not performed, function cannot be read correctly.
- After all the functions have been set, the circuit breaker needs to be switched off for at least 2 minutes.
  - After the 2 minutes has passed, power can be restored.
  - The set function is stored in the PCB and will remain in memory even when the power of indoor unit is turned off.
    However setting function is effective after disconnecting the power supply and then reconnecting it.
- Record the latest configuration of the indoor unit function setting on a label, and put the label on the unit so it can be used for after-sales service operations.

FUNCTION SETTINGS

■ Address setting by simple remote controller (UTY-RSK∗ and UTY-RHK∗)

- Indoor unit addresses and refrigerant circuit addresses can be set up using wired remote controllers.
- This function allows setting the addresses of all indoor units to which a wired remote controller is being connected.
- This function cannot be used to set up remote controller addresses.
  Be sure to set them up using the rotary switches on the PCB of each indoor unit. (Refer to "Manual address setting method" on page 07-9.)
- This function cannot be used on the slave units.
- This function can be set up on both UTY-RSK∗ (with operation mode) and UTY-RHK∗ (without operation mode) types.

● Preparation

1. Make sure that all indoor unit address switches (IU AD x10, IU AD x1) and refrigerant circuit address switches (REF AD x10, REF AD x1) on the PCB of each indoor unit are set at 0 (factory setting).
   The layout of the switches differs by the type of the indoor unit. For the details, refer to "Setting on indoor unit PCB" on page 07-74.

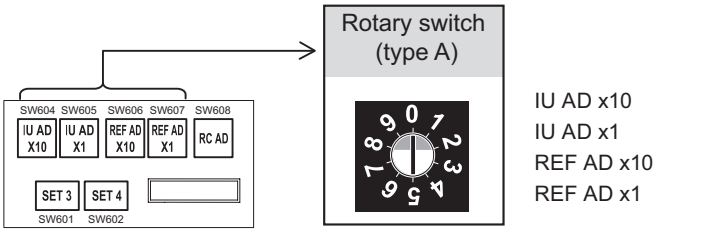

Check the switch position is set at “0”. (Factory setting)

2. If multiple indoor units are connected to a single simple remote controller, set up the remote controller address (RC AD) manually on the indoor units PCBs by referring "Manual address setting method" on page 07-9.

Example: When 4 indoor units are connected

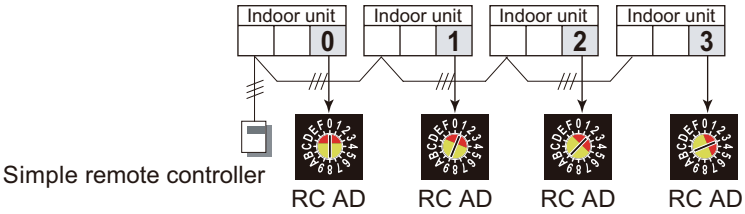

3. Before turning on the power of indoor unit, reconfirm following items:
   - Piping air tight test and vacuuming have been performed firmly.
   - There is no wiring mistake.

4. Turn on the power of indoor units.
   By turning on the power, the indoor units initialize EEV.

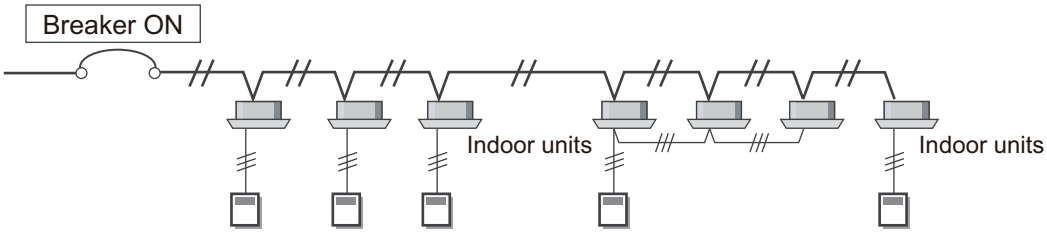

FUNCTION SETTINGS

FUNCTION SETTINGS

● Button name and function

Address code or function indicator on the remote controller is as shown in the figures below.

- For an outline of the address setting, refer to "Address setting" on page 07-4.
- For the details of function number and setting number used for the function setting, refer to "Function details" on page 07-108.
- It does not matter whether the refrigerant circuit address or indoor unit address is set first. (The method shown here sets the indoor unit address first.)
- During address setting mode, indoor unit reject the any operation command from remote controller.

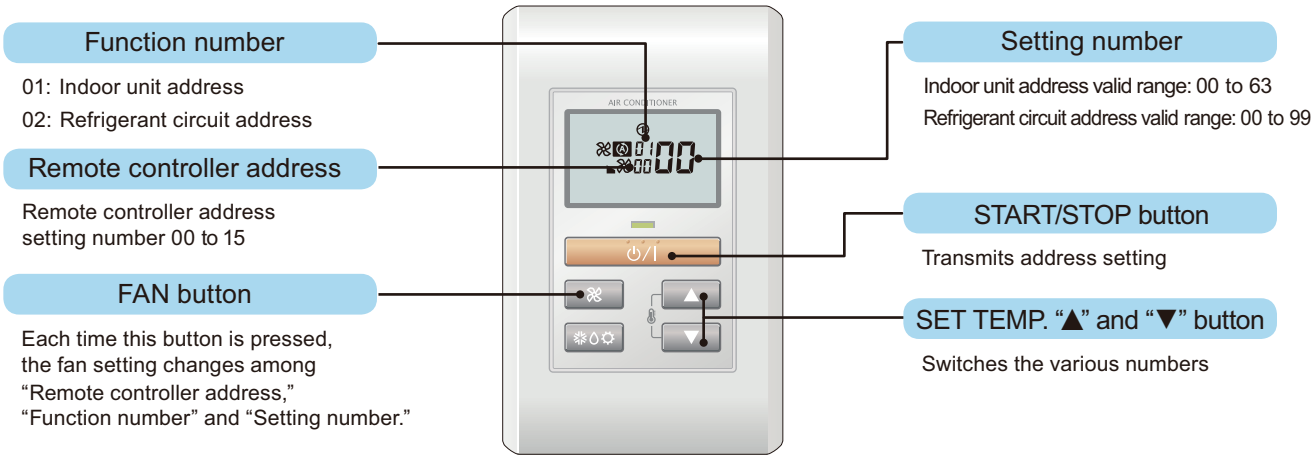

UTY-RSK* (With operation mode)

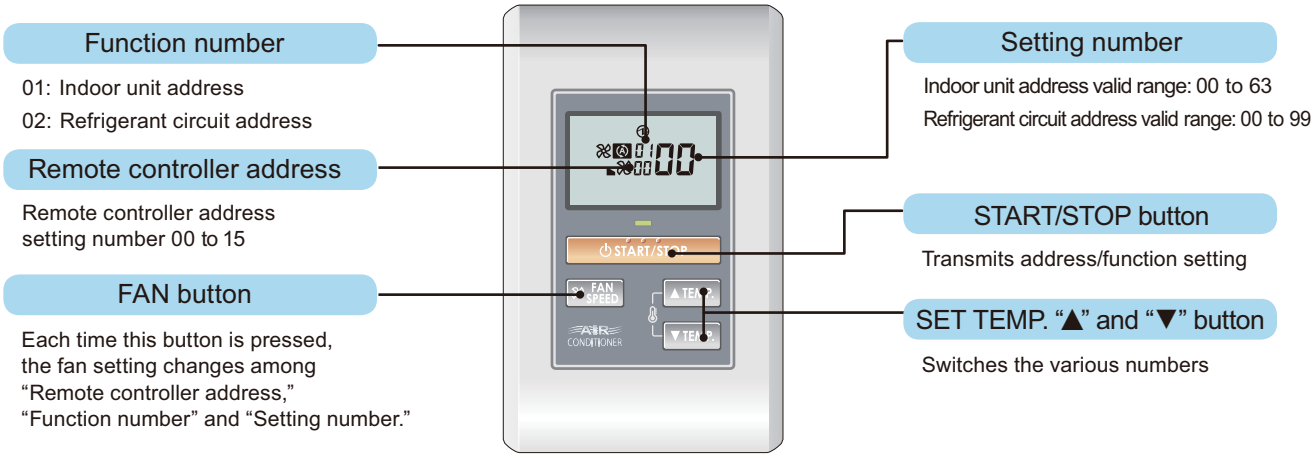

UTY-RHK* (Without operation mode)

FUNCTION SETTINGS

RELATED LINKS

"Indoor unit (setting by UTY-RSK∗, UTY-RHK∗)" on page 07-99

● Entering setting mode

Hold down the 3 buttons of SET TEMP. "▲", SET TEMP. "▼", and FAN at the same time for 5 seconds or longer. The setting mode will be activated.

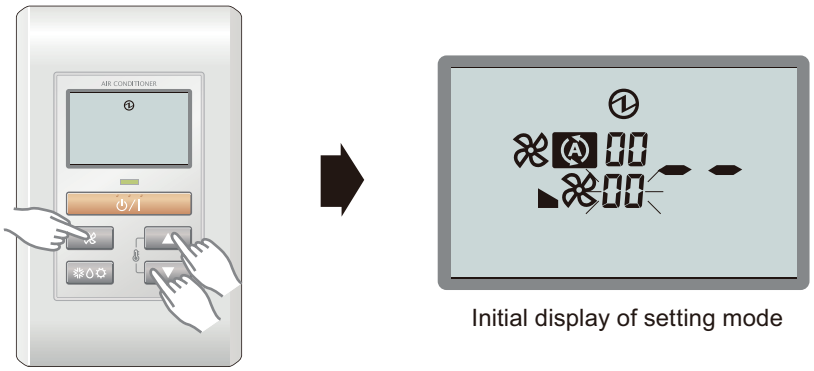

Initial display of setting mode

● Indoor unit address setting

1. In initial display of the setting mode, by pressing SET TEMP. "▲" button or SET TEMP. "▼" button, select a remote controller address. (Select the indoor unit you want to operate.)

Initial display of address setting mode

Example: When remote controller address "01" is selected

2. Press the FAN button. "Function number" indicator flashes.

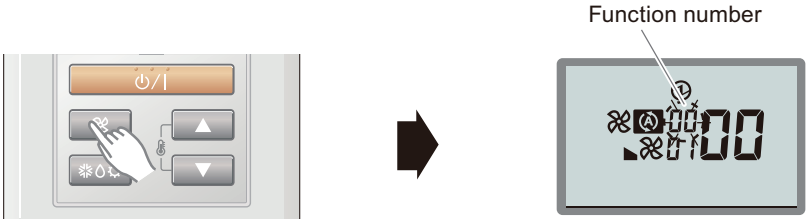

3. Display the function number "01" by pressing SET TEMP. "▲" button or SET TEMP. "▼" button.

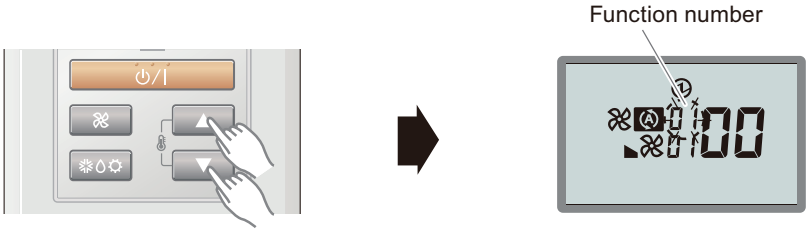

4. Press the FAN button. "Setting number" indicator flashes.

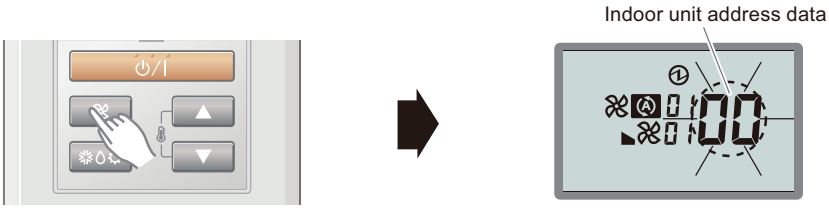

5. Set up the indoor unit address data by pressing SET TEMP. "▲" button or SET TEMP. "▼" button. (Setting range is from "00" to "63".)

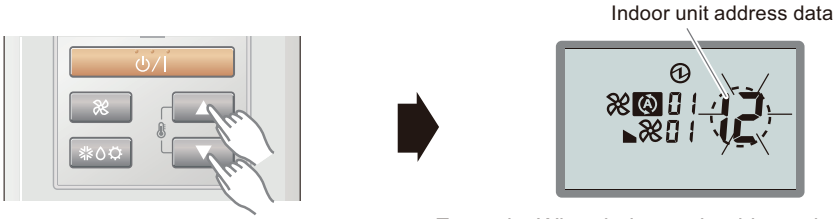

Example: When indoor unit address data "12" is set

FUNCTION SETTINGS

FUNCTION SETTINGS

6. Confirm the selected indoor unit address data by pressing the START/STOP⏻/I button. The data will be transferred to the indoor unit.

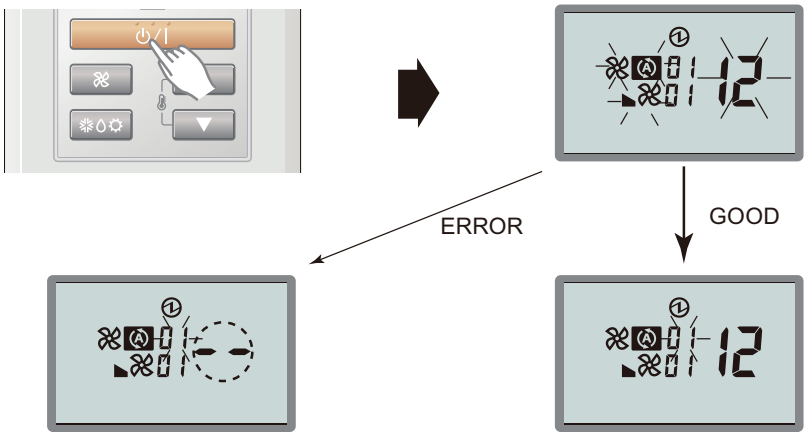

- When the address data is properly set up on the indoor unit, the set number will be displayed. (GOOD)
- When the address data is not set up correctly, "- -" is displayed. (ERROR) Back to the previous step and set up the indoor unit address data again.

● Refrigerant circuit address setting

NOTE: Perform this setting on the master remote controller.

1. In initial display of the address setting mode, by pressing SET TEMP. "▲" button or SET TEMP. "▼" button, select a remote controller address. (Select the indoor unit you want to operate.)
   If the indoor unit you want to operate has already been selected, skip this step.

Initial display of address setting mode

Example: When remote controller address "01" is selected

2. Press the FAN button. "Function number" indicator flashes.

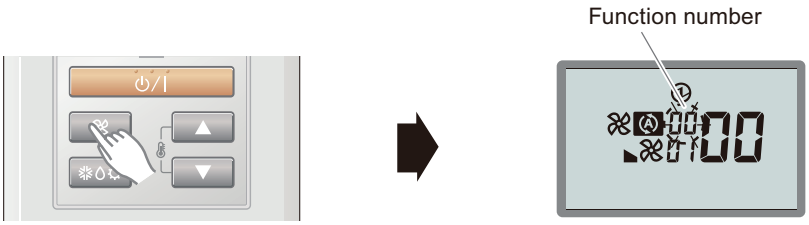

3. Display the function number "02" by pressing SET TEMP. "▲" button or SET TEMP. "▼" button.

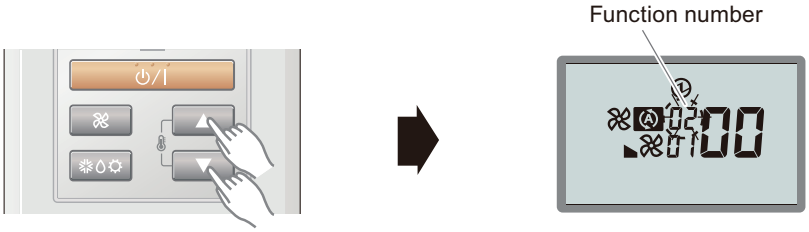

FUNCTION SETTINGS

4. Press the FAN button. “Setting number” indicator flashes.

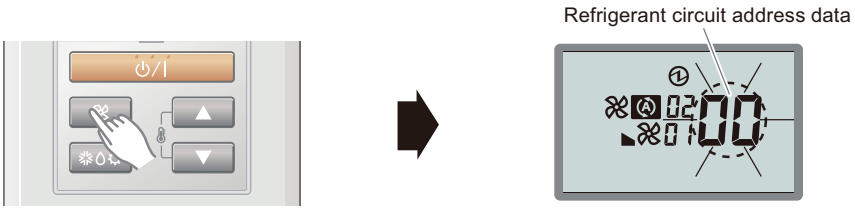

5. Set up the refrigerant circuit address data by pressing SET TEMP. “▲” button or SET TEMP. “▼” button. (Setting range is from “00” to “99”.)

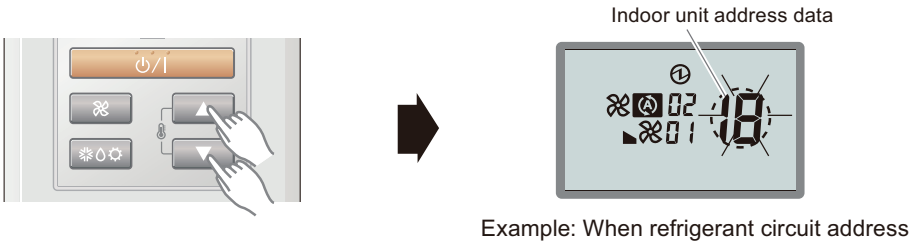

Example: When refrigerant circuit address data “12” is set

6. Confirm the selected refrigerant circuit address data by pressing the START/STOP⏻/I button. The data will be transferred to the indoor unit.

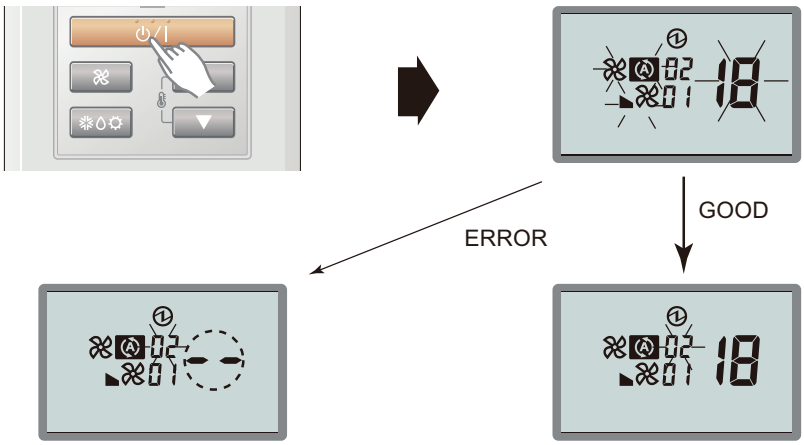

- When the address data is properly set up on the indoor unit, the set number will be displayed. (GOOD)
- When the address data is not set up correctly, “- -” is displayed. (ERROR) Back to the previous step and set up the indoor unit address data again.

FUNCTION SETTINGS

● Completion of setting mode

To exit the setting mode and return to the regular display, hold down the 3 buttons of SET TEMP. "▲", SET TEMP. "▼", and FAN at the same time for 5 seconds or longer.

If there is no key entry for 60 seconds, even though none of the above buttons is pressed, the setting mode will be cleared automatically.

If the setting mode is automatically cleared during setting, you need to enter the setting mode again by performing the procedure in "Entering setting mode" on page 07-40.

● Setting up each indoor unit

Setting must be performed on each indoor unit requiring address setting by repeating following procedures:

- "Preparation" on page 07-39
- "Entering setting mode" on page 07-40
- "Indoor unit address setting" on page 07-41
- "Refrigerant circuit address setting" on page 07-42

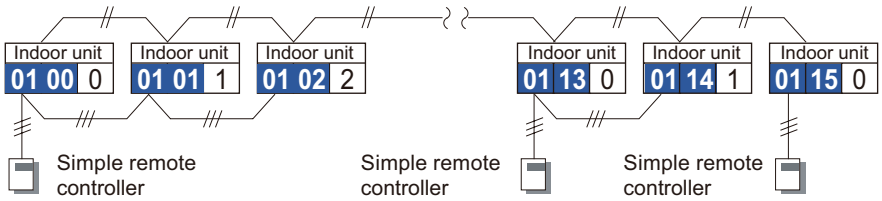

● Resetting the power after setting up all indoor units

NOTES:

- If the reset is not performed, function cannot be read correctly.
- After all the functions have been set, the circuit breaker needs to be switched off for at least 2 minutes.
  - After the 2 minutes has passed, power can be restored.
  - The set function is stored in the PCB and will remain in memory even when the power of indoor unit is turned off.
    However setting function is effective after disconnecting the power supply and then reconnecting it.
- Record the latest configuration of the indoor unit function setting on a label, and put the label on the unit so it can be used for after-sales service operations.

FUNCTION SETTINGS

■ Address setting by wired remote controller (Touch panel) (UTY-RNR∗Z∗)

- Indoor unit addresses and refrigerant circuit addresses can be set up using wired remote controllers.
- This function allows setting the addresses of all indoor units to which a wired remote controller is being connected.
- This function cannot be used to set up remote controller addresses.
  Be sure to set them up using the rotary switches on the PCB of each indoor unit. (Refer to "Manual address setting method" on page 07-9.)
- This function cannot be used on the slave units.

● Preparation

1. Make sure that all indoor unit address switches (IU AD x10, IU AD x1) and refrigerant circuit address switches (REF AD x10, REF AD x1) on the PCB of each indoor unit are set at 0 (factory setting).
   The layout of the switches differs by the type of the indoor unit. For the details, refer to "Setting on indoor unit PCB" on page 07-74.

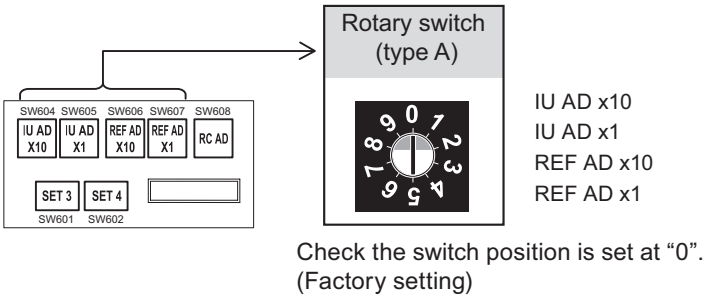

2. If multiple indoor units are connected to a single wired remote controller, set up the remote controller address with “Automatic address setting”.

Example: When 4 indoor units are connected

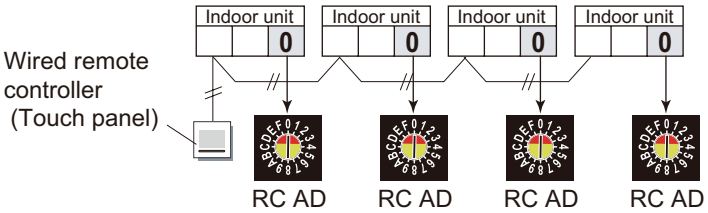

3. Before turning on the power of indoor unit, reconfirm following items:
   - Piping air tight test and vacuuming have been performed firmly.
   - There is no wiring mistake.

4. Turn on the power of indoor units.
   By turning on the power, the indoor units initialize EEV.

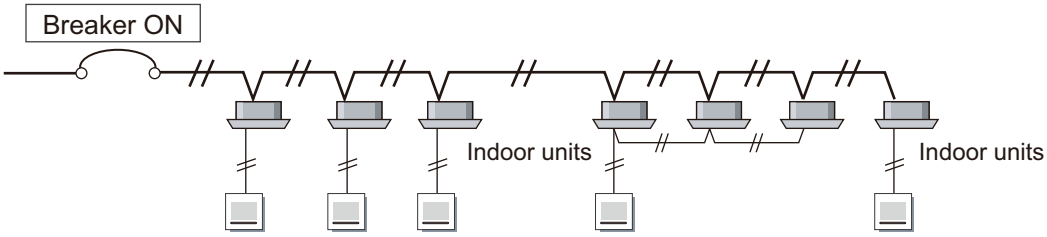

FUNCTION SETTINGS

FUNCTION SETTINGS

● Entering setting mode

When “Function Setting” on the Maintenance screen is touched, Installer Password Verification screen is displayed.
Enter the Installer Password, and touch “OK”. Function Setting screen is displayed.

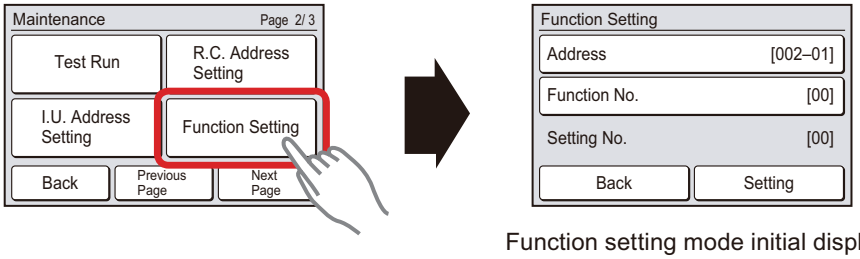

Function setting mode initial display

● Indoor unit address setting

1. Touch “Address” on the Function Setting screen.

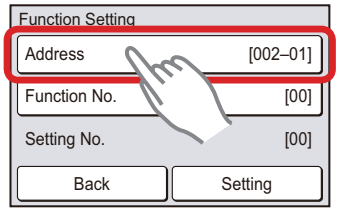

2. Address screen is displayed. Select the address of the indoor unit whose function number is to be set by touching “▲” or “▼”.

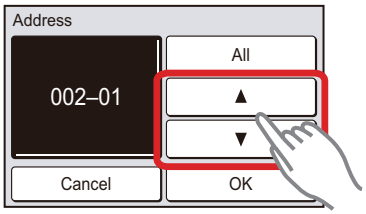

When “OK” is touched, the display returns to the Function Setting screen.

3. Touch “Function No.” on the Function Setting screen.

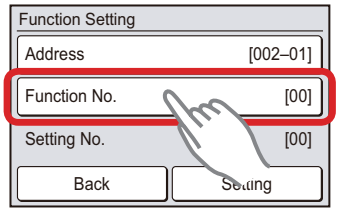

4. Function No. screen is displayed. Set the Function No. “01” by touching “▲” or “▼”.

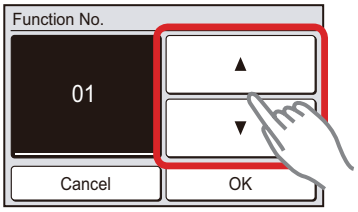

When “OK” is touched, the display returns to the Function Setting screen.

FUNCTION SETTINGS

5. Touch “Setting” on the Function Setting screen.

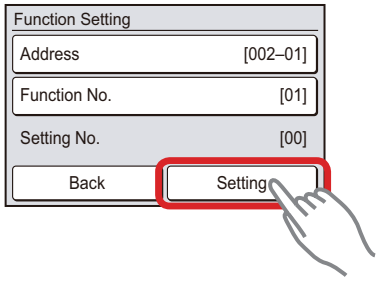

6. Setting screen of “Setting No.” is displayed. Set the Setting No. by touching “▲” or “▼”. (Setting range is from “00” to “63”.)

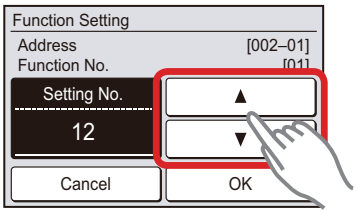

Example: When indoor unit address data "12" is set

When “OK” is touched, the Function Setting verification screen is displayed.

7. Touch “Yes” on the verification screen.

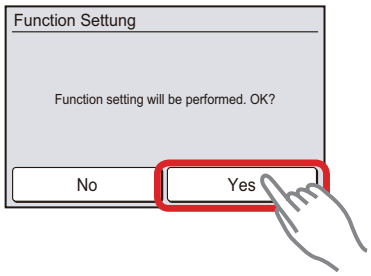

After the Setting screen is displayed, the display returns to the Function Setting screen.

● Refrigerant circuit address setting

1. Touch “Address” on the Function Setting screen.

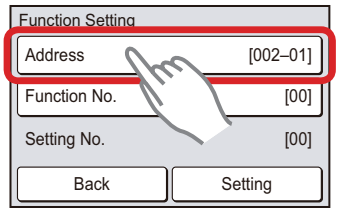

2. Address screen is displayed. Select the address of the indoor unit whose function number is to be set by touching “▲” or “▼”. When setting at all the indoor units, touch “All”.

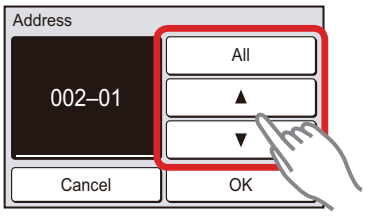

When “OK” is touched, the display returns to the Function Setting screen.

FUNCTION SETTINGS

3. Touch “Function No.” on the Function Setting screen.

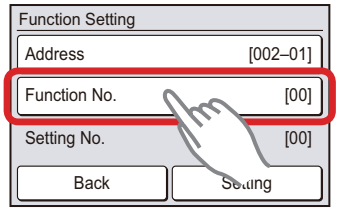

4. Function No. screen is displayed. Set the Function No. “02” by touching “▲” or “▼”.

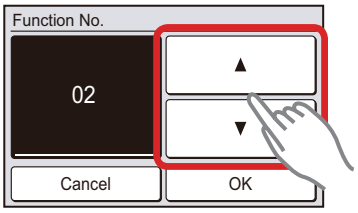

When “OK” is touched, the display returns to the Function Setting screen.

5. Touch “Setting” on the Function Setting screen.

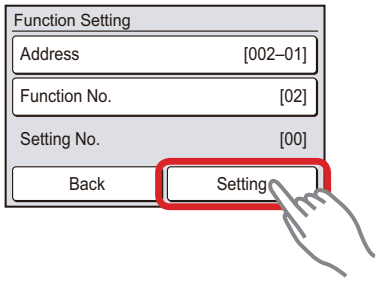

6. Setting screen of “Setting No.” is displayed. Set the Setting No. by touching “▲” or “▼”. (Setting range is from “00” to “99”.)

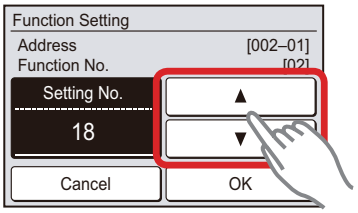

Example: When refrigerant circuit address data "18" is set

When “OK” is touched, the Function Setting verification screen is displayed.

7. Touch “Yes” on the verification screen.

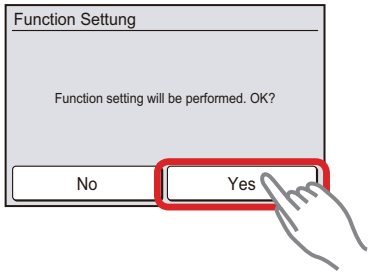

After the Setting screen was displayed, the display returns to the Function Setting screen.

● Completion of setting mode

To exit the setting mode and return to the Maintenance screen, touch “Back” on the Function Setting screen.

FUNCTION SETTINGS

● Setting up each indoor unit

Setting must be performed on each indoor unit requiring address setting by repeating following procedures.

- "Preparation" on page 07-45
- "Entering setting mode" on page 07-46
- "Indoor unit address setting" on page 07-46
- "Refrigerant circuit address setting" on page 07-47
- "Completion of setting mode" on page 07-48

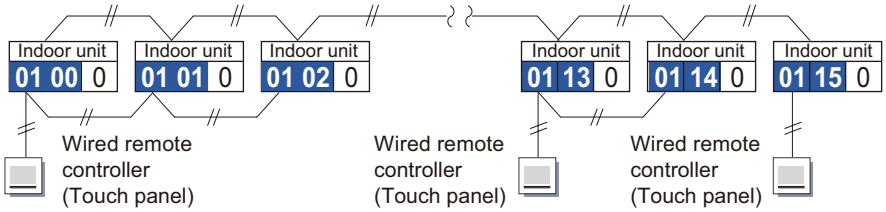

● Resetting the power after setting up all indoor units

NOTES:

- If the reset is not performed, function cannot be read correctly.
- After all the functions have been set, the circuit breaker needs to be switched off for at least 2 minutes.
  - After the 2 minutes has passed, power can be restored.
  - The set function is stored in the PCB and will remain in memory even when the power of indoor unit is turned off.
    However setting function is effective after disconnecting the power supply and then reconnecting it.
- Record the latest configuration of the indoor unit function setting on a label, and put the label on the unit so it can be used for after-sales service operations.

FUNCTION SETTINGS

■ Address setting by wired remote controller (UTY-RLR∗)

- Indoor unit addresses and refrigerant circuit addresses can be set up using wired remote controllers.
- This function allows setting the addresses of all indoor units to which a wired remote controller is being connected.
- This function cannot be used to set up remote controller addresses.
  Be sure to set them up using the rotary switches on the PCB of each indoor unit. (Refer to "Manual address setting method" on page 07-9.)
- This function cannot be used on the slave units.

● Preparation

1. Make sure that all indoor unit address switches (IU AD x10, IU AD x1) and refrigerant circuit address switches (REF AD x10, REF AD x1) on the PCB of each indoor unit are set at 0 (factory setting).
   The layout of the switches differs by the type of the indoor unit. For the details, refer to "Setting on indoor unit PCB" on page 07-74.

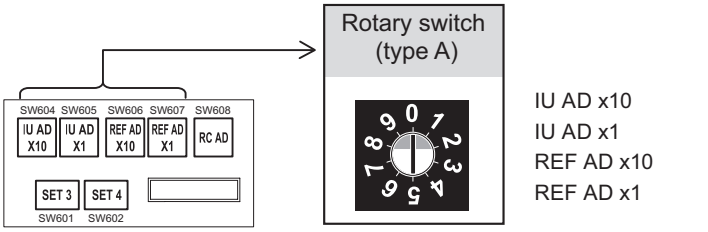

Check the switch position is set at “0”.
(Factory setting)

2. If multiple indoor units are connected to a single wired remote controller, set up the remote controller address with “Automatic address setting”.
   Example: When 4 indoor units are connected

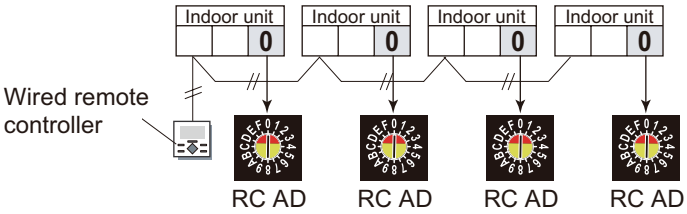

3. Before turning on the power of indoor unit, reconfirm following items:
   - Piping air tight test and vacuuming have been performed firmly.
   - There is no wiring mistake.

4. Turn on the power of indoor units.
   By turning on the power, the indoor units initialize EEV.

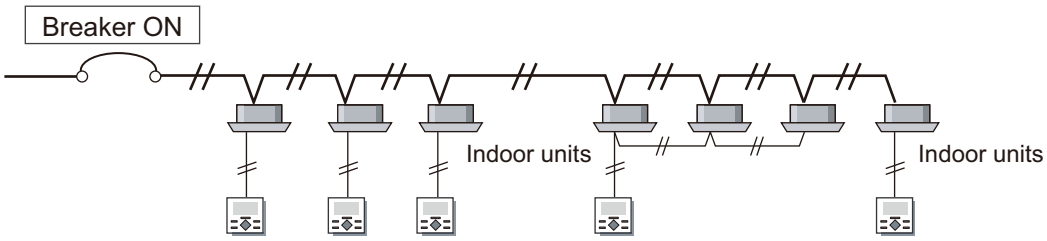

FUNCTION SETTINGS

FUNCTION SETTINGS

● Entering setting mode

1. Press and hold the 3 buttons of MENU, <, and ENTER at the same time for 2 seconds or longer. Initial display of the setting mode will be displayed.

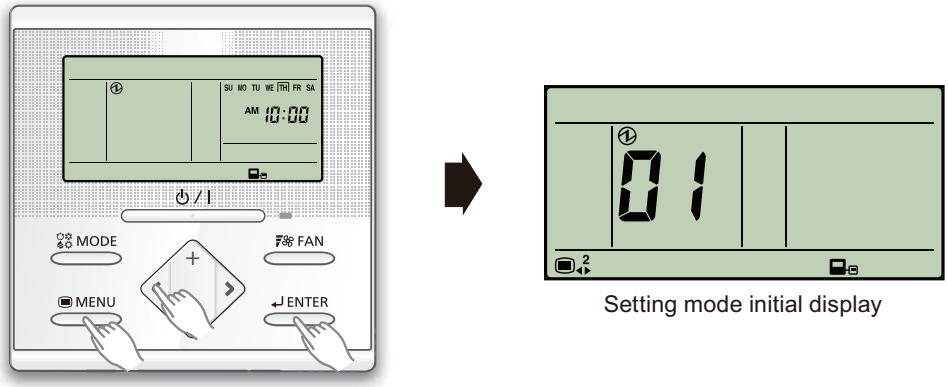

Setting mode initial display

2. In Menu 2 settings, select “13” by pressing < or > button.

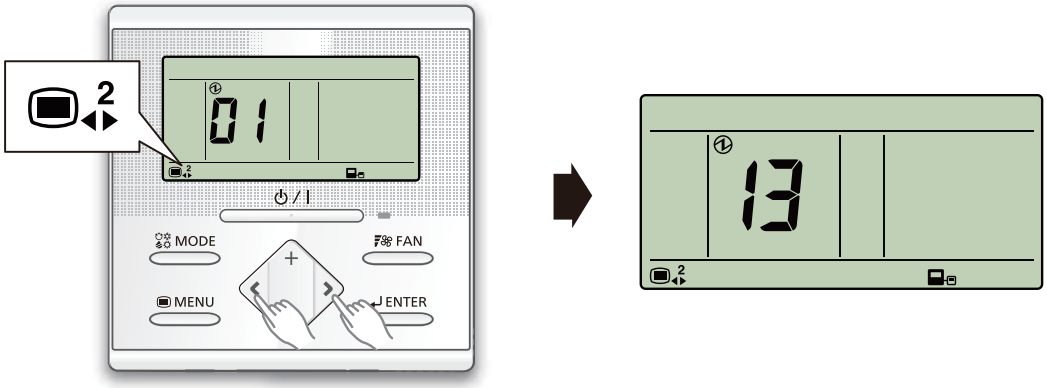

3. Press ENTER button.

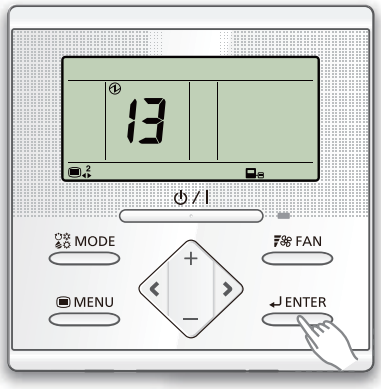

FUNCTION SETTINGS

● Indoor unit address setting

NOTE: Perform this setting on the master remote controller.

1. By pressing the + or - button, select a remote controller address. (Select the indoor unit you want to operate.) Then pres the ENTER button.

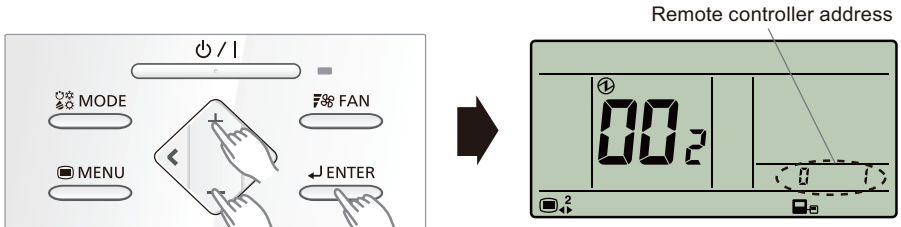

Example: When remote controller address “01” is selected

2. By pressing the + or - button, display function number “01”. Then press the ENTER button.

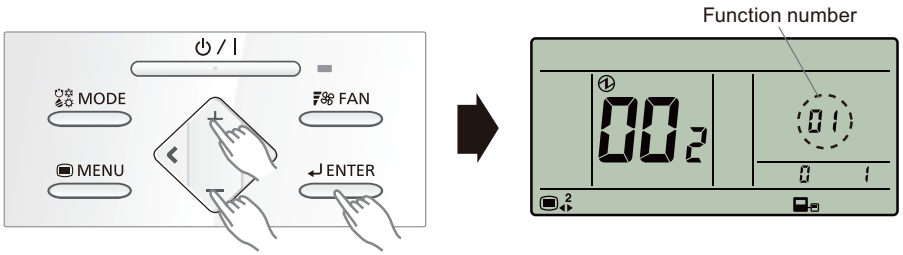

3. By pressing the + or - button, set up the indoor unit address. (The setting range is from “00” to “63”.)

Example: When indoor unit address data “12” is set up

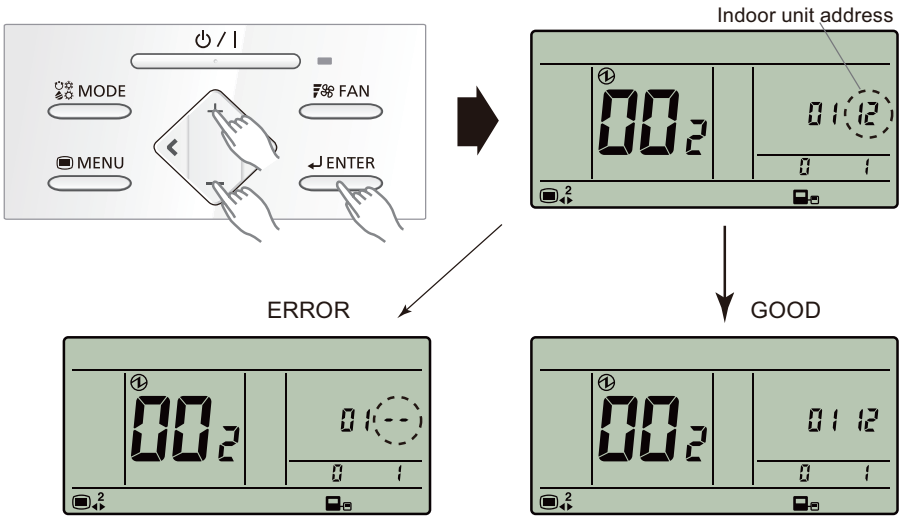

- When the address data is properly set up on the indoor unit, the set number will be displayed. (GOOD)
- When the address data is not set up correctly, “- -” is displayed. (ERROR) Back to the previous step and set up the indoor unit address data again.

4. To return to the address selection screen, press the ENTER button. If setting has been completed, press MENU button to return to the Menu 2 item selection screen.

FUNCTION SETTINGS

FUNCTION SETTINGS

● Refrigerant circuit address setting

NOTE: Perform this setting on the master remote controller.

1. By pressing the + or - button, select a remote controller address. (Select the indoor unit you want to operate.) Then press the ENTER button.

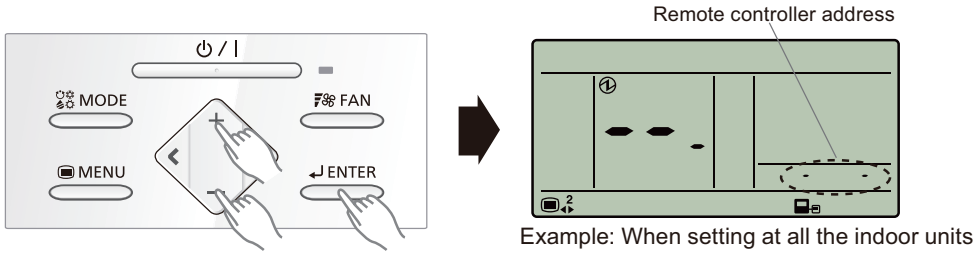

Example: When setting at all the indoor units

2. By pressing the + or - button, display function number “02”. Then press the ENTER button.

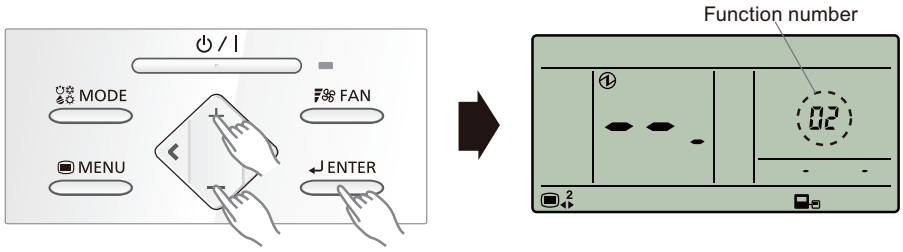

3. By pressing the + or - button, set up the refrigerant circuit address. (The setting range is from “00” to “99”.)

Example: When refrigerant circuit address data “18” is set up

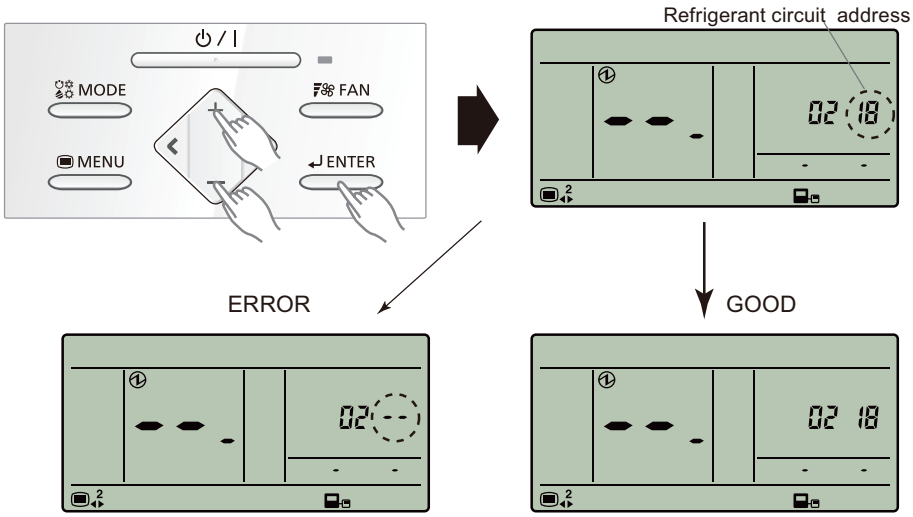

- When the address data is properly set up on the indoor unit, the set number will be displayed. (GOOD)
- When the address data is not set up correctly, “- -” is displayed. (ERROR) Back to the previous step and set up the indoor unit address data again.

4. To return to the address selection screen, press the ENTER button. If setting has been completed, press MENU button to return to the Menu 2 item selection screen.

● Completion of setting mode

To exit the setting mode and return to the regular display, hold down the 3 buttons of MENU, <, and ENTER at the same time for 2 seconds or longer.

FUNCTION SETTINGS

● Setting up each indoor unit

Setting must be performed on each indoor unit requiring address setting by repeating following procedures:

- "Preparation" on page 07-50
- "Entering setting mode" on page 07-51
- "Indoor unit address setting" on page 07-52
- "Refrigerant circuit address setting" on page 07-53
- "Completion of setting mode" on page 07-53

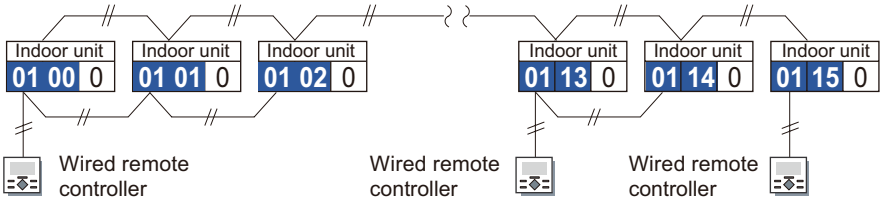

● Resetting the power after setting up all indoor units

NOTES:

- If the reset is not performed, function cannot be read correctly.
- After all the functions have been set, the circuit breaker needs to be switched off for at least 2 minutes.
  - After the 2 minutes has passed, power can be restored.
  - The set function is stored in the PCB and will remain in memory even when the power of indoor unit is turned off.
    However setting function is effective after disconnecting the power supply and then reconnecting it.
- Record the latest configuration of the indoor unit function setting on a label, and put the label on the unit so it can be used for after-sales service operations.

FUNCTION SETTINGS

1-5. Automatic address setting

The addresses of signal amplifiers and indoor units can be set automatically.

⚠ CAUTION

- Mind the following items when performing automatic address setting.
  - The controller cannot be used.
  - Automatic address setting may take about 30 minutes.
  - Emergency stop signal is not accepted.
- When setting both addresses of Signal amplifiers and indoor units automatically, be sure to always set the addresses of signal amplifiers first.

■ Automatic address setting method

Automatic address setting needs to be performed by following steps mentioned below in order.

<Step 1> Manual setting of outdoor unit	Refer to the set up procedures in following sections: • "Manual address setting method" on page 07-9 • "Terminal resistor setting" on page 07-63
↓	
<Step 2> Turning power on of all units	
↓	
<Step 3> Automatic address setting of Signal amplifier	Refer to the set up procedure in following section: "Automatic address setting of signal amplifier" on page 07-57
↓	
<Step 4> Automatic address setting of indoor unit	Refer to the set up procedure in following section: "Automatic address setting of indoor unit" on page 07-59

FUNCTION SETTINGS

■ Components location

Components related to automatic address setting are located on the outdoor unit PCB.

Set the functions of an outdoor unit with the push buttons (SW107, SW108, and SW109) while observing the 7-segment LED lamps (LED105 and LED104) on the PCB.

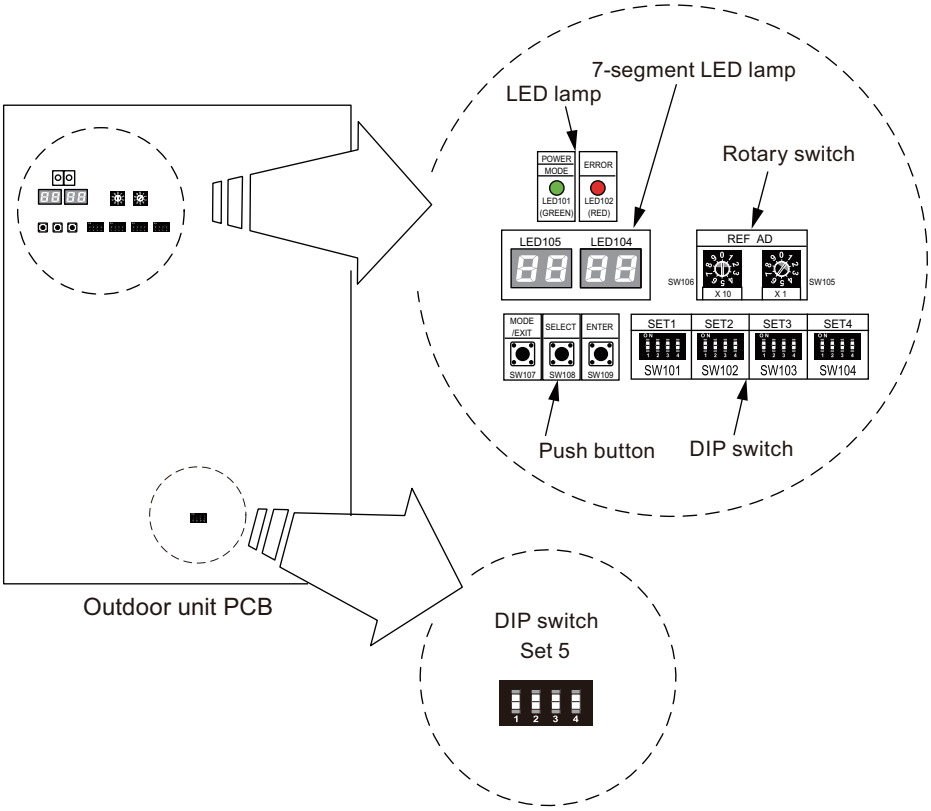

NOTE: For details of DIP switch set 5, refer to "Terminal resistor setting" on page 07-63.

FUNCTION SETTINGS

■ Preparation

Before performing the setting, be sure to conducting necessary preparations.

1. Make sure that the operation of the outdoor unit has stopped (if it is still running, stop the operation), and turn off the power.
2. Remove the front panel of the outdoor unit.
3. Remove the lid of the electrical component box to expose the PCB.
4. Turn on the power of the outdoor unit. When the system is operated normally, the indicator lamps may light as in following figure:

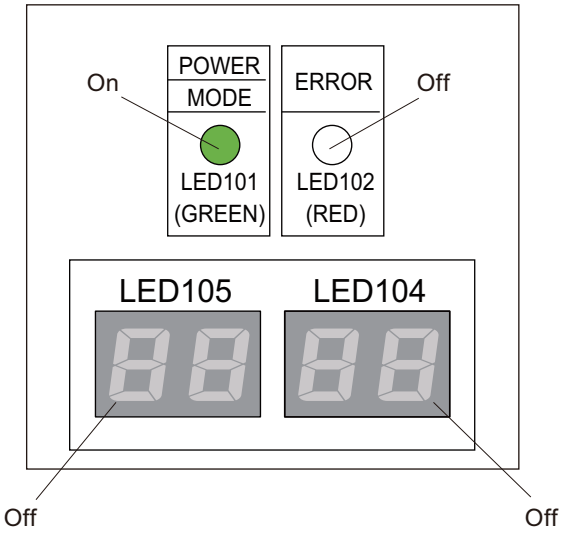

- Make sure that the POWER/MODE indicator lamp (LED101) is on and the ERROR indicator lamp (LED102) is off.
- If there is a system error, the ERROR indicator lamp (LED102) flashes. Check the wiring and power supply. After confirming the ERROR indicator lamp (LED102) has turned off, proceed to the setting procedure.

■ Automatic address setting of signal amplifier

⚠ CAUTION

- This function can be used for a maximum of 8 signal amplifiers installed within a same refrigerant system.
- Perform this setting on only 1 outdoor unit (master unit) within the same network. No duplicate setting of this function from other outdoor unit is allowed.
- When setting the address of a signal amplifier automatically, be sure to always set the address on the PCB of the signal amplifier to “1” (factory setting).

1. After verifying that the system is operating normally, press the MODE/EXIT button (SW107) once.

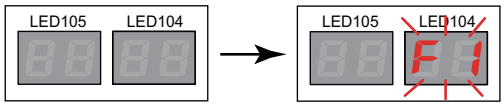

2. Press the SELECT button (SW108) to display “F3” on LED104.
   *1: Do not set “F1” and “F9” usually since they are used for maintenance.

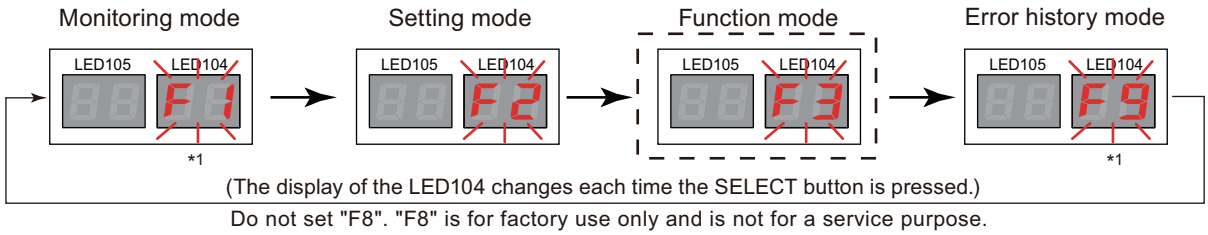

FUNCTION SETTINGS

3. When “F3” is displayed on the LED104, press the ENTER button (SW109). Indicator on the LED105 flashes.

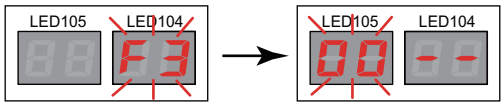

4. Press the SELECT button (SW108) to display “10” on the LED105.

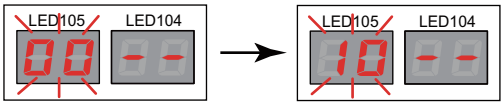

5. When “10” is displayed on the LED105, hold down the ENTER button (SW109) for 3 seconds or longer. (Unless it is held down for at least 3 seconds, the selection will not be confirmed.) When the automatic address setting function is activated, the display changes to “run.”

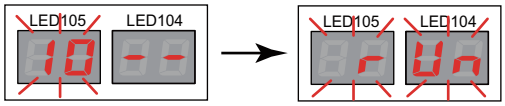

6. When the automatic address setting is completed, the number of signal amplifier is displayed on the LED104. Verify that the count matches the number of signal amplifiers being installed.

Example: When 8 signal amplifiers are being connected

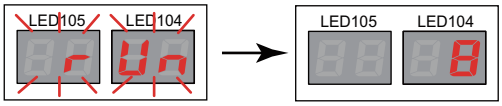

7. To exit the automatic address setting, press the ENTER button (SW109) in the setting completed status shown in the previous step.

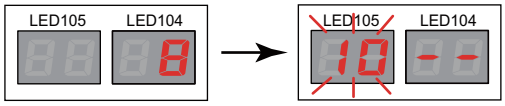

8. To exit the function mode, press the MODE/EXIT button (SW107).

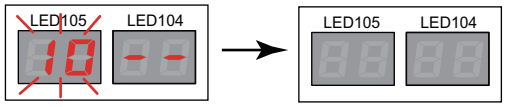

RELATED LINKS

"Signal amplifier" on page 07-133

FUNCTION SETTINGS

■ Automatic address setting of indoor unit

⚠ CAUTION

- This function can be used for a maximum of 64 indoor units installed within a same refrigerant system. However, a maximum of 48 indoor units can be installed within the same refrigerant system.
- This function cannot be used for indoor units being connected to other refrigerant systems via the network. For details, refer to "Transmission cable" in Chapter 6. SYSTEM DESIGN on page 06-58
- When setting the addresses automatically, make sure that the position of following switches are set at “0” (Factory setting).
  - IU AD x10 (SW6)
  - IU AD x1 (SW7)
  - REF AD x10 (SW8)
  - REF AD x1 (SW9)
- When an indoor unit address is set up, a refrigerant circuit address is also set up at the same time. (The refrigerant circuit address of an outdoor unit being connected within the same refrigerant system is set up.)

1. After verifying that the system is operating normally, press the MODE/EXIT button (SW107) once.

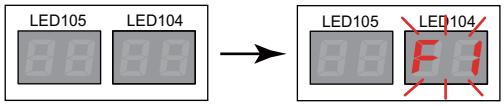

2. Press the SELECT button (SW108) to display “F3” on LED104.
   *1: Do not set “F1” and “F9” usually since they are used for maintenance.

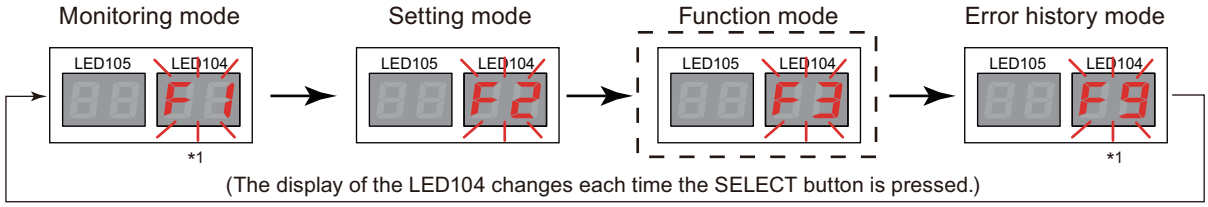

Do not set "F8". "F8" is for factory use only and is not for a service purpose.

3. When “F3” is displayed on the LED104, press the ENTER button (SW109). Indicator on the LED105 flashes.

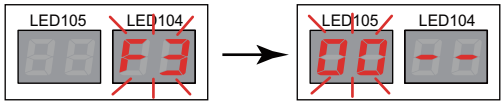

4. Press the SELECT button (SW108) to display “11” on the LED105.

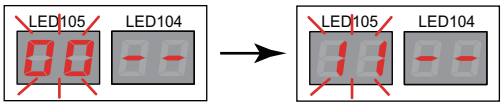

5. When “11” is displayed on the LED105, hold down the ENTER button (SW109) for 3 seconds or longer. (Unless it is held down for at least 3 seconds, the selection will not be confirmed.) When the automatic address setting function is activated, the display changes to “run.”

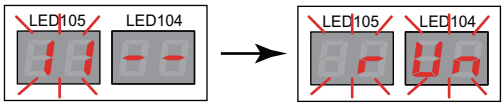

FUNCTION SETTINGS

FUNCTION SETTINGS

6. When the automatic address setting is completed, the number of indoor units of which the automatic address setting succeeded is displayed on the LED105, and the number of indoor units of which the automatic address setting failed is displayed on the LED104.

Example: When 25 indoor units are connected, and the automatic setting of the addresses of all indoor units ended normally

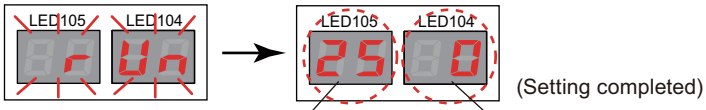

LED105: The number of indoor units of which automatic address setting succeeded

LED104: The number of indoor units of which automatic address setting failed

Example: When 25 indoor units are connected, and the automatic setting of the addresses of three indoor units failed

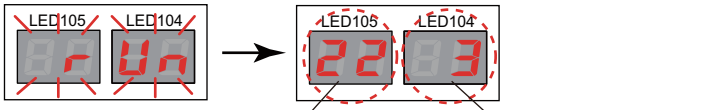

LED105: The number of indoor units of which automatic address setting succeeded

LED104: The number of indoor units of which automatic address setting failed

If automatic address setting failed, make sure that all of the rotary switches SW6 to SW9 on the PCBs of the failed indoor units are positioned at “0” and that wiring and power supply are correct, and then perform the automatic address setting again.

7. When the ENTER button (SW109) is pressed, end processing will begin and the LED displays start to blink. For completing this process will take about 30 seconds.

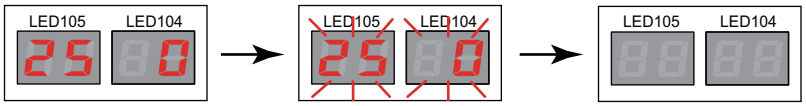

When the setting is completed, the LED displays go off.

FUNCTION SETTINGS

■ Example of setting flow

● Example 1: Setting both addresses of signal amplifiers and indoor units automatically

⚠ CAUTION

- Complete the refrigerant circuit address setting of outdoor units before activating the automatic address setting function.
- Setting the indoor units addresses automatically does not necessarily mean that the addresses are assigned sequentially starting from the indoor unit which is located the closest to the outdoor units. (Instead, addresses are assigned randomly.)
  With respect to the setting of refrigerant circuit addresses, the same address numbers of the refrigerant circuit addresses of the outdoor units being connected within the same refrigerant system are assigned.
- To find out what addresses have been assigned to individual indoor units, perform a separate address check operation.

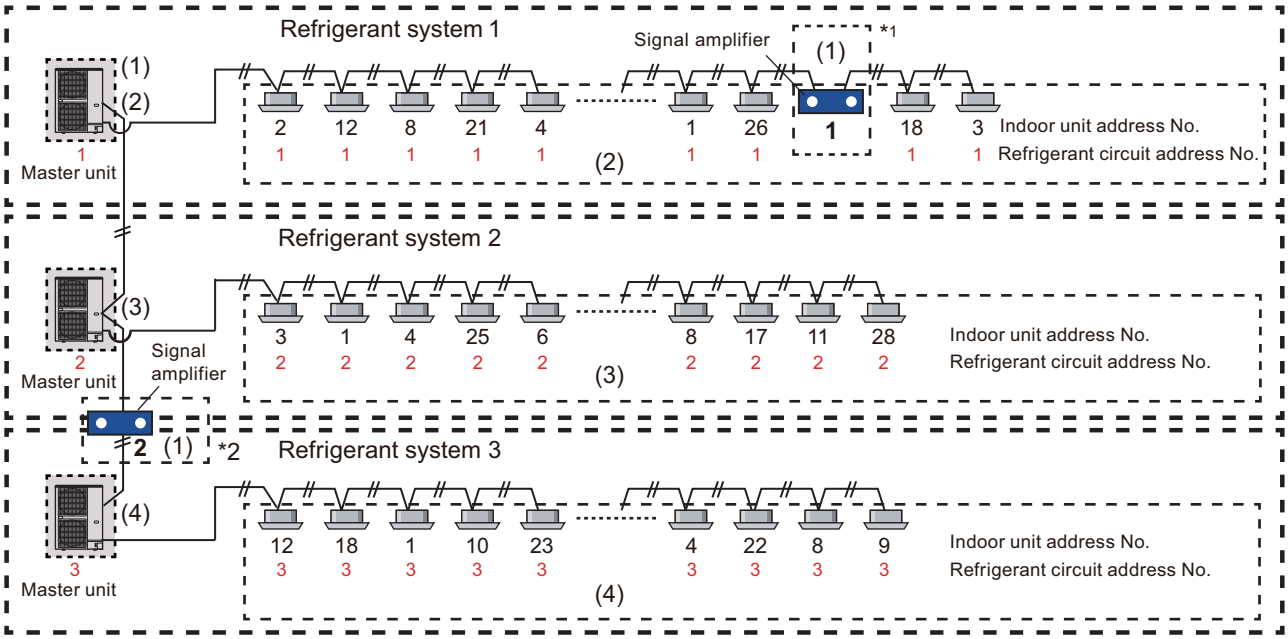

1. Activate the automatic address setting function of signal amplifier on the master unit of Refrigerant system 1. (1)
   An address is automatically assigned to all signal amplifiers on the network.
   (Because an address is also assigned to the signal amplifiers being connected in Refrigerant system 2 and3, its is not necessary to perform the automatic address setting of these signal amplifiers again on the master units of Refrigerant system 2 and 3.)

2. Activate the automatic address setting function of indoor unit on the master unit of Refrigerant system 1. (2)
   An indoor unit address and a refrigerant circuit address are automatically set up for all indoor units being connected in Refrigerant system 1.

3. Activate the automatic address setting function of indoor unit on the master unit of Refrigerant system 2. (3)
   An indoor unit address and a refrigerant circuit address are automatically set up for all indoor units being connected in Refrigerant system 2.

4. Activate the automatic address setting function of indoor unit on the master unit of Refrigerant system 3. (4)
   An indoor unit address and a refrigerant circuit address are automatically set up for all indoor units being connected in Refrigerant system 3.

FUNCTION SETTINGS

*1: If the total wiring length within a segment is expected to exceed 500 m, insert a signal amplifier. For details, refer to "Signal amplifier (UTY-VSGXZ1)" in Chapter 5. CONTROL SYSTEM on page 05-185.

*2: If the number of nodes (the number of units of indoor units, outdoor units, controllers, and others) is expected to exceed 64 (including signal amplifiers), insert a signal amplifier. For details refer to "Signal amplifier (UTY-VSGXZ1)" in Chapter 5. CONTROL SYSTEM on page 05-185.

● Example 2: Setting automatically the address of signal amplifiers only (When the addresses of indoor units will be set manually)

⚠ CAUTION

- When indoor units are being connected via different refrigerant systems, never activate the automatic address setting function of indoor unit.
- As long as master units are on the same network, any master unit can set the addresses of signal amplifiers automatically. Perform this setting on only 1 outdoor unit (master unit) within the same network. No duplicate setting of this function from other outdoor unit is allowed.

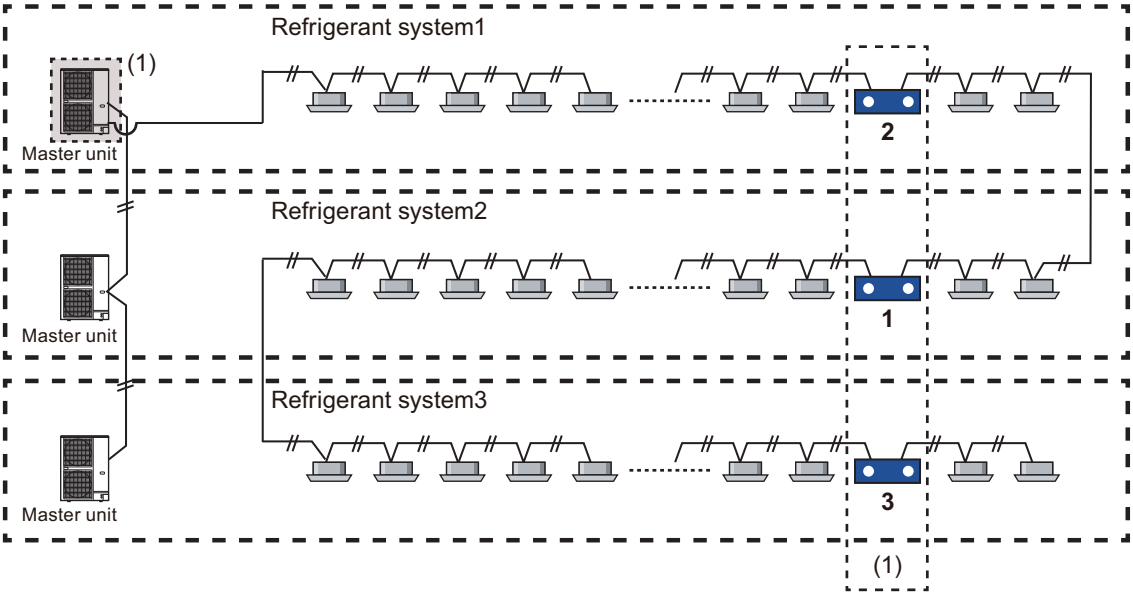

Activate the automatic address setting function of signal amplifier on the master unit of Refrigerant system 1.

An address is automatically assigned to all signal amplifiers on the network.

FUNCTION SETTINGS

1-6. Terminal resistor setting

⚠ CAUTION

- Be sure to set the terminal resistor according to specifications.
- Set the terminal resistor for every network segment (NS).
  - If terminal resistor is set in multiple devices, the overall communication system may be damaged.
  - If terminal resistor is not set in a device, abnormal communication may occur.

The layout of the switches differs by the type of the indoor unit. For the details, refer to "Setting on indoor unit PCB" on page 07-74.

NOTES:

- Be sure to set one terminal resistor in a network segment. You can set the terminal resistor at the outdoor unit or signal amplifier.
- When setting the terminal resistor of a signal amplifier, refer to the installation manual of the signal amplifier.
- When setting multiple terminal resistors, take note of the following conditions:
  - How many network segments are there in a VRF system?
  - Where will you set the terminal resistors in a network segment?
    (Condition for 1 segment: Total number of outdoor units, indoor units, and signal amplifiers is less than 64, or the total length of the transmission line is less than 500 m)
  - How many outdoor units are connected in 1 refrigerant system?

  Based on the conditions mentioned above, set the outdoor unit DIP switch SET5-4 in accordance with the table below.

DIP switch SET5-4	Terminal resistor	Factory setting
Off	Disabled	◆
On	Enabled	

■ Setting example

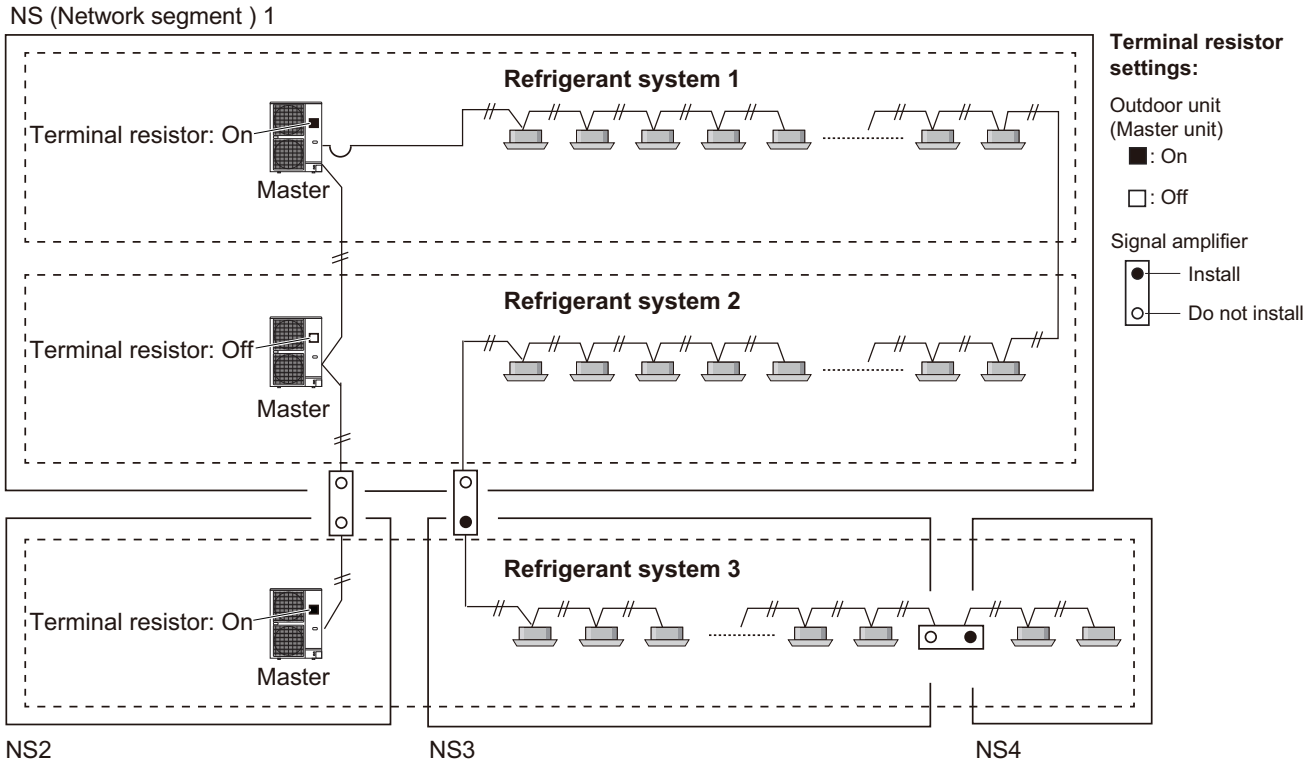

FUNCTION SETTINGS

1-7. Indoor unit connection check

NOTE: When performing indoor unit connection check, Service tool and Web monitoring tool need to be stopped.

1. After verifying that the system is operating normally, press the MODE/EXIT button (SW107) once.

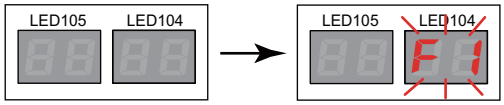

2. Press the SELECT button (SW108) to display “F3” on LED104.
   *1: Do not set “F1” and “F9” usually since they are used for maintenance.

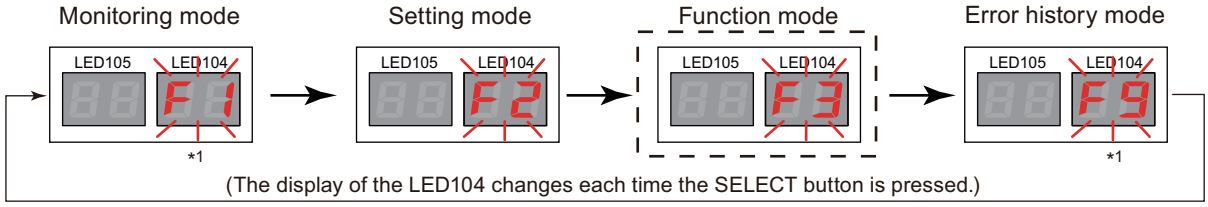

Do not set "F8". "F8" is for factory use only and is not for a service purpose.

3. When “F3” is displayed on the LED104, press the ENTER button (SW109). Indicator on the LED105 flashes.

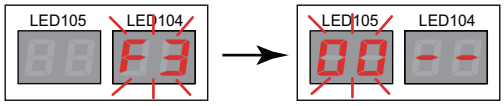

4. Press the SELECT button (SW108) to display “12” on the LED105.

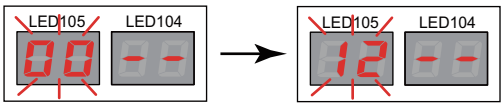

5. When “12” is displayed on the LED105, hold down the ENTER button (SW109) for 3 seconds or longer. (Unless it is held down for at least 3 seconds, the selection will not be confirmed.) When the indoor unit connection check function is activated, the display changes to “run.”

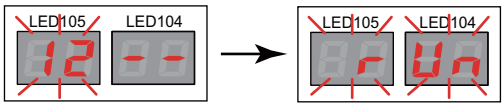

When the function is not activated (during maintenance), the display changes to “FAIL”.

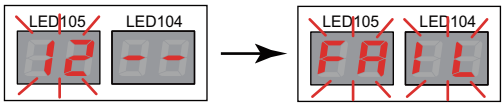

6. When the indoor unit connection check is completed, the number of indoor unit is displayed on the LED104 and LED105. Verify that the count matches the number of indoor units being installed.

Example: When 8 indoor units are being connected

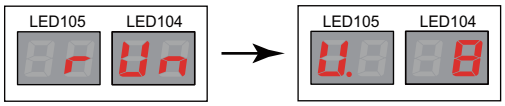

7. When the number of indoor units is displayed on the LED104 and LED105, press the SELECT button (SW108). The display changes to volume ratio of the indoor units.

Example: When volume ratio of the indoor units is 120%

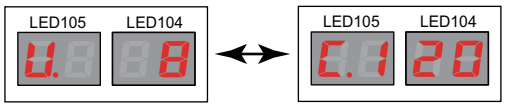

FUNCTION SETTINGS

FUNCTION SETTINGS

8. When “the number of indoor units” or “volume ratio of the indoor units connection” appears on the LED104 and LED105, press the ENTER button (SW109). When indoor unit connection check is completed, the display changes to “PASS.”

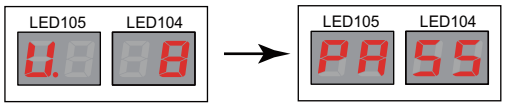

When indoor unit connection check is error, the display changes to “Err.” or “number of error” every 1 second.

Example: Shown numbers of error are three

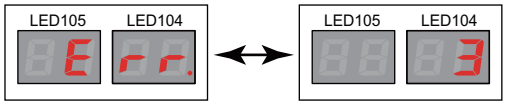

To check the contents of the error, push the ENTER button (SW109). When there are some errors, display can be changed by pushing the SELECT button (SW108).

- Number of indoor unit connection is error

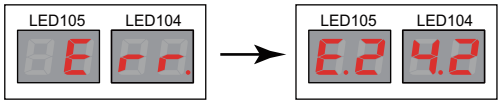

- Volume ratio of the indoor units connection is error

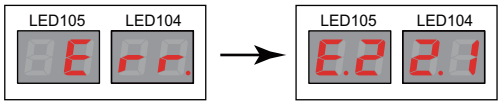

- Overlap address of the indoor unit is error

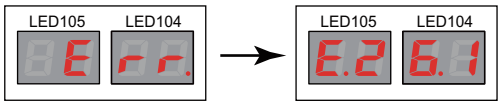

To display the address of the overlap indoor unit, hold down the ENTER button (SW109).

Example: Displaying overlap address to indoor unit address 3

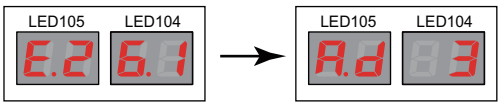

9. To exit the indoor unit connection check, press the ENTER button (SW109) after confirming “PASS” is displayed on the LED105 and LED104.

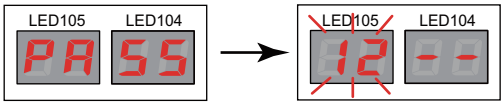

Then, press the MODE/EXIT button (SW107) to exit the function mode.

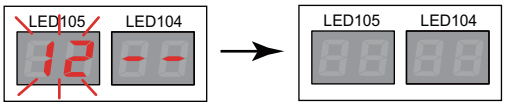

FUNCTION SETTINGS

FUNCTION SETTINGS

2. Function settings

To adjust the functions of this product according to the installation environment, various types of function settings are available.

NOTE: Incorrect settings can cause a product malfunction.

RELATED LINKS

"Setting on outdoor unit PCB" on page 07-67
"Setting on indoor unit PCB" on page 07-74
"Setting by service tool (UTY-ASGXZ1)" on page 07-83
"Indoor unit (setting by wireless remote controller)" on page 07-87
"Indoor unit (setting by UTY-RNK∗)" on page 07-93
"Indoor unit (setting by UTY-RSR∗, UTY-RHR∗)" on page 07-96
"Indoor unit (setting by UTY-RSK∗, UTY-RHK∗)" on page 07-99
"Indoor unit (setting by UTY-RNR∗Z∗)" on page 07-102
"Indoor unit (setting by UTY-RLR∗)" on page 07-105
"Function details" on page 07-108
"Wired remote controller (UTY-RNK∗)" on page 07-112
"Simple remote controller (UTY-RSK∗, UTY-RHK∗)" on page 07-114
"Group remote controller" on page 07-116
"Touch panel controller" on page 07-118
"Central remote controller (UTY-DCG∗Z∗)" on page 07-119
"Wired remote controller (Touch panel)" on page 07-121
"Wired remote controller (UTY-RLR∗)" on page 07-125
"Simple remote controller (UTY-RSR∗, UTY-RHR∗)" on page 07-127
"Network convertor (UTY-VTGX, UTY-VTGXV)" on page 07-129
"Network convertor (UTY-VGGXZ1)" on page 07-131
"Signal amplifier" on page 07-133
"KNX convertor for VRF" on page 07-135
"KNX convertor for Indoor unit" on page 07-137
"Modbus converter for VRF" on page 07-138
"Modbus converter for indoor unit" on page 07-141
"Network converter for LonWorks" on page 07-143
"Duct static pressure setting" on page 07-144
"Administrative indoor unit setting" on page 07-146
"Energy saving setting on System controller" on page 07-148
"Electricity charge apportionment setting (System controller, Touch panel controller)" on page 07-154

FUNCTION SETTINGS

2-1. Setting on outdoor unit PCB

■ Components location

Set the functions of an outdoor unit with the push buttons (SW107, SW108, and SW109) while observing the 7-segment LED lamps (LED105 and LED104) on the PCB.

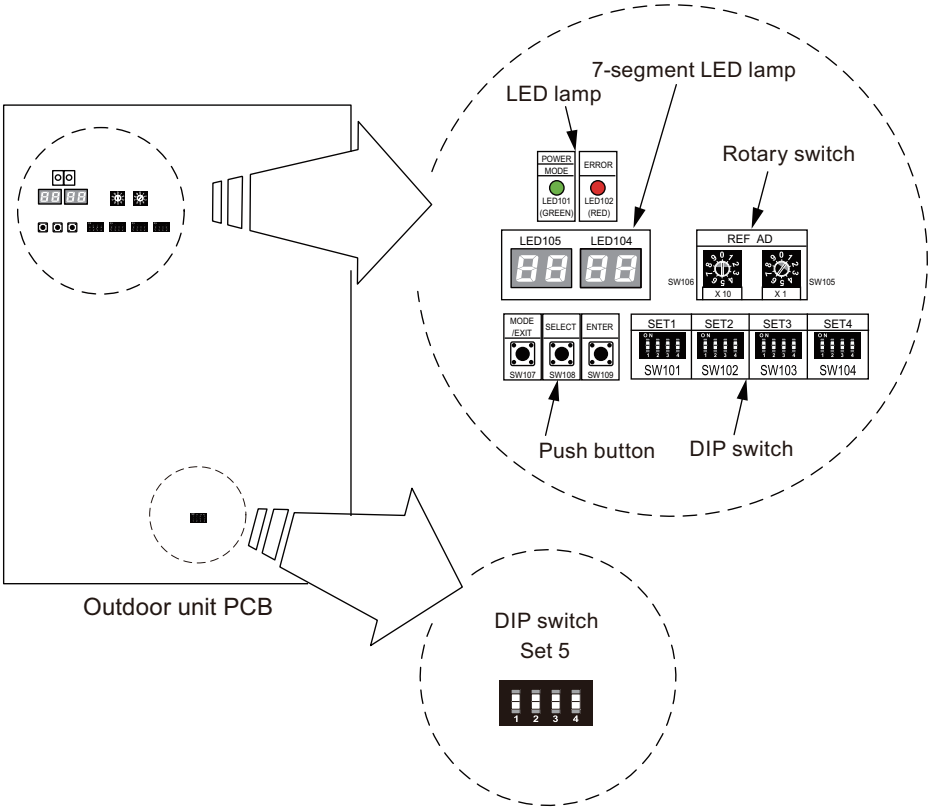

Actual switch position may differ depending on the outdoor unit.

■ Preparation

Before performing the setting, be sure to conducting necessary preparations.

1. Make sure that the operation of the outdoor unit has stopped (if it is still running, stop the operation), and turn off the power.
2. Remove the front panel of the outdoor unit.
3. Remove the lid of the electrical component box to expose the PCB.

FUNCTION SETTINGS

4. Turn on the power of the outdoor unit. When the system is operated normally, the indicator lamps may light as in following figure:

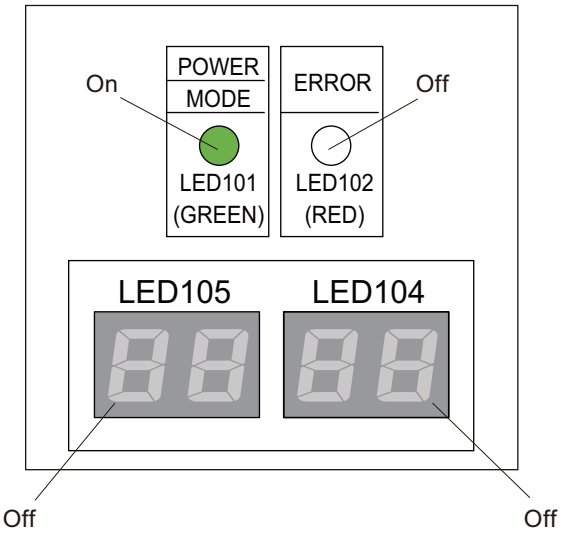

- Make sure that the POWER/MODE indicator lamp (LED101) is on and the ERROR indicator lamp (LED102) is off.
- If there is a system error, the ERROR indicator lamp (LED102) flashes. Check the wiring and power supply. After confirming the ERROR indicator lamp (LED102) has turned off, proceed to the setting procedure.

■ Function setting method

1. After verifying that the system is operating normally, press the MODE/EXIT button (SW107) once.

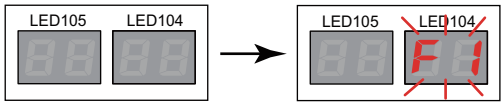

2. Press the SELECT button (SW108) to display “F2” on LED104.
   *1: Do not set “F1” and “F9” usually since they are used for maintenance.

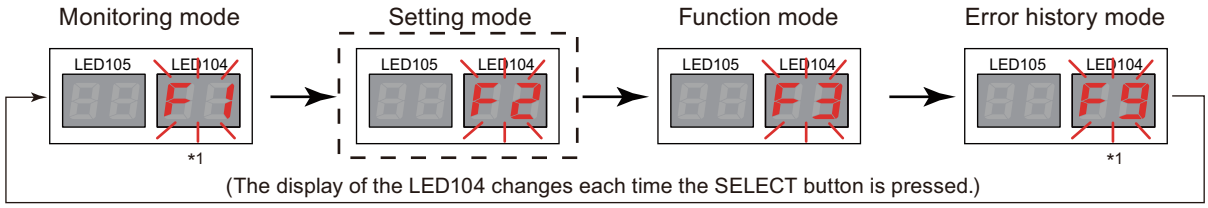

Do not set "F8". "F8" is for factory use only and is not for a service purpose.

3. When “F2” is displayed on the LED104, press the ENTER button (SW109). Indicator on the LED105 flashes, and the flashing of “F2” on the LED104 stops and lights a number.

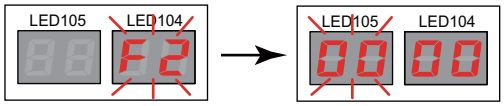

FUNCTION SETTINGS

FUNCTION SETTINGS

4. With referring to "Setting list" on page 07-70, press the SELECT button (SW108) to display the code number of the mode you want to set on the LED105.

Example: To select switching between Forced stop and Emergency stop

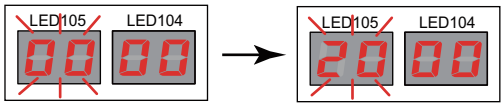

Then, press the ENTER button (SW109) to confirm the mode you want to set.
Flashing of LED105 stops and lights a number, and the lit number on the LED104 starts to flash.

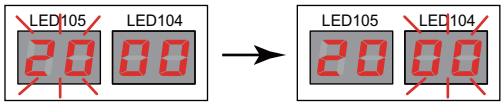

5. Again, with referring to "Setting list" on page 07-70, press the SELECT button (SW108), and display the code number of the function you want to set on the LED104.

Example: To select the Emergency stop function

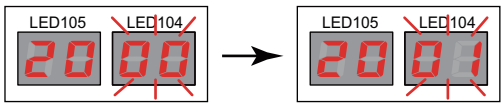

Then, press the ENTER button (SW109) to confirm the function you want to set.
Flashing of LED104 stops and lights a number.

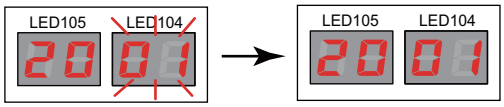

To set another function, press the ENTER button (SW109) in the completed state of current setting. Then, repeat steps 4. and 5. to set each function.

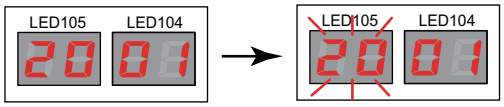

6. After all necessary function settings are completed, press the ENTER button (SW109) in the setting completed state shown in the previous step.
5 seconds after, even if the ENTER button (SW109) is not pressed, the LED105 starts to flash automatically.

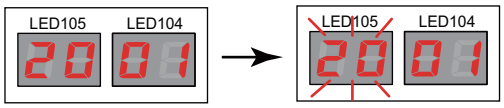

Then, press the MODE/EXIT button (SW107) to exit the function setting mode.

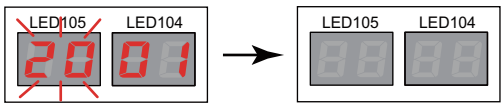

FUNCTION SETTINGS

FUNCTION SETTINGS

■ Setting list

NOTE: Code numbers not listed in the table blow are not available in this product. Do not set the unsupported code numbers.

LED105 code no.		Setting mode	LED104 code no.		Setting function	Factory setting	Remarks
0	0	Prohibited	0	0	Prohibited	♦	Setting prohibited
1	0	Prohibited	0	0	Prohibited	♦	Setting prohibited
			0	1	Prohibited		
			0	2	Prohibited		
			0	3	Prohibited		
1	1	Cooling capacity shift	0	0	Normal mode	♦	
			0	1	Save energy mode		
			0	2	High power mode 1		
			0	3	High power mode 2		
			0	4	Prohibited		
1	2	Heating capacity shift	0	0	Normal mode	♦	
			0	1	Save energy mode		
			0	2	High power mode 1		
			0	3	High power mode 2		
1	3	Prohibited	0	0	Prohibited	♦	Setting prohibited
			0	1	Prohibited		
1	4	Prohibited	0	0	Prohibited	♦	Setting prohibited
1	6	Prohibited	0	0	Prohibited	♦	Setting prohibited
1	7	Height difference between indoor units	0	0	Standard	♦	If installing the indoor units (even only one set) to a lower floor than the outdoor unit, and the height difference between the indoor units is 3 m or greater (i.e., if installing the indoor units on separate floors), set “02 (height difference)”.
			0	1	Prohibited		
			0	2	Height difference		
			0	3	Prohibited		
			0	4	Prohibited		
2	0	Switching between batch stop or emergency stop	0	0	Batch stop	♦	This mode selects the pattern of the stop function to be operated by the external input terminal (CN134). • Batch stop: The stop of all indoor units connected to same refrigerant system due to input signal coming from CN134. • Emergency stop: When emergency stop is actuated, the indoor unit does not accept the operation command from the remote controller. On the other hand, when the emergency stop is released (no input from CN134), the air conditioner does not return to the original operation until operate indoor unit by the remote controller.
			0	1	Emergency stop		

FUNCTION SETTINGS

FUNCTION SETTINGS

LED105 code no.		Setting mode	LED104 code no.		Setting function	Factory setting	Remarks
2	1	Operation mode selecting method	0	0	Priority given to the first command	♦	Select the priority setting of the operation mode. • Priority given to the first command: Priority is given to the operation mode which is set first. • Priority given to external input of outdoor unit: Priority is given to the operation mode which is set by the external input terminal (CN132). • Priority given to administrative indoor unit: Priority is given to the operation mode of the administrative indoor unit which is set by the wired remote controller.
			0	1	Priority given to external input of outdoor unit		
			0	2	Priority given to administrative indoor unit		
2	2	Prohibited	0	0	Prohibited	♦	Setting prohibited
			0	1	Prohibited		
2	3	Prohibited	0	0	Prohibited	♦	Setting prohibited
			0	1	Prohibited		
			0	2	Prohibited		
			0	3	Prohibited		
2	4	High static pressure mode	0	0	Standard	♦	
			0	1	High static pressure 1 (equivalent to 25 Pa)		
2	5	Prohibited	0	0	Prohibited	♦	Setting prohibited
			0	1	Prohibited		
			0	2	Prohibited		
			0	3	Prohibited		
2	6	Prohibited	0	0	Prohibited	♦	Setting prohibited
			0	1	Prohibited		
2	7	Prohibited	0	0	Prohibited	♦	Setting prohibited
			0	1	Prohibited		
2	8	Prohibited	0	0	Prohibited	♦	Setting prohibited
			0	1	Prohibited		
2	9	Prohibited	0	0	Prohibited	♦	Setting prohibited
			0	1	Prohibited		
3	0	Outdoor unit capacity save setting	0	0	Level 1 (Stop)	♦	The capacity limit in Energy saving peak cut control operation can be selected. With lowering the level, the energy efficiency get higher but the cooling or heating performance gets lower.
			0	1	Level 2		
			0	2	Level 3		
			0	3	Level 4		
			0	4	Level 5		
3	1	Prohibited	0	0	Prohibited	♦	Setting prohibited
			0	1	Prohibited		
4	0	Capacity priority setting (in low noise mode)	0	0	Off (Quiet priority)	♦	If the cooling/heating performance becomes insufficient when the low noise mode is set, it is possible to set “Capacity priority” that automatically cancels the low noise mode. (Once performance is restored, the mode will automatically return to the low noise mode.)
			0	1	On (Capacity priority)		
4	1	Low noise mode setting	0	0	Off (Normal)	♦	
			0	1	On (Low noise mode)		

FUNCTION SETTINGS

FUNCTION SETTINGS

LED105 code no.		Setting mode	LED104 code no.		Setting function	Factory setting	Remarks
4	2	Low noise mode operation level setting	0	0	Level 1	♦	Level 1: The operating sound lowers from about 3 to 5 dB (A) more than the rated value.
			0	1	Level 2		Level 2: The operating sound lowers from about 3 to 5 dB (A) more than the Level 1.
			0	2	Prohibited		
5	3	Intelligent refrigerant control	0	0	Enable	♦	
			0	1	Disable		
			0	2	Enable only evaporation temperature control		
			0	3	Enable only condensation temperature control		
6	0	Prohibited	0	0	Prohibited	♦	Setting prohibited
			0	1	Prohibited		
6	1	Prohibited	0	0	Prohibited	♦	Setting prohibited
7	0	Electricity meter no. setting 1 *1	0	0	Setting number x00	♦	Set the ones digit and tens digit of the number of the electricity meter connected to CN135.
			0	1	Setting number x01		
			• • •	• • •	• • •		
			9	8	Setting number x98		
			9	9	Setting number x99		
7	1	Electricity meter no. setting 2 *1	0	0	Setting number 0xx	♦	Set the hundreds digit of the number of the electricity meter connected to CN135.
			0	1	Setting number 1xx		
			0	2	Setting number 2xx		
7	2	Electricity meter pulse setting 1 *2	0	0	Setting number xx00	♦	Set the ones digit and tens digit of the number of the electricity meter pulse setting connected to CN135.
			0	1	Setting number xx01		
			• • •	• • •	• • •		
			9	8	Setting number xx98		
			9	9	Setting number xx99		
7	3	Electricity meter pulse setting 2 *2	0	0	Setting number 00xx	♦	Set the hundreds digit and thousands digit of the electricity meter pulse setting connected to CN135.
			0	1	Setting number 01xx		
			• • •	• • •	• • •		
			9	8	Setting number 98xx		
			9	9	Setting number 99xx		
9	0	Prohibited	0	0	Prohibited	♦	Setting prohibited
			0	1	Prohibited		
			0	2	Prohibited		
			0	3	Prohibited		
			0	4	Prohibited		
			0	5	Prohibited		
			0	6	Prohibited		
			0	7	Prohibited		
			0	8	Prohibited		
			0	9	Prohibited		
			1	0	Prohibited		
			1	1	Prohibited		

*1: When electricity meter number is set to “000” and “201 to 299”, the pulses input to CN135 become ineffective. Available setting number is “001” to “200”.

FUNCTION SETTINGS

*2: When the electricity meter pulse setting is set to “0000”, the pulses input to CN135 become ineffective. Available setting number is “0001” to “9999”.

FUNCTION SETTINGS

2-2. Setting on indoor unit PCB

Components related to function setting are located on the indoor unit main PCB.

■ Components location

Related components location is differ depending on the type of the indoor unit as follows:

Type of PCB	Type of indoor unit
Type 1	Compact cassette, 4-way flow cassette, Low static pressure duct (Mini duct), Low static pressure duct (Slim duct)/Slim concealed floor, Low static pressure duct (High efficiency), Medium static pressure duct, High static pressure duct, Floor/ceiling, Ceiling
Type 2	Wall mounted (AS∗A018, 024)
Type 3	3D flow cassette
Type 4	Circular flow cassette
Type 5	Wall mounted (AS∗A030, 034)
Type 6	Compact floor
Type 7	Wall mounted (AS∗A004, 007, 009, 012, 014, AS∗E004, 007, 009, 012, 014)
Type 8	One way flow cassette

- **Type 1:**

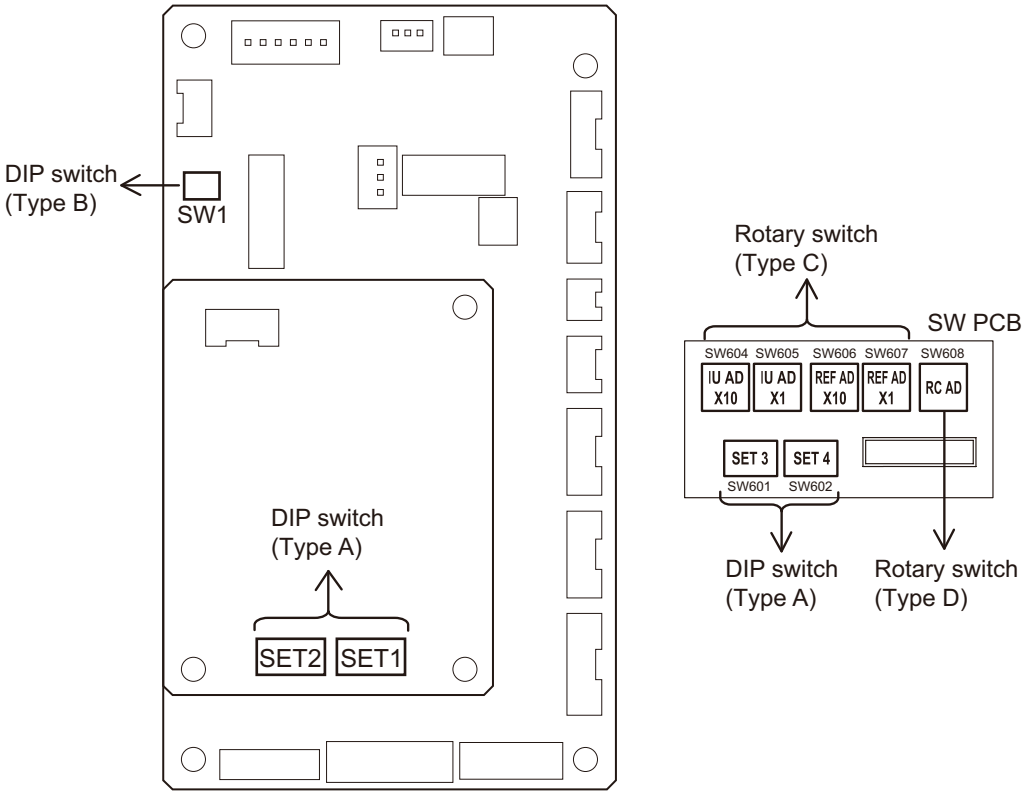

Main PCB

NOTE: SW1 may not be available depending on the models.

FUNCTION SETTINGS

- **Type 2:**

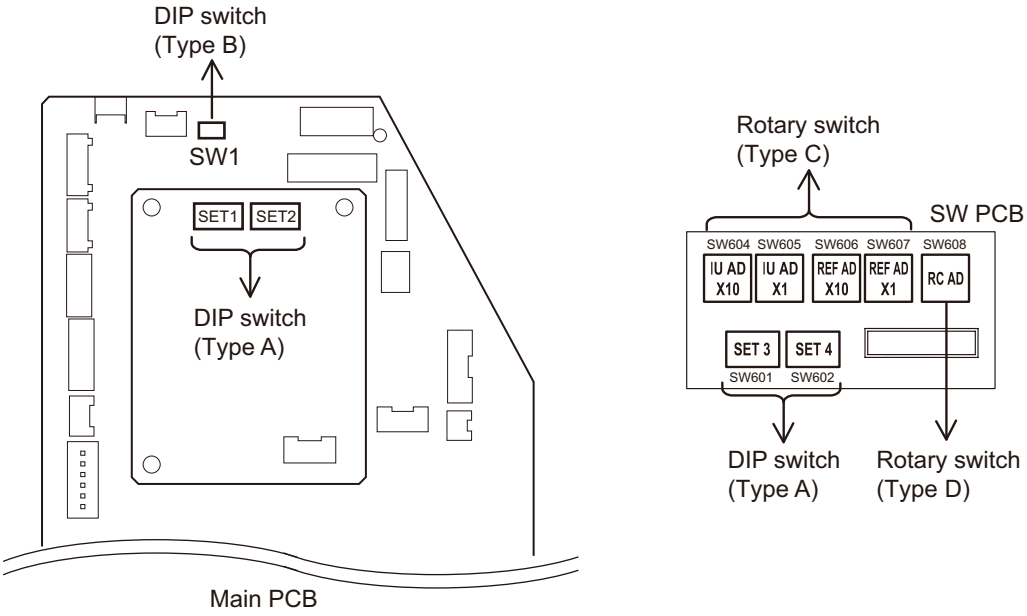

- **Type 3:**

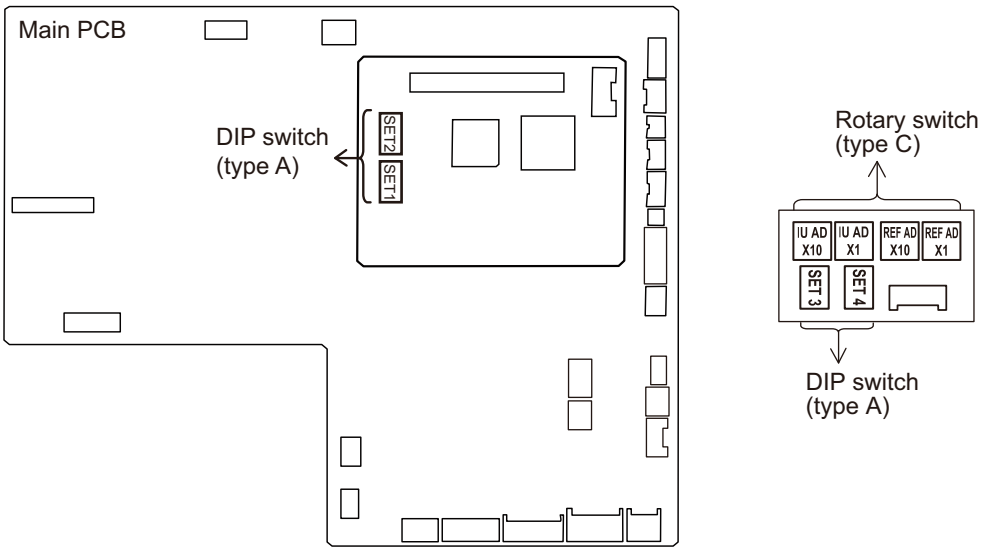

FUNCTION SETTINGS

- **Type 4:**

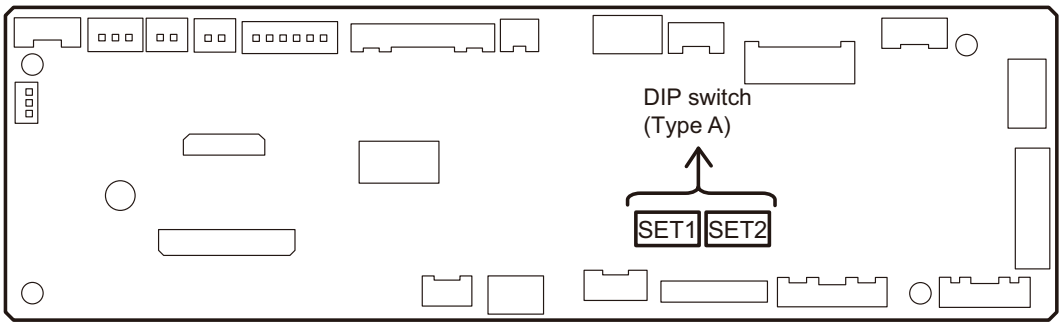

Main PCB

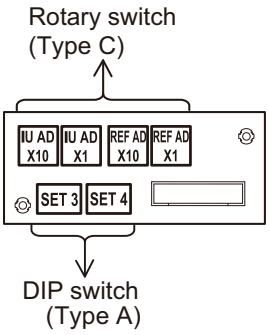

- **Type 5:**

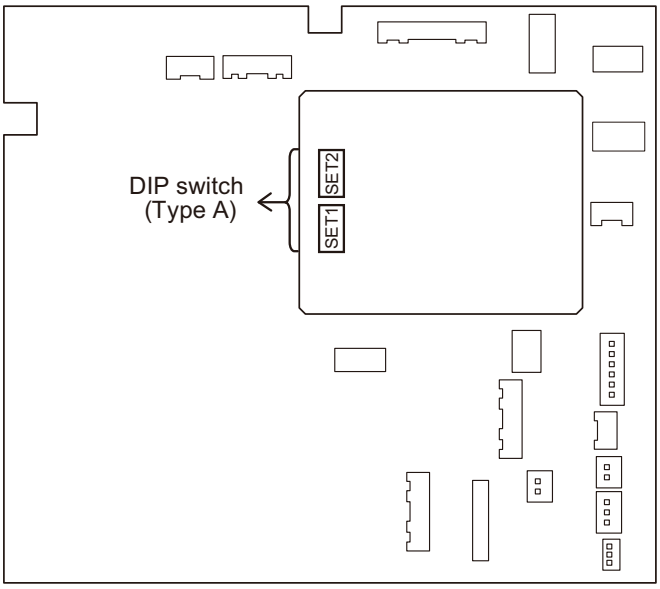

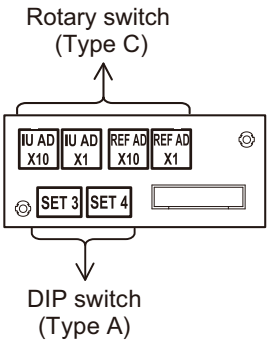

- **Type 6:**

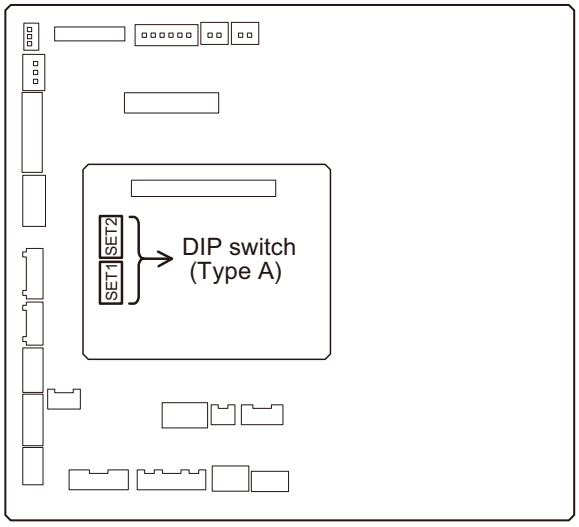

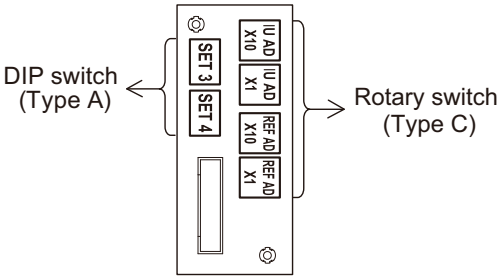

FUNCTION SETTINGS

- **Type 7:**

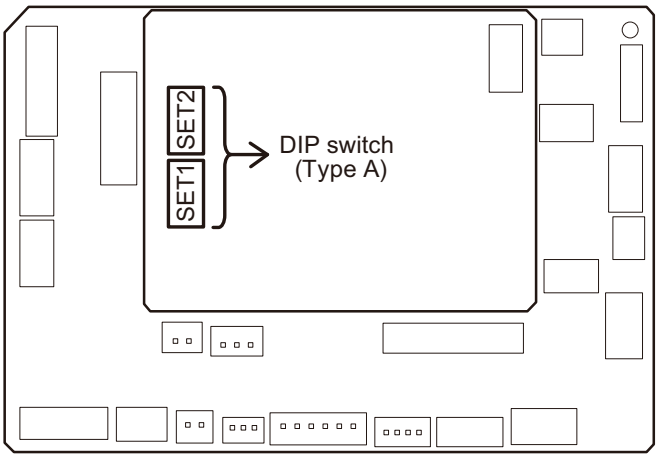

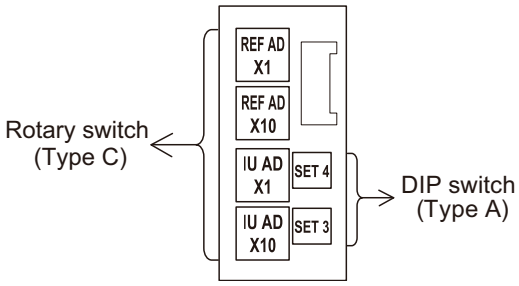

- **Type 8:**

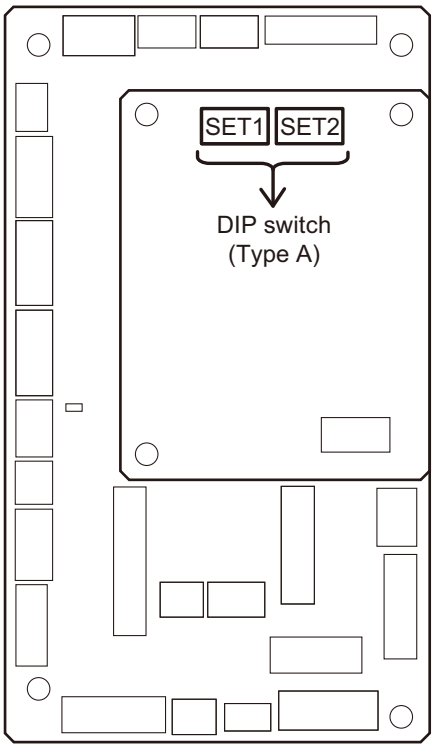

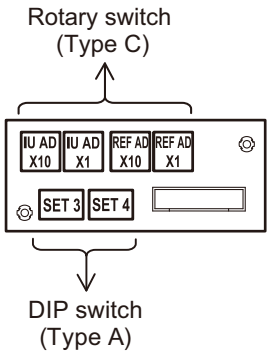

FUNCTION SETTINGS

■ Switch type and setting item

DIP switch	Type A	SET1	1	Prohibited (Indoor unit capacity setting)
			2	Prohibited (Indoor unit capacity setting)
			3	Prohibited (Indoor unit capacity setting)
			4	Prohibited (Indoor unit capacity setting)
		SET2	1	Prohibited (Indoor unit capacity setting)
			2	External input select “edge/pulse”
			3	Fan delay switch
			4	Prohibited
		SET3	1	Wireless remote controller custom code switch 1
			2	Wireless remote controller custom code switch 2
			3	Prohibited
			4	Prohibited
		SET4	1	Drainage function switch (Mini duct type and Slim duct type only)
			2	Auto louver grille setting switch (Mini duct type and Slim duct type only)
			3	Prohibited
			4	Prohibited
	Type B	SW1		Remote controller wire type switch
Rotary switch	Type C	IU AD x1		Indoor unit address switch 1
		IU AD x10		Indoor unit address switch 2
		REF AD x1		Refrigerant circuit address switch 1
		REF AD x10		Refrigerant circuit address switch 2
	Type D	RC AD		Remote controller address switch

FUNCTION SETTINGS

FUNCTION SETTINGS

■ DIP switch setting

- **SET1, SET2-1: Indoor unit capacity** (Setting prohibited)

NOTE: DO NOT change these settings at site.

SET1-1	SET1-2	SET1-3	SET1-4	SET2-1	Indoor unit capacity (kW)
Off	Off	Off	Off	On	1.1
Off	Off	Off	Off	Off	2.2
On	Off	Off	Off	Off	2.8
Off	On	Off	Off	Off	3.6
On	On	Off	Off	Off	4.0
Off	Off	On	Off	Off	4.5
On	Off	On	Off	Off	5.6
Off	On	On	Off	Off	7.1
On	On	On	Off	Off	8.0
Off	Off	Off	On	Off	9.0
Off	On	On	Off	On	10.0
On	Off	Off	On	Off	11.2
Off	On	Off	On	Off	12.5
On	On	Off	On	Off	14.0
Off	Off	On	On	Off	18.0
On	Off	On	On	Off	22.4
Off	On	On	On	Off	25.0
On	On	On	On	Off	28.0

- **SET2-2: “Edge” or “Pulse” selection of external input**

SET2-2	External input select	Factory setting
Off	Edge	♦
On	Pulse	

- **SET2-3: Switching of Fan delay function**
  Fan delay is a function to delay the stop of cooling fan when the air conditioner is stopped.
  When auxiliary heater is connected, this switch should be set at “On (Enabled)”. When connecting the auxiliary heater, be careful enough.

SET2-3	Fan delay	Factory setting
Off	Disabled	♦
On	Enabled	

- **SET2-4: Setting prohibited**

SET2-4	Fan delay	Factory setting
Off	Off (Fixed)	♦
On	Setting prohibited	

FUNCTION SETTINGS

- **SET3-1, 3-2: Custom code switching of wireless remote controller**
  This DIP switch sets the custom code of the wireless remote controller of an indoor unit.
  If multiple indoor units are being installed in the same room, switch the custom codes of the corresponding wireless remote controllers in order to prevent their signals from being mixed.
  When switching the custom code of the wireless remote controller of an indoor unit, be sure to also switch the code setting on the paired wireless remote controller at the same time.

SET3-1	SET3-2	Custom code	Factory setting
Off	Off	Type A	♦
On	Off	Type B	
Off	On	Type C	
On	On	Type D	

How to switch the code on the wireless remote controller:

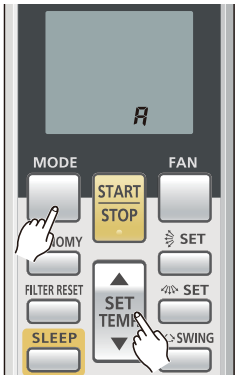

1. Press the MODE button for more than 5 seconds to start the code change.
2. Press the SET TEMP. ▲ or ▼ button to select the desired code.

   → A → B → C → D →

3. Press the MODE button again to complete the code change.

- **SET3-3, SET3-4: Setting prohibited**

SET3-3	SET3-4	Factory setting
Off (Fixed)	Off (Fixed)	♦
On (Setting prohibited)	On (Setting prohibited)	

- **SET4-1: Switching of Drainage function** (for Mini duct type and Slim duct type only)
  If the drain pump is not used, this switch should be set at “On (Disabled)”.

SET4-1	Drainage function	Factory setting
Off	Enabled	♦
On	Disabled	

NOTE: When set to “On” (Drainage function: Disabled), be careful not to cause water leakage by the drainage.

- **SET4-2: Switching of Auto louver grille setting** (for Mini duct type and Slim Duct type only)
  When Auto louver grille kit (optional parts) is attached, this switch should be set “On (Enabled)”.

SET4-2	Auto louver grille setting	Factory setting
Off	Disabled	♦
On	Enabled	

- **SET4-3: Setting prohibited**

SET4-3	Factory setting
Off (Fixed)	♦
On (Setting prohibited)	

FUNCTION SETTINGS

- **SET4-4: Setting prohibited**

SET4-4	Factory setting
Off (Fixed)	♦
On (Setting prohibited)	

- **SW1: Switching of Remote controller wire type setting**

SW1	Remote controller wire type	Factory setting
2WIRE	2-wire	♦
3WIRE	3-wire	

FUNCTION SETTINGS

■ Rotary switch setting

- **IU AD (Indoor unit address): Switching of Indoor unit address**
  Sets the indoor unit addresses. For details, refer to the indoor unit address conversion table in "Address setting" on page 07-4.

Rotary switch	Description	Remarks	Factory setting
IU AD x1	Indoor unit address Switch 1	Indoor unit address (the first digit)	0
IU AD x10	Indoor unit address Switch 2	Indoor unit address (the second digit)	0

- **REF AD (Refrigerant circuit address): Switching of Refrigerant circuit address**
  Sets the refrigerant circuit addresses. For details, refer to the refrigerant circuit address conversion table in "Address setting" on page 07-4.

Rotary switch	Description	Remarks	Factory setting
REF AD x1	Refrigerant circuit address Switch 1	Refrigerant circuit address (the first digit)	0
REF AD x10	Refrigerant circuit address Switch 2	Refrigerant circuit address (the second digit)	0

- **RC AD (Remote controller address): Switching of Remote controller address**
  When the indoor unit is wired by remote controller group, to identity the indoor unit in the remote controller group, the number (remote controller address) in the remote controller group is set.
  - **3-wire type** (only for manual address setting)
    Set the remote controller address in order of 0, 1, 2, 3..., 15. (Blank is not allowed.)

Rotary switch	Description	Remarks	Factory setting
RC AD	Remote controller address	Remote controller address	0

  - **2-wire type**
    It can choose either automatic address setting or manual address setting.
    - When setting the automatic address:
      Set the remote controller address at “0 (Factory setting)” only.
    - When setting the manual address:
      Set the remote controller address in the 1, 2, 3..., 15.

Rotary switch	Description	Remarks	Factory setting
RC AD	Remote controller address	Remote controller address	0

NOTE: When performing manual address setting, this setting cannot be set at “0 (Factory setting)”.

FUNCTION SETTINGS

2-3. Setting by service tool (UTY-ASGXZ1)

■ Remote setting

Function setting of the indoor unit and function setting defined as Function “F2” on the outdoor unit can be changed remotely. (Some settings are not available.)
The processed result can also be output to a CSV file.

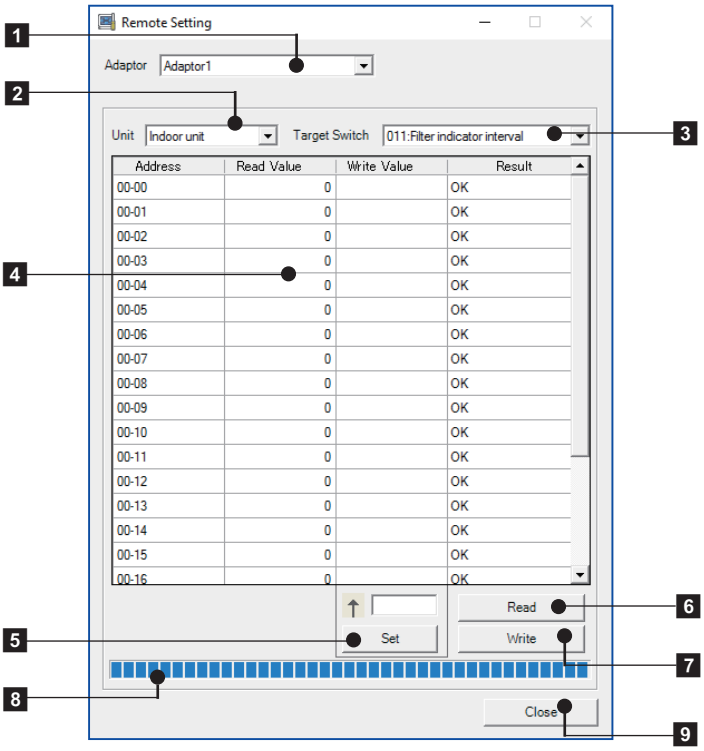

1 Adapter selection

Selects the transmission adapter that connects the system containing units perform processing.

2 Unit type

Selects the unit type of the indoor unit and the outdoor unit that perform processing.

3 Target switch

Displays the target item of the local function setting. (No. + name)

4 Unit list

Displays a list of addresses (Refrigerant no. - Unit no.) of the target unit selected in 1 and 2.
In addition, multiple units can be handled simultaneously by arbitrary selection (background blue color) for target unit selection.This list displays the following information, in addition to address.

- Read value
  Displays the value of the item selected by combo box in 3 acquired from the target unit.
- Write value
  Displays the set value specified in 5.
- Result
  Displays the result (OK/NG) when 6 and 7 are pressed. When outside the target, ‘--’ is displayed.

FUNCTION SETTINGS

5 Write value input

The value input here is set at the write value field of the unit selected in 4.This input value becomes the setting change value of the item selected in 3.

NOTES:

- For the set value of each function setting, refer to "Function details" on page 07-108, or the Installation manual of the indoor unit or the outdoor unit.
- When clearing the write value, click the Set button with the field blank after selecting the target unit.

6 Read button

Acquires the value of the item selected in 3 from the unit selected in 4, and displays it at the read value field in 4. After the acquirement of the value is completed, subsequent processing can be canceled by clicking the button again.

7 Write button

Performs setting of the value input at the write value field of 4. for the unit selected in 4.

Thereafter, the setting contents result is displayed at the read value field of 4 for check use.

After the setting is completed, subsequent processing can be canceled by clicking the button again.

8 Progress bar

Displays the processing progress of 6 or 7.

9 Close button

Closes this screen (Remote Setting screen). However, when read/write processing for unit was performed, confirmation dialog box opens to confirm whether to save the data to a CSV file.

NOTES:

- When both remote setting of the outdoor unit and the setting from the push button on the PCB of the outdoor unit are performed, the setting performed later will be valid.
- When the remote setting of the outdoor unit and the setting from the push button on the PCB of the outdoor unit are performed at the same time, the remote setting will be invalid. Check that the push button is not used before starting the remote setting.

FUNCTION SETTINGS

■ Remote perform function

Function defined as “F3” on the outdoor unit can be performed remotely.

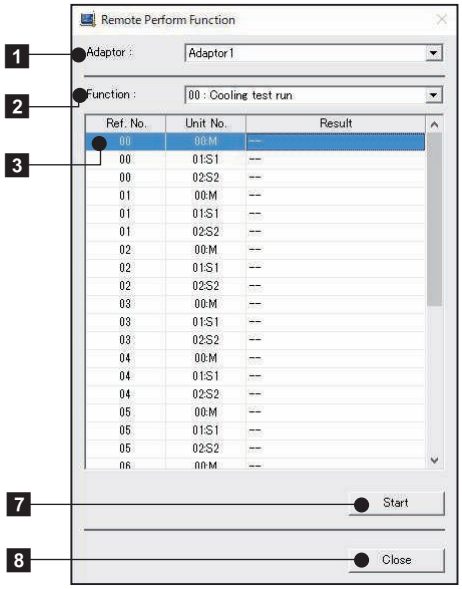

When selecting the function applied to multiple outdoor units

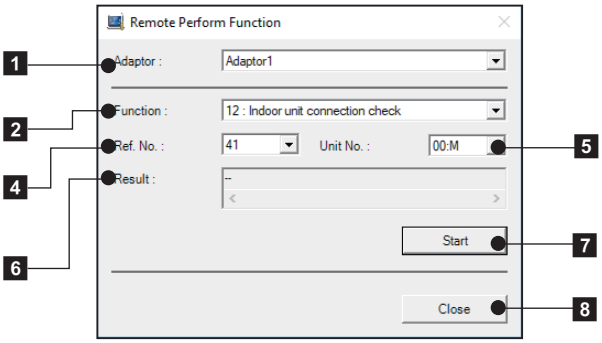

When selecting the function applied to one outdoor unit

1 Adapter name selection

Selects the transmission adapter that connects the target unit.

2 Function selection

Selects the function to be operated remotely. The window display varies depending on the selected function.

3 Outdoor unit selection (for the function applied to multiple outdoor units)

Specifies the outdoor unit to be operated remotely. After the function is performed, the result is displayed.

4 Refrigerant system address selection

Specifies the refrigerant system address which the outdoor unit to be operated remotely belongs to.

5 Outdoor unit selection

Specifies the outdoor unit to be operated remotely.

6 Result (for the function applied to one outdoor unit)

After the function is performed, the result is displayed.

7 Start button

Performs setting of the value input at the write value field of 4 for the unit selected in 4.

Thereafter, the setting contents result is displayed at the read value field of 4 for check use.

After setting is completed, subsequent processing can be canceled by clicking the button again.

FUNCTION SETTINGS

8 Close button

Closes this screen. (Remote Perform Function screen)

NOTES:

- Even if you perform another function by the remote perform function or the push button on the PCB of the outdoor unit while a function is operating, the function may not be changed.
- When the remote perform function and the function by the push button on the PCB of the outdoor unit are performed at the same time, the remote perform function will not be operated. Check that the push button is not used before starting the remote perform function.

FUNCTION SETTINGS

2-4. Indoor unit (setting by wireless remote controller)

⚠ CAUTION

This setting changes the function settings used to control the indoor unit according to the installation conditions. Incorrect settings can cause a product malfunction.

- After the power is turned on, perform the “Function setting” according to the installation conditions using the remote controller.
- The settings may be selected between the following two: Function number or Setting number.
- Settings will not be changed if invalid numbers or setting numbers are selected.

■ Preparation

1. Before turning on the power of indoor unit, reconfirm following items:
   - Piping air tight test and vacuuming have been performed firmly.
   - There is no wiring mistake.

2. Turn on the power of indoor units.
   By turning on the power, the indoor units initialize EEV.

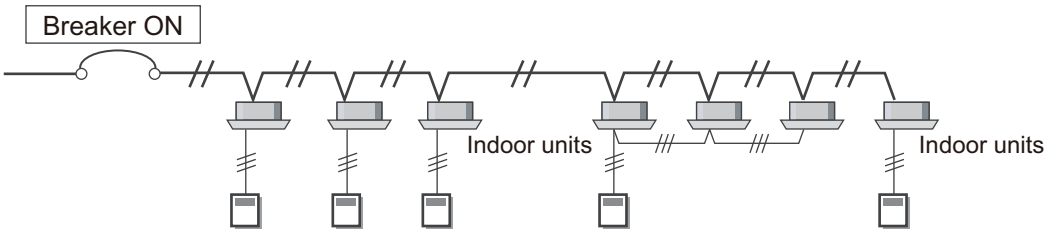

Before proceeding the function setting, refer to the following sections and perform necessary steps:

- "Button name and function" on page 07-17
- "Entering function setting mode" on page 07-18
- "Selection and confirmation of custom code" on page 07-18

■ Indoor unit function setting

1. Press the MODE button to enter the function setting mode.

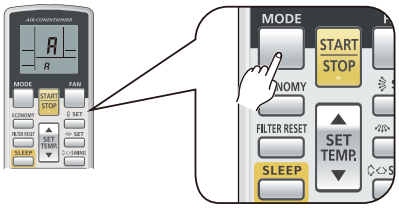

2. Press the SET TEMP.▲ or ▼ button to adjust the function number.
   Each time the MODE button is pressed, it switches between the left digit and the right digit.

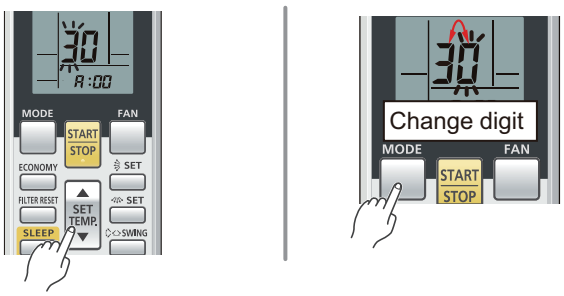

FUNCTION SETTINGS

3. Press the FAN button to proceed to number setting. To return to the function number adjustment, press the FAN button again.

4. Press the SET TEMP.▲ or ▼ button to adjust the setting number.
Each time the MODE button is pressed, it switches between the left digit and the right digit.

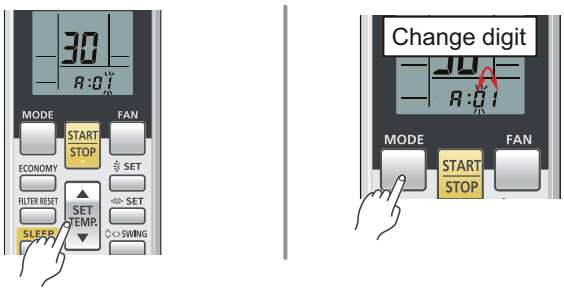

5. Send the information by pressing the START/STOP button once. A beeping sound (2 short beeps, 1 long beep, 2 short beeps, and 1 long beep) will be emitted if the command is accepted.

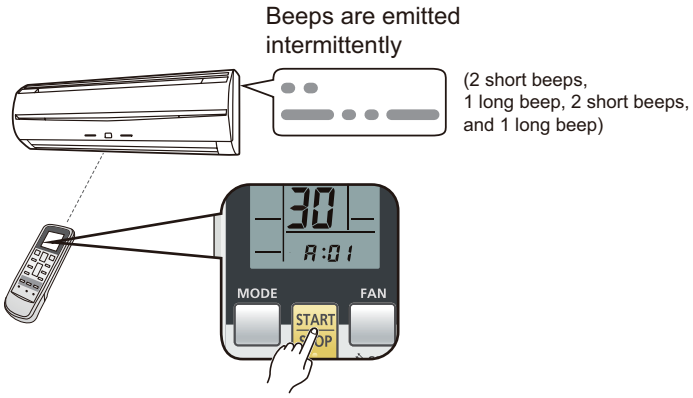

In the following case, the setting signal will not be accepted correctly and 5 short beeps will be emitted:

- The function setting number is set out of range

FUNCTION SETTINGS

6. Indoor unit lamps will indicate the function setting number as follows:

Case 1: When setting number is one digit

Indoor unit lamps will indicate the function setting number on the OPERATION (Green) lamp, TIMER (Orange) lamp, and FILTER (Red) lamp.

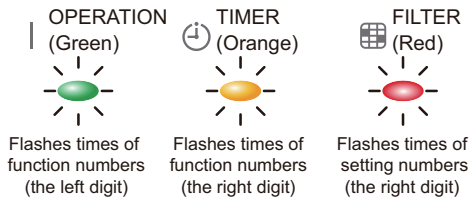

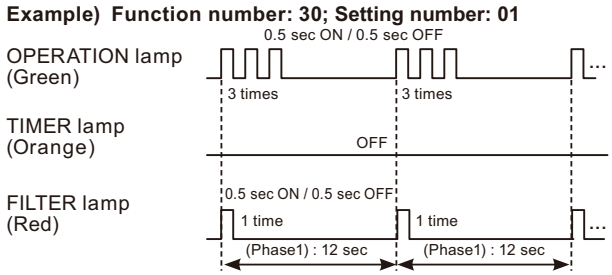

When the number setting is “0”, TIMER lamp and FILTER lamp will not flash.

Case 2: When setting number is two digits

Indoor unit lamps will indicate the function setting number on the OPERATION (Green) lamp, TIMER (Orange) lamp, and FILTER (Red) lamp.

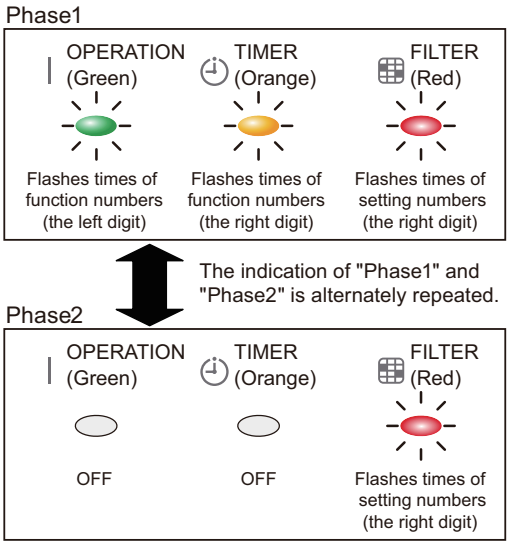

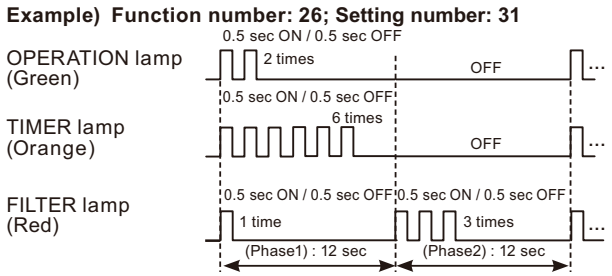

When the number setting is “0”, TIMER lamp and FILTER lamp will not flash.

FUNCTION SETTINGS

RELATED LINKS

"Function details" on page 07-108

■ Confirmation of function setting

To confirm the function setting is properly configured, press the TIMER set (+) button.

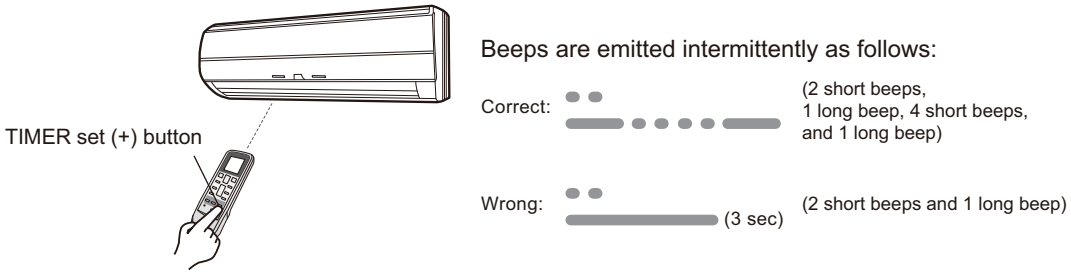

■ Completion of function setting mode

- The position of the MANUAL AUTO button varies depending on the model. For the actual position of the button on each unit, refer to the operation manual.
- If the MANUAL AUTO button is pressed continuously for 10 seconds or more, the error will be displayed. In this case, release the button or turn off the power.

1. Press and hold the MANUAL AUTO button for 3 seconds. The brightness of each LED lamp is darkening though the content of the display does not change.

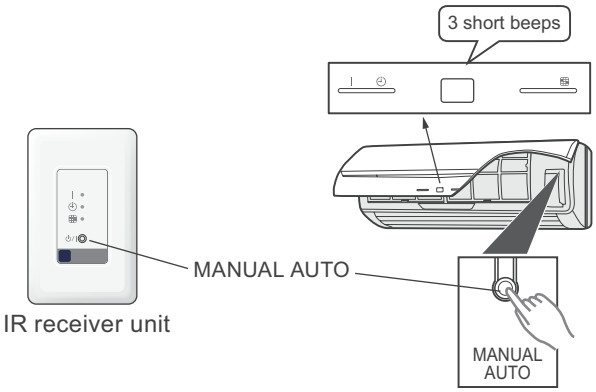

2. Press the RESET button.

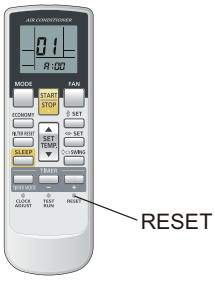

For the custom code setting of b, c, or d, perform the setting after pressing the RESET button.

- After completing the procedure above, no function setting signal is received. If the function setting signal is sent, 5 short beeps will be emitted indicating an error.
- When returning the function setting mode again, press the MANUAL AUTO button for 3 seconds.

■ Reconfirmation of function setting

1. While holding down the FAN and the SET TEMP.▲ buttons, press the RESET button. The function setting mode will be activated.

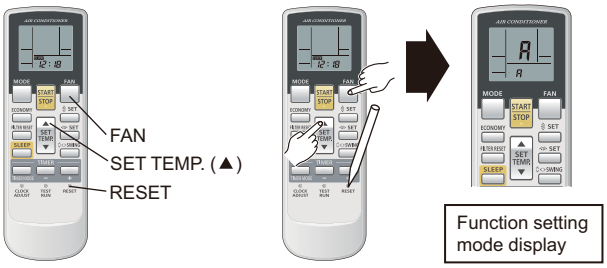

FUNCTION SETTINGS

2. Function number to be confirmed is displayed on the remote controller LCD.
   Press the SET TEMP.▲ or ▼ button to adjust the setting number. Each time the MODE button is pressed, it switches between the left digit and the right digit.
   Press the TIMER set (-) button.

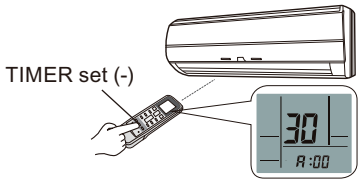

Case1: When setting number is one digit

Example) Function number: 30; Setting number: 01

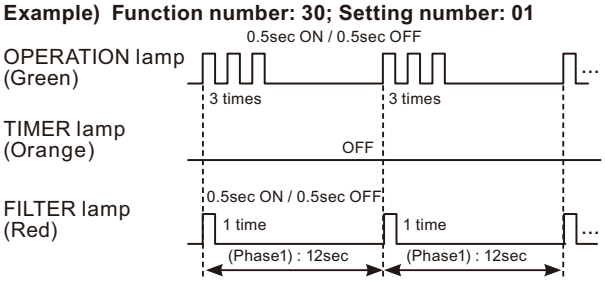

Case2: When setting number is two digits

Example) Function number: 26; Setting number: 31

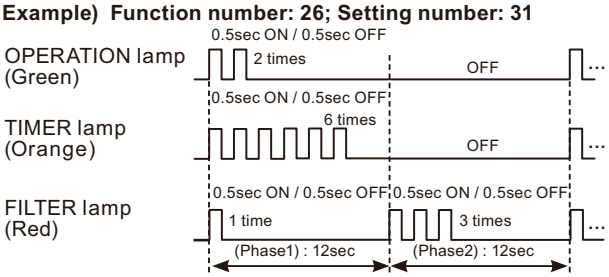

FUNCTION SETTINGS

FUNCTION SETTINGS

■ Setting up each indoor unit

Setting must be performed on each indoor unit by repeating following procedures.

- "Preparation" on page 07-87
- "Indoor unit function setting" on page 07-87
- "Confirmation of function setting" on page 07-89
- "Completion of function setting mode" on page 07-90
- "Reconfirmation of function setting" on page 07-90

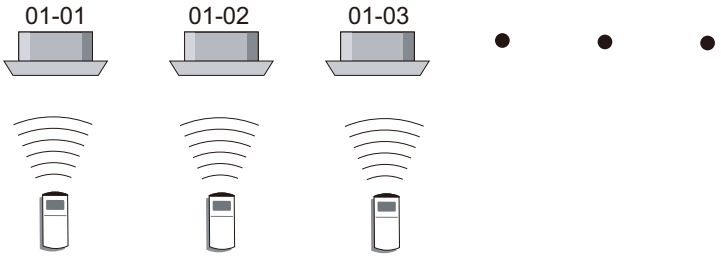

When the custom code is different to "A" (factory setting), only following procedures need to be performed.

- "Preparation" on page 07-87
- "Completion of function setting mode" on page 07-90
- "Reconfirmation of function setting" on page 07-90

■ Resetting the power after setting up all indoor units

Important:

- If the reset is not performed, function cannot be read correctly.
- After all the functions have been set, the circuit breaker needs to be switched off for at least 2 minutes.
  - After the 2 minutes has passed, power can be restored.
  - The set function is stored in the PCB and will remain in memory even when the power of indoor unit is turned off.
    However setting function is effective after disconnecting the power supply and then reconnecting it.
- Record the latest configuration of the indoor unit function setting on a label, and put the label on the unit so it can be used for after-sales service operations.

Number “0” setting will not be indicated on TIMER lamp and FILTER lamp.

Once the RESET button is pressed on the remote controller, the operation mode will be set to the AUTO MODE.

Adjust the operation mode to either cooling or heating before starting the operation of the air conditioner.

NOTE: If custom code other than "A" is set, the remote control must be set accordingly to the indoor unit setting.

FUNCTION SETTINGS

2-5. Indoor unit (setting by UTY-RNK∗)

⚠ CAUTION

This setting changes the function settings used to control the indoor unit according to the installation conditions. Incorrect settings can cause a product malfunction.

- After the power is turned on, perform the “Function setting” according to the installation conditions using the remote controller.
- The settings may be selected between the following two: Function number or Setting number.
- Settings will not be changed if invalid numbers or setting numbers are selected.
- This function is not available on the slave units.

■ Preparation

1. If multiple indoor units are connected to a single wired remote controller, set up the remote controller address (RC AD) manually on the indoor units PCBs by referring "Manual address setting method" on page 07-9.

Example: When 4 indoor units are connected

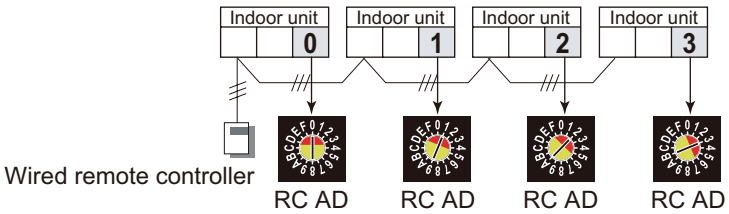

2. Before turning on the power of indoor unit, reconfirm following items:
   - Piping air tight test and vacuuming have been performed firmly.
   - There is no wiring mistake.

3. Turn on the power of indoor units.
   By turning on the power, the indoor units initialize EEV.

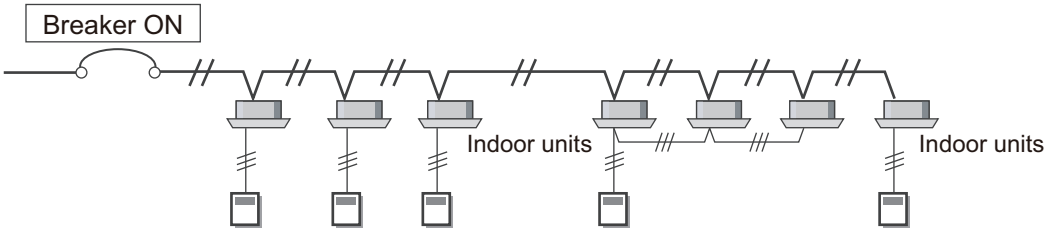

Before proceeding the function setting, refer to the following sections and perform necessary steps:

- "Button name and function" on page 07-28
- "Entering setting mode" on page 07-28

■ Indoor unit function setting

1. In the initial display of setting mode, by pressing the SET BACK button, select a remote controller address. (Select the indoor unit you want to operate.)

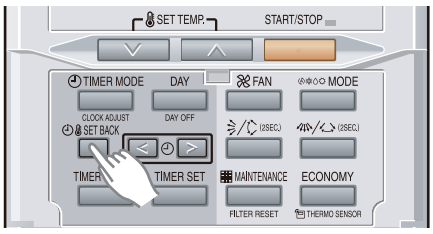

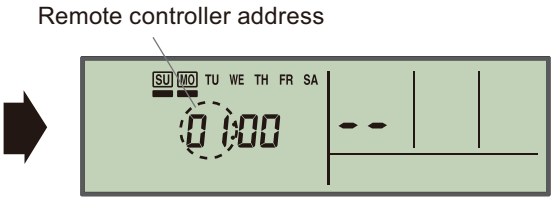

Example: When remote controller address “01” is selected

FUNCTION SETTINGS

2. Select the function number by pressing the SET TIME “<” button or SET TIME “>” button.

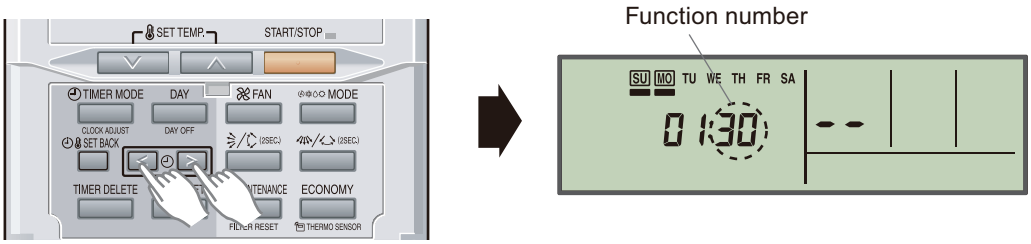

3. Select the setting number by pressing the SET TEMP. “∨” or the SET TEMP. “∧” button. The setting number indication flashes during number selection setting.

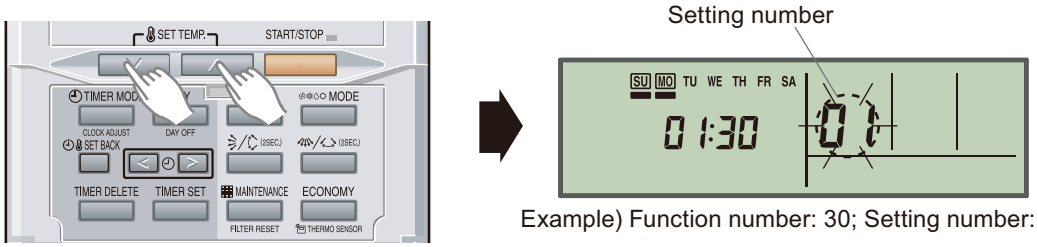

Example) Function number: 30; Setting number: 01

4. Confirm the setting by pressing the TIMER SET button. The data will be transferred to the indoor unit.

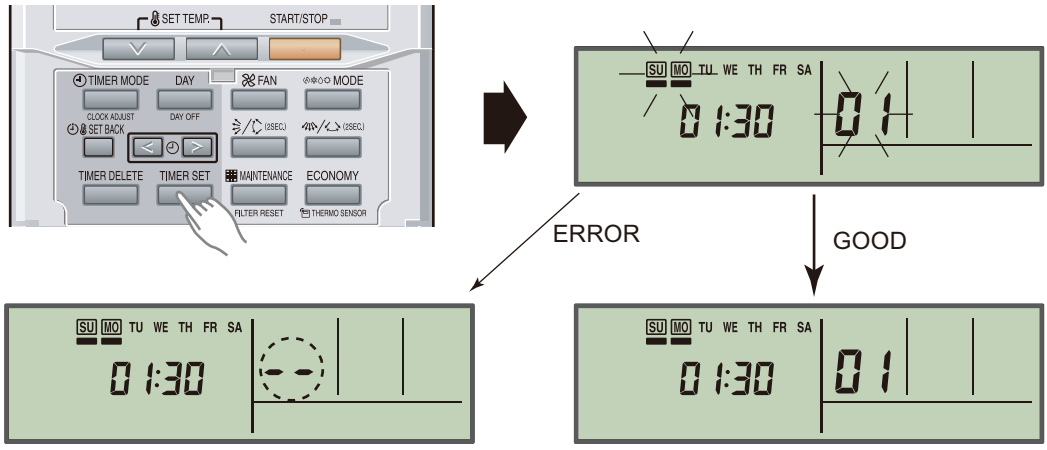

- When the address data is properly set up on the indoor unit, the flashing of the number stops and the set number will be displayed. (GOOD)
- When the address data is not set up correctly, “- -” is displayed. (ERROR) Back to the previous step and set up the indoor unit address data again.

RELATED LINKS

"Completion of setting mode" on page 07-31
"Function details" on page 07-108

FUNCTION SETTINGS

■ Setting up each indoor unit

Setting must be performed on each indoor unit by repeating following procedures.

- "Preparation" on page 07-93
- "Indoor unit function setting" on page 07-93
- "Completion of setting mode" on page 07-31

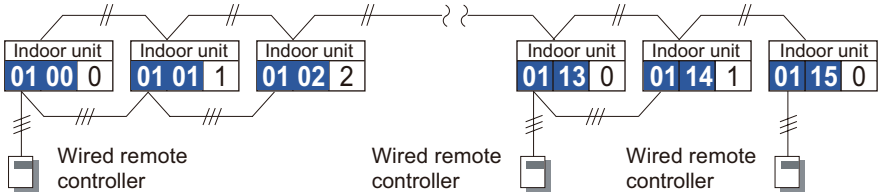

■ Resetting the power after setting up all indoor units

NOTES:

- If the reset is not performed, function cannot be read correctly.
- After all the functions have been set, the circuit breaker needs to be switched off for at least 2 minutes.
  - After the 2 minutes has passed, power can be restored.
  - The set function is stored in the PCB and will remain in memory even when the power of indoor unit is turned off.
    However setting function is effective after disconnecting the power supply and then reconnecting it.
- Record the latest configuration of the indoor unit function setting on a label, and put the label on the unit so it can be used for after-sales service operations.

FUNCTION SETTINGS

2-6. Indoor unit (setting by UTY-RSR∗, UTY-RHR∗)

⚠ CAUTION

This setting changes the function settings used to control the indoor unit according to the installation conditions. Incorrect settings can cause a product malfunction.

- After the power is turned on, perform the “Function setting” according to the installation conditions using the remote controller.
- The settings may be selected between the following two: Function number or Setting number.
- Settings will not be changed if invalid numbers or setting numbers are selected.
- This function is not available on the slave units.
- Before starting the function setting, refer to the indoor unit installation manual and prepare for the setting.
- For details on the function numbers and setting numbers, refer to the indoor unit installation manual.

■ Preparation

1. If multiple indoor units are connected to a single wired remote controller, set up the remote controller address with “Automatic address setting”.

Example: When 4 indoor units are connected

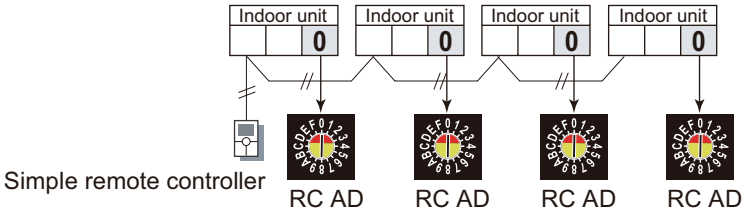

2. Before turning on the power of indoor unit, reconfirm following items:
   - Piping air tight test and vacuuming have been performed firmly.
   - There is no wiring mistake.

3. Turn on the power of indoor units.
   By turning on the power, the indoor units initialize EEV.

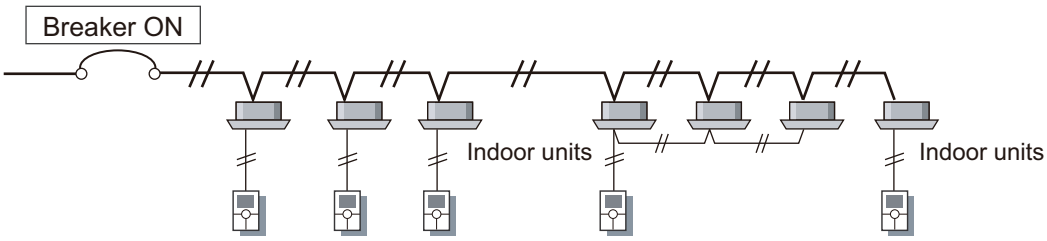

Before proceeding the function setting, refer to the following section and perform necessary steps:

- "Entering setting mode" on page 07-33

FUNCTION SETTINGS

FUNCTION SETTINGS

■ Indoor unit function setting

NOTE: Perform this setting on the master remote controller.

1. While displaying the function setting screen, press the TEMP. "∧" or TEMP. "∨" button to select the 2-wire remote controller address.

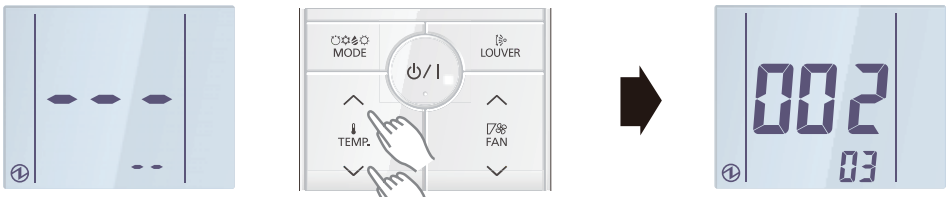

Function setting screen

Example: Selecting the 2-wire remote controller address (002-03)

2. Press the START/STOP⏻/I button to switch to the function number setting.

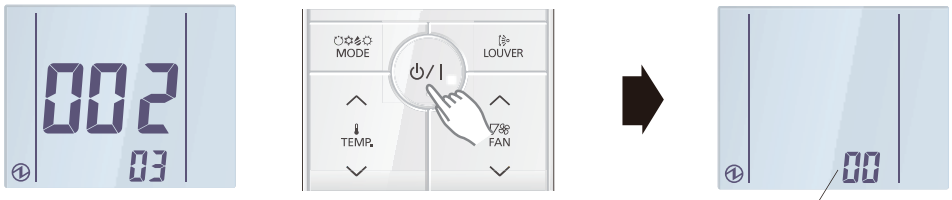

Example: Selecting the 2-wire remote controller address

Function number

3. Press the TEMP. "∧" or TEMP. "∨" button to adjust the function number.

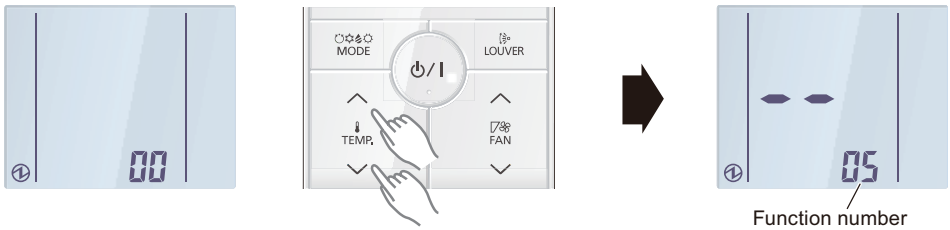

Function number

4. Press the START/STOP⏻/I button to switch to the setting number adjustment.

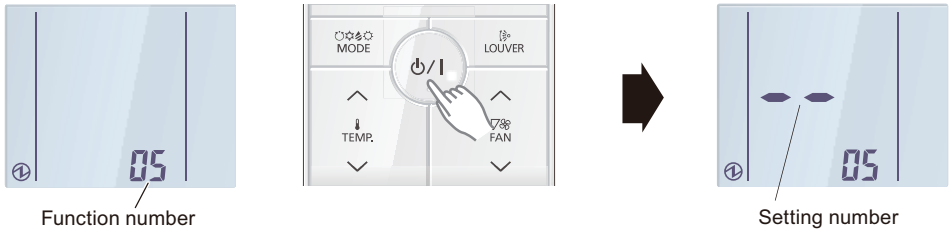

Function number

Setting number

5. Press the TEMP. "∧" or TEMP. "∨" button to adjust the setting number.

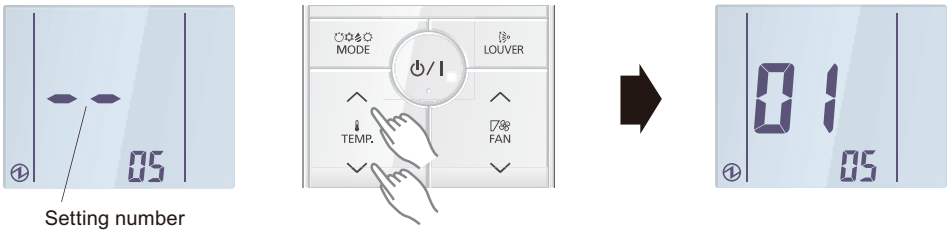

Setting number

6. Press the START/STOP⏻/I button. The data will be transferred to the indoor unit, and the setting result will be displayed.

FUNCTION SETTINGS

FUNCTION SETTINGS

7. To return to the 2-wire remote controller address selection screen, press the START/STOP⏻/I button. If setting has been completed, press FAN "∨" button to return to the Menu 2-F1 item selection screen.

When returning to the 2-wire remote controller address selection screen

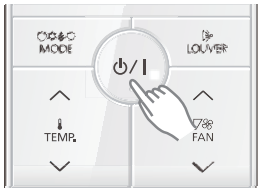

Setting completed and returning to the Menu 2-F1 item selection screen

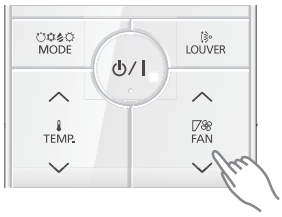

RELATED LINKS

"Completion of setting mode" on page 07-37
"Function details" on page 07-108

■ Setting up each indoor unit

Setting must be performed on each indoor unit by repeating following procedures.

- "Preparation" on page 07-96
- "Indoor unit function setting" on page 07-97
- "Completion of setting mode" on page 07-37

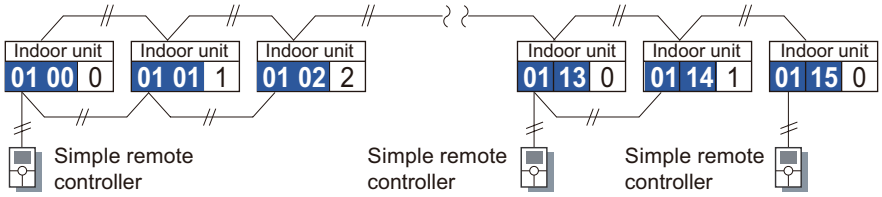

■ Resetting the power after setting up all indoor units

NOTES:

- If the reset is not performed, function cannot be read correctly.
- After all the functions have been set, the circuit breaker needs to be switched off for at least 2 minutes.
  - After the 2 minutes has passed, power can be restored.
  - The set function is stored in the PCB and will remain in memory even when the power of indoor unit is turned off.
    However setting function is effective after disconnecting the power supply and then reconnecting it.
- Record the latest configuration of the indoor unit function setting on a label, and put the label on the unit so it can be used for after-sales service operations.

FUNCTION SETTINGS

2-7. Indoor unit (setting by UTY-RSK∗, UTY-RHK∗)

⚠ CAUTION

This setting changes the function settings used to control the indoor unit according to the installation conditions. Incorrect settings can cause a product malfunction.

- After the power is turned on, perform the “Function setting” according to the installation conditions using the remote controller.
- The settings may be selected between the following two: Function number or Setting number.
- Settings will not be changed if invalid numbers or setting numbers are selected.
- This function is not available on the slave units.

■ Preparation

1. If multiple indoor units are connected to a single simple remote controller, set up the remote controller address (RC AD) manually on the indoor units PCBs by referring "Manual address setting method" on page 07-9.

Example: When 4 indoor units are connected

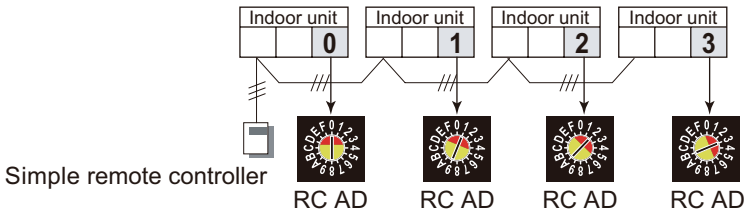

2. Before turning on the power of indoor unit, reconfirm following items:
   - Piping air tight test and vacuuming have been performed firmly.
   - There is no wiring mistake.

3. Turn on the power of indoor units.
   By turning on the power, the indoor units initialize EEV.

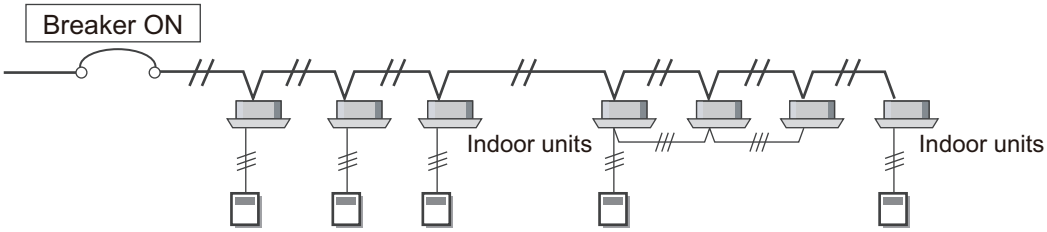

Before proceeding the function setting, refer to the following sections and perform necessary steps:

- "Button name and function" on page 07-40
- "Entering setting mode" on page 07-40

FUNCTION SETTINGS

FUNCTION SETTINGS

■ Indoor unit function setting

1. In initial display of the setting mode, by pressing SET TEMP. "▲" button or SET TEMP. "▼" button, select a remote controller address. (Select the indoor unit you want to operate.)

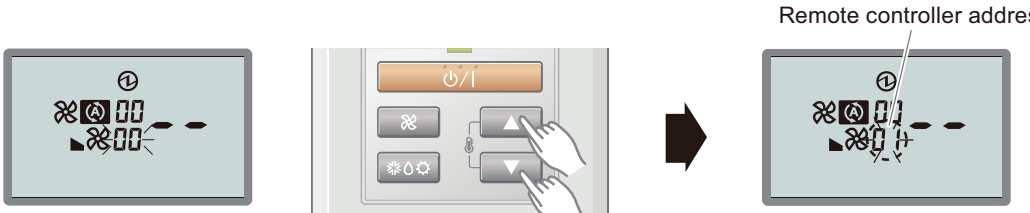

Initial display of address setting mode

Example: When remote controller address "01" is selected

2. Press the FAN button. "Function number" indicator flashes.

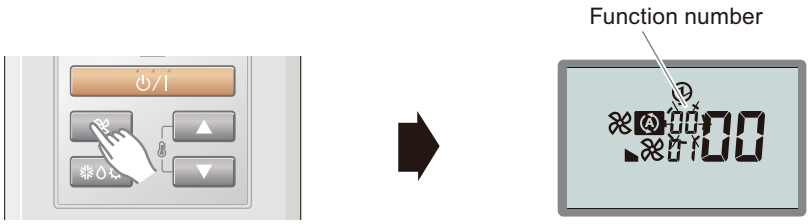

3. Set up the function number by pressing SET TEMP. "▲" button or SET TEMP. "▼" button.

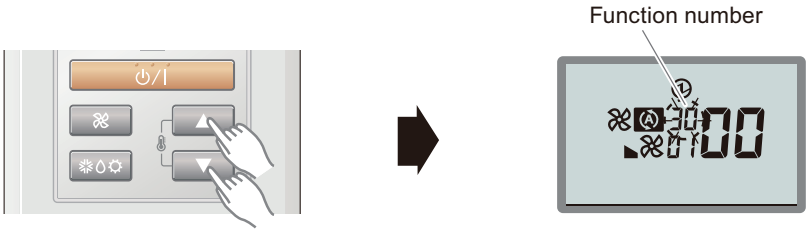

4. Press the FAN button. "Setting number" indicator flashes.

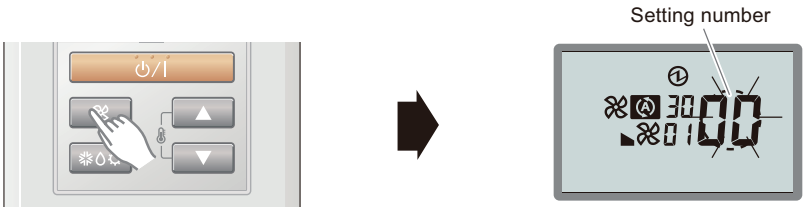

5. Set up the setting number by pressing SET TEMP. "▲" button or SET TEMP. "▼" button.

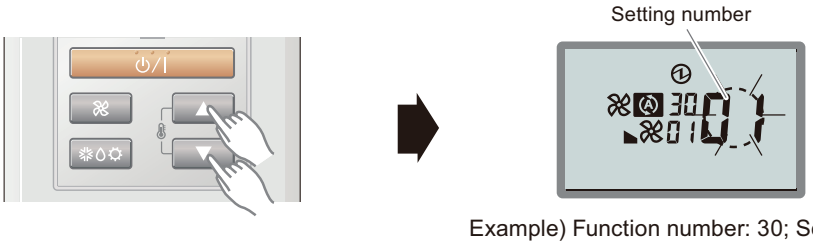

Example) Function number: 30; Setting number: 01

FUNCTION SETTINGS

FUNCTION SETTINGS

6. Confirm the setting by pressing the START/STOP⏻/I button. The data will be transferred to the indoor unit.

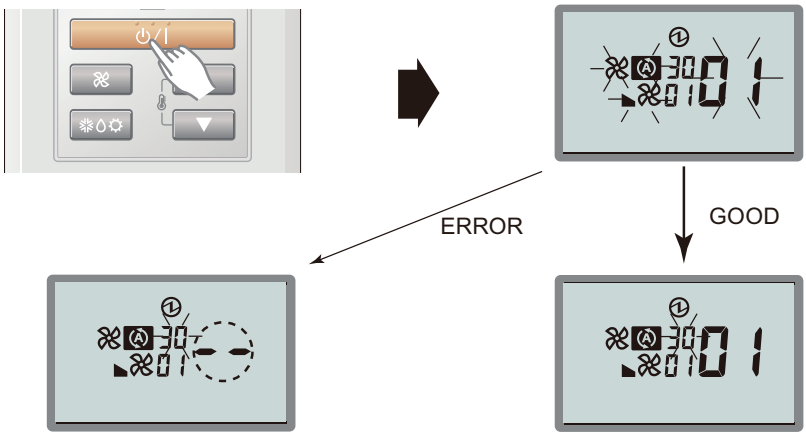

- When the setting is properly set up on the indoor unit, the set number will be displayed. (GOOD)
- When the setting is not set up correctly, “- -” is displayed. (ERROR) Back to the previous step and perform the setting again.

RELATED LINKS

"Completion of setting mode" on page 07-44
"Function details" on page 07-108

■ Setting up each indoor unit

Setting must be performed on each indoor unit by repeating following procedures.

- "Preparation" on page 07-99
- "Indoor unit function setting" on page 07-100

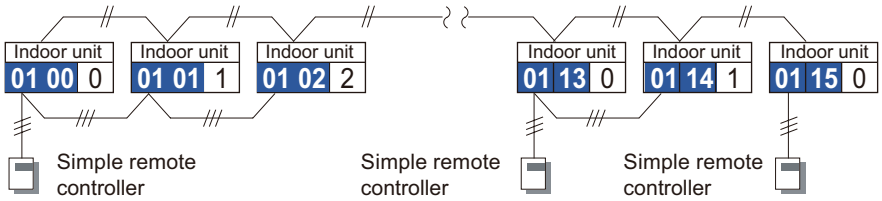

■ Resetting the power after setting up all indoor units

NOTES:

- If the reset is not performed, function cannot be read correctly.
- After all the functions have been set, the circuit breaker needs to be switched off for at least 2 minutes.
  - After the 2 minutes has passed, power can be restored.
  - The set function is stored in the PCB and will remain in memory even when the power of indoor unit is turned off.
    However setting function is effective after disconnecting the power supply and then reconnecting it.
- Record the latest configuration of the indoor unit function setting on a label, and put the label on the unit so it can be used for after-sales service operations.

FUNCTION SETTINGS

2-8. Indoor unit (setting by UTY-RNR∗Z∗)

⚠ CAUTION

This setting changes the function settings used to control the indoor unit according to the installation conditions. Incorrect settings can cause a product malfunction.

- After the power is turned on, perform the “Function setting” according to the installation conditions using the remote controller.
- The settings may be selected between the following two: Function number or Setting number.
- Settings will not be changed if invalid numbers or setting numbers are selected.
- This function is not available on the slave units.

■ Preparation

1. If multiple indoor units are connected to a single wired remote controller, set up the remote controller address with “Automatic address setting”.

Example: When 4 indoor units are connected

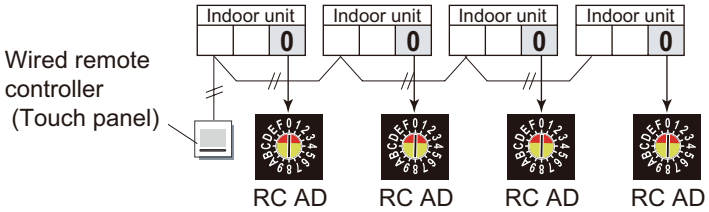

2. Before turning on the power of indoor unit, reconfirm following items:
   - Piping air tight test and vacuuming have been performed firmly.
   - There is no wiring mistake.

3. Turn on the power of indoor units.
   By turning on the power, the indoor units initialize EEV.

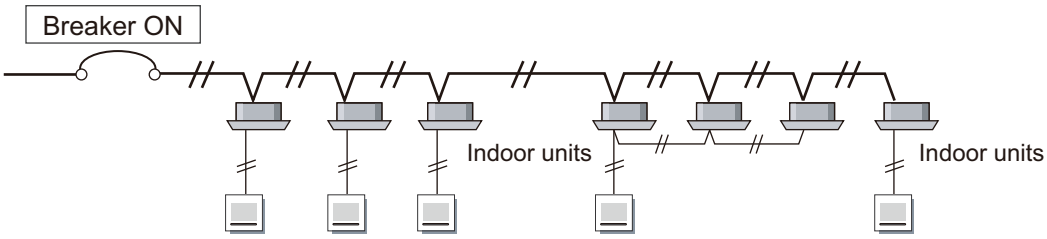

Before proceeding the function setting, refer to the following sections and perform necessary steps:

- "Entering setting mode" on page 07-46
- "Entering setting mode" on page 07-28

■ Indoor unit function setting

1. Touch “Address” on the Function Setting screen.

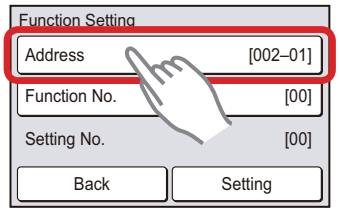

FUNCTION SETTINGS

FUNCTION SETTINGS

2. Address screen is displayed. Select the address of the indoor unit whose function number is to be set by touching "▲" or "▼". When setting at all the indoor units, touch "All".

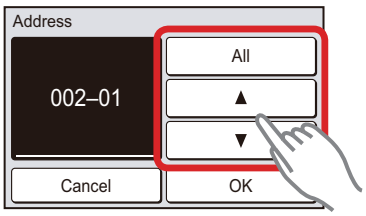

When "OK" is touched, the display returns to the Function Setting screen.

3. Touch "Function No." on the Function Setting screen.

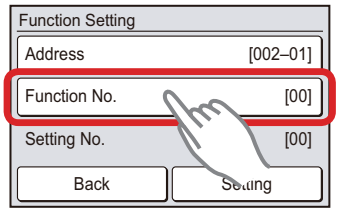

4. Function No. screen is displayed. Set the Function No. by touching "▲" or "▼".

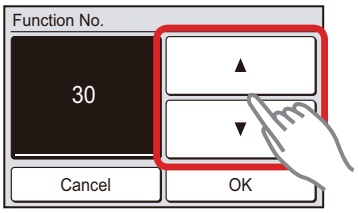

When "OK" is touched, the display returns to the Function Setting screen.

5. Touch "Setting" on the Function Setting screen.

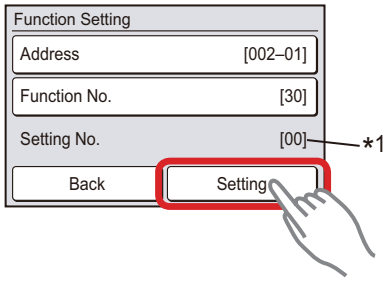

*1: When "All" is selected in step 2, and different Setting No. is set from 2 or more indoor units, "-" is displayed here.

6. Setting screen of "Setting No." is displayed. Set the Setting No. by touching "▲" or "▼".

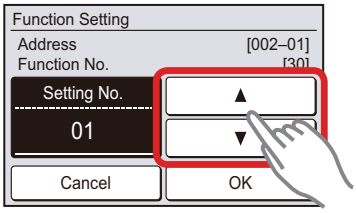

Example) Function number: 30; Setting number:01

When "OK" is touched, the Function Setting verification screen is displayed.

FUNCTION SETTINGS

7. Touch “Yes” on the verification screen.

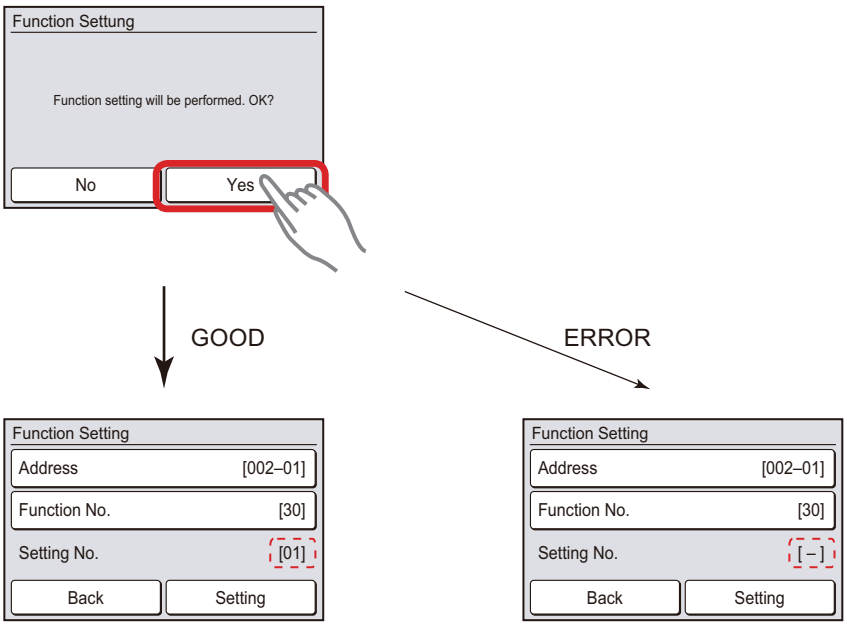

- When the setting is properly set up on the indoor unit, the set number will be displayed in Setting No. (GOOD)
- When the setting is not set up correctly, “-” is displayed in Setting No. (ERROR) Back to the previous step and perform the setting again.

RELATED LINKS

"Completion of setting mode" on page 07-48
"Function details" on page 07-108

■ Setting up each indoor unit

Setting must be performed on each indoor unit by repeating following procedures.

- "Preparation" on page 07-102
- "Indoor unit function setting" on page 07-102

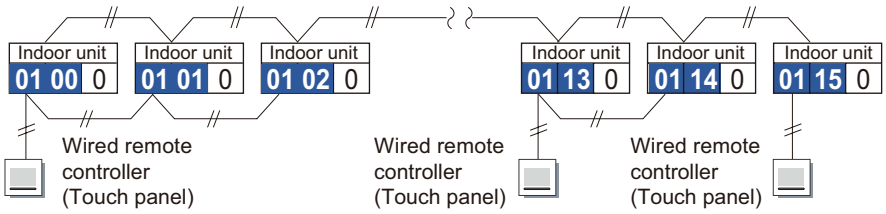

■ Resetting the power after setting up all indoor units

NOTES:

- If the reset is not performed, function cannot be read correctly.
- After all the functions have been set, the circuit breaker needs to be switched off for at least 2 minutes.
  - After the 2 minutes has passed, power can be restored.
  - The set function is stored in the PCB and will remain in memory even when the power of indoor unit is turned off.
    However setting function is effective after disconnecting the power supply and then reconnecting it.
- Record the latest configuration of the indoor unit function setting on a label, and put the label on the unit so it can be used for after-sales service operations.

FUNCTION SETTINGS

2-9. Indoor unit (setting by UTY-RLR∗)

⚠ CAUTION

This setting changes the function settings used to control the indoor unit according to the installation conditions. Incorrect settings can cause a product malfunction.

- After the power is turned on, perform the “Function setting” according to the installation conditions using the remote controller.
- The settings may be selected between the following two: Function number or Setting number.
- Settings will not be changed if invalid numbers or setting numbers are selected.
- This function is not available on the slave units.

■ Preparation

1. If multiple indoor units are connected to a single wired remote controller, set up the remote controller address with “Automatic address setting”.
   Example: When 4 indoor units are connected

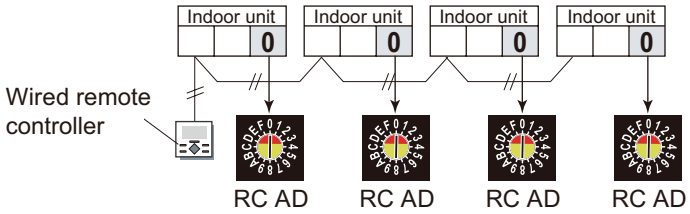

2. Before turning on the power of indoor unit, reconfirm following items:
   - Piping air tight test and vacuuming have been performed firmly.
   - There is no wiring mistake.

3. Turn on the power of indoor units.
   By turning on the power, the indoor units initialize EEV.

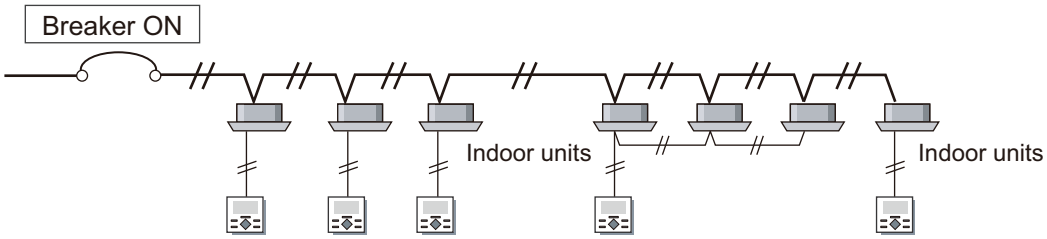

Before proceeding the function setting, refer to the following sections and perform necessary steps:

- "Entering setting mode" on page 07-51

■ Indoor unit function setting

NOTE: Perform this setting on the master remote controller.

1. By pressing the + or - button, select a remote controller address. (Select the indoor unit you want to operate.) Then pres the ENTER button.

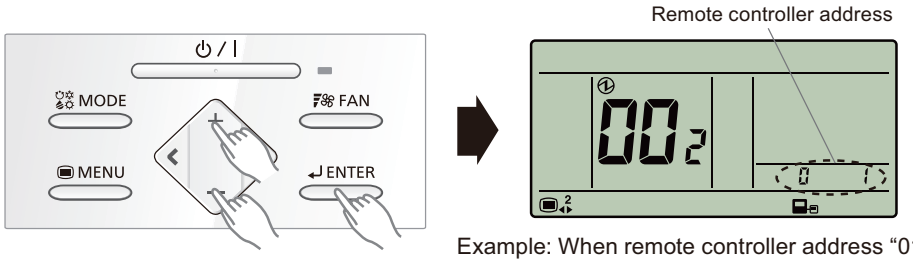

Example: When remote controller address “01” is selected

FUNCTION SETTINGS

2. By pressing the + or - button, select the function number. Then press the ENTER button.

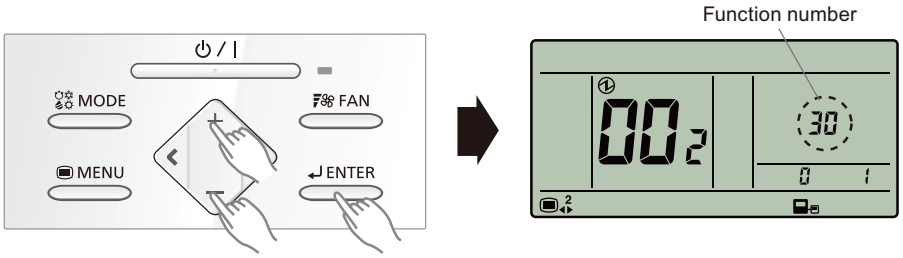

3. By pressing the + or - button, select the setting number.

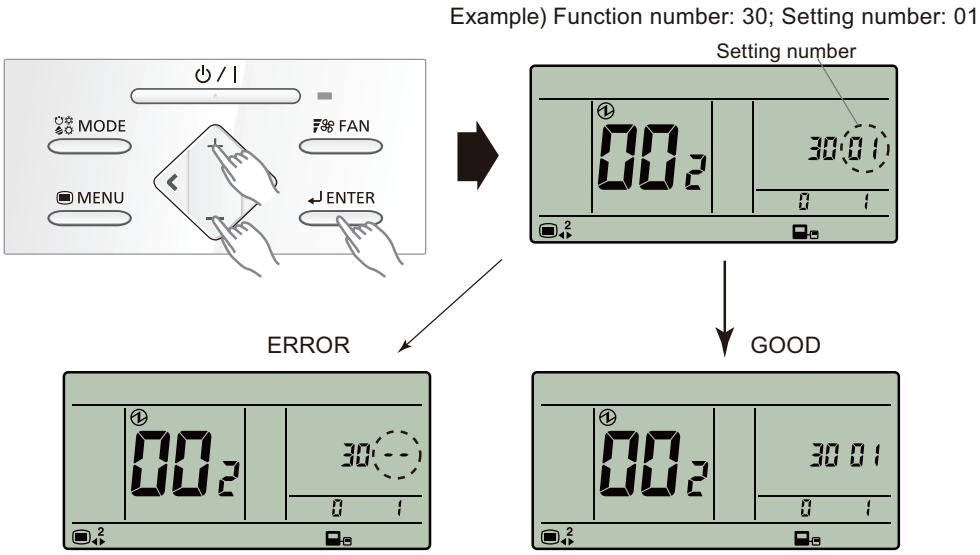

- When the address data is properly set up on the indoor unit, the set number will be displayed. (GOOD)
- When the address data is not set up correctly, "- -" is displayed. (ERROR) Back to the previous step and perform the setting again.

4. To return to the address selection screen, press the ENTER button. If setting has been completed, press MENU button to return to the Menu 2 item selection screen.

RELATED LINKS

"Completion of setting mode" on page 07-53
"Function details" on page 07-108

■ Setting up each indoor unit

Setting must be performed on each indoor unit by repeating following procedures.

- "Preparation" on page 07-105
- "Indoor unit function setting" on page 07-105

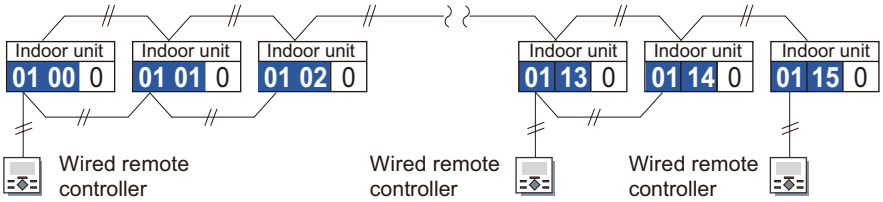

FUNCTION SETTINGS

■ Resetting the power after setting up all indoor units

NOTES:

- If the reset is not performed, function cannot be read correctly.
- After all the functions have been set, the circuit breaker needs to be switched off for at least 2 minutes.
  - After the 2 minutes has passed, power can be restored.
  - The set function is stored in the PCB and will remain in memory even when the power of indoor unit is turned off.
    However setting function is effective after disconnecting the power supply and then reconnecting it.
- Record the latest configuration of the indoor unit function setting on a label, and put the label on the unit so it can be used for after-sales service operations.

FUNCTION SETTINGS

2-10. Function details

Function	Function number	Setting number		Factory setting	Details
Filter indicator interval	11	00	Standard	♦	Adjusts the filter cleaning interval notification. If the notification is too early, change to setting “01”. If the notification is too late, change to setting “02”.
		01	Longer		
		02	Shorter		
Filter indicator action	13	00	Enable	♦	Enables or disables the filter indicator. Setting “02” is for use with a central remote controller.
		01	Disable		
		02	Display only on central remote controller		
Ceiling airflow	20	00	Standard	♦	Regulates the airflow according to the needs of the installation location. When set to 01, the air flow will be stronger. (Cassette type only)
		01	High ceiling		
Vertical airflow direction	23	00	Standard	♦	Adjusts the vertical airflow direction. All airflow direction louvers are adjusted together. (Cassette type only)
		01	Raise		
Horizontal swing airflow direction	24	00	Standard	♦	Adjusts the horizontal swing airflow direction. (For horizontal swing equipped models)
		01	Left half		
		02	Right half		
Static pressure	26	00	SP mode 00		Range of static pressure mode varies on the indoor unit models. (For details, refer to "Range of static pressure mode by model" on page 07-111). As for the characteristics of each indoor unit, refer to "Fan performance curve" in Chapter 4. INDOOR UNITS on page 04-193.
		01	SP mode 01		
		02	SP mode 02		
		03	SP mode 03		
		04	SP mode 04		
		05	SP mode 05		
		06	SP mode 06		
		07	SP mode 07		
		08	SP mode 08		
		09	SP mode 09		
		10	SP mode 10		
		11	SP mode 11		
		12	SP mode 12		
		13	SP mode 13		
		14	SP mode 14		
		15	SP mode 15		
		16	SP mode 16		
		17	SP mode 17		
		18	SP mode 18		
		19	SP mode 19		
		20	SP mode 20		
		21	SP mode 21		
		22	SP mode 22		
		23	SP mode 23		
		24	SP mode 24		
		25	SP mode 25		
		26	SP mode 26		
		27	SP mode 27		
		28	SP mode 28		
		29	SP mode 29		
		31	Normal SP	♦	

FUNCTION SETTINGS

Function	Function number	Setting number		Factory setting	Details
Installation position setting	27	00	Center	♦	Switch the airflow direction based on the installation position of the 3D flow cassette. 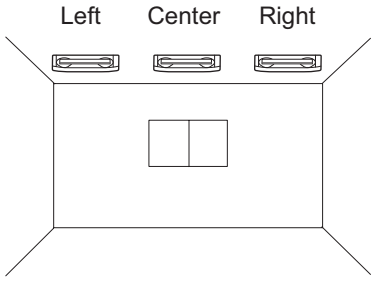
		01	Right		
		02	Left		
Cool air temperature trigger	30	00	Standard	♦	Adjusts the cool air trigger temperature. To make the trigger temperature lower than the standard temperature, use setting “01”. To make the trigger temperature higher than the standard temperature, use setting “02”.
		01	Adjust (1)		
		02	Adjust (2)		
Heat air temperature trigger	31	00	Standard	♦	Adjusts the heat air trigger temperature. To make the trigger temperature 6 degrees C lower than the standard temperature, use setting “01”. To make the trigger temperature 4 degrees C lower than the standard temperature, use setting “02”. To make the trigger temperature higher than the standard temperature, use setting “03”.
		01	Adjust (1)		
		02	Adjust (2)		
		03	Adjust (3)		
Auto restart	40	00	Enable		Enables or disables automatic system restart after a power outage. **NOTE:** Auto restart is an emergency function such as for power failure etc. Do not start and stop the indoor unit by this function in normal operation. Be sure to operate by the control unit, converter or external input device.
		01	Disable	♦	
Cool-air prevention	43	00	Super low	♦	Restrains the cold airflow with making the airflow lower when starting heating operation. To correspond to the ventilation, set to “01”.
		01	Follow the setting on the remote controller		
External control	46	00	Start/Stop	♦	Allows an external controller to start or stop the system, or to perform an emergency stop, or to perform a forced stop. • If an emergency stop is performed from an external controller, same refrigerant system will be disabled. • If forced stop is set, indoor unit stops by the input to the external input terminals, and Start/Stop by a remote controller is restricted.
		01	Emergency stop		
		02	Forced stop		
Error report target	47	00	All	♦	Changes the target for reporting errors. Errors can either be reported in all locations, or only on the wired remote.
		01	Display only on central remote control		

FUNCTION SETTINGS

Function	Function number	Setting number		Factory setting	Details
Fan setting when cooling thermostat OFF	49	00	Follow the setting on the remote controller	♦	• When set “00”, indoor unit is continued operation based upon central remote controller or individual controller set. Once indoor unit received signal from external controller, indoor unit changed fan mode forcibly. • When set “01”, indoor unit is continued operation based upon central remote controller or individual controller set. Once indoor unit received signal from external controller, indoor unit stop forcibly. • Connection of the wired remote controller (2-wire type or 3-wire type) and switching its thermistor are necessary.
		01	Stop		
Switching functions for external inputs	60	00	Forced thermostat off	♦	Setting is required when connecting a refrigerant-leak detection device. For details, refer to "8. EXTERNAL INPUT AND OUTPUT".
		01	forbidden		
		02			
		03			
		04			
		05			
		06			
		07			
		08			
		09	Refrigerant leak detection		
Auto mode type	68	00	Single setpoint auto mode (traditional)	♦	Switches the setting method of auto mode to single or dual (cooling/heating). For heat pump systems, it is necessary to set the master indoor unit by using wired remote controller. **NOTE:** Auto mode type will be usable provided that the corresponding operating device is connected.
		01	Dual setpoint auto mode		
Deadband value	69	00	0 °C	♦	Choose the minimum temperature between cooling and heating settings (deadband) for dual setpoint auto mode (function number 68). **NOTE:** Deadband value will be usable provided that the corresponding operating device is connected.
		01	0.5 °C		
		02	1.0 °C		
		03	1.5 °C		
		04	2.0 °C		
		05	2.5 °C		
		06	3.0 °C		
		07	3.5 °C		
		08	4.0 °C		
		09	4.5 °C		

FUNCTION SETTINGS

Range of static pressure mode by model

Model name	Range of static pressure mode	Normal static pressure
ARXK004GLGH	SP mode 00 to 03	10 Pa
ARXK007GLGH		
ARXK009GLGH		
ARXK012GLGH		
ARXK014GLGH	SP mode 00 to 05	15 Pa
ARXK018GLGH		
ARXK024GLGH		
ARXD007GLEH	SP mode 00 to 09	25 Pa
ARXD009GLEH		
ARXD012GLEH		
ARXD014GLEH		
ARXD018GLEH		
ARXD024GLEH	SP mode 00 to 05	
ARXP018GLFH	SP mode 00 to 08	40 Pa
ARXP030GLFH	SP mode 00 to 05	50 Pa
ARXA024GLEH	SP mode 00 to 14	40 Pa
ARXA030GLEH		50 Pa
ARXA036GLEH	SP mode 00 to 12	
ARXA045GLEH	SP mode 00 to 11	60 Pa
ARXC036GTEH	SP mode 02 to 16	100 Pa

FUNCTION SETTINGS

2-11. Wired remote controller (UTY-RNK∗)

DIP switch 1	SW1	Prohibited
	SW2	Dual remote controller setting
	SW3	Prohibited
	SW4	Prohibited
	SW5	Prohibited
	SW6	Memory backup setting (Only for wired remote controller)
DIP switch 2	Do not use. (All switches fixed at OFF.)	

■ Switch location

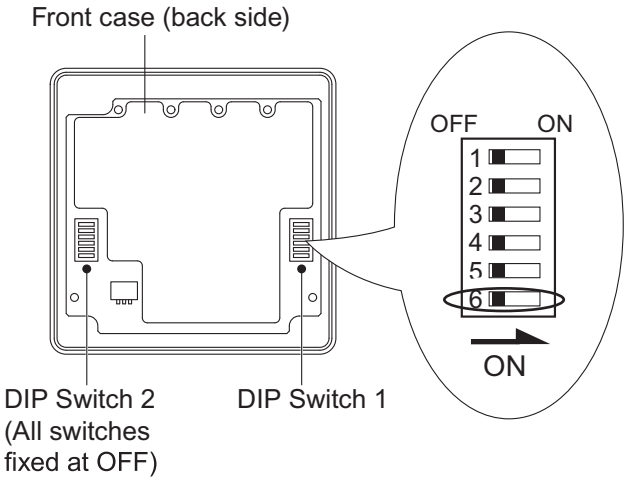

■ DIP switch 1 setting

- **SW1: Setting prohibited**

SW1		Factory setting
OFF	Fixed at OFF	♦
ON	Setting prohibited	

- **SW2: Dual remote controller setting**
  Set the remote controller SW2 according to the following table.

Number of remote controller	Primary unit	Secondary unit	Factory setting
	SW2	SW2	
1 (Normal)	OFF	—	♦
2 (Dual)	OFF	ON	

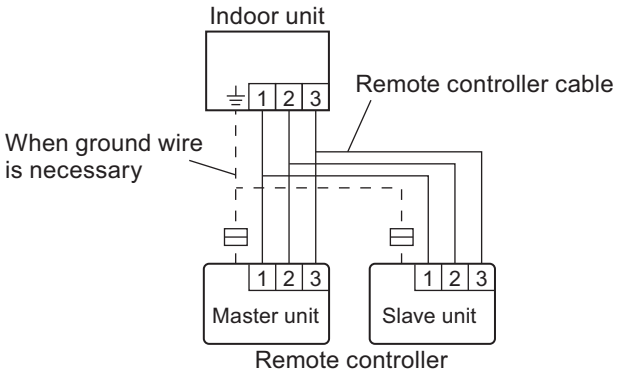

FUNCTION SETTINGS

- **SW3: Setting prohibited**

SW3		Factory setting
OFF	Fixed at OFF	♦
ON	Setting prohibited	

- **SW4: Setting prohibited**

SW4		Factory setting
OFF	Fixed at OFF	♦
ON	Setting prohibited	

- **SW5: Setting prohibited**

SW5		Factory setting
OFF	Fixed at OFF	♦
ON	Setting prohibited	

- **SW6: Memory backup setting** (Only for wired remote controller)
  Set to “ON” to use batteries for the memory backup.
  If there is a power failure when this setting is enabled, all the settings stored in the memory will be saved.

SW6	Memory backup	Factory setting
OFF	Disable	♦
ON	Enable	

NOTE: Never turn it “ON” in the case of simple remote controller.

FUNCTION SETTINGS

2-12. Simple remote controller (UTY-RSK∗, UTY-RHK∗)

DIP switch 1	SW1	Prohibited
	SW2	Dual remote controller setting
	SW3	Prohibited
	SW4	Prohibited
	SW5	Prohibited
	SW6	Memory backup setting (Only for wired remote controller)
DIP switch 2	Do not use. (All switches fixed at OFF.)	

■ Switch location

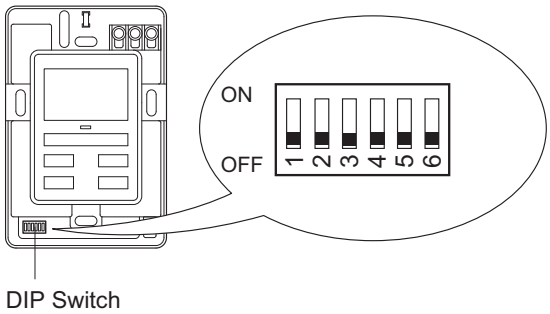

* Number of buttons differs by model.

■ DIP switch 1 setting

- **SW1: Setting prohibited**

SW1		Factory setting
OFF	Fixed at OFF	♦
ON	Setting prohibited	

- **SW2: Dual remote controller setting**
  Set the remote controller SW2 according to the following table.

Number of remote controller	Primary unit	Secondary unit	Factory setting
	SW2	SW2	
1 (Normal)	OFF	—	♦
2 (Dual)	OFF	ON	

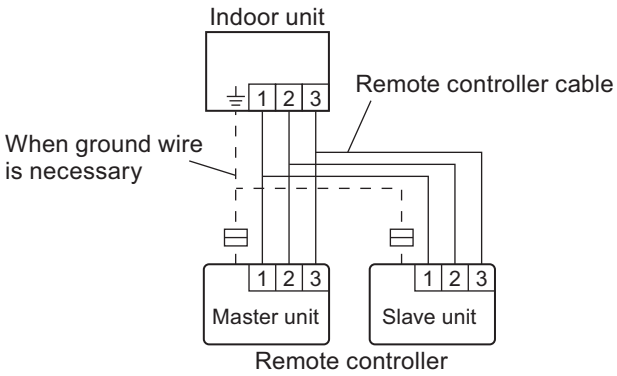

- **SW3: Setting prohibited**

SW3		Factory setting
OFF	Fixed at OFF	♦
ON	Setting prohibited	

FUNCTION SETTINGS

- **SW4: Setting prohibited**

SW4		Factory setting
OFF	Fixed at OFF	♦
ON	Setting prohibited	

- **SW5: Setting prohibited**

SW5		Factory setting
OFF	Fixed at OFF	♦
ON	Setting prohibited	

- **SW6: Memory backup setting** (Only for wired remote controller)
  Set to “ON” to use batteries for the memory backup.
  If there is a power failure when this setting is enabled, all the settings stored in the memory will be saved.

SW6	Memory backup	Factory setting
OFF	Disable	♦
ON	Enable	

NOTE: Never turn it “ON” in the case of simple remote controller.

FUNCTION SETTINGS

2-13. Group remote controller

DIP switch	SW1	Memory backup setting
	SW2	Prohibited

■ Switch location

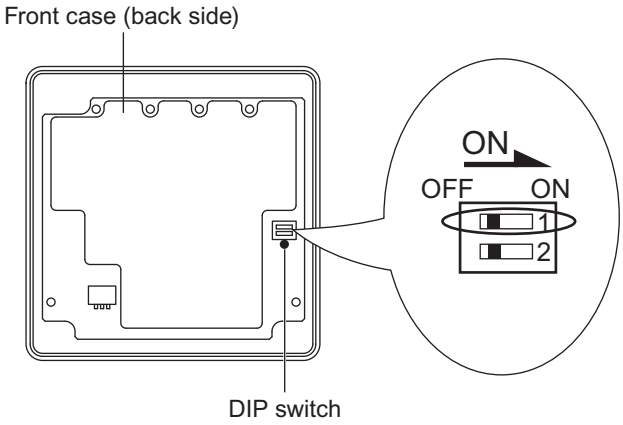

■ DIP switch 1 setting

- **SW1: Memory backup setting**
  If there is a power failure when this setting is enabled, all the settings stored in the memory will be saved.

SW1	Memory backup	Factory setting
OFF	Disable	♦
ON	Enable	

- **SW2: Setting prohibited**

SW2		Factory setting
OFF	Fixed at OFF	♦
ON	Setting prohibited	

FUNCTION SETTINGS

■ Group remote controller address setting

1. To start the setting, hold down the set time buttons ≪ and ≫ simultaneously for 2 seconds or more.

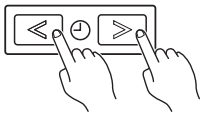

2. Press the set time buttons to set the group remote controller address.

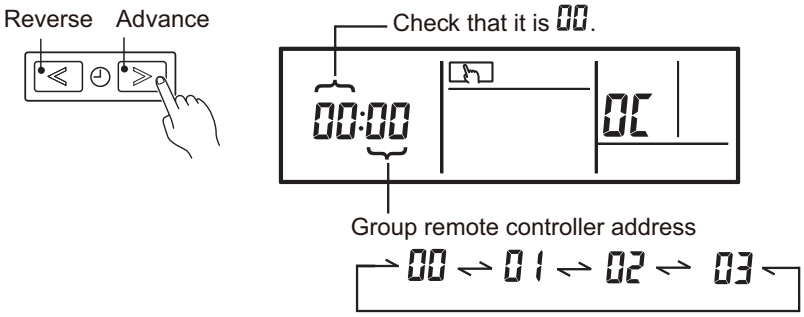

3. Press the ENTER button. Check the [((•))] and 0C flash for 2 seconds.

4. To complete the setting, hold down the set time buttons ≪ and ≫ simultaneously for 2 seconds or more again.

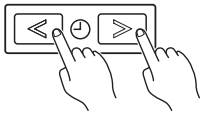

FUNCTION SETTINGS

2-14. Touch panel controller

■ Address setting

1. Display the Installer Setting screen, and press “Change” button of “1. The Controller Address Number Setting”.

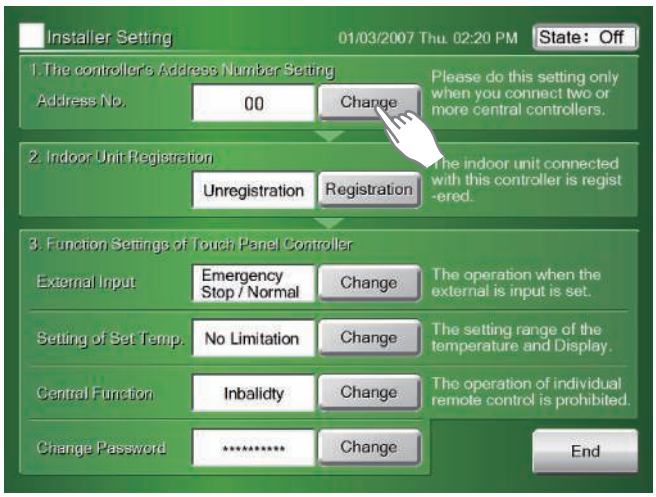

2. If it changes to “1. The controller Address Number Setting” screen, press “01” button of Address No., and then press “OK” button.

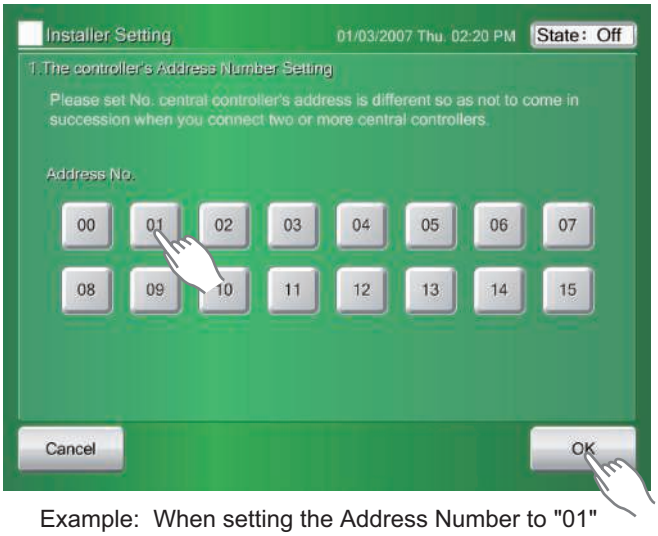

Example: When setting the Address Number to "01"

3. When it returns to Installer Setting screen, make sure that Address No. is “01”, and then complete the setting.

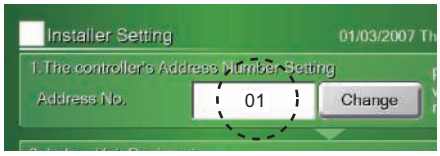

NOTES:

- Address No. can be set between “00” and “15”. (Up to 16 of this controller can be installed in 1 system.)
- When installing 2 or more controllers, set up so that Address No. does not overlap.
- When installing multiple controllers in the same VRF network system, avoid to overlap the Address No. of following controllers. (Even the same type of controllers, the Address No. is not allowed to overlap.)
  - Touch panel controller, Central remote controller
  - Modbus convertor
  - Network convertor for LONWORKS, Network convertor for Group remote controller
- For details, refer to the operating manual of the controller.

FUNCTION SETTINGS

2-15. Central remote controller (UTY-DCG∗Z∗)

■ DIP switch setting

DIP switch	Memory backup setting

● Switch location

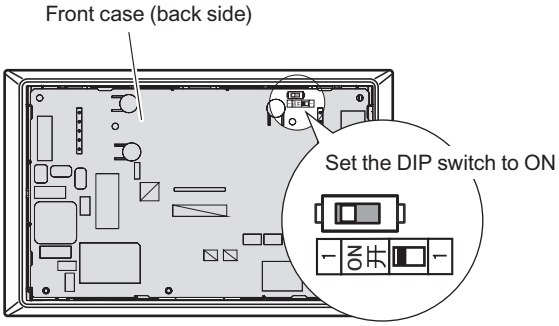

● Memory backup setting

DIP switch		Factory setting
OFF	Disabled	♦
ON	Enabled	

■ Address setting

1. Tap Menu button.

2. Tap “Installer Setting”.

3. Tap “Central controller Address Setting”.

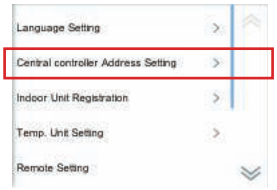

FUNCTION SETTINGS

FUNCTION SETTINGS

4. Tap the address list “00” to “15”.

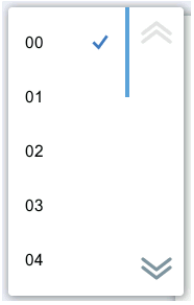

NOTES:

- Address No. can be set between “00” and “15”. (Up to 16 of this controller can be installed in 1 system.)
- When installing 2 or more controllers, set up so that Address No. does not overlap.
- When installing multiple controllers in the same VRF network system, avoid to overlap the Address No. of following controllers. (Even the same type of controllers, the Address No. is not allowed to overlap.)
  - Touch panel controller, Central remote controller
  - Modbus convertor
  - Network convertor for LONWORKS, Network convertor for Group remote controller
- For details, refer to the operating manual of the controller.

FUNCTION SETTINGS

2-16. Wired remote controller (Touch panel)

■ Remote controller address confirmation

When “R.C. Address Setting” on the Maintenance screen is touched, Installer Password Verification screen is displayed.
Enter the Installer Password, and touch “OK”. R.C. Address Setting screen is displayed.

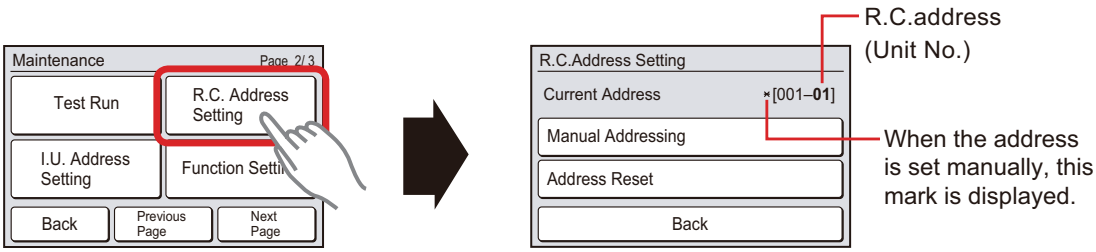

When the “Back” is touched, the display returns to the Maintenance screen.

NOTE: The address of this unit is set automatically. Do not change the indoor unit remote controller address from the factory setting “0”. (Verify that the address is “0”.)

■ Manual address setting of the remote controller

1. Touch “Manual Addressing” on the R.C. Address Setting screen.

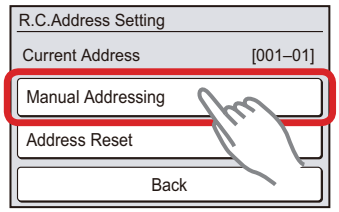

2. Manual Addressing screen is displayed. Set the address by touching “▲” or “▼”.

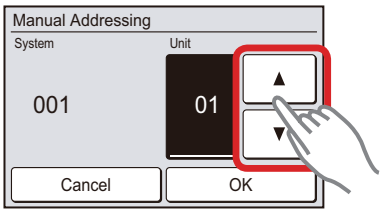

When “OK” is touched, a verification screen is displayed.

3. When the “Yes” on the verification screen is touched, a message screen is displayed.

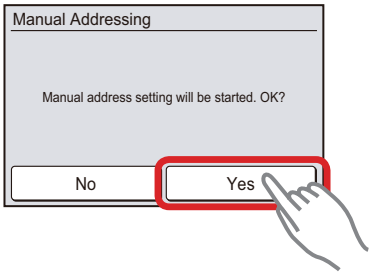

FUNCTION SETTINGS

FUNCTION SETTINGS

4. When the “Close” on the message screen is touched, the display returns to the R.C. Address Setting screen. Turn on the power again.

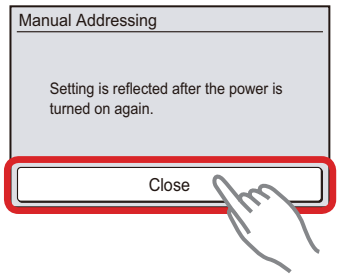

NOTES:

- Perform manual address setting only when setting the address with an arbitrary number. Indoor unit remote controller address setting is necessary. Set the remote controller address of indoor units connected by the same remote controller cable within a range of 1 to 9 and A (10) to F (15) so that there is no duplication. (Do not set to “0”.)
- The address of this unit is set within a range of 1 to 32, but set it so that it does not duplicate the remote controller address of an indoor unit connected by the same remote controller cable.

■ Resetting the manual address setting number

1. Touch “Address Reset” on the R.C. Address Setting screen.

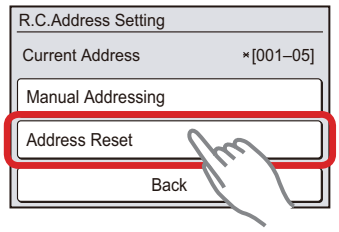

2. A verification screen is displayed. When the “Yes” is touched, a message screen is displayed.

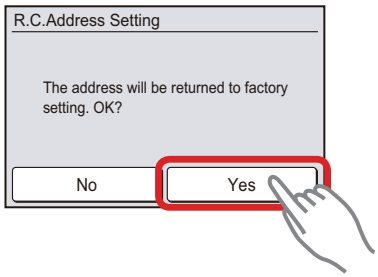

3. When the “Close” on the message screen is touched, the display returns to the R.C. Address Setting screen. Turn on the power again.

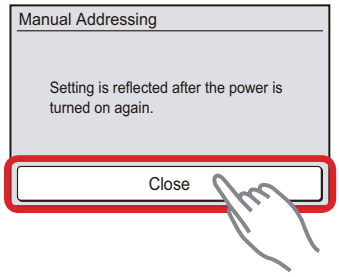

FUNCTION SETTINGS

■ Master or slave setting of remote controller

1. Touch “RC Master/Slave Setting” on the Initial Setting screen.

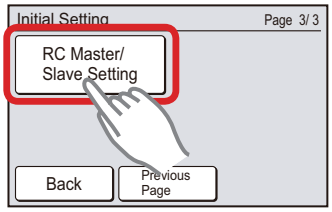

2. RC Master/Slave Setting screen is displayed. Select “Master” or “Slave”.

When the “OK” is touched, the display returns to the Initial Setting screen.

NOTE: Set only one master remote controller. Units other than “Master” are set to “Slave” automatically. Do not perform “RC Mater/Slave Setting” during setting or operating from the master unit.

■ Indoor unit address verification

1. When “I.U. Address Verification” on the Maintenance screen is touched, Installer Password Verification screen is displayed.
   Enter the Installer Password, and touch “OK”. I.U. Address Verification screen is displayed.

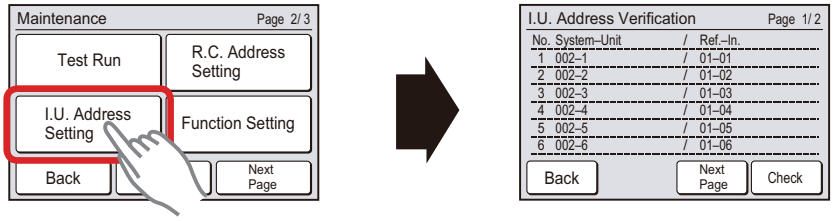

2. When the screen has multiple pages, they can be switched by touching the “Next Page” or “Previous Page”.

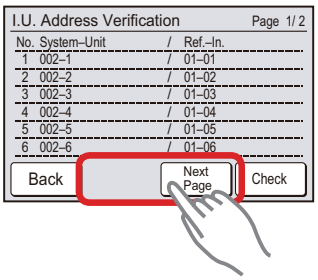

3. Touch the “Check” on the I.U. Address Verification screen.

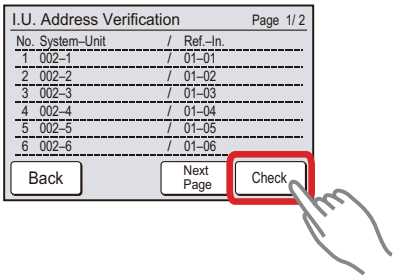

FUNCTION SETTINGS

4. When the “Yes” on the verification screen of indoor unit verification is touched, all indoor units will stop, and the verification mode starts.

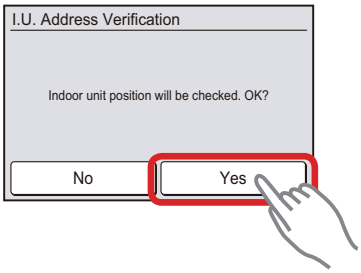

5. When indoor unit position verification ends, a screen displaying the indoor units in a list is displayed. When the screen has multiple pages, they can be switched by touching the “Next Page” or “Previous Page”.

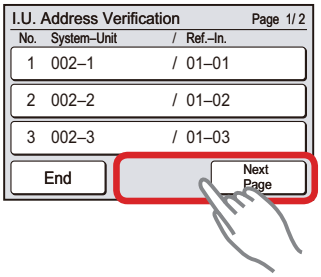

When the indoor unit address to be verified is touched, the appropriate indoor unit performs the air blow and the LED lamps blink*. (*Only when the indoor unit has that function.)

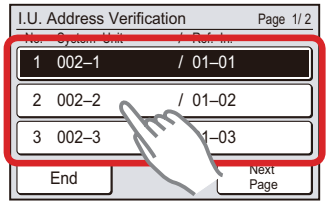

6. When the “End” is touched, the display returns to the I.U. Address Verification screen mentioned in step 2.

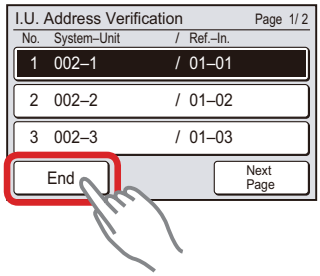

When “Back” on the I.U. Address Verification screen is touched, the display returns to the Maintenance screen.

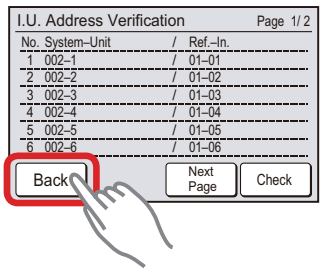

FUNCTION SETTINGS

2-17. Wired remote controller (UTY-RLR∗)

■ Remote controller address confirmation

1. Select “15” in Menu 2 settings. Then press the ENTER button.

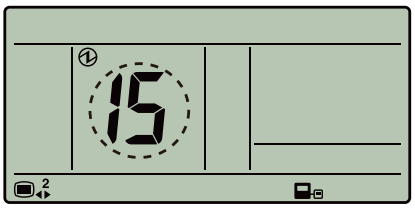

2. The address of this unit is displayed on the screen.

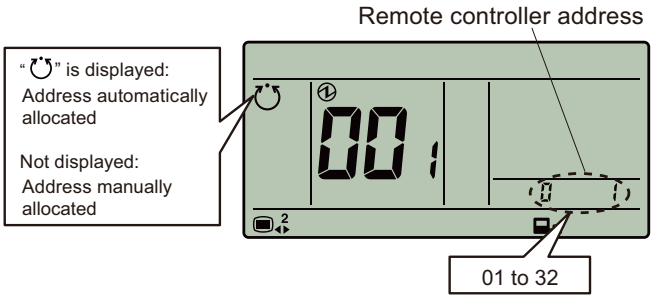

Press the ENTER button to return to the Menu 2 item selection screen.

NOTE: The address of this unit is set automatically. Do not change the indoor unit remote controller address from the factory setting “0”. (Verify that the address is “0”.)

■ Master or slave setting of remote controller

1. Select the “06” in Menu 2 Settings. Then press the ENTER button.

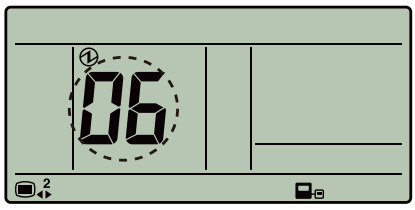

2. Select the “0: Master” or the “1: Slave” with the + or - buttons.

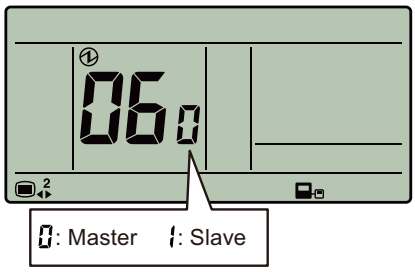

FUNCTION SETTINGS

3. Press the ENTER button. If there is no problem, return to Menu 2 items selection screen. In the case of settings at initial booting, display Monitor mode screen.
   If there is 0 or more than 2 Master units, the number will be displayed.
   - If “Master” is 0, press the ENTER button to return to the Menu 2 item selection screen.
   - If “Master” is more than 2, press the ENTER button to return to the screen in previous step.
   - If “Master” is 0 or more than 2, press the MENU button to return to the Menu 2 item selection screen.

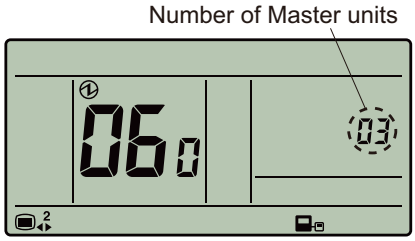

NOTE: Set only one master remote controller.

■ Indoor unit address verification

1. Select the “10” in Menu 2 Settings. Then press the ENTER button.

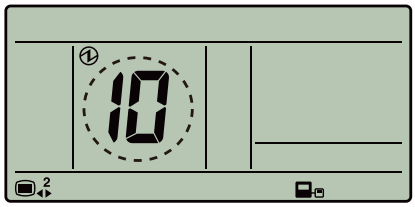

2. From remote controller with smallest 2-wire remote controller address of the remote controller group will be displayed.
   Indoor units displayed can be switched by + or - button.

   (a) Refrigerant circuit address (00 to 99)
   (b) Indoor unit address (00 to 63)
   (c) System number (002: Indoor unit)
   (d) Remote controller address (01 to 32)

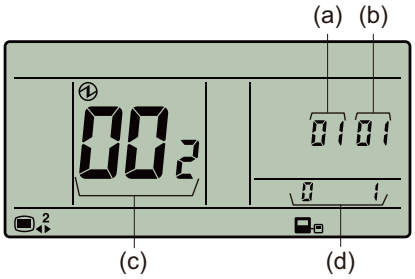

3. Press the MENU button to return to the Menu 2 item selection screen.

FUNCTION SETTINGS

FUNCTION SETTINGS

2-18. Simple remote controller (UTY-RSR∗, UTY-RHR∗)

■ Remote controller address confirmation

1. Select the “15” in Menu 2-F1 Settings. Then press the “⏻/I” button.

2. You can check current allocation of 2-wire remote controller address (system number and unit number).

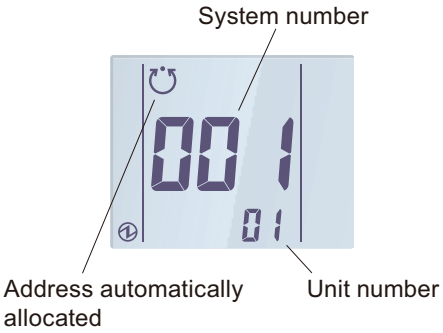

Press the “⏻/I” button to return to the Menu 2-F1 item selection screen.

NOTE: In the case of automatic address settings, do not change the remote controller address for the indoor unit, and keep it at the initial setting of “0”. Addresses will be automatically set when initially starting up this unit.

■ Master or slave setting of remote controller

1. Select the “06” in Menu 2-F1 Settings. Then press the “⏻/I” button.

2. Select the “0: Master” or the “1: Slave” with the TEMP. “∧” or TEMP. “∨” button.

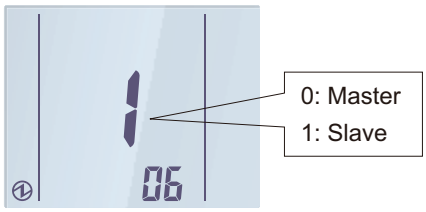

FUNCTION SETTINGS

3. Press the "⏻/I" button. If there is no problem, return to Menu 2-F1 items selection screen. In the case of settings at initial booting, display Monitor mode screen.
   If there is 0 or more than 2 Master units, the number will be displayed.
   - If "Master" is 0, press the "⏻/I" button to return to the Menu 2-F1 item selection screen.
   - If "Master" is more than 2, press the "⏻/I" button to return to the screen in previous step.
   - To suspend the settings part way through and return to the Menu 2-F1 item screen, press FAN "∨" button.

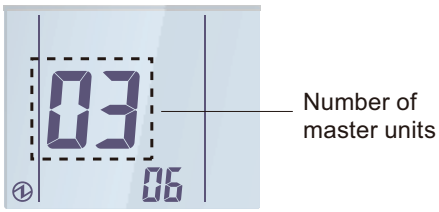

NOTE: Set only one master remote controller.

■ Indoor unit address verification

1. Select the "10" in Menu 2-F2 Settings. Then press the "⏻/I" button.

2. Display the smallest 2-wire remote controller address of indoor unit (system number and unit number) of the remote controller group. This address displayed can be switched by the TEMP. "∧" or TEMP. "∨" button. If an indoor unit other than VRF is connected, "-" is displayed.
   Press the "⏻/I" button to display the refrigerant system address and indoor unit address.

   (a) System number (002: Indoor unit)
   (b) Unit number (01 to 32)
   (c) Refrigerant system address (00 to 99)
   (d) Indoor unit address (00 to 63)

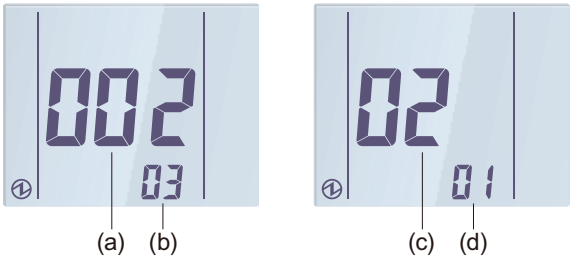

3. Press the FAN "∨" button to return to the Menu 2-F2 item selection screen.

FUNCTION SETTINGS

FUNCTION SETTINGS

2-19. Network convertor (UTY-VTGX, UTY-VTGXV)

■ Switch location

Set the rotary switches (SET1) and DIP switches (SET2, SET3) on the network convertor PCB.

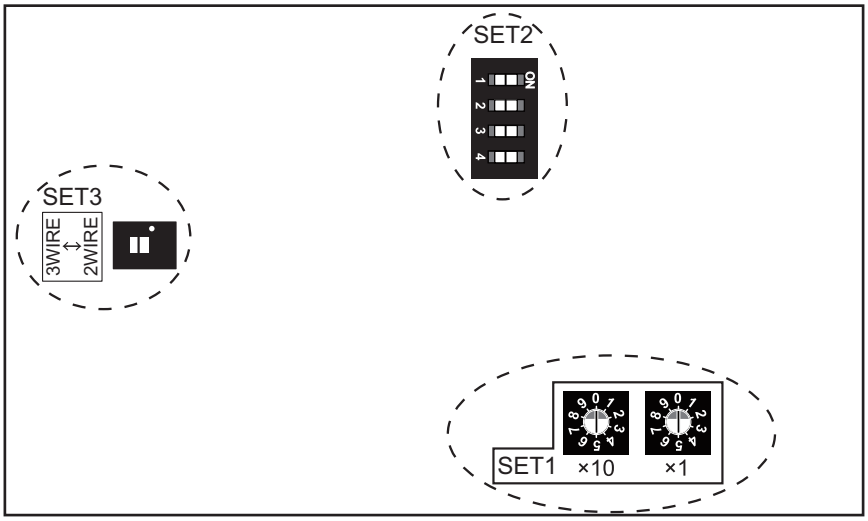

■ Rotary switch setting

- **SET1: Refrigerant circuit address setting**

Refrigerant circuit address (Example)	Rotary switch setting	
	SET1 (x10) (10 digit)	SET1 (x1) (1 digit)
01	0	1
99	9	9

NOTES:

- Setting range: 00 to 99 (Arbitrary numbers can be set.)
- When connecting the Network converter for single split air conditioner, set up the number so that the refrigerant circuit address number of the outdoor unit and indoor unit does not overlap. The sum total of the refrigerant circuit address of Network converter for single split air conditioner, outdoor unit and the indoor unit is a maximum of 100.

FUNCTION SETTINGS

■ DIP switch setting

- **SET2-1: Terminal resistance setting**
  When there is no other terminal resistance in the network segment to which the convertor is connected, set to “ON”.

SET2-1	Terminal resistance	Factory setting
ON	Enable	
OFF	Disable	♦

- **SET2-2: Setting prohibited**

SW1		Factory setting
OFF	Fixed at OFF	♦
ON	Setting prohibited	

- **SET2-3: Setting prohibited**

SW1		Factory setting
OFF	Fixed at OFF	♦
ON	Setting prohibited	

- **SET2-4: Used remote controller setting**
  Change the DIP switch setting depending on the remote controller model name attached to the indoor unit.

  NOTE: When 2-wire type remote controller is connected, set to “OFF” for all models.

SET2-4		Factory setting
ON	Wireless remote controller model name: AR-RAK1E 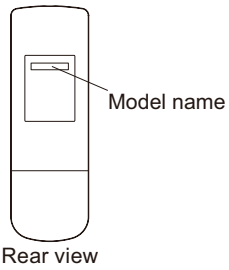 	
	3-wire type wired remote controller model name: AR-WAG1E (UTY-RNNGU) 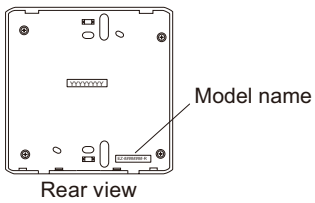 	
OFF	Other than the remote controller mentioned above	♦

- **SET3: Remote controller 2-wire/3-wire switching**
  Set this setting so that the configuration match with the setting of the used indoor unit.
  Also, set matched with the connection method of the remote controller cable to be connected.

SET3	RC 2-wire/3-wire	Factory setting
2WIRE	2-wire type	♦
3WIRE	3-wire type	

FUNCTION SETTINGS

2-20. Network convertor (UTY-VGGXZ1)

■ Switch location

Set the rotary switches (SW110, SW111) on the network convertor PCB.

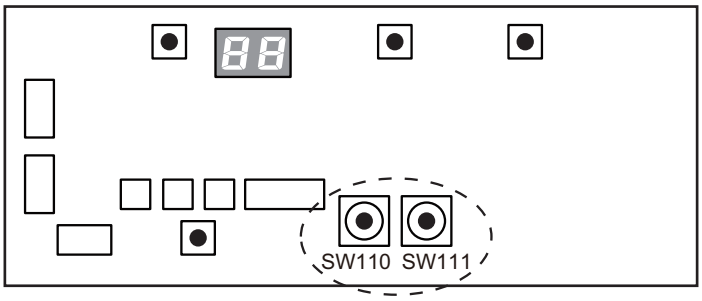

■ Rotary switch setting

- **Convertor address setting for Group remote controller**

Convertor address (Example)	Rotary switch setting	
	SW110 (10 digit)	SW111 (1 digit)
01	0	1
15	1	5

NOTES:

- Setting range: 00 to 15 (Arbitrary numbers can be set.)
- The sum total of the Touch panel controller, Central remote controller, Network converter for Group remote controller, Modbus converter, and Network converter for LonWorks is a maximum of 16.
- For Touch panel controller, Central remote controller, Network converter for Group remote controller, Modbus converter, and Network converter for LonWorks connected in same VRF network system, set an exclusive address on each device.

FUNCTION SETTINGS

- **Refrigerant circuit address setting for split system**

Refrigerant circuit address (Example)	Rotary switch setting	
	SW110 (10 digit)	SW111 (1 digit)
01	0	1
99	9	9

NOTES:

- Setting range: 00 to 99 (Arbitrary numbers can be set.)
- When connecting the Network converter for single split air conditioner, set up the number so that the refrigerant circuit address number of the outdoor unit and indoor unit does not overlap. The sum total of the refrigerant circuit address of Network converter for single split air conditioner, outdoor unit and the indoor unit is a maximum of 100.

FUNCTION SETTINGS

2-21. Signal amplifier

■ Switch location

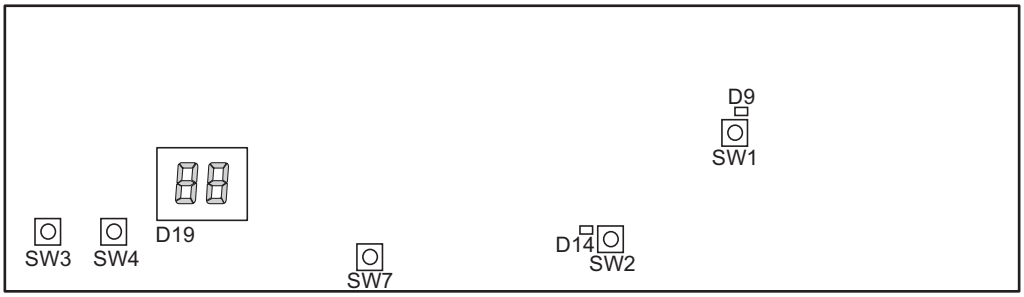

■ Automatic address setting

Refer to "Automatic address setting of signal amplifier" on page 07-57.

■ Manual address setting

1. Turn on the power for the signal amplifier.

2. While holding down SW4 (the set button), press and release SW7 (the reset button) to enter the address setting mode.
   The address setting mode is activated only if the set button is held down when SW7 released.

3. Press SW4 (the set button) to display the current address. The address is set to A1 at the factory.

Example 1: When A1 is set

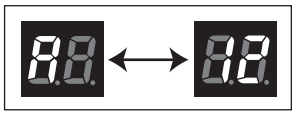

Example 2: When A12 is set

FUNCTION SETTINGS

4. Press SW3 (the mode button) to select the address. The displayed address changes as follows each SW3 button is pressed. When the manual setting is selected, the indicators change as follows:

Filter mode: OFF

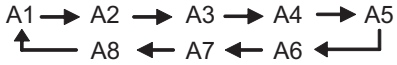

Filter mode: ON

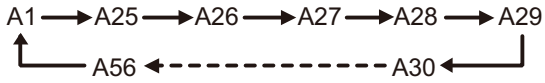

Example: Address No.5 is selected

- Press the SW3 when A9-A16 or A57-A88 is displayed, then A1 will be displayed.
- If connecting multiple signal amplifiers, be sure to select a different address for each amplifier.
- If the same address is used for different signal amplifiers, normal communication cannot be done.

5. Press SW4 (the set button) to set the selected address.

Example: Address no.5 is set

6. Turn the power off and on or press SW7 (the reset button) to exit the address setting mode and return to the normal mode. If an address setting error occurs (“26” is displayed on the D19-indicator), the address will not be set. Perform address setting again.

Normal mode

Address setting error

FUNCTION SETTINGS

2-22. KNX convertor for VRF

■ Switch location

Set the rotary switch (SET1), DIP switch (SET2), and Programming (Prog) button on the KNX convertor PCB.

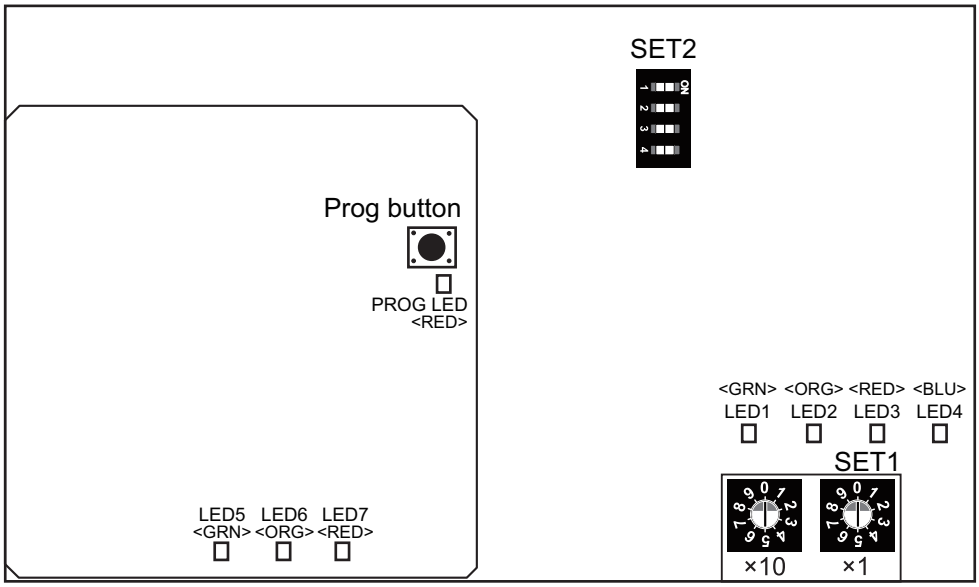

■ Rotary switch setting

- **SET1: KNX convertor remote controller address setting**

Refrigerant circuit address (Example)	Rotary switch setting	
	SET1 (x10) (10 digit)	SET1 (x1) (1 digit)
01	0	1
15	1	5

NOTES:

- Factory setting: 00
- Setting range: 00 to 15 (Arbitrary numbers can be set.)
- When the rotary switch is set to 16 or more, the remote controller address of the convertor is 15.
- The sum total of the Touch panel controller, Central remote controller, Network converter for Group remote controller, Modbus converter, and Network converter for LonWorks is a maximum of 16.
- For Touch panel controller, Central remote controller, Network converter for Group remote controller, Modbus converter, and Network converter for LonWorks connected in same VRF network system, set an exclusive address on each device.
- This convertor is connectable a maximum of 9 in 1 VRF network system.

FUNCTION SETTINGS

■ DIP switch setting

- **SET2-1: VRF terminal resistance setting**
  When there is no outdoor unit or signal amplifier in the VRF network segment to which the convertor is connected, set to “ON”.

SET2-1	VRF terminal resistance	Factory setting
ON	Enable	
OFF	Disable	♦

- **SET2-2: Setting prohibited**

SET2-2		Factory setting
OFF	Fixed at OFF	♦
ON	Setting prohibited	

- **SET2-3: Test run setting**

SET2-3	Test run	Factory setting
OFF	Reset	♦
ON	Start	

- **SET2-4: Scan setting**

SET2-4	Scan	Factory setting
OFF	Reset	♦
ON	Start	

■ Programming (Prog) button setting

- **Prog button: Mode setting when communicating with the ETS**
  Push to switch between Runtime mode and Programming mode.

PROG LED	Mode setting	Factory setting
ON	Programming mode	
OFF	Runtime mode	♦

■ Configuration and setting up

This is a fully compatible KNX device which must be configured and setup using standard KNX tool ETS.

For how to configure the settings from the ETS, refer to the Interface Specification.

ETS database for this device can be downloaded from:

https://fujitsu-general.com/global/support/downloads/vrf/index.html

FUNCTION SETTINGS

2-23. KNX convertor for Indoor unit

■ Switch location

Set Programming (Prog) button on the KNX convertor PCB.

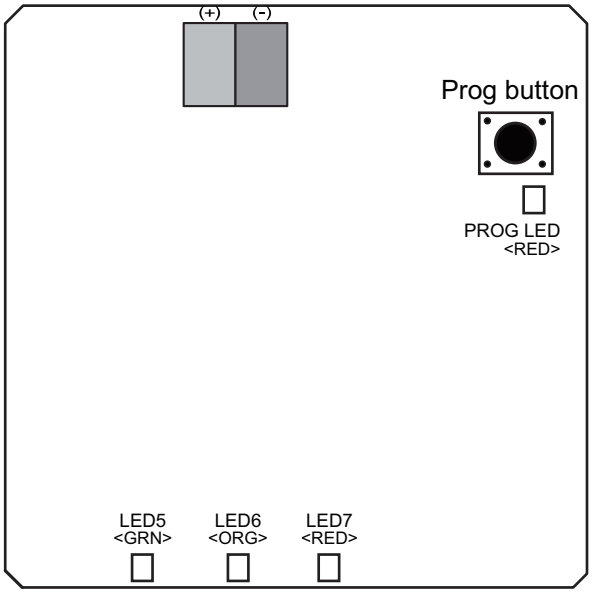

■ Programming (Prog) button setting

- **Prog button: Mode setting when communicating with the ETS**
  Push to switch between Runtime mode and Programming mode.

PROG LED	Mode setting	Factory setting
ON	Programming mode	
OFF	Runtime mode	♦

■ Configuration and setting up

This is a fully compatible KNX device which must be configured and setup using standard KNX tool ETS.

For how to configure the settings from the ETS, refer to the Interface Specification.

ETS database for this device can be downloaded from:

https://fujitsu-general.com/global/support/downloads/vrf/index.html

FUNCTION SETTINGS

2-24. Modbus converter for VRF

■ Switch location

Set the rotary switch (SET1) and DIP switches (SET2, 4, 5, 6, 7) on the PCB.

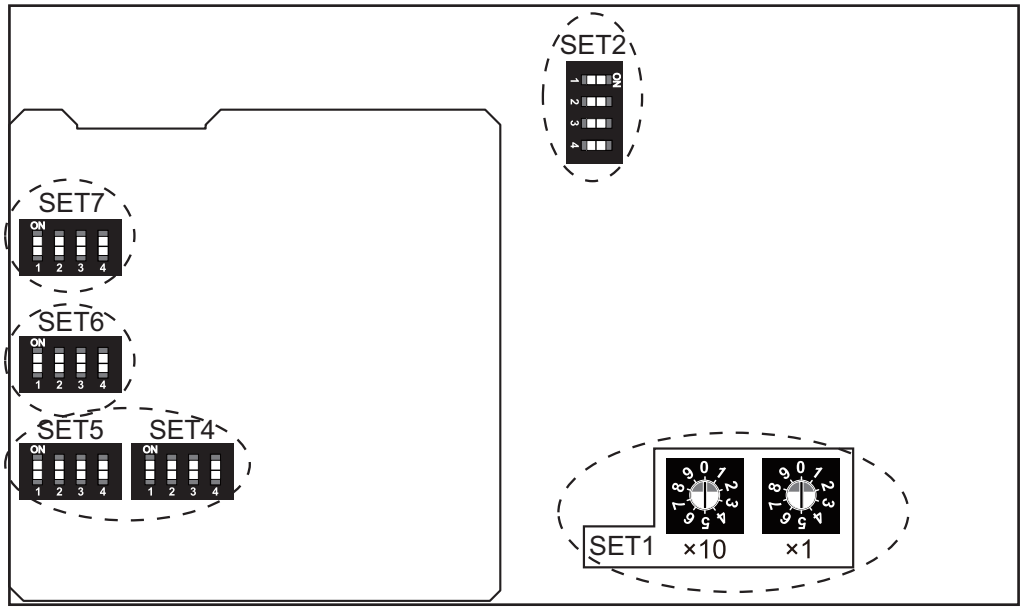

■ Rotary switch setting

- **SET1: Modbus converter remote controller address setting**

Refrigerant circuit address (Example)	Rotary switch setting	
	SET1 (x10) (10 digit)	SET1 (x1) (1 digit)
01	0	1
15	1	5

NOTES:

- Factory setting: 00
- Setting range: 00 to 15 (Arbitrary numbers can be set.)
- When the rotary switch is set to 16 or more, the remote controller address of the convertor is 15.
- The sum total of the Touch panel controller, Central remote controller, Network converter for Group remote controller, Modbus converter, and Network converter for LonWorks is a maximum of 16.
- For Touch panel controller, Central remote controller, Network converter for Group remote controller, Modbus converter, and Network converter for LonWorks connected in same VRF network system, set an exclusive address on each device.
- This convertor is connectable a maximum of 9 in 1 VRF network system.

FUNCTION SETTINGS

■ DIP switch setting

- **SET2-1: VRF terminal resistance setting**
  When there is no outdoor unit or signal amplifier in the VRF network segment to which the convertor is connected, set to “ON”.

SET2-1	VRF terminal resistance	Factory setting
ON	Enable	
OFF	Disable	♦

- **SET2-2: Setting prohibited**

SET2-2		Factory setting
OFF	Fixed at OFF	♦
ON	Setting prohibited	

- **SET2-3: Test run setting**

SET2-3	Test run	Factory setting
OFF	Reset	♦
ON	Start	

- **SET2-4: Scan setting**

SET2-4	Scan	Factory setting
OFF	Reset	♦
ON	Start	

- **SET4, SET5: Modbus slave address setting**
  Setting range: 1-247 (Arbitrary numbers can be set.)
  For details, refer to the installation manual.

- **SET6-1: Setting prohibited**

SET6-1		Factory setting
OFF	Fixed at OFF	♦
ON	Setting prohibited	

- **SET6-2: Modbus communication stop bit setting**

SET6-2	Modbus communication stop bit	Factory setting
OFF	1 bit	♦
ON	2 bit	

- **SET6-3: Modbus communication parity setting**

SET6-3	Modbus communication parity	Factory setting
OFF	Even	♦
ON	Odd	

NOTE: When SET6-2 (Modbus communication stop bit setting) is set to “ON” (2 bit), the parity is set to “None” regardless of the setting of this switch.

FUNCTION SETTINGS

- **SET6-4: Modbus communication baud rate setting**

SET6-4	Modbus communication baud rate	Factory setting
OFF	9,600 bps	♦
ON	19,200 bps	

- **SET7-1, 7-2, 7-3: Setting prohibited**

SET7-1, 2, 3		Factory setting
OFF	Fixed at OFF	♦
ON	Setting prohibited	

- **SET7-4: Terminal resistance setting**
  Terminal resistance of Modbus communication can be set. (Terminal resistance: 120 Ω)
  In case of circuit terminal resistance, set the terminal resistance to be enabled.

SET7-4	Terminal resistance	Factory setting
OFF	Disable	♦
ON	Enable	

FUNCTION SETTINGS

2-25. Modbus converter for indoor unit

■ Switch location

Set the DIP switches (SET4, 5, 6, 7) on the PCB.

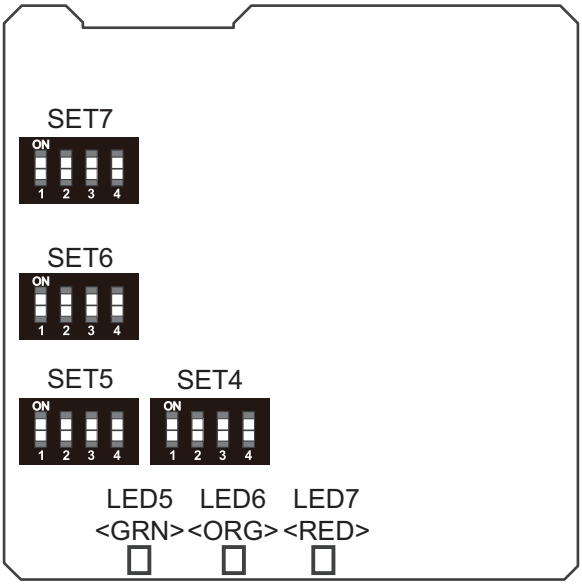

■ DIP switch setting

- **SET4, SET5: Modbus slave address setting**
  Setting range: 1-247 (Arbitrary numbers can be set.)
  For details, refer to the installation manual.

- **SET6-1: Setting prohibited**

SET6-1		Factory setting
OFF	Fixed at OFF	♦
ON	Setting prohibited	

- **SET6-2: Modbus communication stop bit setting**

SET6-2	Modbus communication stop bit	Factory setting
OFF	1 bit	♦
ON	2 bit	

- **SET6-3: Modbus communication parity setting**

SET6-3	Modbus communication parity	Factory setting
OFF	Even	♦
ON	Odd	

NOTE: When SET6-2 (Modbus communication stop bit setting) is set to “ON” (2 bit), the parity is set to “None” regardless of the setting of this switch.

- **SET6-4: Modbus communication baud rate setting**

SET6-4	Modbus communication baud rate	Factory setting
OFF	9,600 bps	♦
ON	19,200 bps	

FUNCTION SETTINGS

- **SET7-1, 7-2, 7-3: Setting prohibited**

SET7-1, 2, 3		Factory setting
OFF	Fixed at OFF	♦
ON	Setting prohibited	

- **SET7-4: Terminal resistance setting**
  Terminal resistance of Modbus communication can be set. (Terminal resistance: 120 Ω)
  In case of circuit terminal resistance, set the terminal resistance to be enabled.

SET7-4	Terminal resistance	Factory setting
OFF	Disable	♦
ON	Enable	

FUNCTION SETTINGS

2-26. Network converter for LonWorks

■ Switch location

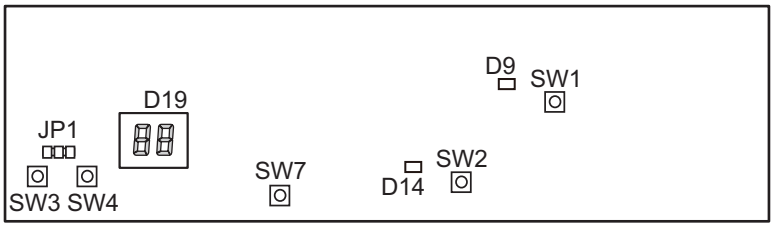

■ Address setting

Following steps are necessary for setting address of Network converter.

For Touch panel controller, Central remote controller, Network converter for Group remote controller, Modbus converter, and Network converter for LonWorks connected in same VRF network system, set an exclusive address on each device.

1. Turn on the power of the Network converter.

2. Select the special mode by pressing and releasing SW7 (reset button) while holding down SW4 (set button) until special mode “1” is displayed.
   Special mode changes from “1” to “4” as shown in the following figure.

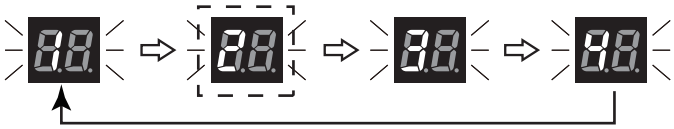

3. Press SW3 (mode button) to set special mode “2”. Special mode “2” is the address setting mode.

4. Press SW4 (set button). Current set address is displayed.

Example: Address no. 15 (Factory setting)

5. Press SW3 (mode button) to select the address. The displayed address changes as follows each time the mode button is pressed.

A00 → A01 → A02 - - - - - - - - → A15

Example: Address no. 3 is selected.

6. Press SW4 (set button) to set the selected address.

Example: Address no. 3 is set

7. Turn the power off and on or press SW7 (reset button) to exit from address setting mode. Anyone of the following indication will disappear:

: VRF Network address allocation is not registered by using Tool for Network converter

: Binding and commissioning is not executed

: Normal mode (Ready for operation)

Others : Refer to the installation manual for more details.

FUNCTION SETTINGS

2-27. Duct static pressure setting

■ Low static pressure duct (Mini duct) type, Low static pressure duct (Slim duct)/Slim concealed floor type, Low static pressure duct (High efficiency) type, Medium static pressure duct type, and 72/90/96GTEH in High static pressure duct type

When the external static pressure is different from the normal static pressure, change the airflow setting.

Setting of airflow can be changed by wireless remote controller, wired remote controller, and simple remote controller.

How to set airflow (external static pressure):

- **Wireless remote controller**
  Airflow is set by function number 26 (static pressure).
  For details, refer to the following sections:
  – "Button name and function" on page 07-17
  – "Indoor unit (setting by wireless remote controller)" on page 07-87
  – "Function details" on page 07-108

- **Wired remote controller (UTY-RNK∗)**
  Airflow is set by function number 26 (static pressure).
  For details, refer to the following sections:
  – "Button name and function" on page 07-28
  – "Indoor unit (setting by UTY-RNK∗)" on page 07-93
  – "Function details" on page 07-108

- **Wired remote controller (UTY-RLR∗)**
  Airflow is set by function number 26 (static pressure).
  For details, refer to the following sections:
  – "Indoor unit (setting by UTY-RLR∗)" on page 07-105
  – "Function details" on page 07-108

- **Simple remote controller (UTY-RSK∗, UTY-RHK∗)**
  Airflow is set by function number 26 (static pressure).
  For details, refer to the following sections:
  – "Button name and function" on page 07-40
  – "Indoor unit (setting by UTY-RSK∗, UTY-RHK∗)" on page 07-99
  – "Function details" on page 07-108

- **Simple remote controller (UTY-RSR∗, UTY-RHR∗)**
  Airflow is set by function number 26 (static pressure).
  For details, refer to the following sections:
  – "Indoor unit (setting by UTY-RSR∗, UTY-RHR∗)" on page 07-96
  – "Function details" on page 07-108

- **Wired remote controller (Touch panel)**
  Airflow is set by function number 26 (static pressure).
  For details, refer to the following sections:
  – "Indoor unit (setting by UTY-RNR∗Z∗)" on page 07-102
  – "Function details" on page 07-108

FUNCTION SETTINGS

⚠ CAUTION

- Setting of static pressure must be fall within the static pressure setting range described in "Fan performance curve" in Chapter 4. INDOOR UNITS on page 04-193.
- Static pressure setting out of the static pressure setting range may cause product malfunction such as capacity degradation or water leakage.

FUNCTION SETTINGS

2-28. Administrative indoor unit setting

An indoor unit which decides the priority mode (cooling or heating) in a same refrigerant system can be set as an administrative indoor unit.

NOTE: Administrative indoor unit can be set to only 1 unit in a same refrigerant system.

■ Setting method

Administrative indoor unit setting can be performed by outdoor unit function setting and wired remote controller setting.

1. Perform outdoor unit function setting with referring "Setting on outdoor unit PCB" on page 07-67.
2. Perform wired remote controller setting. Depend on the type of the wired remote controller, setting method is different as follows:
   - **Wired remote controller (Touch panel)**
     a. Touch the “Master Indoor Unit Setting” on the Initial Setting screen. Master Indoor Unit Setting screen is displayed. (Master indoor unit = Administrative indoor unit)

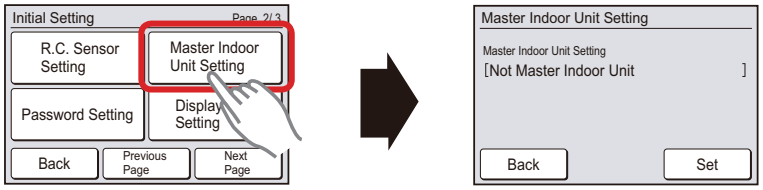

     b. When “Set” is touched on the Master Indoor Unit Setting screen, a verification screen is displayed.

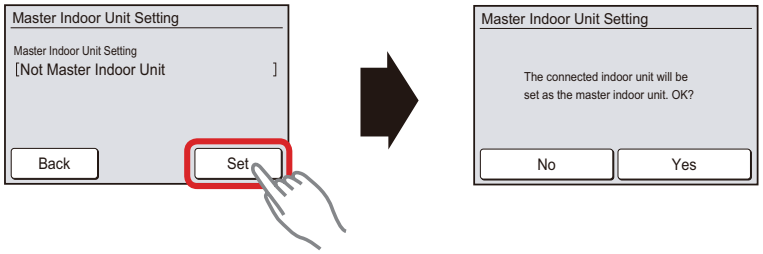

     c. When “Yes” is touched on the verification screen, the setting data is transmitted to the indoor unit and the display returns to the Master Indoor Unit Setting screen.

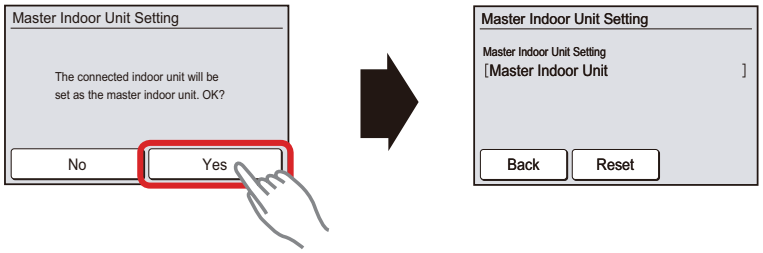

     d. When “Back” is touched on the Master Indoor Unit Setting screen, the display returns to the Initial Setting screen.

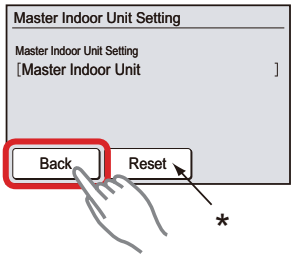

*: To clear the master indoor unit setting, touch “Reset”. (Resetting cannot be performed while the indoor unit is operating.)

FUNCTION SETTINGS

NOTE: For canceling the existing master unit setting and applying the master unit setting to other indoor unit, always perform the resetting of current setting first. Then perform the master unit setting to the other indoor unit.

- **Wired remote controller**

a. After the indoor unit stops operation, press the MODE button of wired remote controller for 5 seconds continuously.
After 5 seconds, the operating mode indicator on the wired remote controller display lights on.

When the unit is not set as the administrative indoor unit (A):

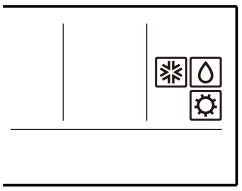

When the unit is set as the administrative indoor unit (B):

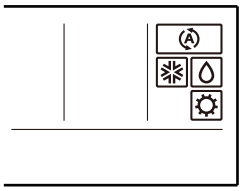

b. Press the MODE button.
   - The indicator blinks when the MODE button is pressed, and the indication of 1-(A) and 1-(B) alters whenever the MODE button is pressed.
   - The setting configured on the wired remote controller is transmitted to the indoor unit immediately after the selection of (A) or (B) is completed. It may take 10 seconds or so depending on the communication conditions. During this period, the button operation will be suspended.
   - It automatically returns to the regular display after 20 seconds if there is no button entry.
   - When the setting or canceling is completed, the indication on the wired remote controller changes to the regular indication from blinking.

NOTES:
When operation lock indicator lights on, the MODE button is locked because of the following reasons:

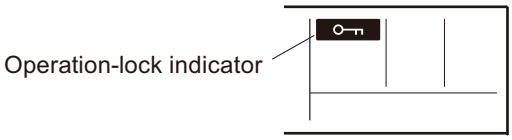

- "Priority on administrative indoor unit" is not selected in the setting of priority mode of the outdoor unit.
  In this case, select "Priority on administrative indoor unit" in setting of priority mode of the outdoor unit first. Then set the administrative indoor unit on the wired remote controller.
- Another indoor unit has already been set as the administrative indoor unit.
  In this case, cancel the administrative indoor unit setting of another indoor unit.

c. Complete the setting or canceling of the administrative indoor unit.
Press the MODE button of the wired remote controller again for 5 seconds continuously. The indication returns to the regular display.
(It returns to regular indication after 20 seconds even if the MODE button is not pressed.)

FUNCTION SETTINGS

2-29. Energy saving setting on System controller

By installing System controller or System controller lite, energy saving function using electricity meters can be performed.

■ Features of energy saving function

- **Power consumption graph**
  Displays the power consumption measured by the electricity meter connected to the air conditioner by bar graph, and makes it easier to understand the power consumption conditions.
  – Power consumption data for 3 years can be saved
  – Past record can be referenced as history
  – Data of an arbitrary 2 periods can be displayed for comparison

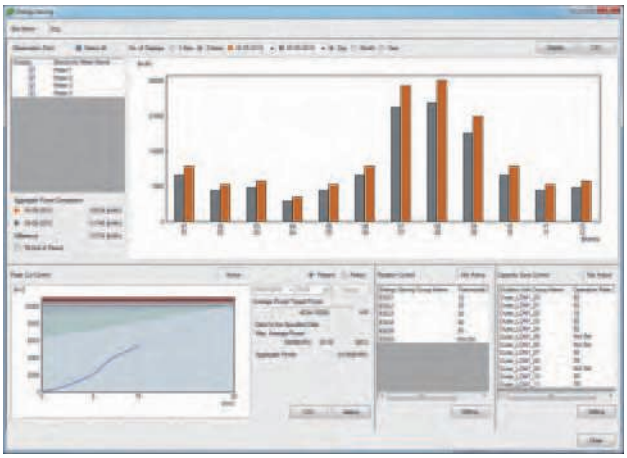

- **Indoor unit rotation operation**
  Reduces the power consumption by changing the indoor unit which is to be set forced thermostat OFF in turn.
  Operating the air conditioner even in the spring and autumn when the heat load is comparatively light may have an energy saving effect. Because it is an intermittent operation, it does not loose much comfort, and is a control which is difficult for the user of the room to sense its operation.
  – The electric power consumed in the arbitrarily defined group is reduced by changing indoor units which are set to forced thermostat OFF in turn.

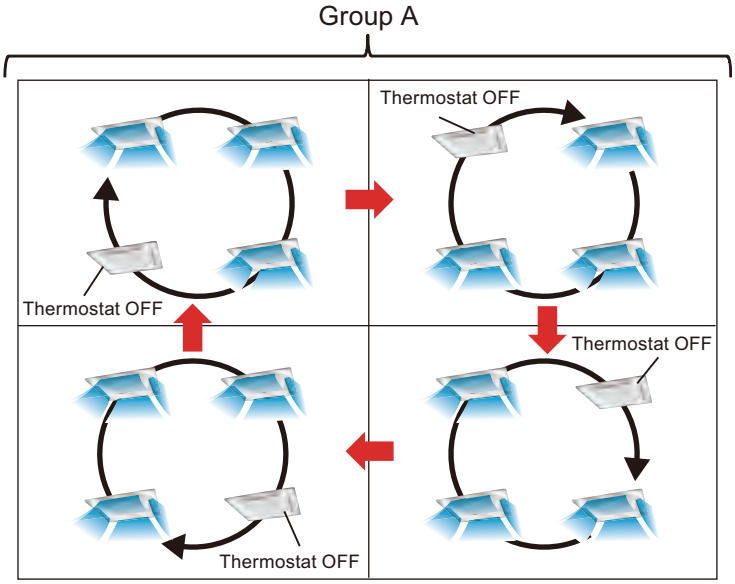

FUNCTION SETTINGS

FUNCTION SETTINGS

– Indoor units can be changed in turn according to the stoppage rate set for each group.

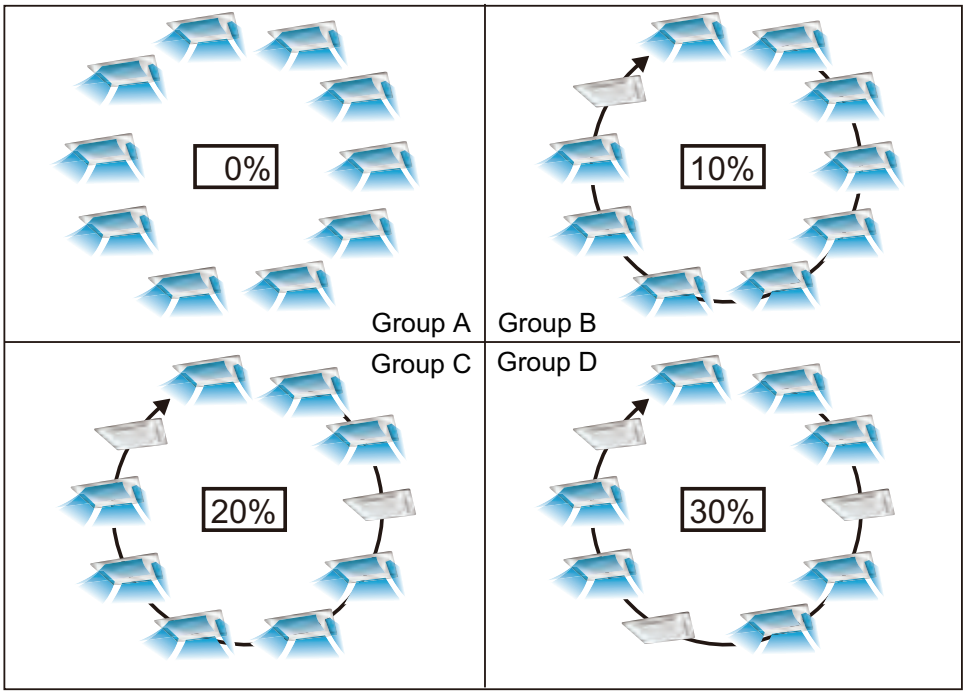

*The indoor unit operation stoppage rate can be selected from 10% to 30%.

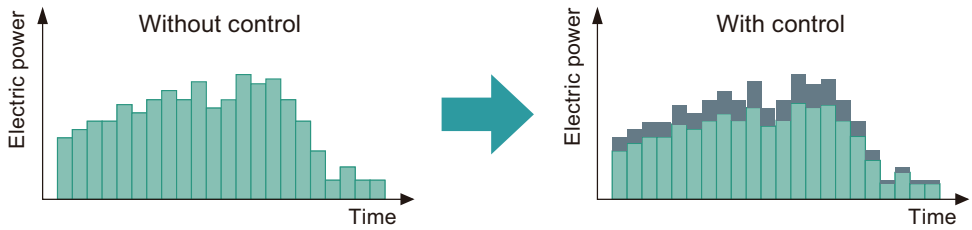

- **Outdoor unit capacity saving**
  The power consumption is reduced by limiting the upper limit of the outdoor unit capacity for each refrigerant system.
  This has a reducing effect especially in the summer, winter and other times when the heat load is high.
  In addition, because the upper limit capacity of the outdoor unit is limited directly, it is a control which easily exhibits an energy saving effect compared to rotation control. However, because the outdoor unit does not operate above the limited capacity, there may be a loss of comfort, depending on the indoor heat load. (The operation capacity upper limit rate [%] of the outdoor unit is specified for each refrigerant system.)

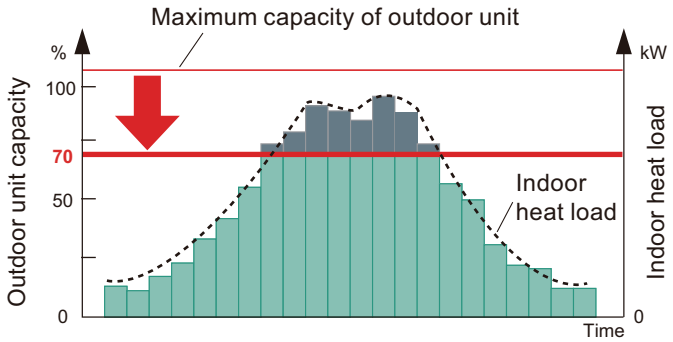

FUNCTION SETTINGS

- **Peak cut operation**

  Reduces the power consumption by setting a specific target value (maximum average power [kW]) for all the air conditioners and controlling operation so that this value is not exceeded.

  Limit control is performed in 3 steps of “Step 1: Set temperature shift” → “Step 2: Thermostat OFF” → “Step 3: Outdoor unit stop”.

  To perform this control, an electricity meter must be installed.

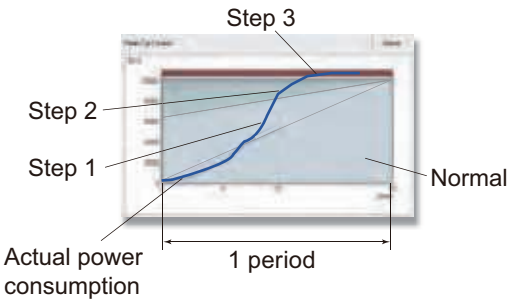

*Specifies the maximum average electric power [kW] for the entire air conditioning system.

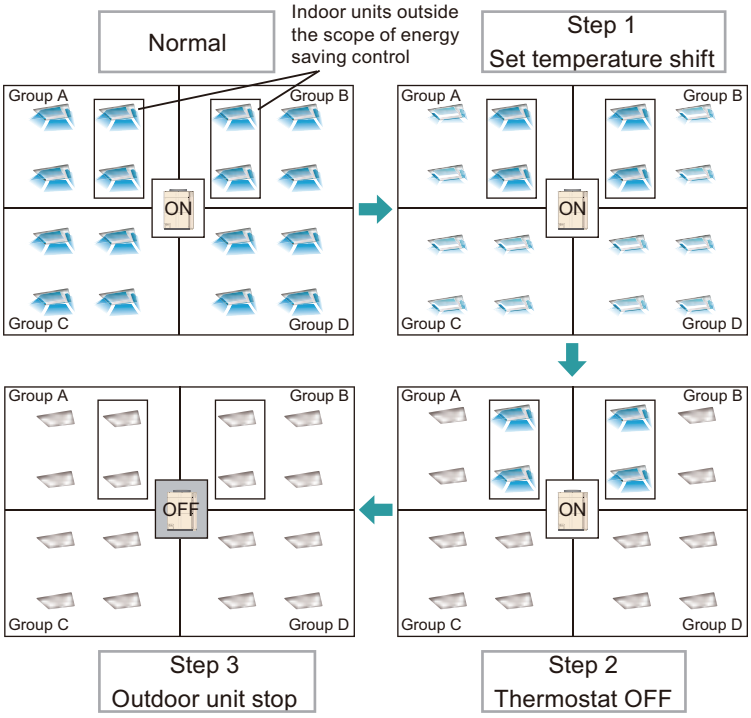

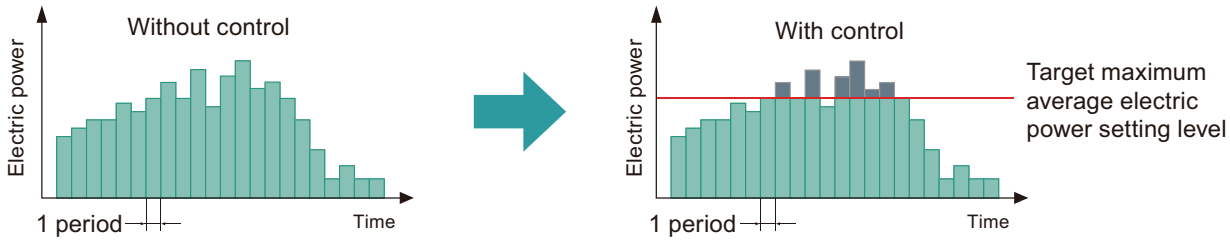

FUNCTION SETTINGS

■ General setting flow for energy saving and electricity charge apportionment using electricity meter

Description mentioned here is an example of general setting flow for performing an energy saving function and an electricity charge apportionment function using an electricity meter.

NOTE: Layout of the outdoor units and indoor units, combination of the remote controller group, and other design shall be performed separately from the following steps.

1. Understand the overview of the energy saving function and electricity charge apportionment function using an electricity meter, the usage method, and restrictions, etc.
   For details, refer to:
   - "Features of energy saving function" on page 07-148
   - "Operation example" on page 07-152
   - "Notes on energy saving function" on page 07-152
   - "Installation restriction and requirement of energy saving units" on page 07-153
   - "Electricity charge apportionment and electricity meter" on page 07-154

2. Decide following items:
   - Power source supply system
   - Electricity meter installation sites, number(s), and connecting outdoor units
   - Appropriate VT/CT specifications

   For details, refer to:
   - "Electrical wiring" on page 07-155
   - "Installation restriction and requirement of energy saving units" on page 07-153
   - "Electricity meter system" on page 07-166

3. Purchase the electricity meters and related hardware and materials.
   For details, refer to:
   - "Electrical wiring" on page 07-155

4. Perform the installation of the electricity meters and related hardware or materials.
   For details, refer to:
   - "Electrical wiring" on page 07-155

5. Perform the setting of the electricity meter.
   For details, refer to
   - "Setting of outdoor unit and System controller" on page 07-167

6. Perform the setting of the outdoor unit.
   For details, refer to:
   - "Setting of outdoor unit and System controller" on page 07-167
   - "Accessories" in Chapter 3. OUTDOOR UNITS on page 03-19

7. Perform the setting of the system controller.
   For details, refer to:
   - "Setting of outdoor unit and System controller" on page 07-167
   - System controller instruction manual

FUNCTION SETTINGS

■ Operation example

Breakdown of electricity charges in general and the corresponding operation of the system for each item is as follows.

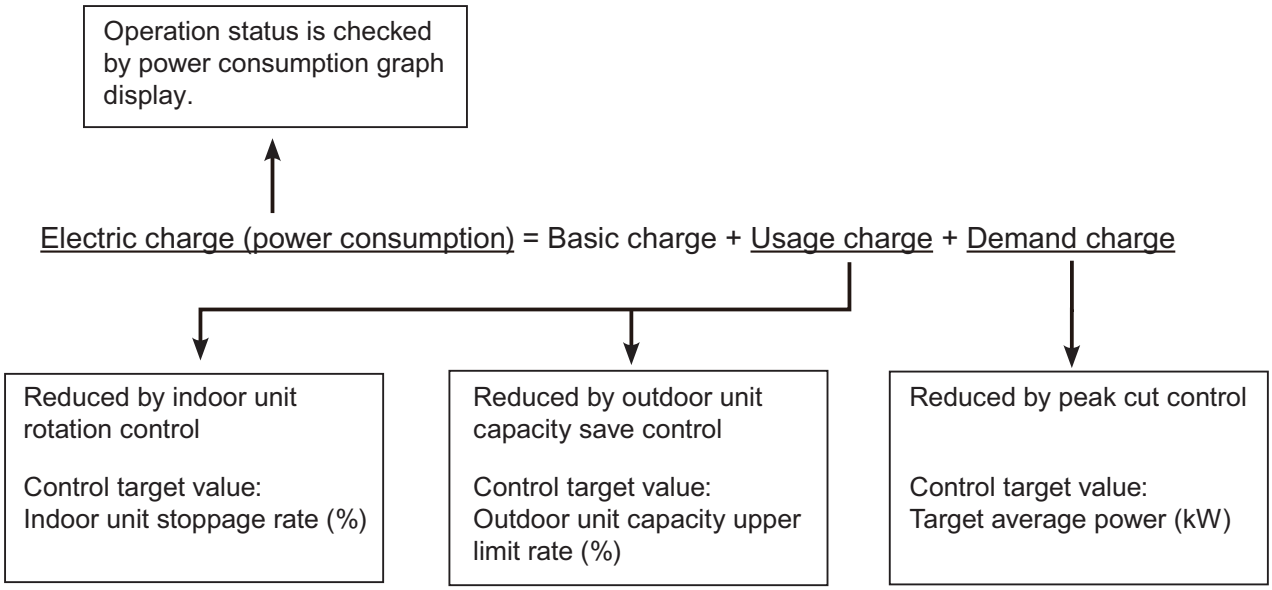

Basic charge	Charge billed according to contract with the electric power company. Includes meter reading cost and billing cost.
Usage charge	Charge billed according the power consumed.
Demand charge	Charge billed according to the scale of the contract with the electric power company.

■ Notes on energy saving function

Energy saving function precautions and scope of guarantee:
The effect of the energy saving function depends on the units used in the system, usage environment, installation environment, and so forth. Each energy saving function is not guaranteed to display a fixed effect and function for operation by specific setting. Before using the function, read and understand the following precautions.

- **How to use the energy saving function:**
  Since the effect of the energy saving function depends on the units used in the system, usage environment, installation environment, and so forth, a different effect may appear according to the building and operating period even when operated with the same settings and schedule. Try to gain an understanding of the features of each energy saving function and confirm the actual effect through operation and apply appropriate settings, etc. as required.

- **Target electric power of peak cut function:**
  These are values used as target values when performing peak cut control. These values do not always guarantee that the consumed power is within the target value. For example, even if forced thermostat off and outdoor unit stoppage are activated, the control become ineffective if the outdoor unit is performing a protective operation (oil recovery and defrosting). As a result, the electric power consumed may exceed the target electric power.

- **Relationship between unit protection and energy saving function:**
  For VRF, there are operations and restrictions for protecting units. The energy saving function operates within the range of these protective operations and restrictions. When the energy saving function performs control against these protective operations and restrictions, the protective operations and restrictions have priority and the energy saving function is either restricted or may not operate. As protective operations of units, there are oil recovery, defrosting, etc. which are automatically performed periodically or under specified conditions.

FUNCTION SETTINGS

- **Failure, etc.:**
  An energy saving function operates only when the related units are operating normally. When the power of the electricity meter and the outdoor units connected to an electricity meter and the System controller is turned off due to a failure, etc. the energy saving function will not operate normally.

- **Explaining to the building tenants:**
  During energy saving function operation, control from the remote controller may be overridden by the energy saving control. For this reason, it is recommended that the building tenants be informed of this beforehand.

■ Installation restriction and requirement of energy saving units

- **Only 1 unit may perform energy saving control at a time.**
  When energy saving control is performed by System controller (UTY-APGXZ1, UTY-PEGXZ1), stop energy saving control such as forced thermostat OFF, outdoor unit forced OFF, and outdoor unit capacity save from the building management system through the following units:
  – BACnet gateway (Software)
  – Network converter for LonWorks
  When energy saving control is performed from multiple points, trouble may occur.

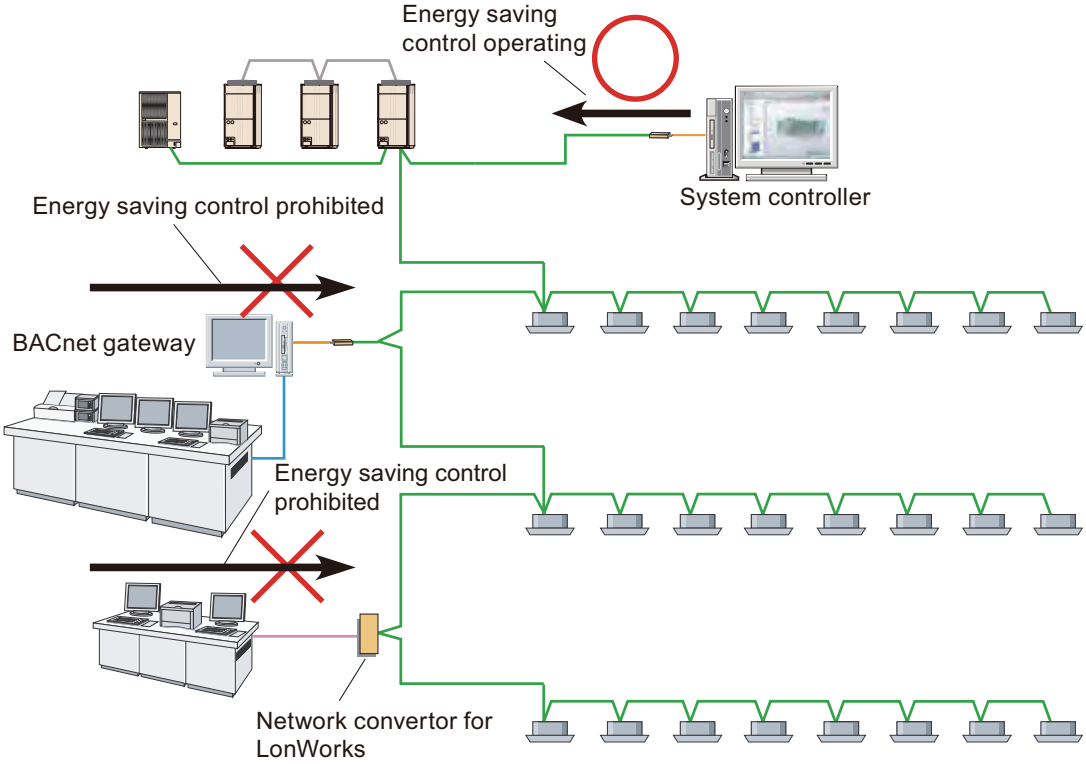

- **Electricity meter installation required for some functions.**
  For using following functions under energy saving control, installation of an electricity meter is required.
  – Power consumption graph display function
  – Peak cut control
  When these functions are necessary, install an electricity meter in advance with referring the installation manual.

FUNCTION SETTINGS

2-30. Electricity charge apportionment setting (System controller, Touch panel controller)

Electricity meters are required to use an electricity charge apportionment function. To perform the functions mentioned here, one of the controller listed below is required:

- System controller
- System controller lite
- Touch panel controller

■ Electricity charge apportionment and electricity meter

When implementing the electricity charge apportionment function in a VRF System, a configuration which does not use electricity meters or a configuration which uses electricity meters can be selected. The differences between these two configurations are explained below.

The electricity charge apportionment function apportions the power consumption to each block (tenant indoor unit) defined in advance according to the usage record, after the power consumption (electricity charge) of the air conditioners is input to the System Controller. Electricity charge apportionment calculation becomes possible only after inputting the power consumption (or electricity charge).

Electricity charge apportionment when electricity meter not used

Only after the electricity bill is received from the electric power company and the billed amount is input into the System Controller, can electricity charge apportionment for the billed period be calculated.

Electricity charge apportionment when electricity meter used

Since the power consumption data is sent from the electricity meter to the System Controller at any time, basically electricity charge apportionment calculation can be performed at any time. Because an actual System Controller calculate power charge apportionment data in one day units, electricity charge apportionment calculation can be performed at an arbitrary day in one day units.

Example 1:

When the tenants of a tenant building, etc. are billed for their air conditioning electricity charge once a month, if the electricity bill arrives from the electric power company each month, the electricity charge apportionment function can be used without electricity meters because electricity charge apportionment can be performed based on that bill and the tenants can be billed. Even if there are tenants moving in and out within a month, appropriate billing can be performed after the bill was received from the electric power company. However, when the electricity bill is received from the electric power company once every 3 months, electricity charge apportionment for 3 months cannot be calculated until the bill is received. In this case, building owner can only bill the building tenants for air conditioning electricity charges every 3 months. However, if electricity meters are installed, billing at an arbitrary interval, for example, once a month, is possible.

Example 2:

When air conditioning electricity charge is billed based on the electricity charge apportionment function for each room in hotels etc., because guests leave and arrive daily and the electricity charge is calculated each time, you cannot wait for the electricity bill to arrive from the electric power company. In such cases, it must be possible to be able to calculate electricity charge apportionment at any time using electricity meter.

FUNCTION SETTINGS

■ Electrical wiring

- **Electricity meter connection composition**
  To perform energy saving peak cut control, basically, electricity meters with pulse transmission function measuring all the power consumed by the air conditioner are necessary. Multiple meters installations are also possible as long as the number of electricity meters is within the specified limit. A general electricity meter installation configuration is shown below.

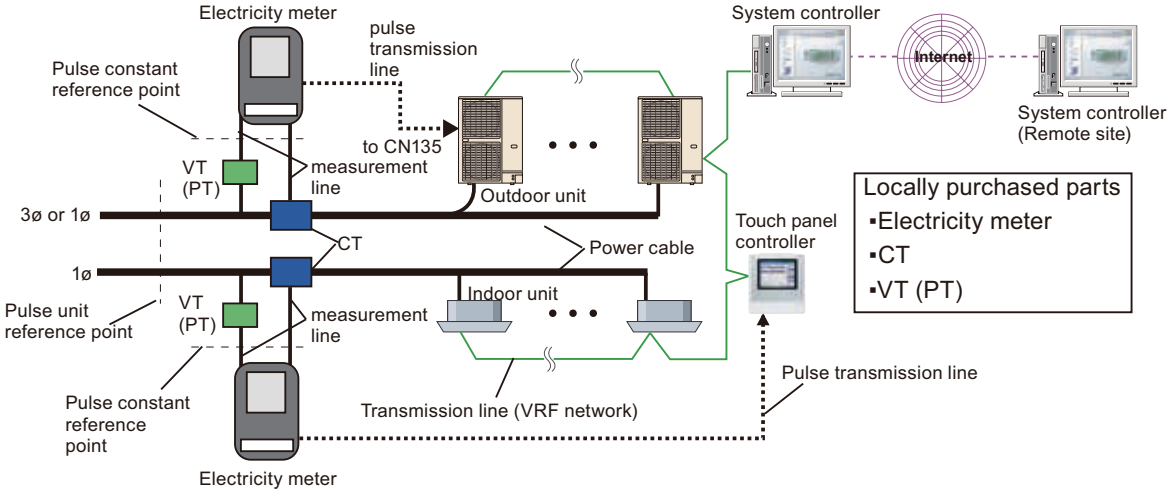

Item	Description
Electricity meter	Measures the voltage and current of the power cable to which measurement line is connected and finds the power consumption from these. In addition, pulses corresponding to the measured value are output to the transmission line.
Voltage Transformer (VT) Power Transformer (PT)	Transform the power source voltage to a measurable voltage. Transformation ratio is indicated by VT (PT) ratio. Normally unnecessary for the voltage value level used by outdoor units and indoor units.
Current Transformer (CT)	Transform the power line current value to a current measurable by an electricity meter. Transformation ratio is indicated by CT ratio. There are types which is inserted between power cables and types which are coupled to the power cables.
Pulse unit	Pulse unit indicates the relationship between electricity meter output pulse and measured power. The value specified in pulse unit indicates the power in kWh consumed on the power cable for 1 pulse. Units: kWh/pulse The value specified by pulse unit takes into account the VT and CT ratio used and corresponds to the actual power consumption itself.
Pulse unit reference point	Indicates the measurement point of the power consumption specified in pulse units.
Pulse constant	Pulse constant indicates the relationship between electricity meter measured power and output pulses. The value specified by pulse constant indicates how many pulses are equivalent to 1 kWh of power consumption input to an electricity meter. Units: pulse/kWh Because the ratio of VT and CT used is not taken into account in the value specified by pulse constant, to find the actual power consumption on the power cable, the pulse constant value must be multiplied by both the VT and CT ratio.
Pulse constant reference point	Indicates the measurement point of power consumption specified by pulse constant.

- **Selection of Electricity meter, CT, and VT**
  Select the electricity meter, CT, and VT by considering the following items:
  – Install electricity meters for each refrigerant system, if circumstances allow.
  – Select VT/CT with a small VT/CT ratio.
  – When using an electricity meter which is specified in pulse units (kWh/pulse), usually select a meter with a 1 kWh/pulse output.

FUNCTION SETTINGS

- **Outdoor unit connection interface (CN135) or touch panel controller connection interface (TM201 CH1) to electricity meter**

Item		Specifications	Remarks
Interface		Dry contact “a” contacts	“a” contacts: ON when shorted *1
Pulse	Specifications	Width: 50 ms or more Interval: 50 ms or more	
	Units	1 kWh/pulse (pulse units) recommended.	
	Constant	Considering the electricity meters available in some countries, use of electricity meters with 3,200 pulse/kWh (pulse constant) or less pulses are possible.	
Line length restriction		150 m or less	Between electricity meter and outdoor unit
Wiring specification		Control and instrumentation cable: CVV-S (Control-use Vinyl insulated Vinyl sheathed cable – Shielding) *2 2-conductor: 1.25 mm^2	
Line length restriction		25 m or less	Between electricity meter and touch panel controller
Wiring specifications		2 core, twisted pair, 0.33 mm^2 (22 AWG) *3	

*1 Pulse signal: normally OFF (open), ON (closed) when shorted

*2 When affected by interference by induction, select shielded CVV cable (CVV-S cable). This is because copper shielding tape is wrapped around CVV cable and induction interference from adjacent power cables is alleviated and normal communication is maintained. In addition, when the wiring is outdoors, select weather resistance cable.

*3 Use cable in accordance with local regulations and rules for cable.

- **Number of installing electricity meters**

Item	Specifications	Remarks
Number of installing electricity meters	Max. 200	Per site (include Max. 4 VRF systems)

FUNCTION SETTINGS

- **Installation examples of electricity meter**
  - Installation example for each refrigerant system:

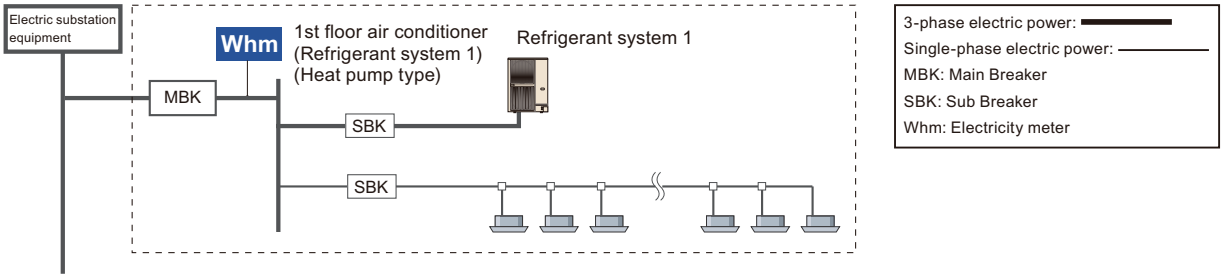

  - Installation example for indoor units and outdoor units:

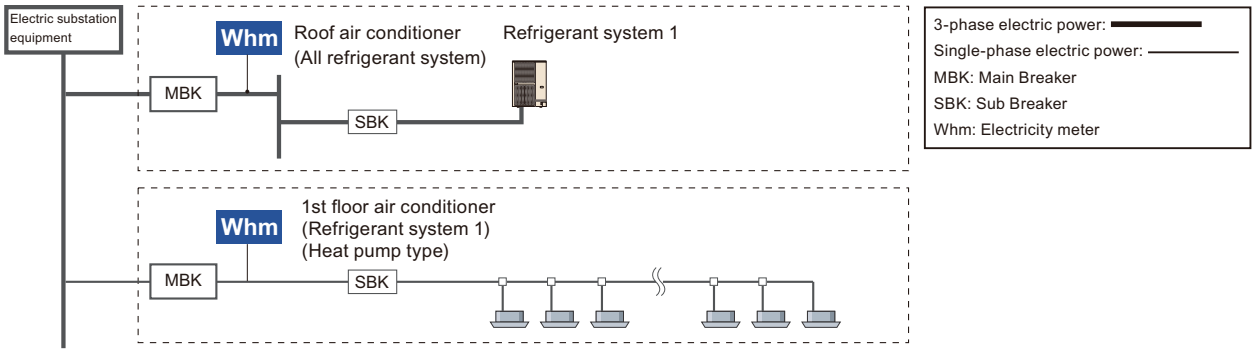

  - Installation example for each tenant:

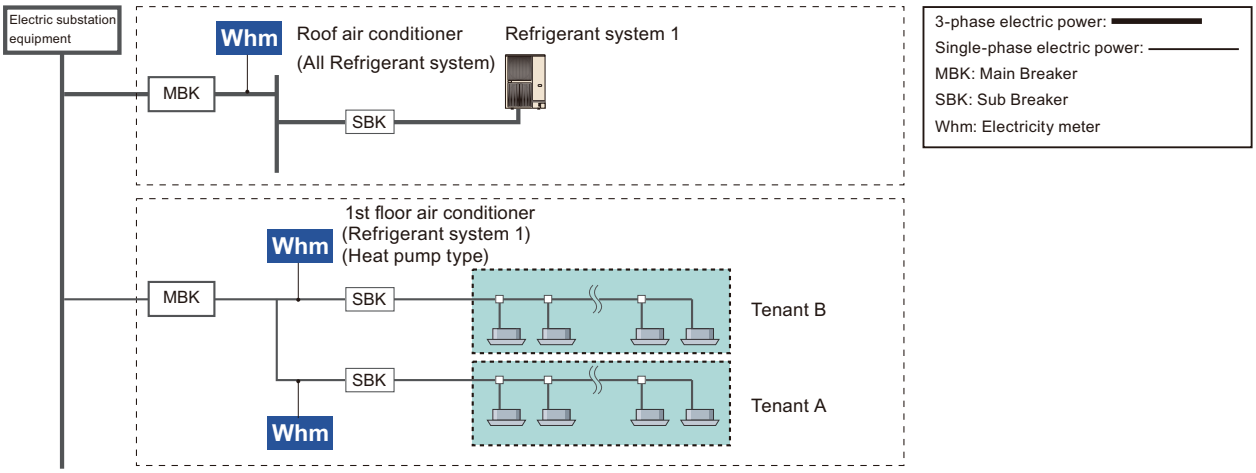

FUNCTION SETTINGS

■ Installation restriction and requirement of electricity meter

- **Functions that requires installation of electricity meter**
  To use the following functions, use an electricity meter:
  - Electricity charge apportionment
    Install for operation using an electricity meter. (Operation without an electricity meter is also possible.)
    When using an electricity meter, an electricity meter must be installed for all the units which perform apportionment calculation.
  - Peak cut control (Only for System controller)
    Installation of an electricity meter is essential.
  - Power consumption graph display (Only for System controller)
    Installation of an electricity meter is essential.

  [Installation example]

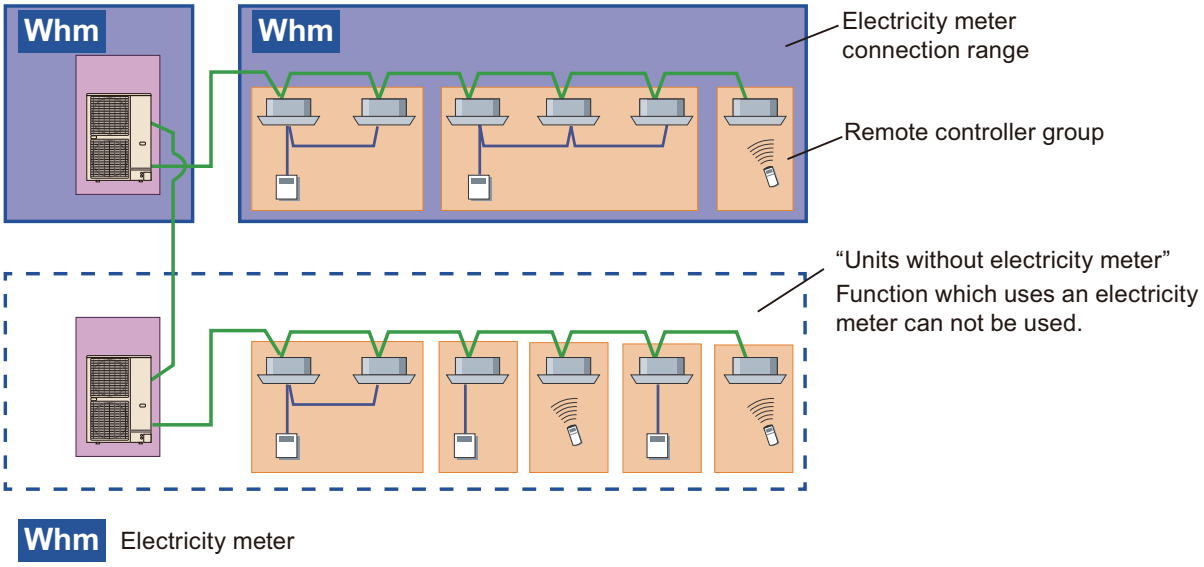

FUNCTION SETTINGS

- **Installation abstract**
  Electricity meter connection methods mentioned here can be adapted for the System controller and Touch panel controller (TPC). However, the setting restrictions mentioned here must be observed.
  – Multiple VRF networks can be connected to 1 electricity meter. (with network crossover)

NOTE: Combination of UTY-ALGXZ1 and UTY-PLGXE2 does not multiple VRF networks.

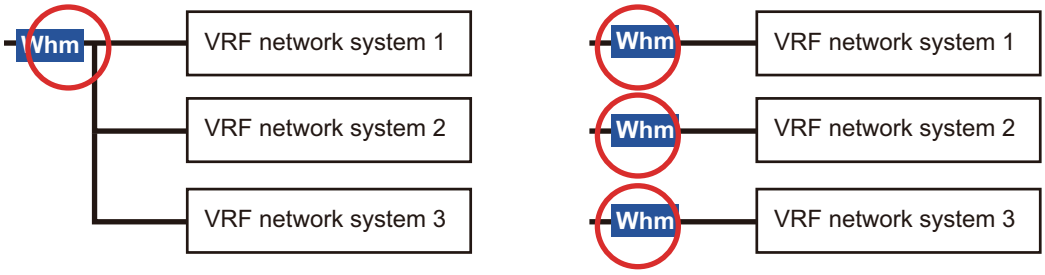

– With the electricity charge apportionment function, an electricity meter system cannot span TPC.

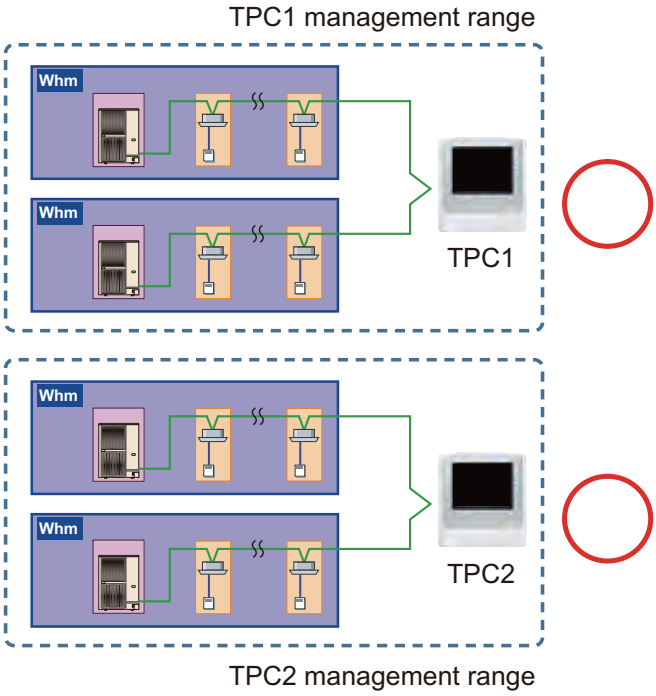

Create an electricity meter system within the range of the units managed by each TPC.

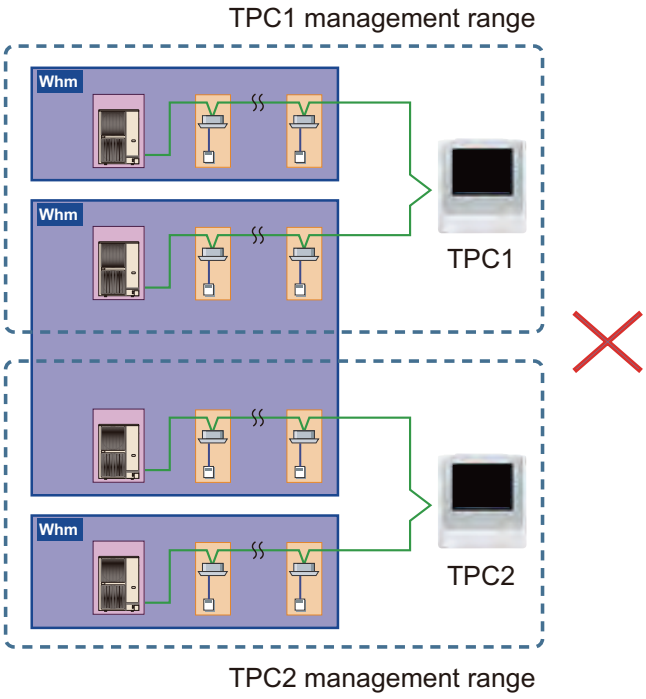

An electricity meter system spanning units managed by TPC cannot be created.

FUNCTION SETTINGS

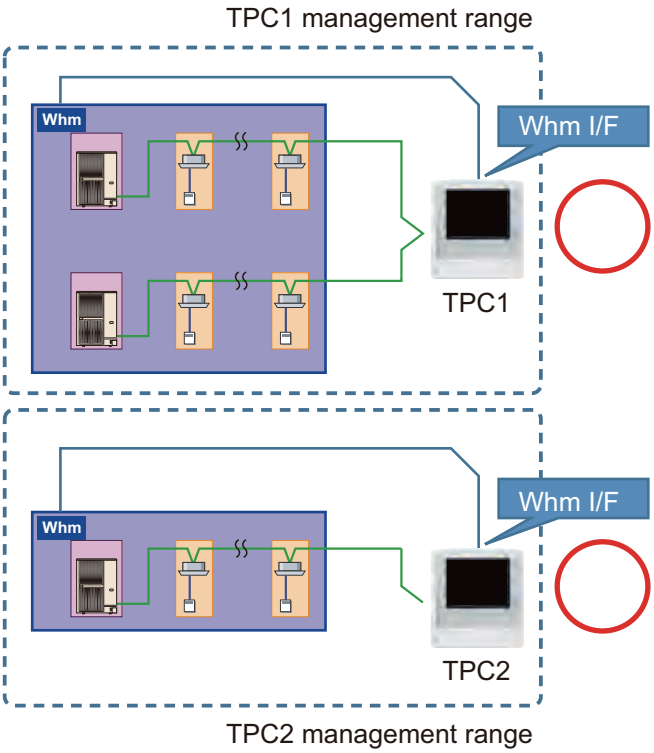

Connect the electricity meter that measures the units managed by the appropriate TPC to the electricity meter I/F belonging to the TPC main unit.

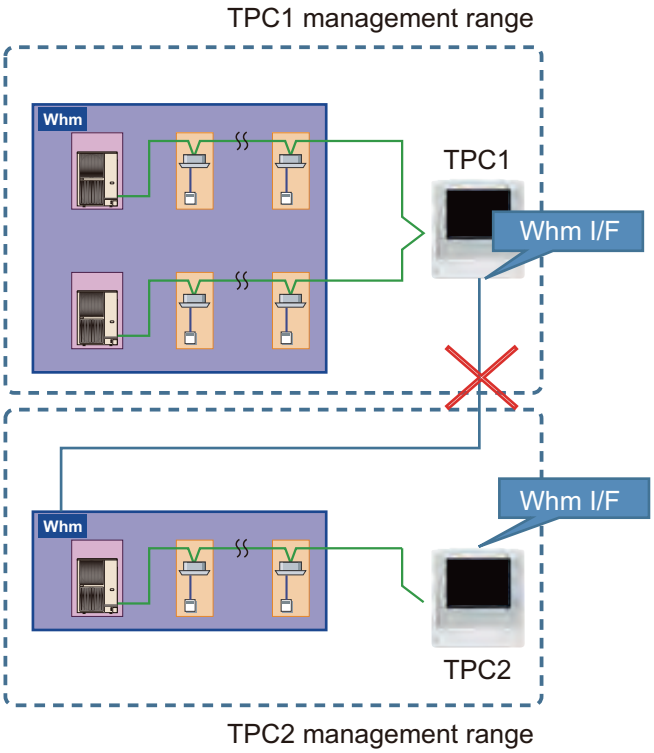

FUNCTION SETTINGS

– Installation crossing over refrigerant system is possible.

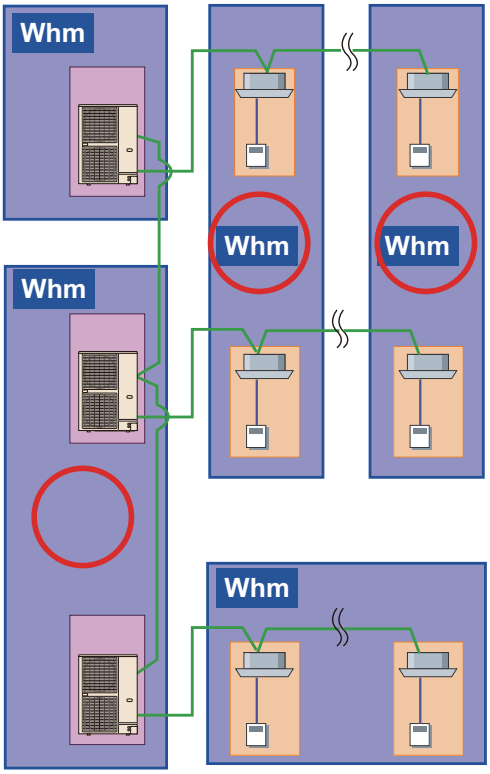

– Outdoor unit/indoor unit mixed in 1 electricity meter is possible.

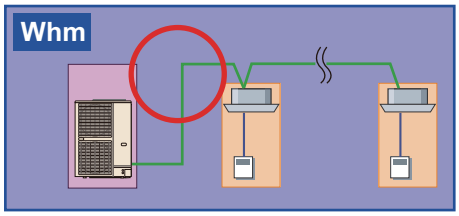

– There are no restrictions on outdoor units which connect an electricity meter.
An arbitrary electricity meter can be connected to an arbitrary outdoor unit.

FUNCTION SETTINGS

- **Installation restriction**
  Install electricity meters in accordance with the following restrictions:
  - Install an electricity meter only to air conditioners which are the target of the function. When electric lights and other OA equipment are connected to the electricity meter, also their power consumptions are calculated.
    Connect electricity meters to only the necessary air conditioners.
  - An electricity meter cannot be connected to S series and V series units because they are not electricity meter supported.
  - Electricity meter supported/unsupported units cannot be mixed under 1 electricity meter. (Because the available functions are different.)
    When connecting single type air conditioners via Network converter (UTY-VGGXZ1), separately connect the electricity meter to VRF air conditioners because there are some functions that are electricity meter unsupported such as Electricity charge apportionment function*1 or Energy saving function*2. However, UTY-VGGXZ1 which connects a group remote controller is an exception.

    *1: The electricity charge apportionment function cannot be used with single types air conditioners which are connected to a network converter.

    *2: In the peak cut control, though the power will be included in the target power, the actual control will not be performed.

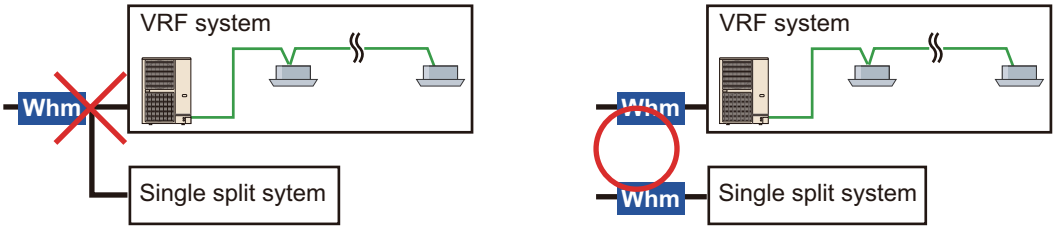

  - Electricity power meters cannot be nested
    Installation of the meters themselves is possible, but use only 1 electricity meter for the System controller. (If both are used, the power consumption will be measured twice.)

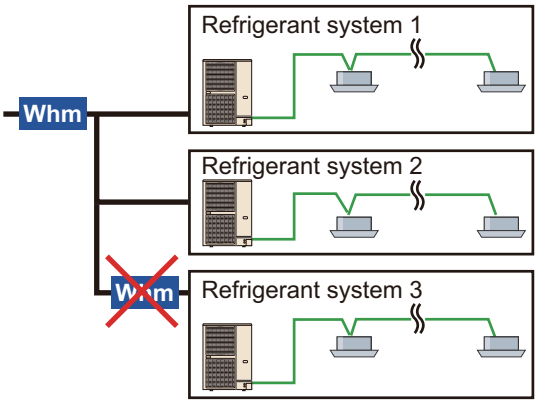

  - The externally linked units* shall be connected to the same electricity meter as the air conditioner to which they are connected.
    *: General-purpose unit which performs calculation as an externally linked unit by electricity charge apportionment function.

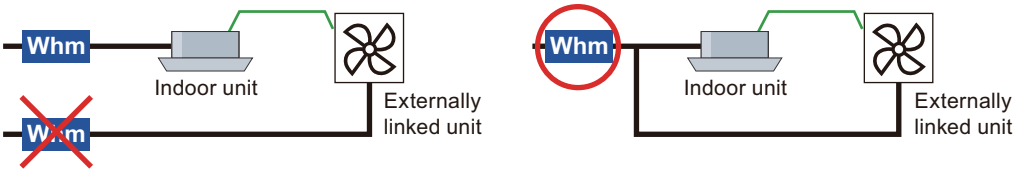

FUNCTION SETTINGS

– Installation of electricity meter which divides remote control groups is prohibited.

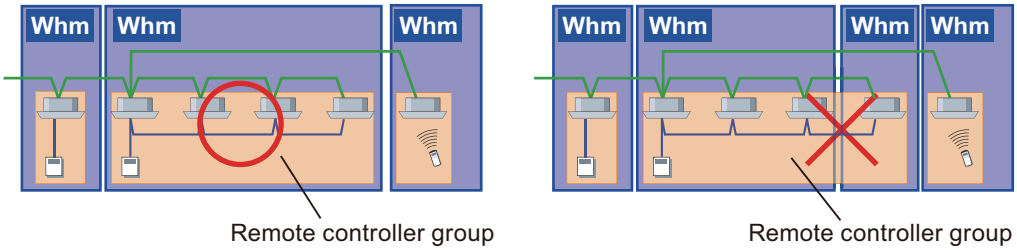

– Installation of electricity meter which crosses the contract is prohibited.
When an electricity meter is used by electricity charge apportionment function, install the electricity meter so that it does not cross over the “contract setting” set by electricity charge apportionment.

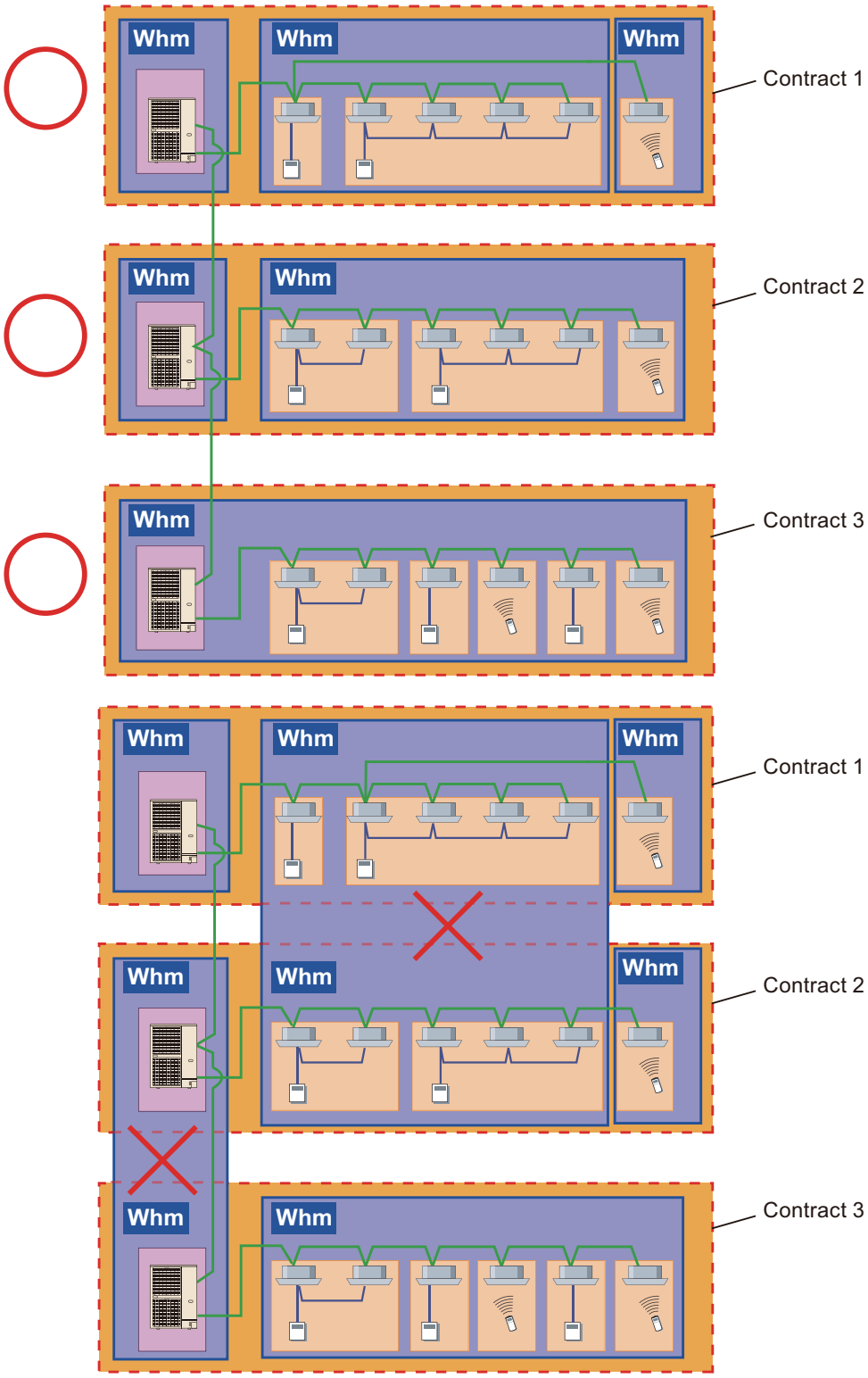

FUNCTION SETTINGS

– When performing apportionment calculation using electricity meter
The electricity meter shall be connected to the necessary air conditioners which are the target of calculation by the electricity charge apportionment function.
When an electricity meter is not connected, electricity charge apportionment calculation using an electricity meter may not be possible.

- [Electricity charge apportionment with outdoor unit only]
  --> Connect the electricity meter to the outdoor unit.

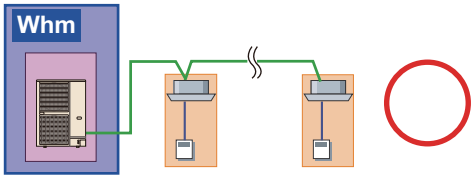

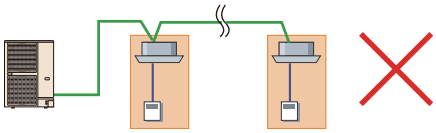

Electricity meter is not connected to outdoor unit

- [Outdoor unit + indoor unit electricity charge apportionment]
  --> Connection of an electricity meter to the outdoor unit and indoor unit is necessary.

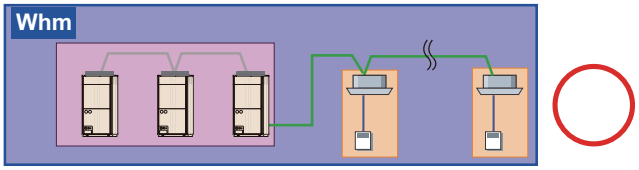

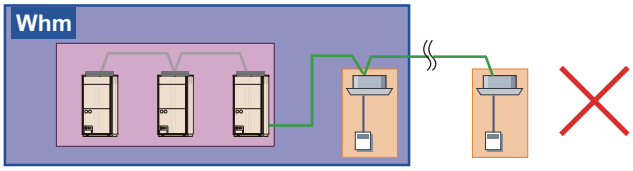

Electricity meter is not connected to some indoor units

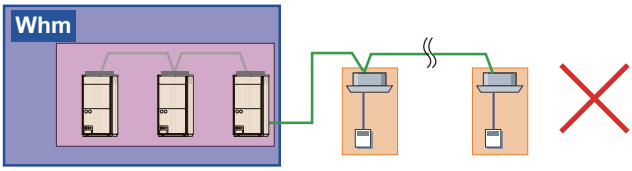

Electricity meter is connected to outdoor unit only even though outdoor unit + indoor unit electricity charge apportionment is performed

FUNCTION SETTINGS

– Electricity apportionment for DX kit

[When electricity meter not connected]

The following units can be linked to the DX-Kit, by using external output terminals.

[A]: External fan

[B]: Units linked to run/stop state external output

At electricity apportionment, the DX-Kit itself and units [A] and [B] mentioned above can be handled. Set the electricity value at ON beforehand for the units [A] and [B] from the “Parameter Setting” screen. The input value is included in the calculation as a constant value when the external output terminal is ON.

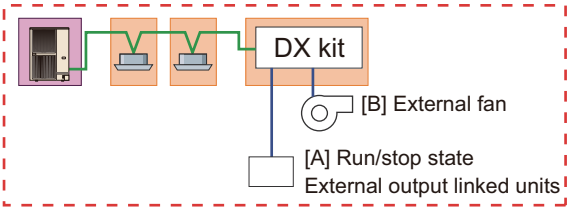

[When electricity meter is connected]

At electricity apportionment, the DX-Kit itself and units [A] and [B] mentioned above can be handled the same as when an electricity meter is not connected. Set the electricity value at ON beforehand for the units [A] and [B] from the “Parameter Setting” screen and install the electricity meter so that the units [A] and [B] are included. The input value in the calculation as a constant value when the external output value is ON is included.

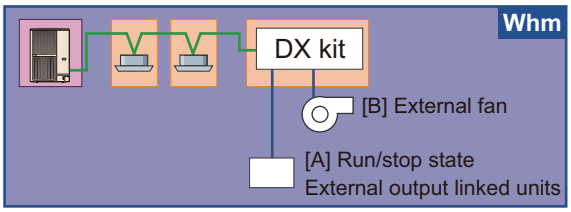

The electricity meter is installed so that the units [A] and [B] are included.

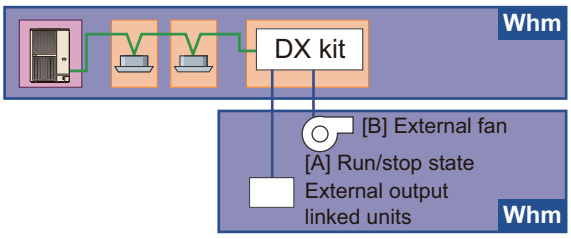

The electricity meter is installed independently from the units [A] and [B].

If there is a unit related to the DX-Kit other than [A] and [B], if the DX-Kit is connected as an independent electricity meter system and installed so that other units are included, it may be included in electricity charge apportionment. (All the value of that electricity meter is charged to the DX-Kit.

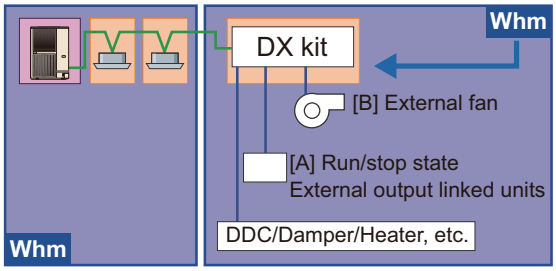

The electricity meter is installed so that [A], [B], and other units are included.

FUNCTION SETTINGS

FUNCTION SETTINGS

Units other than [A] and [B] must not be connected to an electricity meter together with other indoor units. If connected, the electricity amount of DDC, damper and heater is also charged to the other indoor units.

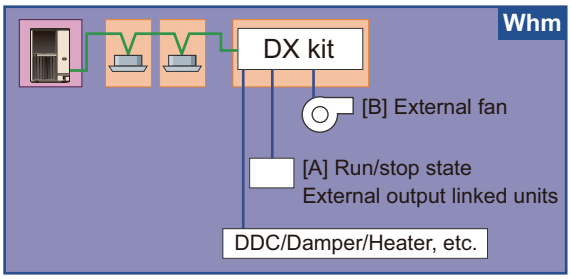

The electricity meter is installed so that the units other than [A], [B] and indoor units are included.

■ Electricity meter system

Electricity meter system is the connection configuration of 1 electricity meter and the air conditioner units which are connected to the power line under it. This is set on the System controller.

Set the System controller to match the actual electricity meter installation configuration.

Since the electricity charge apportionment function and energy saving function perform the control using the power consumption data from an electricity meter, it is necessary to set an electricity meter system on the System controller.

When installing electricity meters as shown below, 5 electricity meters systems are set as follows.

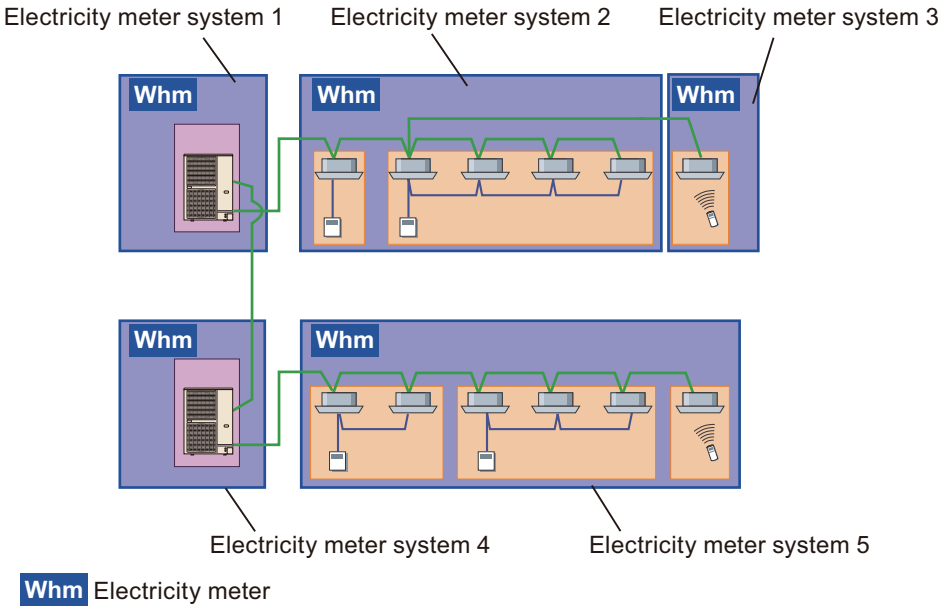

■ Setting of outdoor unit and System controller

To obtain the appropriate power consumption by System controller, the power value measured by an electricity meter must be properly conveyed. To do this, appropriate setting at the electricity meter, outdoor unit, and System controller is necessary.

The method of setting the pulse from the electricity meter received by an outdoor unit and the method of setting the pulse value set by System controller are described here. When electricity meter setting is necessary, perform it in accordance with the instruction manual supplied with the electricity meter.

Below, the setting method of electricity meters specified in pulse units and that specified in pulse constant are described.

FUNCTION SETTINGS

- When electricity meter used is specified in pulse units
  The connection configuration is shown below.

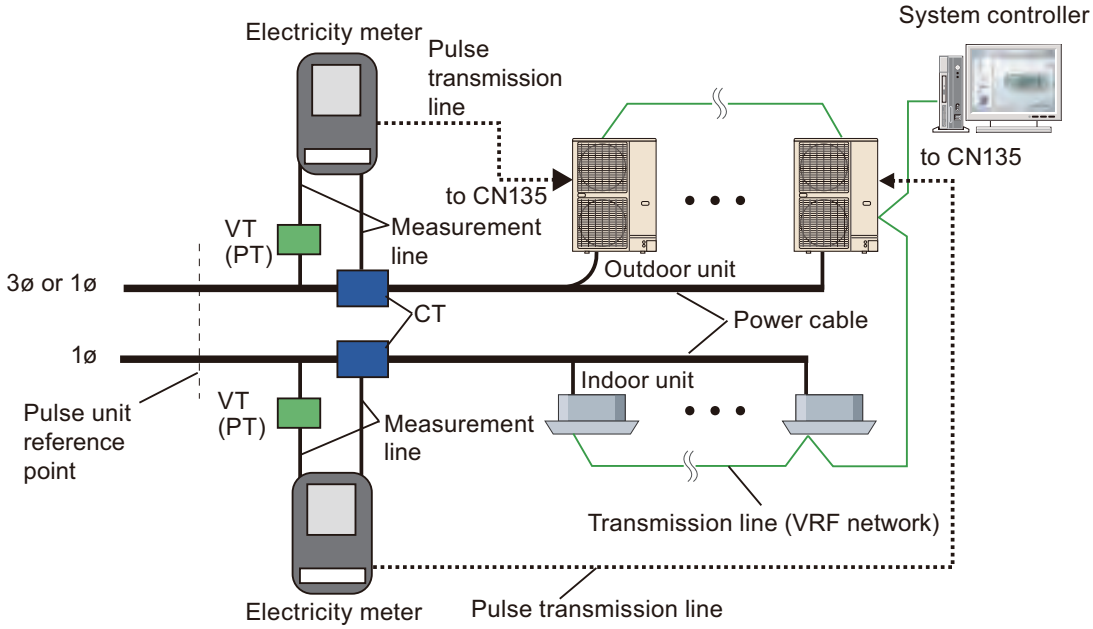

For the electricity meter specified in pulse units, the output pulses are normalized in advance (normally 1 kWh/pulse) and is output. In this case, the settings are as follows:

Set point	Set item	Set value	Description	Remarks
Electricity meter	Set in accordance with the product manual.	—	When there is a product unique setting, setting is performed in accordance with the product manual. (Pulse units value, VT/CT ratio, output coefficient, etc.)	
Outdoor unit	Meter no. setting	Arbitrary	Set an unique electricity meter no. for electricity meter identification.	The information will become necessary when setting System controller later. Refer also to "Setting on outdoor unit PCB" on page 07-67.
	Electricity meter pulse setting	1	Fixed to “1”. When 1 pulse comes from the electricity meter, the outdoor unit communicates “1” to the System controller.	
System controller	Electricity meter system setting	Units measured by electricity meter	Set the outdoor unit and indoor unit, measured by the electricity meter of the meter no. set at the outdoor unit.	The value set by each outdoor unit is used.
	Pulse setting	Electricity meter pulse units value (Usually either of 1, 10, or 100 [kWh/ pulse])	Set the pulse units specified by the electricity meter as they are. Set the number of kWh that corresponds to the “1” communicated from the outdoor unit.	Refer to the value set by each outdoor unit.

[Setting example]

Equipment conditions:

VT ratio=1 (not used), CT ratio=50 (250/5 A), electricity meter=1 kWh/pulse

Set value:

Electricity meter pulse setting=1 (fixed), pulse setting=1 (corresponds to electricity meter used)

FUNCTION SETTINGS

- When electricity meter used is specified by pulse constant
  The connection configuration is shown below.

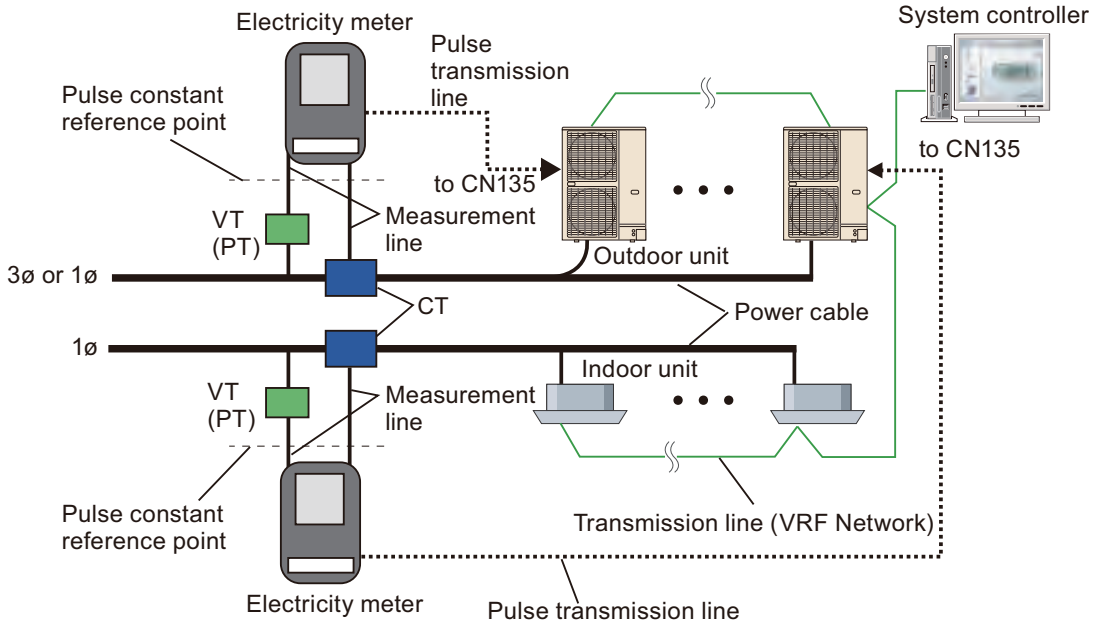

For the electricity meter specified by pulse constant, the power consumption indicated by output pulse must be corrected by VT/CT ratio. In this case, the settings are as follows:

Set point	Set item	Set value	Description	Remarks
Electricity meter	Set in accordance with the product manual.	—	When there is a product unique setting, setting is performed in accordance with the product manual. (Pulse constant value, output coefficient, etc.)	
Outdoor unit	Meter no. setting	Arbitrary	Set an unique electricity meter no. for electricity meter identification.	The information will become necessary when setting System controller later. Refer also to "Setting on outdoor unit PCB" on page 07-67.
	Electricity meter pulse setting	The pulse constant value / (VT ratio × CT ratio). However, truncated after the decimal point	Set the approximate number of power meter pulses that are equivalent to 1 kWh. When set number of pulses come from the electricity meter, the outdoor unit communicates “1” to the system controller.	
System controller	Electricity meter system setting	Units measured by electricity meter	Set the outdoor unit and indoor unit, measured by the electricity meter of the meter no. set at the outdoor unit.	The value set by each outdoor unit is used.
	Pulse setting	(Electricity meter pulse setting value) × (VT ratio × CT ratio) / pulse constant Values after the decimal point must be also input.*	Set the standard number of kWh for the value communicated from the outdoor unit. Set the number of kWh that corresponds to the “1” communicated from the outdoor unit.	Refer to the value set by each outdoor unit.

*: Input up to 6 decimal digits

[Setting example]

Equipment conditions:

VT ratio=1 (not used), CT ratio=500(2500/5 A), electricity meter=3,200 pulse/kWh

Set value:

Electricity meter pulse setting=6 (3200/ [1 × 500]), Pulse setting=0.9375 (6 × [1 × 500]/3200) For details, refer to the calculating formula of the table above.

FUNCTION SETTINGS

FUNCTION SETTINGS

Refrigerant R410A INVERTER

AIRSTAGE™ Variable Refrigerant Flow System

8. EXTERNAL INPUT AND OUTPUT

CONTENTS

8. EXTERNAL INPUT AND OUTPUT

1. Design precautions 08-1

2. Outdoor unit 08-2

2-1. Component location.....08-2
2-2. Wiring specifications.....08-3
2-3. External input.....08-3
2-4. External output 08-5
2-5. Optional parts 08-6
2-6. Function summary of outdoor unit external input/output.....08-7

3. Indoor unit 08-8

3-1. External input.....08-9
3-2. External output 08-22
3-3. Optional parts 08-25
3-4. Function summary of indoor unit external input and output 08-26

4. Controller 08-27

4-1. Touch panel controller 08-27
4-2. Central remote controller (UTY-DCG∗Z∗).....08-32
4-3. Function summary of controller external input/output 08-38

1. Design precautions

Cable length regulations:

Maximum length for each cable in-between the units are as follows:

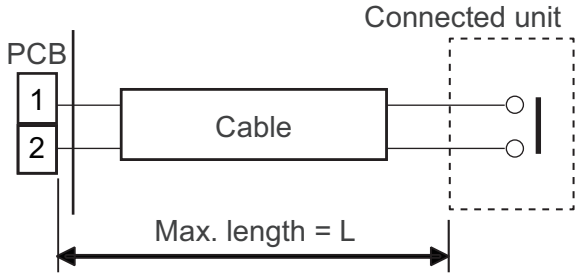

Type	L (m)	
	Input	Output
Outdoor unit	150	150
Indoor unit	150	25
Touch panel controller	25	25
Central remote controller	25	25

EXTERNAL INPUT AND OUTPUT

2. Outdoor unit

External input and output functions and related components are as follows:

		Function	Connector	External connect kit (Optional parts)
External input	1	Low noise mode	CN131	UTY-XWZXZ6
	2	Cooling/Heating priority	CN132	
	3	Outdoor unit operation peak control	CN133	
	4	Emergency/batch stop	CN134	
	5	Electricity meter pulse	CN135	UTY-XWZXZF
External output	1	Error status	CN136	UTY-XWZXZ6
	2	Operation status	CN137	
	3	Base heater	CN115	UTY-XWZXZ9

RELATED LINKS

"Component location" on page 08-2
"Wiring specifications" on page 08-3
"External input" on page 08-3
"External output" on page 08-5
"Optional parts" on page 08-6
"Function summary of outdoor unit external input/output" on page 08-7

2-1. Component location

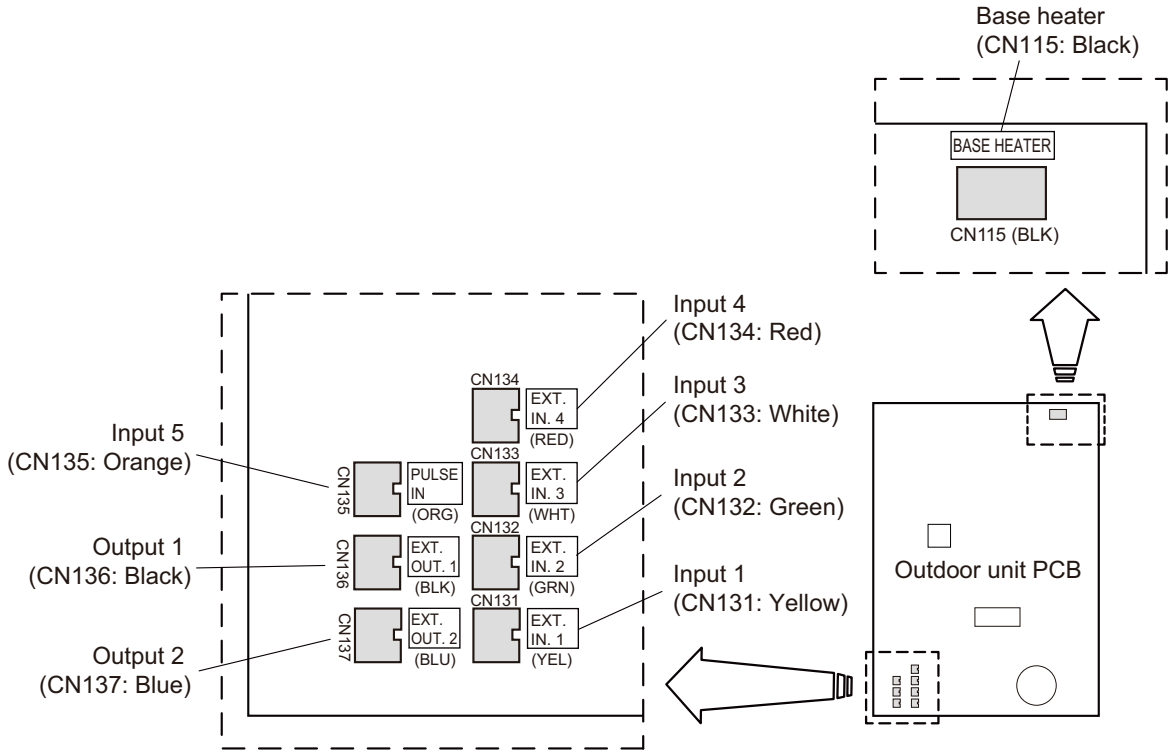

EXTERNAL INPUT AND OUTPUT

2-2. Wiring specifications

Use an external input and output cable with appropriate external dimension, depending on the number of cables to be installed.

Cable type	Cable size	Max. cable length
Twisted pair cable	0.33 mm^2 (22 AWG)	150 m

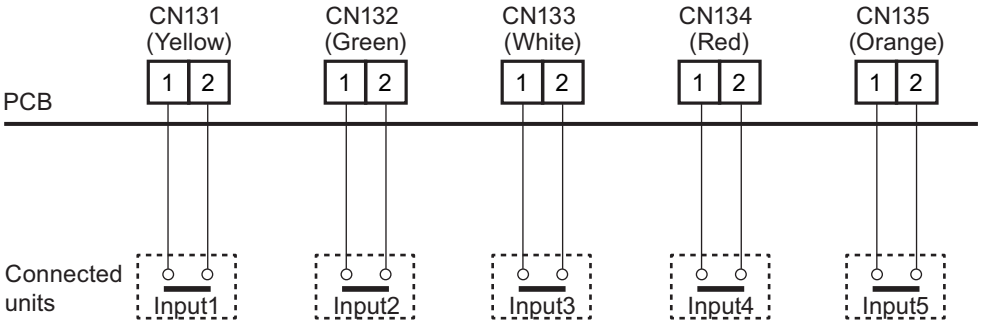

For each input, pin no.1 is of positive polarity and pin no.2 is of ground level.

2-3. External input

Setting to Low noise mode, Cooling priority/Heating priority selection, Outdoor unit operation peak control, Batch/Emergency stop, and Electricity meter pulse are possible from the outside.

Connector	Input signal	Status	Outdoor unit
CN131 (Yellow)	Off	Normal operation	○
	On	Low noise mode operation	
CN132 (Green) *1	Off	Cooling priority	○
	On	Heating priority	
CN133 (White)	Off	Normal operation	○
	On	Outdoor unit operation peak control	
CN134 (Red)	Off	Normal operation	○
	On	Batch stop or Emergency stop operation *2,*3	
CN135 (Orange) *4	No pulse	No information from electricity meter	○
	Pulse	Power usage information from electricity meter	

*1: The external input priority mode must be set by pressing push button on outdoor unit PCB.

*2: Batch stop or Emergency stop pattern can be selected by pressing push button on outdoor unit PCB.

*3: The emergency stop function mounted in the equipment does not guarantee the regulations of each country. For this reason, sufficient checking is necessary regarding use. Especially, since the fact that the equipment may not be emergency-stopped in the case of breaking of the wiring to the external input terminals and communication line, communication error due to noise, VRF external input circuit trouble, etc. must be considered, the provision of double measures that add direct interruption of the power supply by switch, etc. is recommended as a precaution.

*4: The width of Pulse input signal to CN135 must be 50 ms or more, and the interval of the signal must be 50 ms or more.

EXTERNAL INPUT AND OUTPUT

- **When function setting is Batch stop mode:**

Connector	Input signal	Command
CN134	Off → On	Batch stop
	On → Off	—

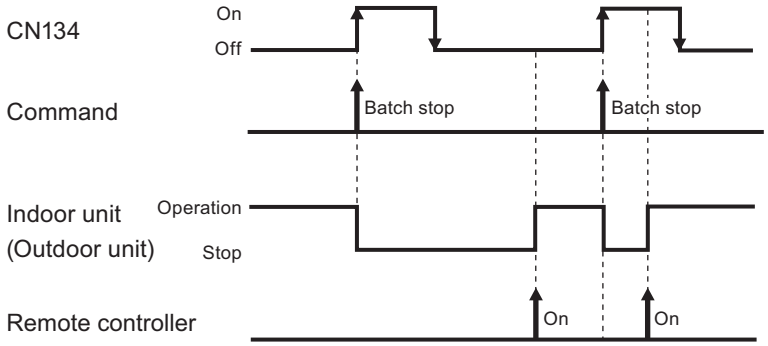

NOTES:

- All indoor units of same refrigerant system stops when Batch stop operates.
- After batch stop operates, the operation by remote controller is possible.

- **When function setting is Emergency stop mode**

Connector	Input signal	Command
CN134	On	Emergency stop
	Off	Normal

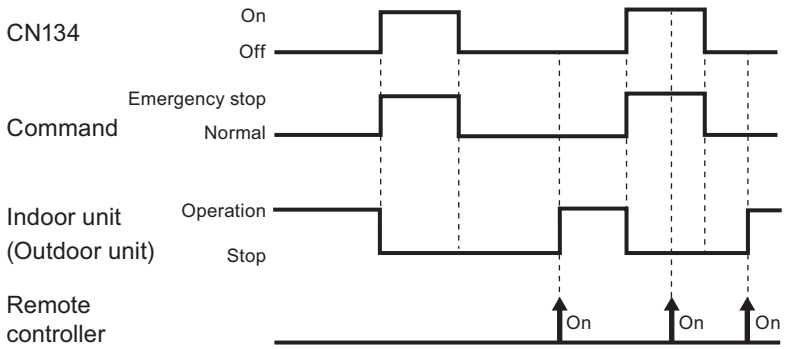

NOTES:

- All indoor units of same refrigerant system stops when Emergency stop operates.
- When the Emergency stop is triggered, indoor unit stops and Start/Stop operation by a remote controller is restricted.

EXTERNAL INPUT AND OUTPUT

2-4. External output

Connector	Output signal	Status
CN136 (Black)	0 V	Normal
	DC 12 to 24 V	Error
CN137 (Blue)	0 V	Stop
	DC 12 to 24 V	Operation

■ Error status

This output indicates Normal or Error status of the outdoor unit and connected indoor units.

As for the required wiring specifications, refer to "Wiring specifications" on page 08-3.

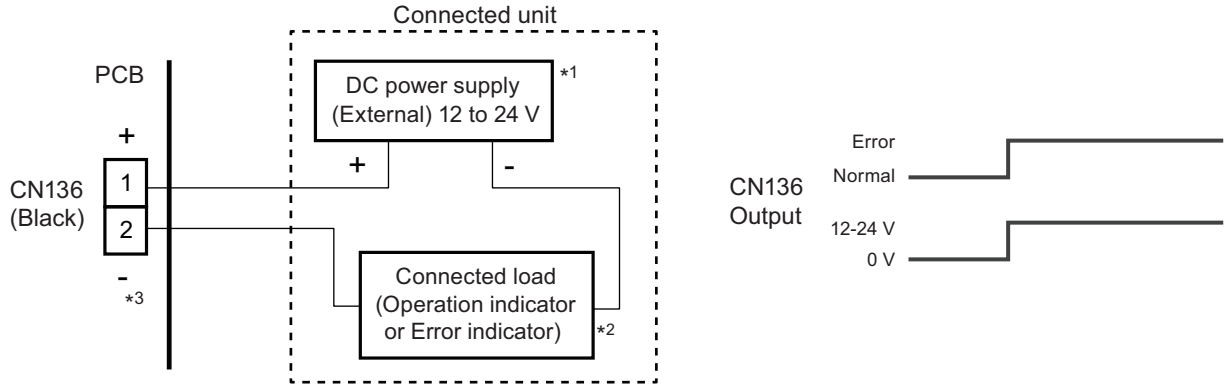

*1: Provide a DC 12 to 24 V power supply. Select a power supply capacity with an ample surplus for the connected load. Do not impress a voltage exceeding 24 V across pins 1 to 2.

*2: The allowable current is 30 mA or less. Provide a load resistance such that the current becomes 30 mA or less.

*3: Polarity is “+” for pin no. 1 and “-” for pin no. 2. Connect correctly.

■ Operation status

This output indicates Operation status of the outdoor unit.

As for the required wiring specifications, refer to "Wiring specifications" on page 08-3.

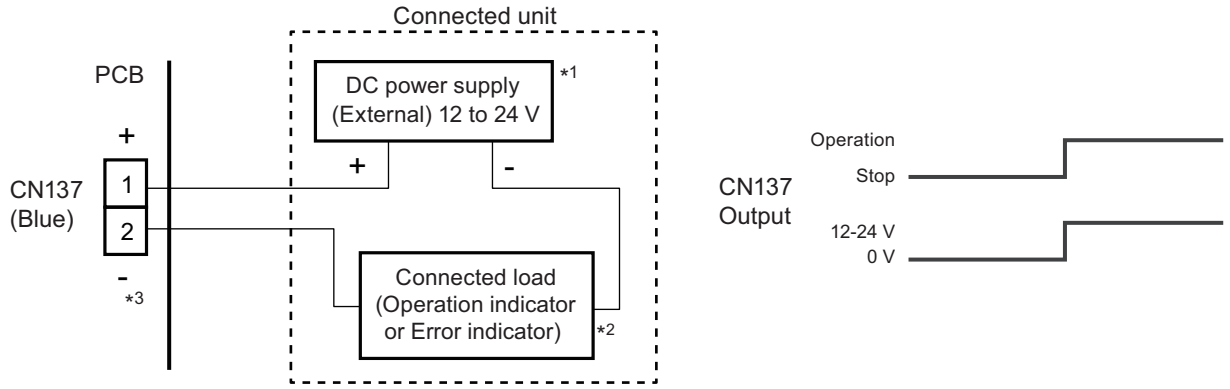

*1: Provide a DC 12 to 24 V power supply. Select a power supply capacity with an ample surplus for the connected load. Do not impress a voltage exceeding 24 V across pins 1 to 2.

*2: The allowable current is 30 mA or less. Provide a load resistance such that the current becomes 30 mA or less.

*3: Polarity is “+” for pin no. 1 and “-” for pin no. 2. Connect correctly.

EXTERNAL INPUT AND OUTPUT

■ Base heater

This is the output signal for base heater.

- The output signal is on under all of the following conditions.
  - The outdoor temperature goes down below 2°C
  - The outdoor unit is operating
- The output signal is off under any of the following conditions.
  - The outdoor temperature is over 4°C
  - The outdoor unit is stopped

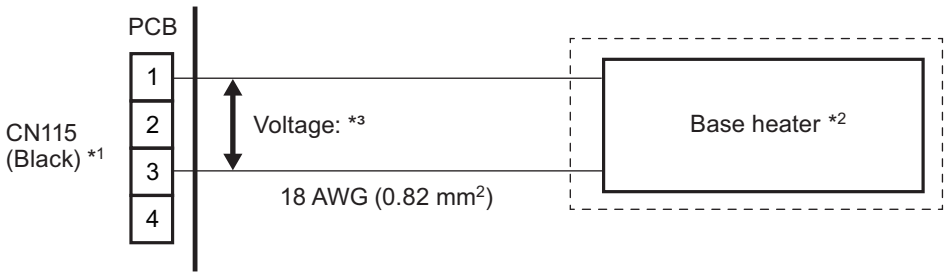

*1: Connect to pin no.1 and pin no.3. No connection to pin no.2 and pin no.4.

*2: The allowable current is 1 A or less.

*3: Refer to the value of terminal output voltage written in "Outdoor unit external output function" on page 08-7.

2-5. Optional parts

External connect kit			
Model name	**Exterior**	**Q'ty**	**Usage**
UTY-XWZXZ6	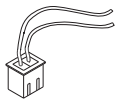	1	For external input. (Low noise mode, Cooling/Heating priority, Outdoor unit operation peak control, Emergency/ Batch stop)
			For external output. (Error status, Operation status)
UTY-XWZXZ9	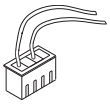	1	For external output. (Base heater)
UTY-XWZXZF	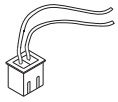	1	For external input. (Electricity meter pulse)

EXTERNAL INPUT AND OUTPUT

2-6. Function summary of outdoor unit external input/output

■ Outdoor unit external input function

Dry contact/ Apply voltage		Dry contact DC 12 V				—
Function	Emergency stop	—	—	—	● (20-01)	—
	Low noise mode operation	● *1	—	—	—	—
	Cooling/Heating priority	—	●	—	—	—
	Outdoor unit operation peak control	—	—	● *2	—	—
	Batch stop	—	—	—	● (20-00)	—
	Power usage information from electricity meter	—	—	—	—	●
Specifications	Terminal	CN131 (Pin1-2)	CN132 (Pin1-2)	CN133 (Pin1-2)	CN134 (Pin1-2)	CN135 (Pin1-2)
	Signal type	Edge				Pulse

*1: When using this function, select appropriate level from the following options:
- 42-00 Low noise level 1 (lower than rated value)
- 42-01 Low noise level 2 (lower than level 1)

*2: When using this function, select appropriate level from the following options:
- 30-00 Energy saving level 1 (Stop)
- 30-01 Energy saving level 2 (Operated at 40% capacity)
- 30-02 Energy saving level 3 (Operated at 60% capacity)
- 30-03 Energy saving level 4 (Operated at 80% capacity)
- 30-04 Energy saving level 5 (Operated at 100% capacity)

NOTES:
- For selecting relay, minimum permissible load must be less than 1 mA.
- When using Apply voltage, take “+” polarity for Pin 1.
- Number inside bracket such as “(20-00)” in the table above indicates function number and setting number.
- ●: Equipping the function.

■ Outdoor unit external output function

Dry contact/ Apply voltage			Apply voltage		Dry contact
Function	Operation status		—	●	—
	Error status		●	—	—
	Base heater		—	—	●
Specifications	Terminal		CN136 (Pin1-2)	CN137 (Pin1-2)	CN115 (Pin1-3)
	Terminal output voltage		—		AC 240 V
	External power supply	Allowable voltage	DC 12—24 V		—
		Allowable current	30 mA or less		1 A or less

NOTES:
- When using Apply voltage, take “+” polarity for Pin 1.
- ●: Equipping the function.

EXTERNAL INPUT AND OUTPUT

3. Indoor unit

External input and output functions and related components are as follows:

External input	External output	Input select	Connector	External connect kit (Optional parts)
Control input	—	Apply voltage	CNA01	UTY-XWZXZB
		Dry contact	CNA02	UTY-XWZXZD
Forced thermostat off	—	Apply voltage	CNA03	UTY-XWZXZ7
		Dry contact	CNA04	UTY-XWZXZE
—	Operation status	—	CNB01	UTY-XWZXZC
—	Error status			
—	Indoor unit status			
—	Auxiliary heater output			

RELATED LINKS

"External input" on page 08-9
"External output" on page 08-22
"Optional parts" on page 08-25
"Function summary of indoor unit external input and output" on page 08-26

EXTERNAL INPUT AND OUTPUT

3-1. External input

- Operation/Stop, Emergency stop, or Forced stop of the indoor unit can be set by using CNA01 or CNA02 on the indoor unit PCB.
- Start/Stop mode, Emergency stop mode, or Forced stop mode can be selected with function setting of the indoor unit.
- Forced thermostat off of the indoor unit can be set by using CNA03 or CNA04 on the indoor unit PCB.
- A twisted pair cable 0.33 mm^2 (22 AWG) should be used. Maximum length of cable is 150 m.
- Use an external input and output cable with appropriate external dimension, depending on the number of cables to be installed.
- When connecting the external input wire, do not route the wire closely to the power cable line.

■ Input select

Use either one of Apply voltage terminal of Dry contact terminal according to the application. (Both types of terminals cannot be used simultaneously.)

- **CNA01, CNA03: Apply voltage terminal**
  When a power supply must be provided at the input device you want to connect, use the Apply voltage terminal (CNA01, CNA03).

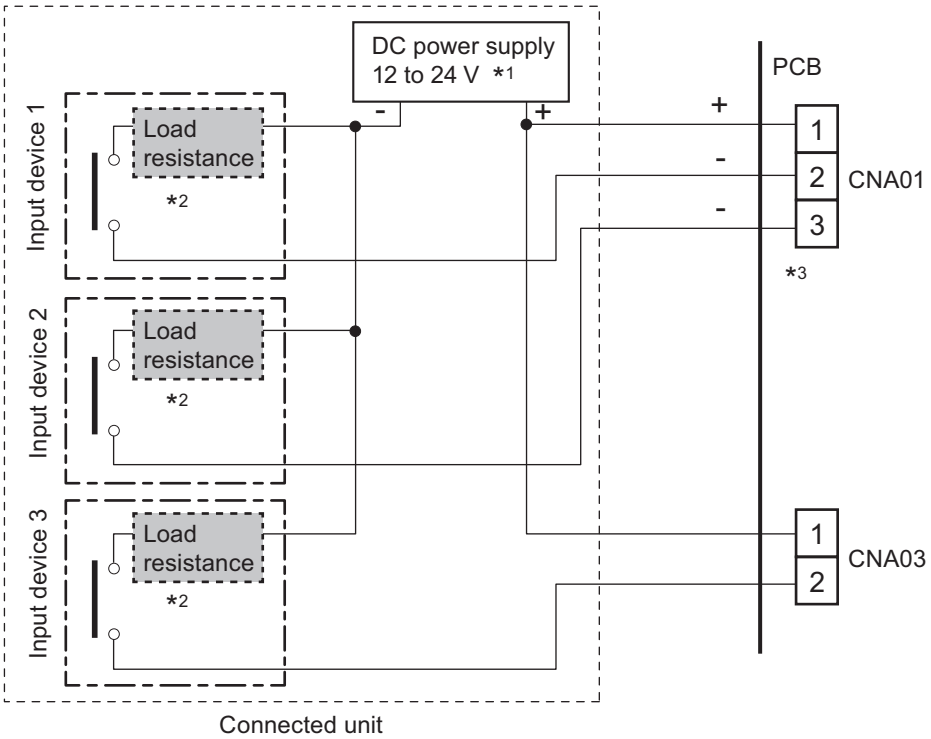

*1: Make the power supply DC12 to 24 V. Select a power supply capacity with an ample surplus for the connected load. Do not impress a voltage exceeding 24 V across pins 1-2, and 1-3.

*2: The allowable current is DC 5 mA to 10 mA. (Recommended: DC 5 mA)
Select very low current use contacts (usable at DC 12 V, DC 1 mA or less).

*3: The polarity is “+” for pin 1, and “-” for pin 2 and 3. Connect correctly.

EXTERNAL INPUT AND OUTPUT

When connecting to Apply voltage terminals of multiple indoor units, be sure to make a branch outside the indoor unit using a pull box, etc. as shown in example below.

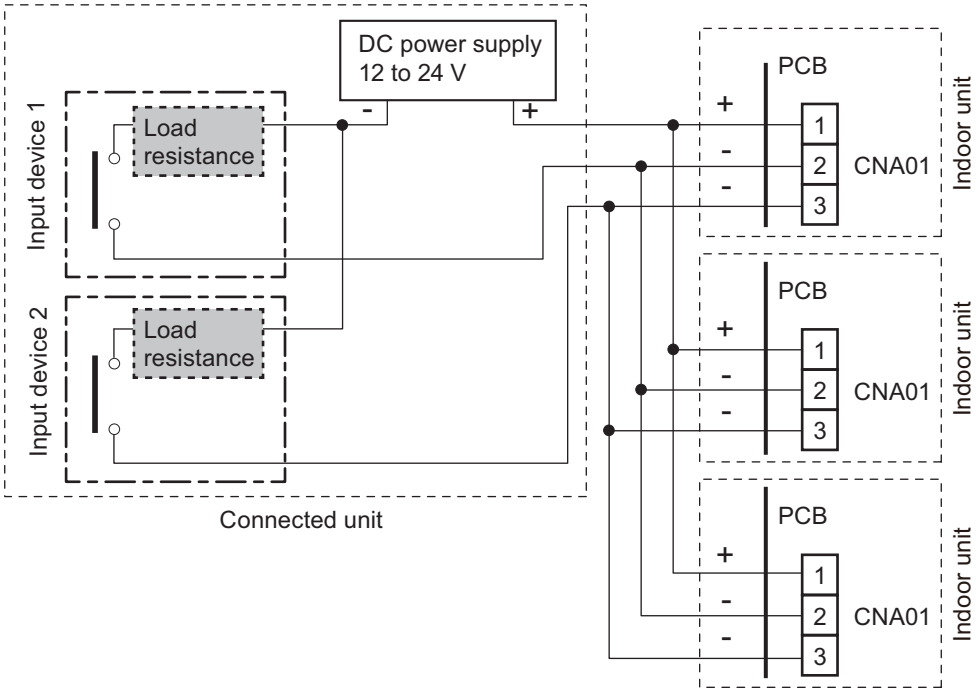

- **CNA02, CNA04: Dry contact terminal**
  When a power supply is unnecessary at the input device you want to connect, use the Dry contact terminal (CNA02, CNA04).

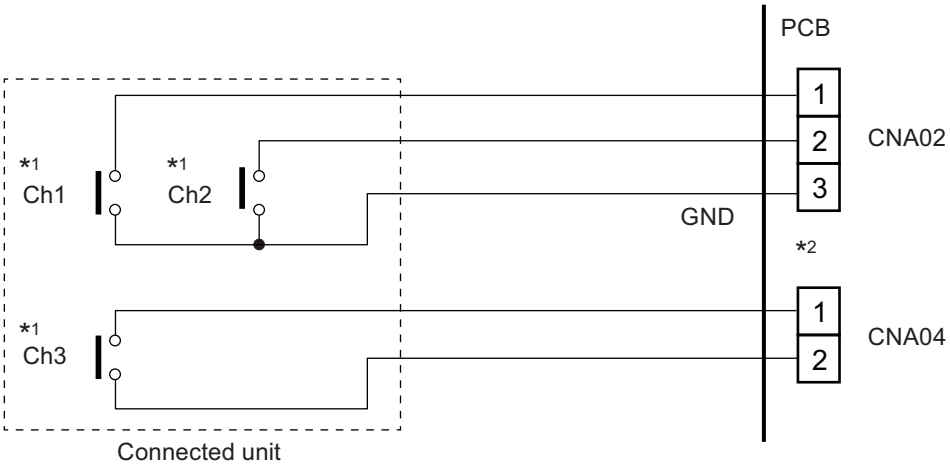

*1: Select very low current use contacts (usable at DC 12 V, DC 1 mA or less).

*2: The wiring is different from Apply voltage terminals. Be sufficiently careful when wiring.

EXTERNAL INPUT AND OUTPUT

When connecting to Dry contact terminals of multiple indoor units, insulate each indoor unit with relay, etc. as shown in example below.

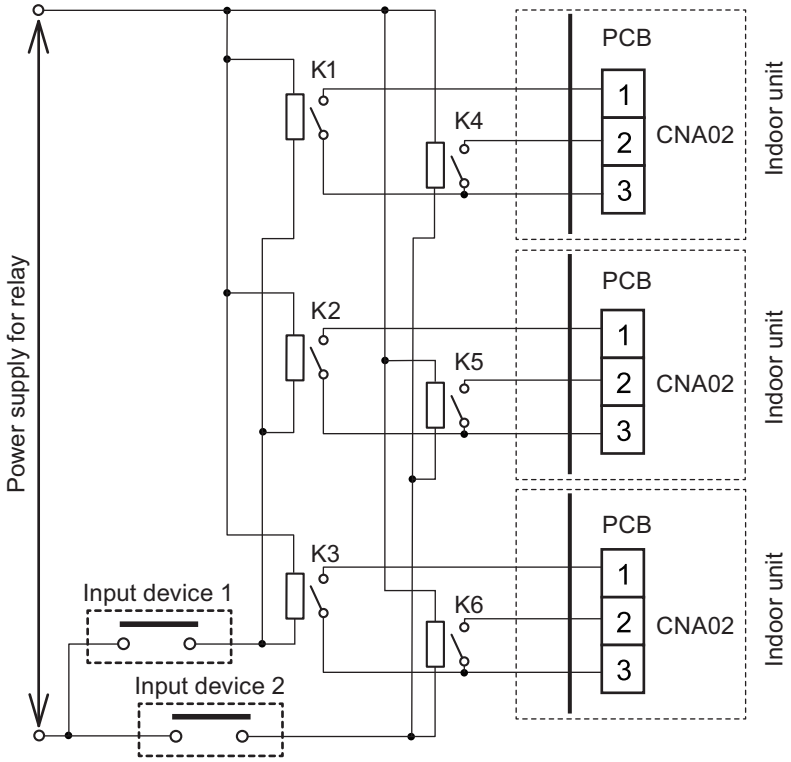

K1 to K6: Relay
(Device for DC current)

⚠ CAUTION

Do not connect to multiple indoor units directly since it will cause breakdown.

■ Input signal type

The input signal type can be selected by switching the DIP switch on the indoor unit PCB.

- **DIP switch SET2-2: Edge or Pulse selection of external input**

SET2-2	External input select	Factory setting
Off	Edge	♦
On	Pulse	

NOTE: Input signal type of Ch3 (Forced thermostat off) is only Edge.

EXTERNAL INPUT AND OUTPUT

■ Control input function

NOTES:

- The latest command has priority.
- The indoor units within the same remote controller group are operated in the same mode.

- **When function setting is Operation/Stop mode**
  - In case of Edge input:

Connector	Channel no.	Input signal	Command
CNA01 or CNA02	Ch1	Off → On	Operation
		On → Off	Stop

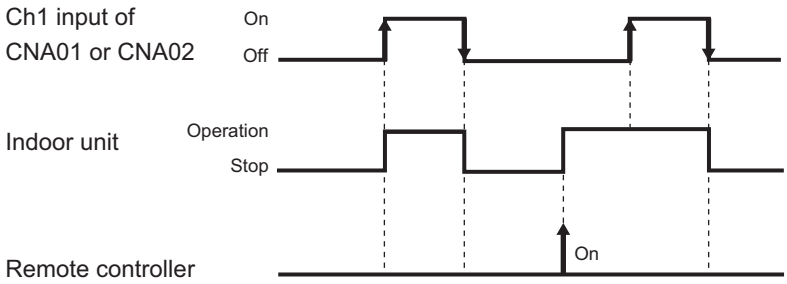

  - In case of Pulse input:

Connector	Channel no.	Input signal	Command
CNA01 or CNA02	Ch1	Off → On	Operation
	Ch2	Off → On	Stop

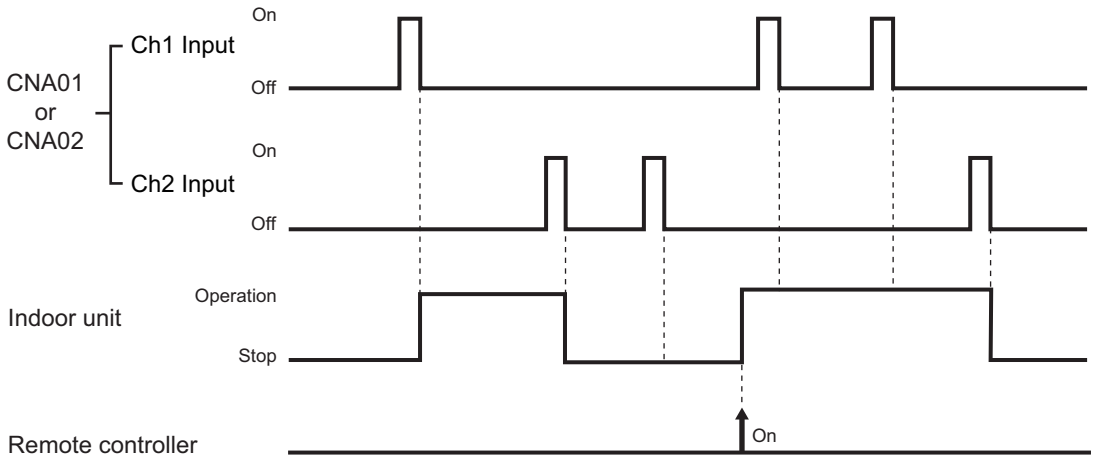

EXTERNAL INPUT AND OUTPUT

- **When function setting is Emergency stop mode**

NOTE: All the indoor units in the same refrigerant system stop when Emergency stop is operated.

– In case of Edge input:

Connector	Channel no.	Input signal	Command
CNA01 or CNA02	Ch1	Off → On	Emergency stop
		On → Off	Normal

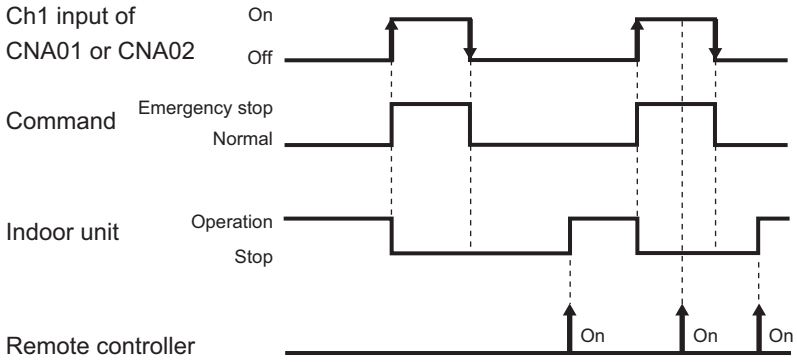

– In case of Pulse input:

Connector	Channel no.	Input signal	Command
CNA01 or CNA02	Ch1	Off → On	Emergency stop
	Ch2	Off → On	Normal

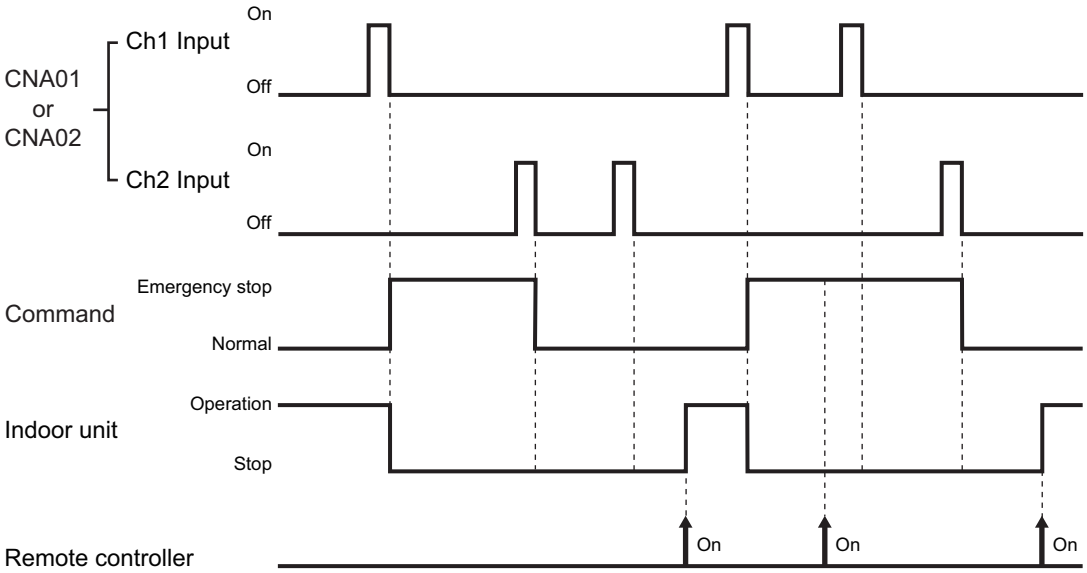

EXTERNAL INPUT AND OUTPUT

- **When function setting is Forced stop mode**

NOTE: If it enters the Forced stop mode once, the indoor unit stops and Operation/Stop operation by a remote controller will be restricted.

– In case of Edge input:

Connector	Channel no.	Input signal	Command
CNA01 or CNA02	Ch1	Off → On	Forced stop
		On → Off	Normal

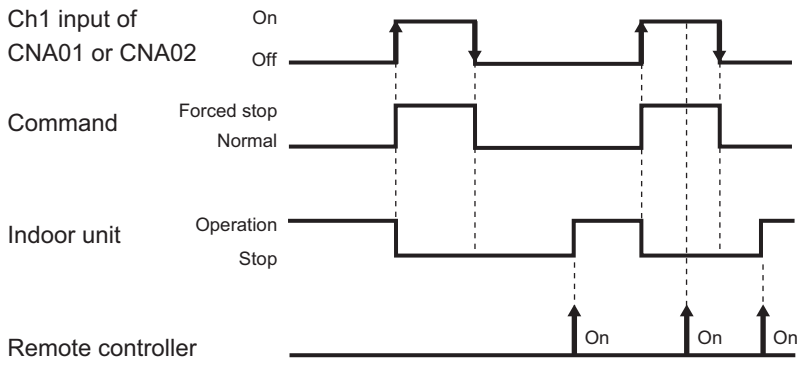

– In case of Pulse input:

Connector	Channel no.	Input signal	Command
CNA01 or CNA02	Ch1	Off → On	Forced stop
	Ch2	Off → On	Normal

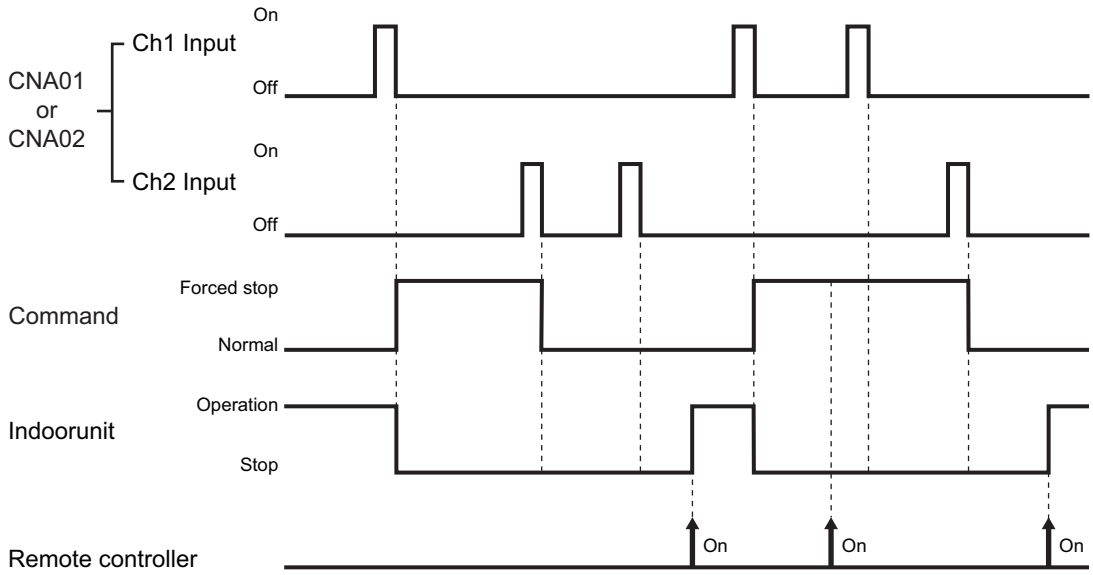

EXTERNAL INPUT AND OUTPUT

- **Considerations when setting Forced stop**

⚠ CAUTION

When Forced stop function is used with forming a remote controller group, connect the same equipment to each indoor unit within the group.

Connection example:

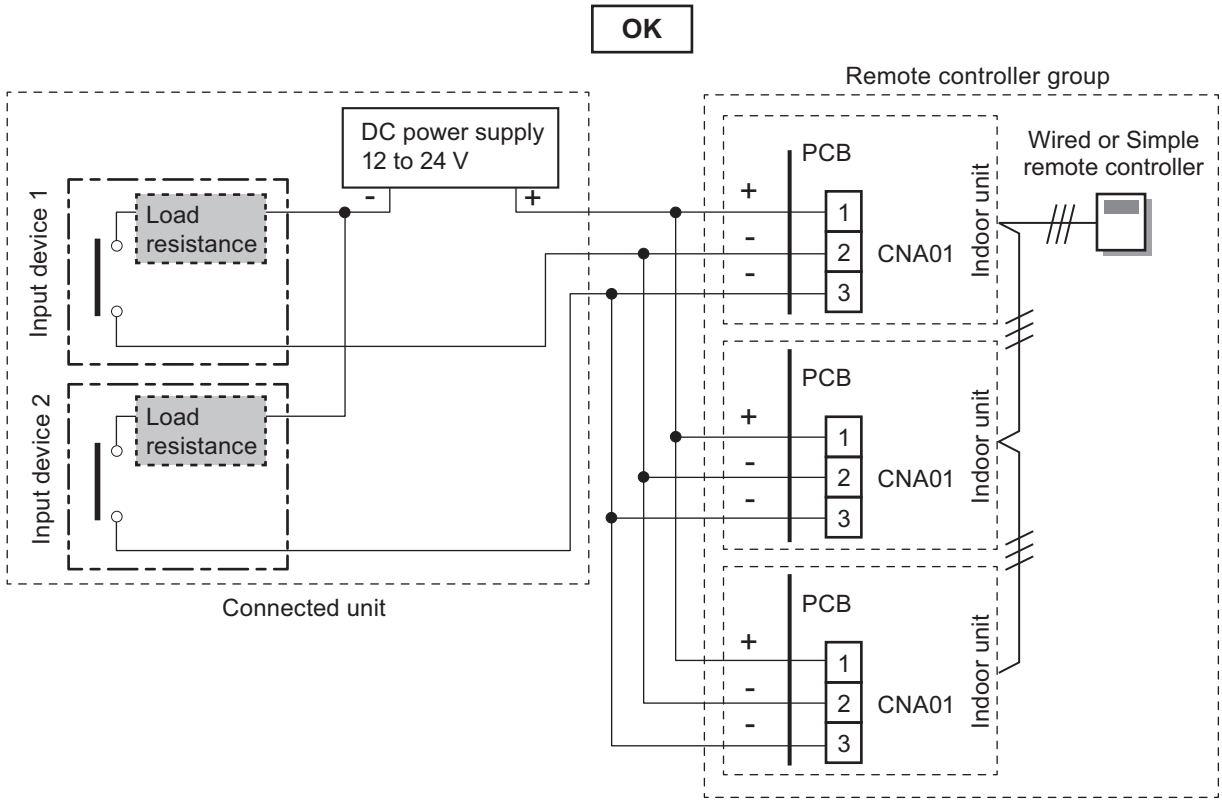

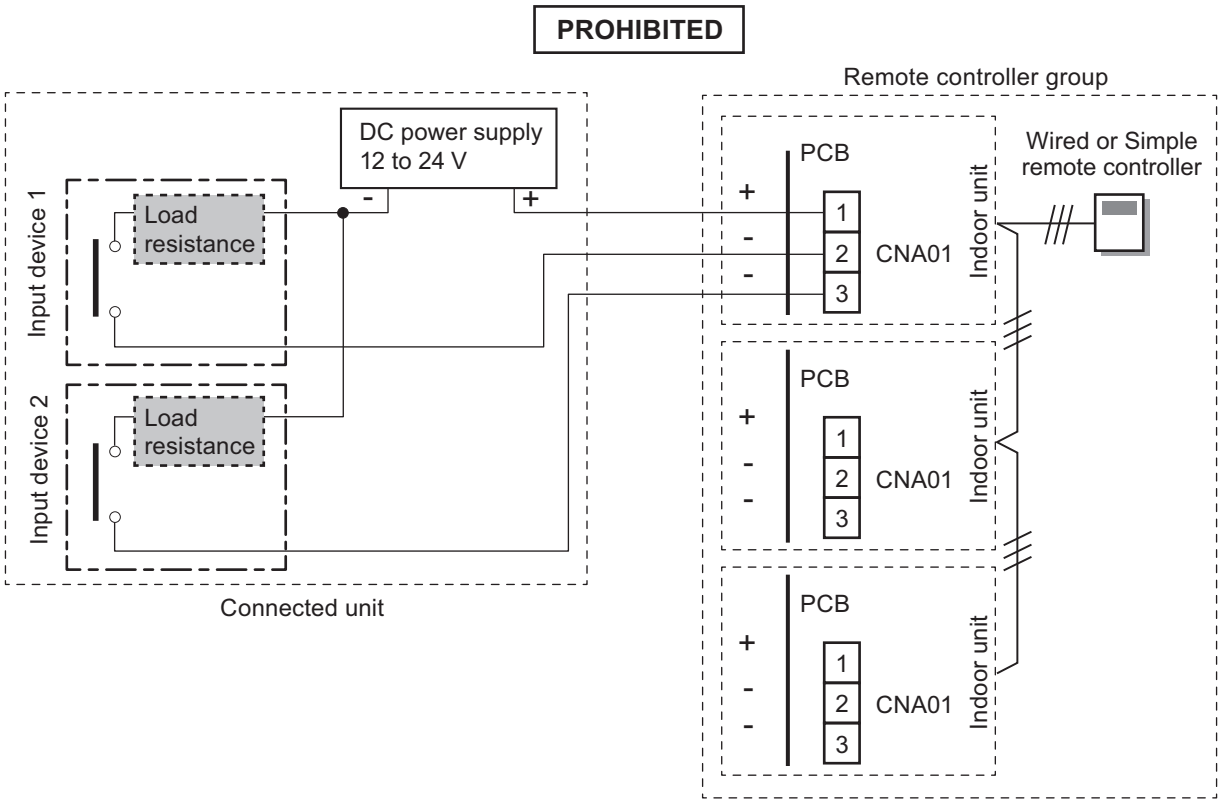

EXTERNAL INPUT AND OUTPUT

■ Forced thermostat off function

NOTE: Indoor unit may not perform Thermostat off promptly even if it received the signal by operating conditions of other indoor unit in the same refrigerant system.

- Edge input only

Function setting	Connector	Channel no.	Input signal	Command
60-00	CNA03 or CNA04	Ch3	Off → On	Thermostat off
			On → Off	Normal

Example of cooling mode:

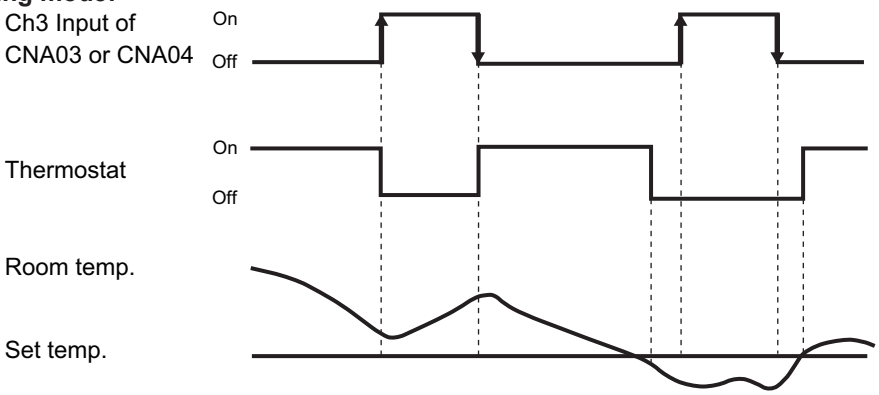

● Forced thermostat off examples

- **Example 1:**
  - **In-line connection**
  - **Function setting for Fan setting when cooling thermostat off Number 49-00 (Follow the setting on the remote controller)**

Forced thermostat off is one of the energy-saving functions. For example, when the outdoor temperature is lower than the indoor temperature, indoor unit of air conditioner perform Fan operation based on the received signal from external controller. (Cooling only)

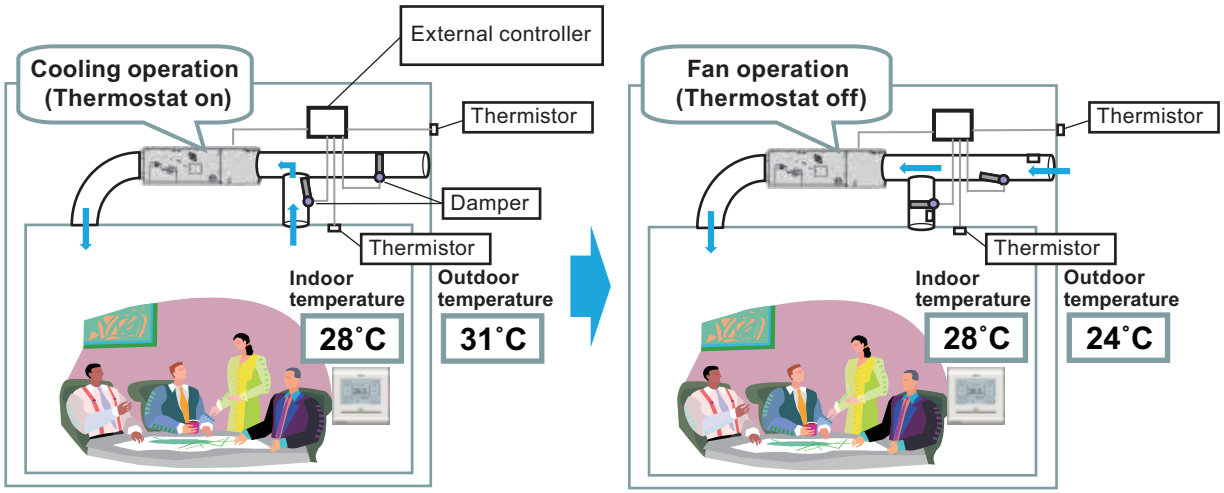

EXTERNAL INPUT AND OUTPUT

[System diagram example]

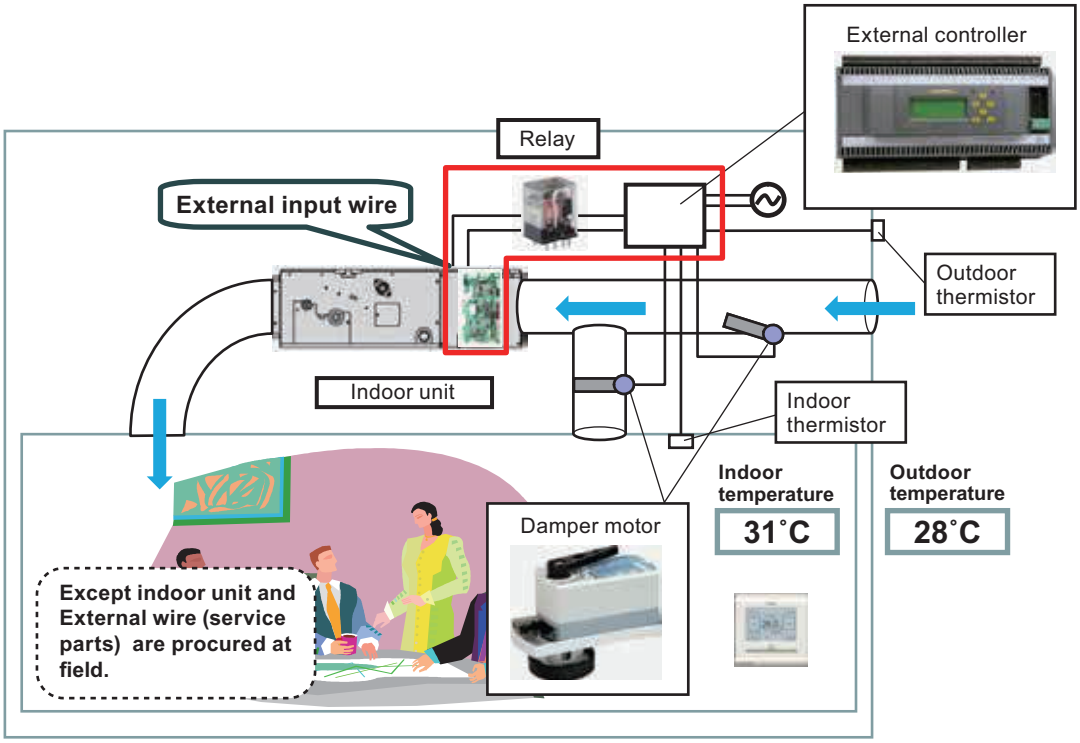

[Operation status]

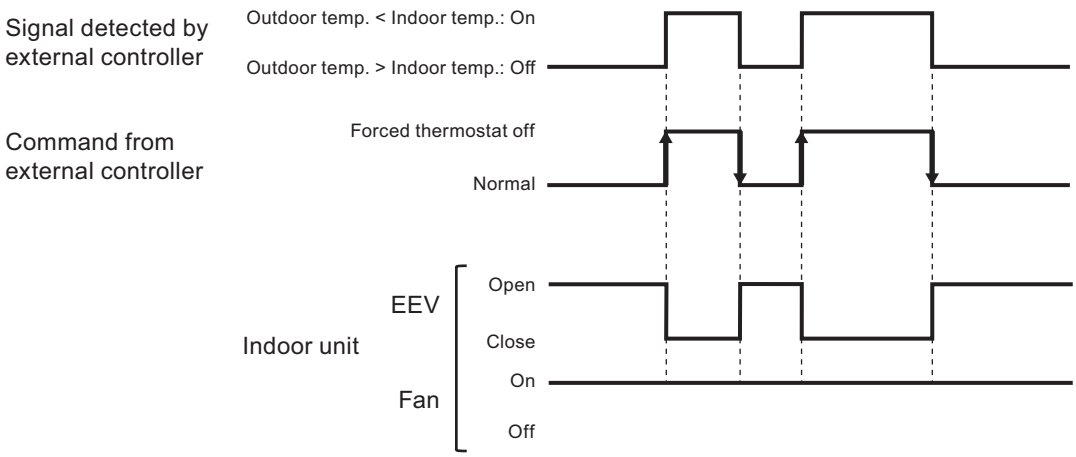

Normal means that the indoor unit continues appropriate operation until Forced thermostat off signal is received, at condition which are set by central and individual controller or detected by thermo sensors of the indoor unit.

EXTERNAL INPUT AND OUTPUT

[Function setting of indoor unit]

Indoor unit continues appropriate operation until Forced thermostat off signal is received, at condition which are set by central and individual controller or detected by thermo sensors of the indoor unit. Once the Forced thermostat off signal is received, the indoor unit start operation under fan mode.

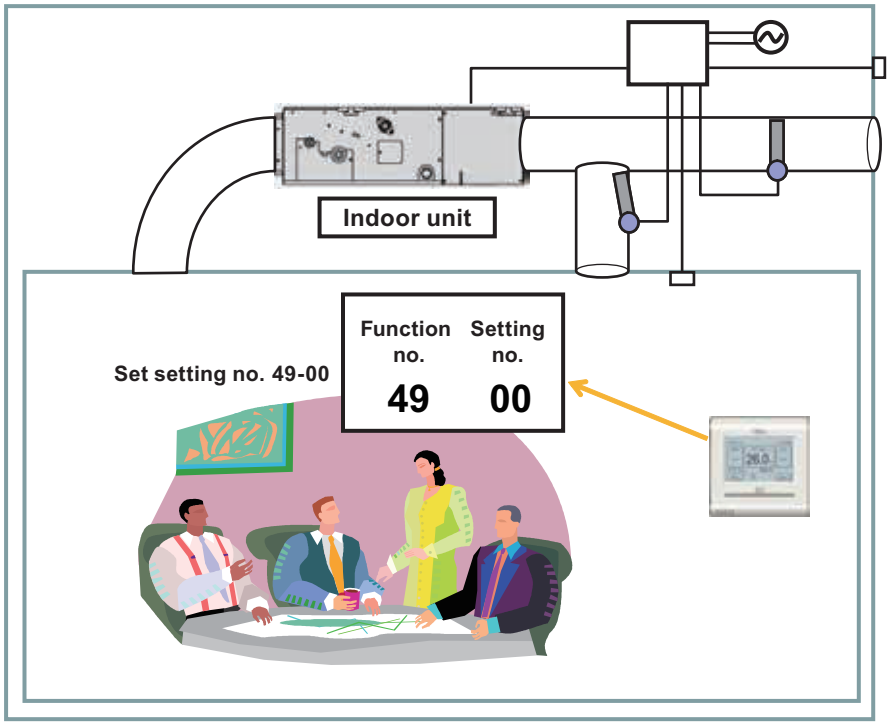

[Example of electrical circuit]

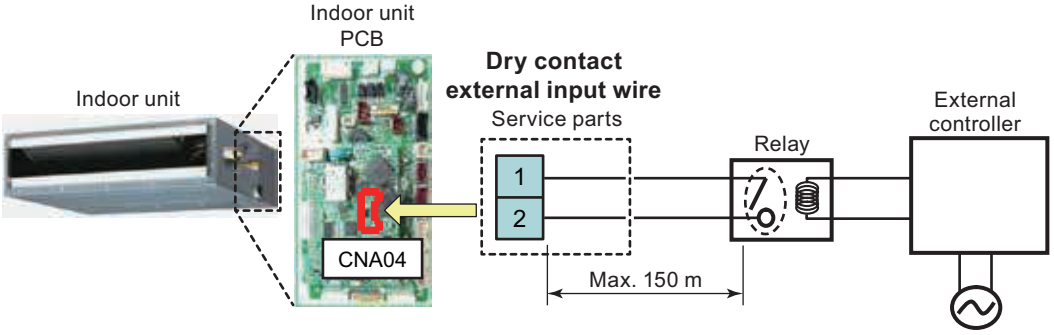

	Item	Specification
Specification of external input	Terminal	CNA04
	Output voltage	DC 12 V
	Wire diameter	0.33 mm^2 (22 AWG), Twisted
	Service part no.	9368778019

	Item	Specification
Requirement for relay switch	Minimum permissible load	1 mA or less

EXTERNAL INPUT AND OUTPUT

- **Example 2:**
  - **Individual connection**
  - **Function setting for Fan setting when cooling thermostat off Number 49-01 (Stop)**

Forced thermostat off is one of the energy-saving functions. For example, when using ventilator at condition of the outdoor temperature is lower than the indoor temperature, indoor unit of air conditioner stops based on the received signal from external controller. (Cooling only)

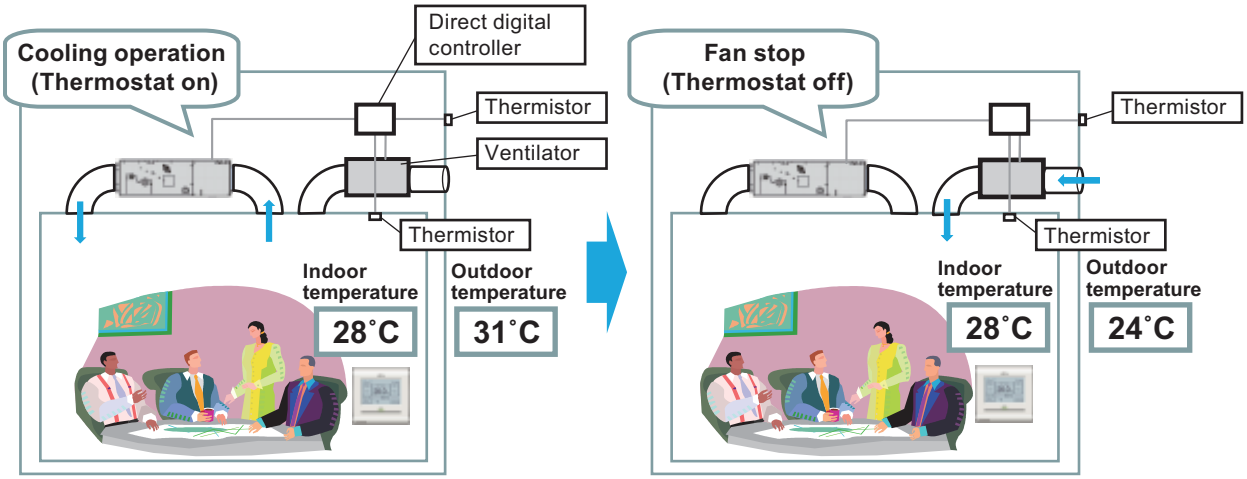

[System diagram example]

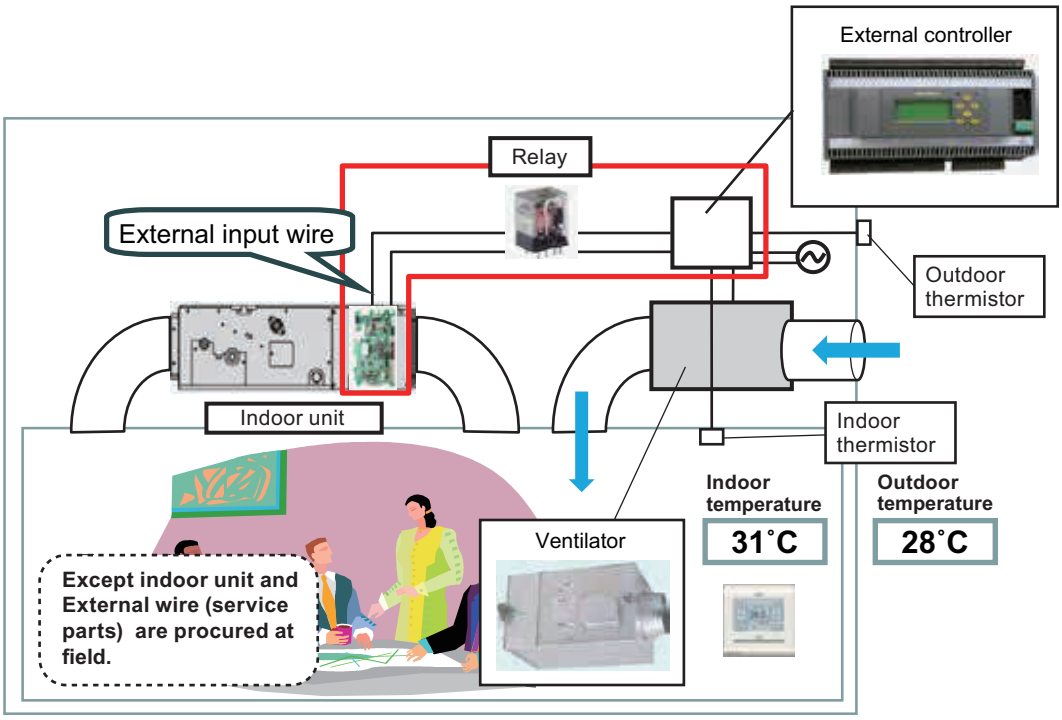

EXTERNAL INPUT AND OUTPUT

[Operation status]

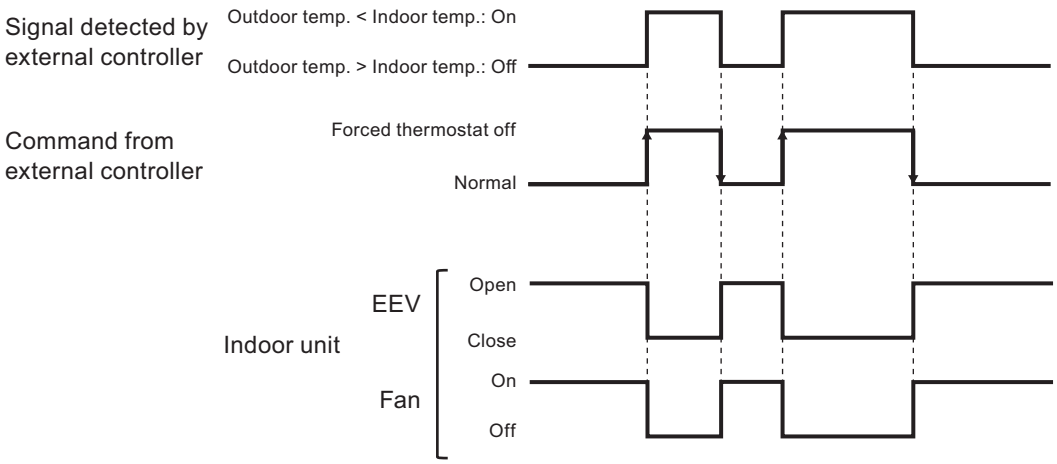

Normal means that the indoor unit continues appropriate operation until Forced thermostat off signal is received, at condition which are set by central and individual controller or detected by thermo sensors of the indoor unit.

[Function setting of indoor unit]

Indoor unit continues appropriate operation until Forced thermostat off signal is received, at condition which are set by central and individual controller or detected by thermo sensors of the indoor unit. Once the Forced thermostat off signal is received, the indoor unit stops operation.

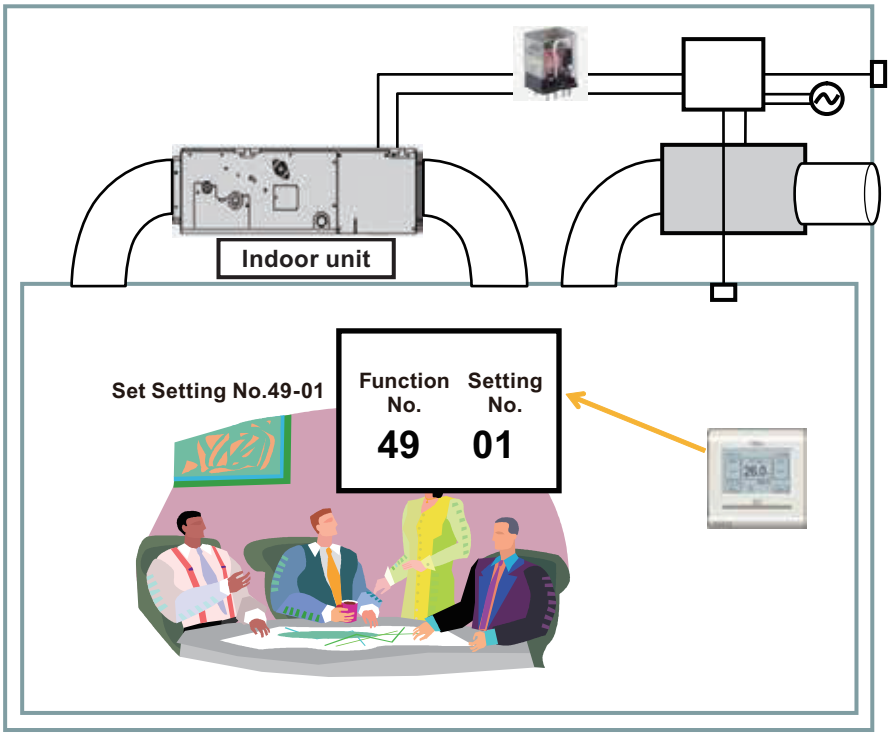

EXTERNAL INPUT AND OUTPUT

[Example of electrical circuit]

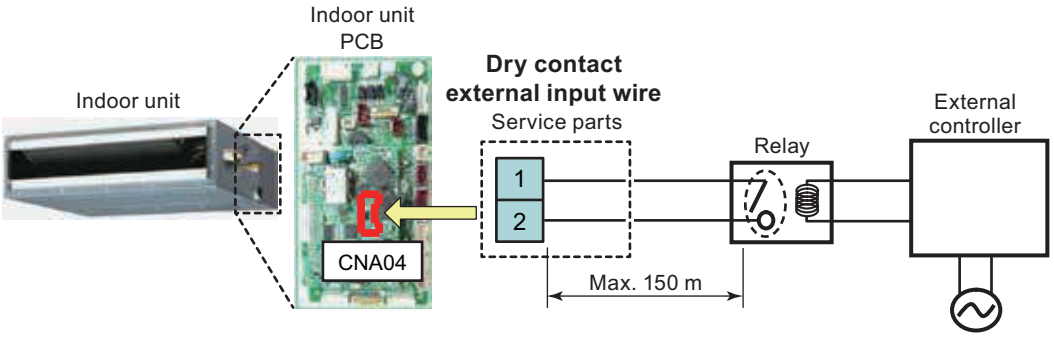

	Item	Specification
Specification of external input	Terminal	CNA04
	Output voltage	DC 12 V
	Wire diameter	0.33 mm^2 (22 AWG), Twisted
	Service part no.	9368778019

	Item	Specification
Requirement for relay switch	Minimum permissible load	1 mA or less

EXTERNAL INPUT AND OUTPUT

3-2. External output

- A twisted pair cable 0.33 mm^2 (22 AWG) should be used. Maximum length of cable is 25 m.
- Use an external input and output cable with appropriate external dimension, depending on the number of cables to be installed.
- Output voltage: DC 12 V at HIGH, 0 V at LOW
- Permissible current: 50 mA

Connector			Output voltage	Status
CNB01	External output1	Pins 1-2	0 V	Stop
			DC 12 V	Operation
	External output2	Pins 1-3	0 V	Normal
			DC 12 V	Error
	External output3	Pins 1-4	0 V	Indoor unit fan stop
			DC 12 V	Indoor unit fan operation
	External output4	Pins 1-5	0 V	Auxiliary heater off
			DC 12 V	Auxiliary heater on

■ Output select

- **When indicator etc. are connected directly**

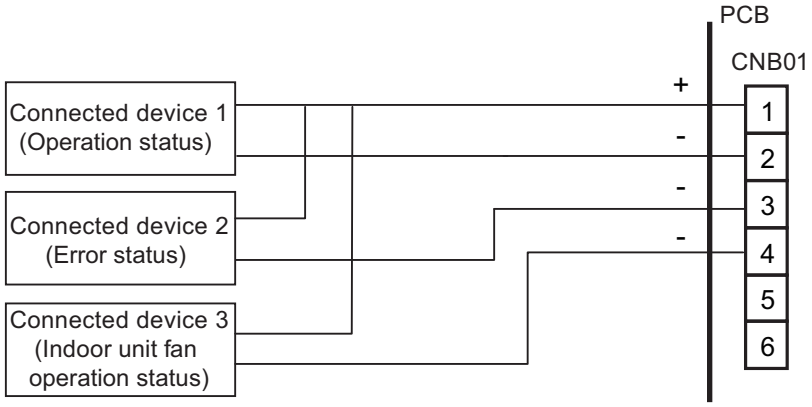

Actual number of pin might be different from the figure above.

- **When connecting to unit equipped with a power supply**

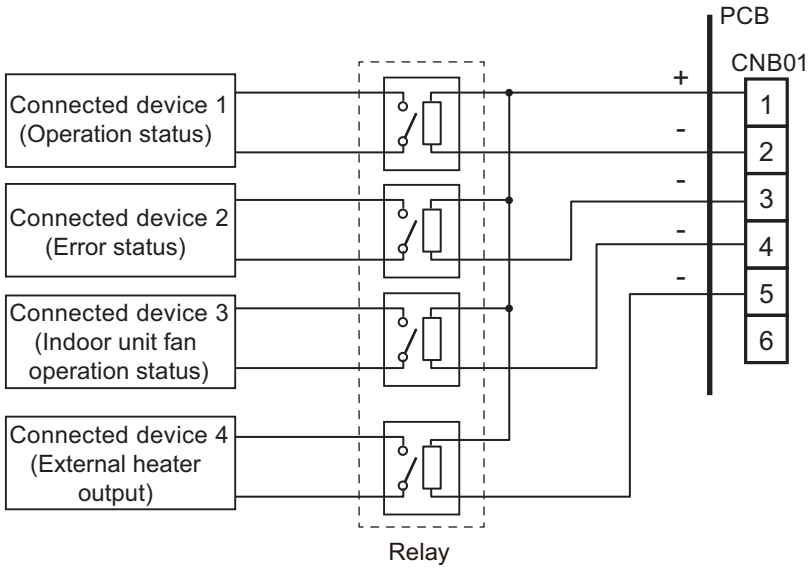

Actual number of pin might be different from the figure above.

EXTERNAL INPUT AND OUTPUT

■ Operation status (External output 1)

The output for CNB01 (1-2) is on when the indoor unit is operating.
The output is off when the unit is stopped.

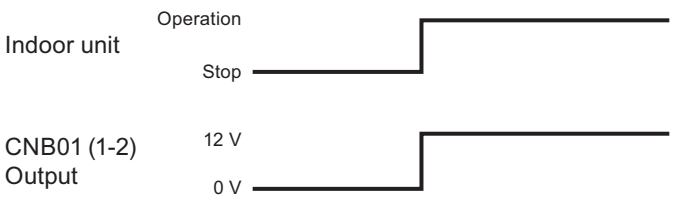

■ Error status (External output 2)

The output for CNB01 (1-3) is on when an error is generated for the indoor unit.

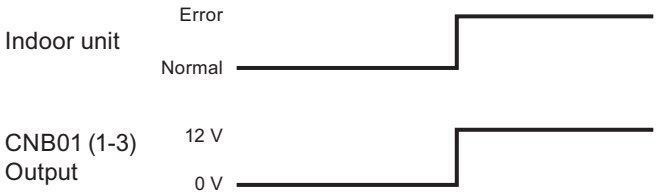

■ Indoor unit status (External output 3)

The output for CNB01 (1-4) is on when the indoor unit fan is operating.
The output is off when the fan is stopped or during cold air prevention.
The output for CNB01 (1-4) is off during thermostat off when DRY mode operation.

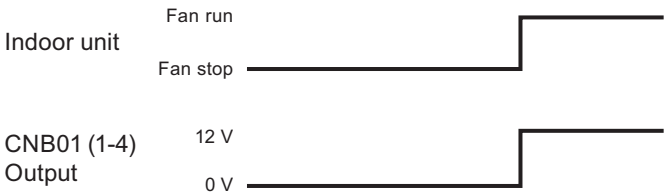

Ex.: Used for interlock energize for exhaust fan

EXTERNAL INPUT AND OUTPUT

■ Auxiliary heater output (External output 4)

When indoor unit fan and compressor is turned on in heating operation, the signal is output from connector.

NOTE: Corresponding indoor units: All duct type

Specifications of the signal output performance are as shown as follows:

Example: When set temperature (Ts) is set at 22 °C;

- And room temperature (Tr) increase above 12 °C, signal output is on.
- And Tr increase above 21 °C, signal output is off.
- And Tr decrease below 19 °C, signal output is on.
- And Tr decrease below 10 °C, signal output is off.

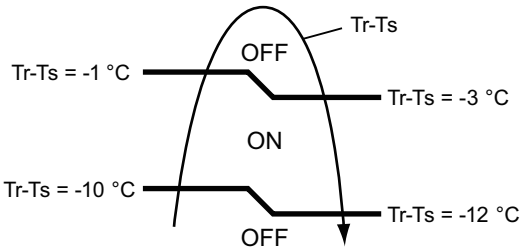

The output also turns off on defrost operation and oil recovery operation.

- **Fan delay switch (Indoor unit)**
  This is used to continue the indoor unit fan operation for 1 minute after thermo off in heating mode.
  1 minute delay control setting by DIP switch (2-3) on the PCB is “On”.

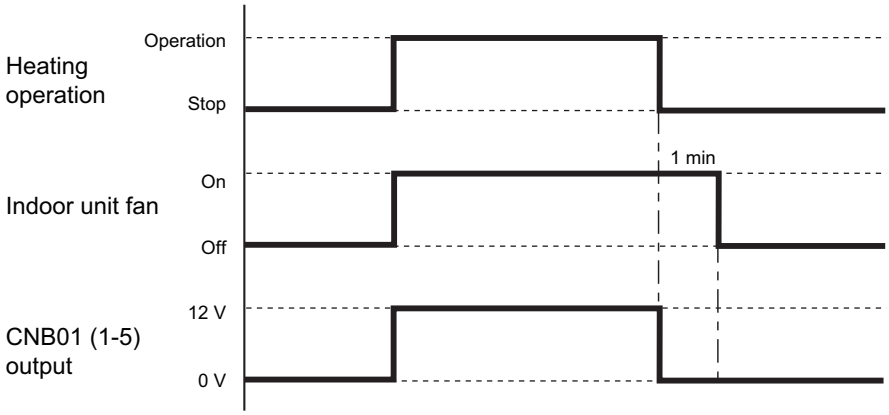

⚠ CAUTION

- Install an auxiliary heater between the indoor unit and the outlet.

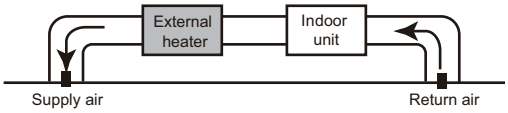

- Be sure to use delay control of the fan.
- To avoid a fire caused by self heat of the auxiliary, design and install the auxiliary properly with considering protection by auxiliary itself.
  Our company is not responsible for the system designed including auxiliary with improper installation.

EXTERNAL INPUT AND OUTPUT

3-3. Optional parts

External connect kit			
Model name	**Exterior**	**Q'ty**	**Usage**
UTY-XWZXZ7	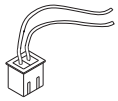	1	For forced thermostat off port. (Apply voltage terminal)
UTY-XWZXZC	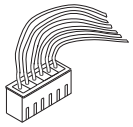	1	For output port.
UTY-XWZXZB	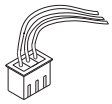	1	For control input port. (Apply voltage terminal)
UTY-XWZXZD	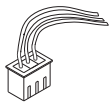	1	For control input port. (Dry contact terminal)
UTY-XWZXZE	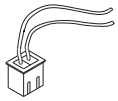	1	For forced thermostat off port. (Dry contact terminal)

EXTERNAL INPUT AND OUTPUT

3-4. Function summary of indoor unit external input and output

■ Indoor unit external input function

Dry contact/ Apply voltage			Dry contact DC 12 V			Apply voltage		
Function	Operation/Stop		● (46-00)		—	● (46-00)		—
	Emergency stop		● (46-01)		—	● (46-01)		—
	Forced stop		● (46-02)		—	● (46-02)		—
	Forced thermostat off		—		● (60-00)	—		● (60-00)
Specifications	Terminal		CNA02 (Pin1-3)	CNA02 (Ch1: Pin1-3) (Ch2: Pin2-3)	CNA04 (Pin1-2)	CNA01 (Pin1-2)	CNA01 (Ch1: Pin1-2) (Ch2: Pin1-3)	CNA03 (Pin1-2)
	Signal type		Edge	Pulse *	Edge	Edge	Pulse *	Edge
	External power supply	Allowable voltage	—			DC 12 to 24 V		
		Allowable current	—			10 mA or less		
	Wire size		0.33 mm^2 (22 AWG), Twisted					
	Max. cable length		150 m					

*: Default setting is Edge signal. If you use Pulse signal, DIP switch 2-2 must be set to “On”.

■ Indoor unit external output function

Dry contact/ Apply voltage		Dry contact			
Function	Operation status	●	—	—	—
	Error status	—	●	—	—
	Indoor unit fan operation status	—	—	●	—
	Auxiliary heater output	—	—	—	● *
Specifications	Terminal	CNB01 (Pin1-2)	CNB01 (Pin1-3)	CNB01 (Pin1-4)	CNB01 (Pin1-5)
	Terminal output voltage	DC 12 V			
	Wire size	0.33 mm^2 (22 AWG), Twisted			
	Max. cable length	25 m			

*: Auxiliary heater is only available for duct type indoor unit. If you use Auxiliary heater output, DIP switch 2-3 must be set to “On”.

EXTERNAL INPUT AND OUTPUT

4. Controller

RELATED LINKS

"Touch panel controller" on page 08-27
"Central remote controller (UTY-DCG∗Z∗)" on page 08-32
"Function summary of controller external input/output" on page 08-38

4-1. Touch panel controller

External input and output functions and related components are as follows:

External input	External output	Connector	External connect kit (Optional parts)
Control input	—	TM201 (CN411 or CN412)	—
Electricity meter	—		—
—	Operation status	CN410	UTY-XWZXZA
—	Error status		

RELATED LINKS

"External input" on page 08-27
"External output" on page 08-31
"Optional parts" on page 08-31
"Function summary of controller external input/output" on page 08-38

■ External input

This function performs “Emergency stop” or “All On / All Off” by using the signal to be input externally at external input terminals.

● Input select

Use either one of Apply voltage terminal of Dry contact terminal according to the application. (Both types of terminals cannot be used simultaneously.) For more details, refer to the operation manual of Touch panel controller.

It is possible to switch to the Dry contact terminal or the Apply voltage terminal by connecting CN201 of TM201 on the PCB to CN411 or CN412 on the PCB of the panel side.

* The Dry contact terminal (connected to the CN411) is set at the time of factory shipment.

TM201 - K1, K2	Connect with the CN201
Dry contact terminal	CN411
Apply voltage terminal	CN412

EXTERNAL INPUT AND OUTPUT

- **TM201 (CN411): Dry contact terminal**
  When a power supply is unnecessary at the input device you want to connect, use the Dry contact terminal TM201 (CN411).

Connection example 1: When the switch is connected

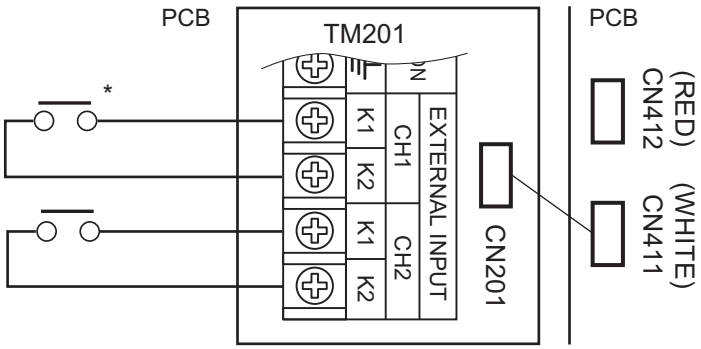

*: Short circuit detection resistance (R_{ON}): ≤ 500 Ω
Open circuit detection resistance (R_{OFF}): ≥ 100 kΩ
A twisted pair cable 0.33 mm^2 (22 AWG) should be used. (Maximum cable length: 25 m)

Connection example 2: When the electricity meter is connected

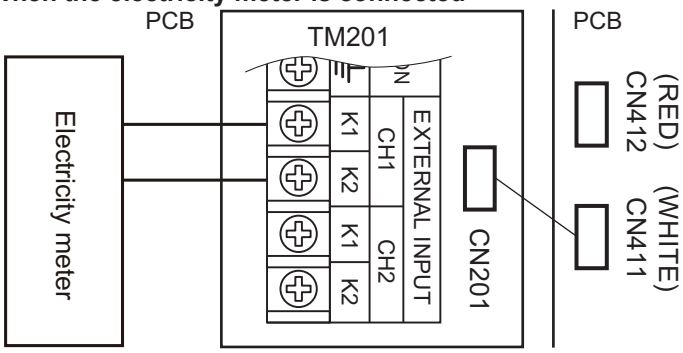

Connect the electricity meter to CH1. In this case, the use of CH2 is prohibited.

EXTERNAL INPUT AND OUTPUT

- **TM201 (CN412): Apply voltage terminal**
  When a power supply must be provided at the input device you want to connect, use the Apply voltage terminal TM201 (CN412).

Connection example 1: When the switch is connected

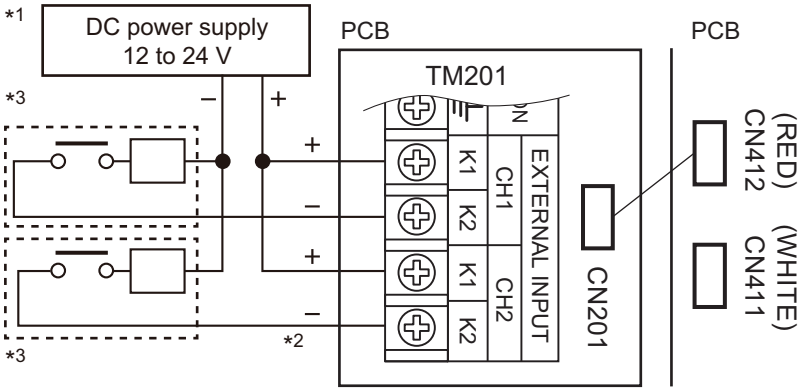

Connection example 2: When the electricity meter is connected

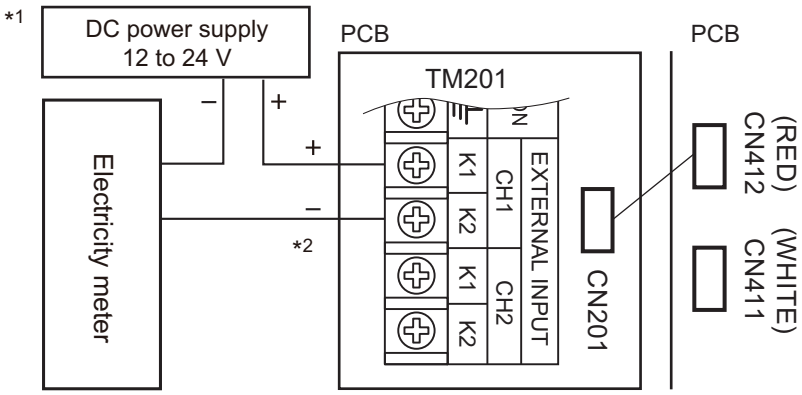

*1: Make the power supply DC12 to 24 V. Select a power supply capacity with an ample surplus for the connected load.

*2: Do not impress a voltage exceeding 24 V across K1-K2.

*3: The allowable current is DC 10 mA or less. (Recommended: DC 5 mA)
Provide a load resistance such that the current becomes DC10 mA or less.
Select very low current use contacts (usable at DC 12 V, DC 1 mA or less).
A twisted pair cable 0.33 mm^2 (22 AWG) should be used. (Maximum cable length: 25 m)

● Selecting the function

The function of the external input terminals is disabled at the time of factory shipment. Select the function to be used by installer setting of application.

Turn on the power and select by installer setting after starting the application.

Emergency stop	Edge/Pulse
All on/All off	
Electricity meter	Pulse

EXTERNAL INPUT AND OUTPUT

● Input signal type

The input signal type can be selected.

Edge	H L	Emergency stop or All on	Ch1
	H L	Emergency stop reset or All off	
Pulse	H L 300 ms or more	Emergency stop or All on	Ch1
		Emergency stop reset or All off	Ch2
	H L 50 ms or more	Electricity meter signal	Ch1

When Edge is selected, only Ch1 can be used.

● Control input function

- **In case of Edge input:**

Terminal	Channel no.	Input signal	Command
TM201	Ch1	Off → On	All on / Emergency stop
		On → Off	All off / Normal

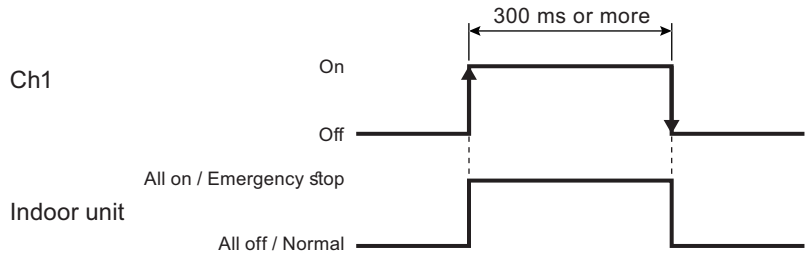

- **In case of Pulse input:**

Terminal	Channel no.	Input signal	Command
TM201	Ch1	Pulse	All on / Emergency stop
	Ch2		All off / Normal

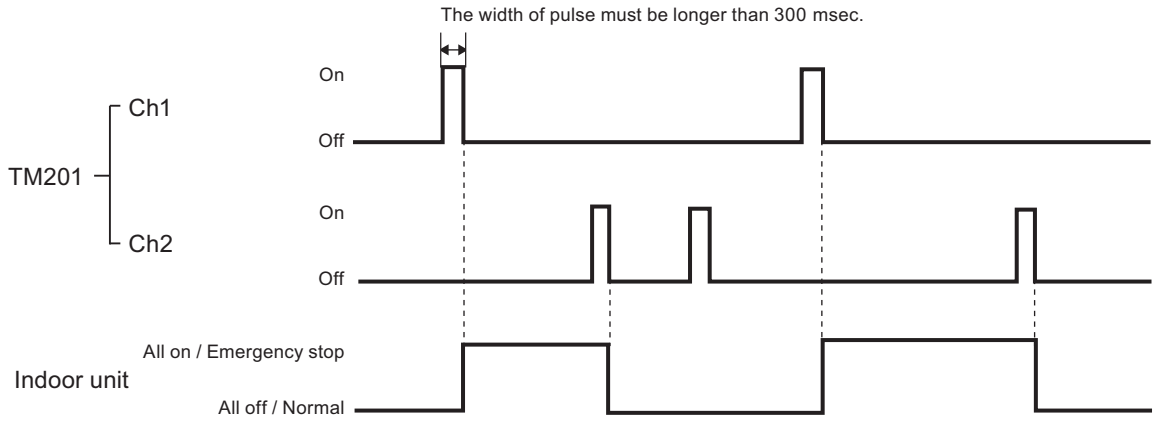

EXTERNAL INPUT AND OUTPUT

■ External output

Connector		Output voltage	Status
CN410 (Black)	Ch1	0 V	All indoor units: Stop
	Pins 1-2	DC 12 V	One or more indoor units: Operation
	Ch2	0 V	Normal
	Pins 3-4	DC 12 V	Error

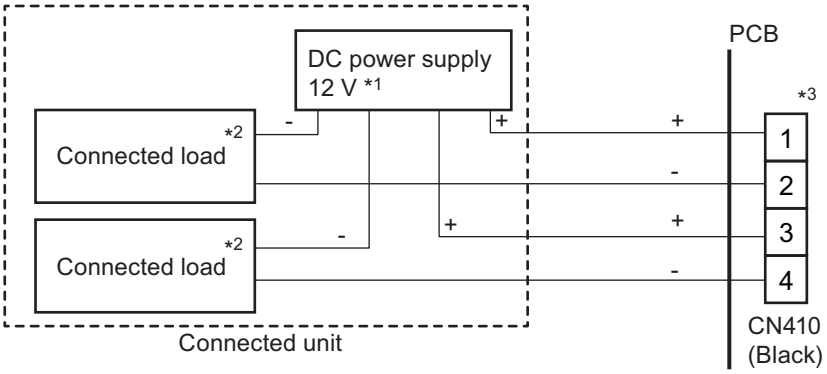

*1: Provide a DC 12 V power supply. Select a power supply capacity with an ample surplus for the connected load. Do not impress a voltage exceeding 12 V across pins 1-2 and 3-4.

*2: The allowable current is DC15 mA or less. Provide a load resistance such that the current becomes DC 15 mA or less.

*3: Polarity is “+” for pins 1 and 3, “-” for pins 2 and 4. Connect correctly.

● Operation status (External output 1)

The output for CN410 (1-2) is on when one or more indoor units are operating. The output is off when all of the indoor units are stopped.

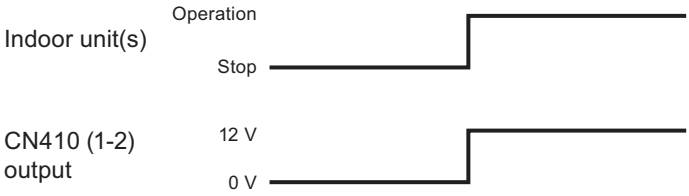

● Error status (External output 2)

The output for CN410 (3-4) is on when an error is generated at one or more indoor units, outdoor unit, or Touch panel controller.

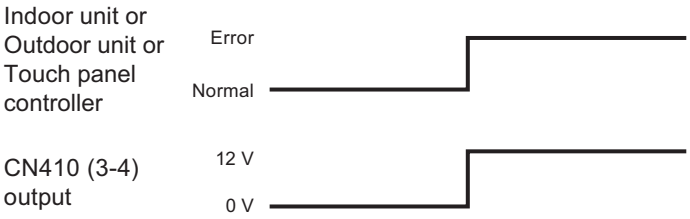

■ Optional parts

External connect kit			
Model name	Exterior	Q’ty	Usage
UTY-XWZXZA	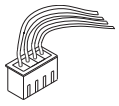	1	For output port.

EXTERNAL INPUT AND OUTPUT

4-2. Central remote controller (UTY-DCG∗Z∗)

External input and output functions and related components are as follows:

External input	External output	Input select	Connector	External connect kit (Optional parts)
Control input	—	Dry contact	CN12, CN13	UTY-XWZXZ7
		Apply voltage	CN14, CN15	UTY-XWZXZ8
—	Operation status	—	CN18	UTY-XWZXZA
	Error status			

RELATED LINKS

"External input" on page 08-32
"External output" on page 08-36
"Optional parts" on page 08-37
"Function summary of controller external input/output" on page 08-38

■ External input

This function performs “Emergency stop” or “All On / All Off” by using the signal to be input externally at external input terminals.

● Input select

Use either one of Apply voltage terminal or Dry contact terminal according to the application. (Both types of terminals cannot be used simultaneously.)

- **CN12 (CH1) and CN13 (CH2): Dry contact terminal**
  When a power supply is unnecessary at the input device you want to connect, use the Dry contact terminal CN12 (Ch1) and CN13 (Ch2).

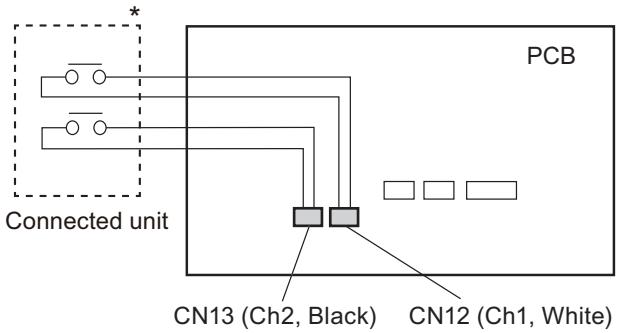

*: Short circuit detection resistance (R_{ON}): ≤ 500 Ω
Open circuit detection resistance (R_{OFF}): ≥ 100 kΩ

A twisted pair cable 0.33 mm^2 (22 AWG) should be used. (Maximum cable length: 25 m)

Input method	Terminal	Input signal	Operation
Edge	CN12 (Ch1)	Low → High	“Emergency Stop” or “All on”
		High → Low	“Emergency Stop” reset or “All Off”
Pulse	CN12 (Ch1)	Low → High	“Emergency Stop” or “All on”
	CN13 (Ch2)	Low → High	“Emergency Stop” reset or “All Off”

EXTERNAL INPUT AND OUTPUT

- **CN14 (Ch1) and CN15 (Ch2): Apply voltage terminal**
  When a power supply must be provided at the input device you want to connect, connect to CN14 (Ch1) and CN15 (Ch2).

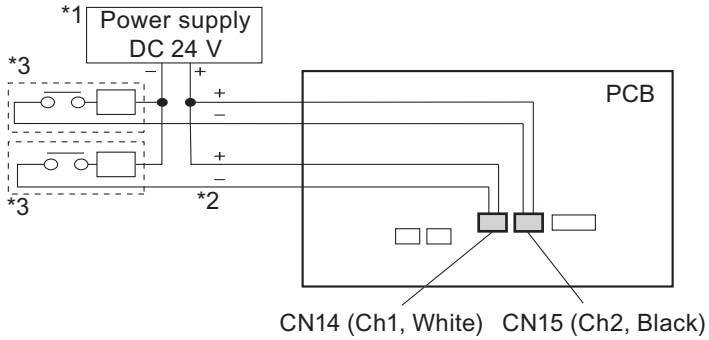

*1: Make the power supply DC 24 V. Select a power supply capacity with an ample surplus for the connected load.

*2: Do not impress a voltage exceeding 24 V across pin 1-3.

*3: The allowable current is DC 5 mA or less. (Recommended: DC 5 mA)
Provide a load resistance such that the current becomes DC 5 mA or less.

A twisted pair cable 0.33 mm^2 (22 AWG) should be used. (Maximum cable length: 25 m)

Input method	Terminal	Input signal	Operation
Edge	CN14 (Ch1)	Low → High	“Emergency Stop” or “All on”
		High → Low	“Emergency Stop” reset or “All Off”
Pulse	CN14 (Ch1)	Low → High	“Emergency Stop” or “All on”
	CN15 (Ch2)	Low → High	“Emergency Stop” reset or “All Off”

EXTERNAL INPUT AND OUTPUT

● Input signal type

The input signal type can be selected by using Central remote controller interface.

To select the input signal type, do as follows:

1. Tap Menu button.

2. Tap “Installer Setting”.

3. Tap “External Input Setting”.

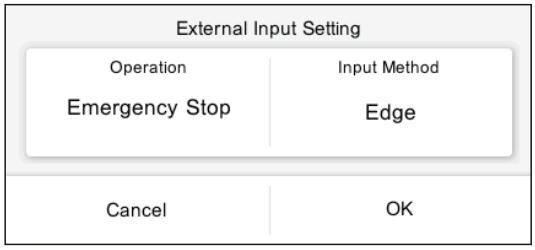

4. Tap “Operation” and select following operation for external input.

- Emergency Stop: Enables Emergency stop by external input
- All On/Off: Enables batch operation on or off by external input
- Not Used: Does not receive external input signals

5. Tap “Input method” and select following input method.

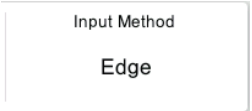

- Edge button: Detects the signal rise and fall
- Pulse button: Detects the signal level

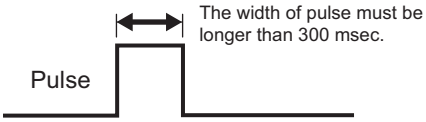

6. When “OK” button is tapped, setting is complete.

EXTERNAL INPUT AND OUTPUT

● Control input function

- **In case of Edge input:**

Connector	Input signal	Command
CN12 (Ch1) or CH14 (Ch1)	Off → On	All on / Emergency stop
	On → Off	All off / Normal

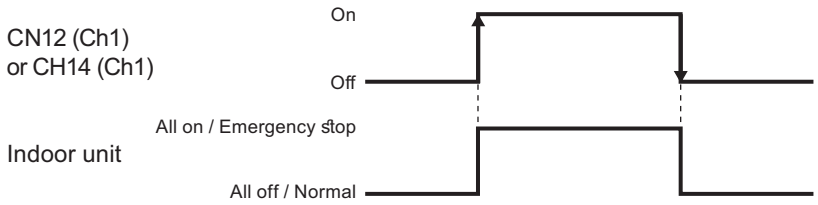

- **In case of Pulse input:**

Connector	Input signal	Command
CN12 (Ch1) or CN14 (Ch1)	Off → On	All on / Emergency stop
CN13 (Ch2) or CN15 (Ch2)	Off → On	All off / Normal

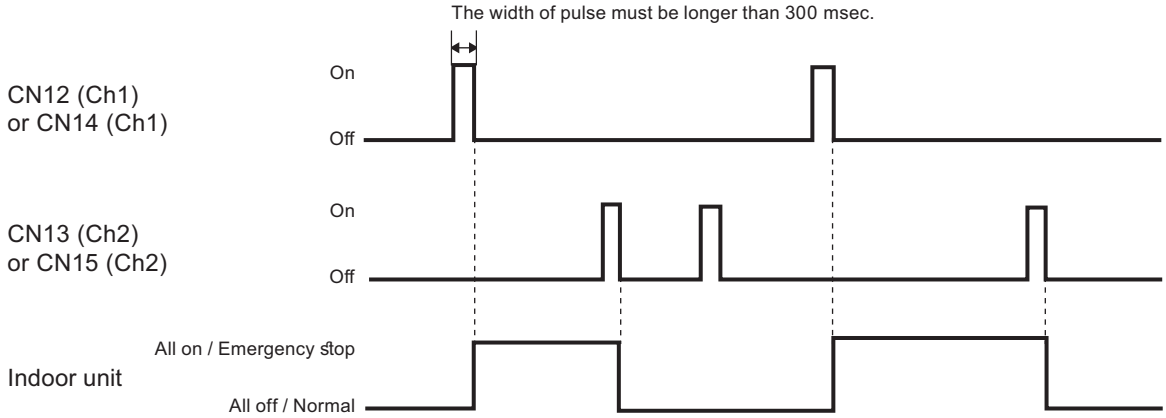

EXTERNAL INPUT AND OUTPUT

■ External output

Terminal	Ch	Pin	Output voltage	Status
CN18	Ch1	4	DC 12 V	One or more indoor units: Operation
		3	0 V	All indoor units: Stop
	Ch2	2	DC 12 V	Error
		1	0 V	Normal

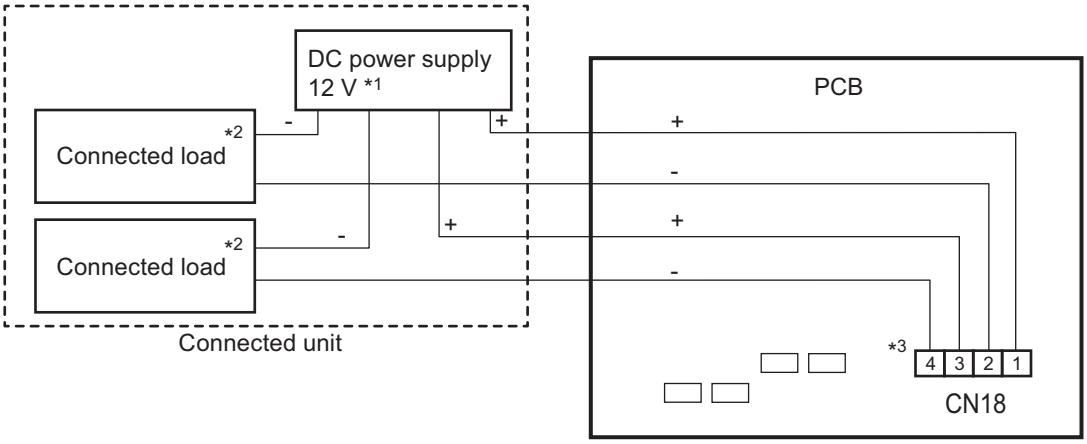

*1: Provide a DC 12 V power supply. Select a power supply capacity with an ample surplus for the connected load. Do not impress a voltage exceeding 12 V across pins 1-2 and 3-4.

*2: The allowable current is DC15 mA or less. Provide a load resistance such that the current becomes DC 15 mA or less.

*3: Polarity is “+” for pins 1 and 3, “-” for pins 2 and 4. Connect correctly.

● Operation status (External output 1)

The output for CN18 (3-4) is on when one or more indoor units are operating.
The output is off when all of the indoor units are stopped.

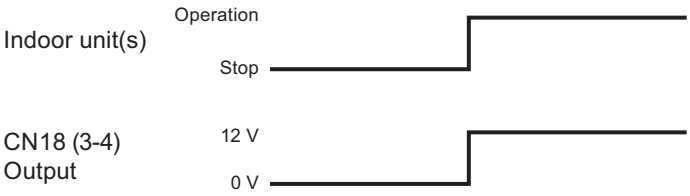

● Error status (External output 2)

The output for CN18 (1-2) is on when an error is generated at one or more indoor units, outdoor unit or Central remote controller.

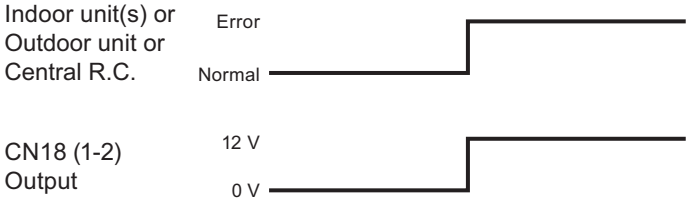

EXTERNAL INPUT AND OUTPUT

■ Optional parts

External connect kit				
Model name	**Exterior**	**Q'ty**		**Usage**
		Edge	Pulse	
UTY-XWZXZ7	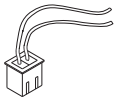	2	1	For control input port. (Dry contact terminal)
		Edge	Pulse	
UTY-XWZXZ8	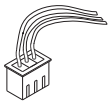	2	1	For control input port. (Apply voltage terminal)
UTY-XWZXZA	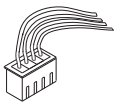	1		For output port.

EXTERNAL INPUT AND OUTPUT

4-3. Function summary of controller external input/output

■ Controller external input function

Touch panel controller (UTY-DTG∗Z1)

Dry/Apply-voltage contact			Dry contact		Apply voltage	
Function	Emergency stop		● (Screen icon)		● (Screen icon)	
	All on/All off		● (Screen icon)		● (Screen icon)	
Specifications	Terminal		TM201 (Ch1-K1, K2) CN201 ↕ CN411	TM201 (Ch1-K1, K2) (Ch2-K1, K2) CN201 ↕ CN411	TM201 (Ch1-K1, K2) CN201 ↕ CN412	TM201 (Ch1-K1, K2) (Ch2-K1, K2) CN201 ↕ CN412
	Signal type		Edge	Pulse *	Edge	Pulse *
	External power supply	Allowable voltage	—		DC12 V	
		Allowable current	—		10 mA or less	
	Wire size		0.33 mm^2 (22 AWG), Twisted			
	Max. cable length		25 m			

*: Default setting is Edge signal. If you use Pulse signal, DIP switch 2-2 must be set to “On”.

Central remote controller (UTY-DCG∗Z∗)

Dry/Apply-voltage contact			Dry contact		Apply voltage	
Function	Emergency stop		● (Screen icon)		● (Screen icon)	
	All on/All off		● (Screen icon)		● (Screen icon)	
Specifications	Terminal		CN12 (Ch1: Pin 1-2)	CN12 (Ch1: Pin 1-2) CN13 (Ch2: Pin 1-2)	CN14 (Pin 1-3)	CN14 (Ch1: Pin 1-3) CN15 (Ch2: Pin 1-3)
	Signal type		Edge	Pulse	Edge	Pulse
	External power supply	Allowable voltage	—		DC 24 V	
		Allowable current	—		5 mA or less	
	Wire size		0.33 mm^2 (22 AWG), Twisted			
	Max. cable length		25 m			

EXTERNAL INPUT AND OUTPUT

■ Controller external output function

Controller			Touch panel controller	
Dry/Apply-voltage contact			Apply voltage	
Function	Operation status		●	—
	Error status		—	●
Specifications	Terminal		CN410 (Pin1-2)	CN410 (Pin3-4)
	External power supply	Allowable voltage	DC12 V	
		Allowable current	15 mA or less	
	Wire size		0.33 mm^2 (22 AWG), Twisted	
	Max. cable length		25 m	

Controller			Central remote controller	
Model name			UTY-DCG∗Z∗	
Dry/Apply-voltage contact			Apply voltage	
Function	Operation status		●	—
	Error status		—	●
Specifications	Terminal		CN18 (Pin3-4)	CN18 (Pin1-2)
	External power supply	Allowable voltage	DC12 V	
		Allowable current	15 mA or less	
	Wire size		0.33 mm^2 (22 AWG), Twisted	
	Max. cable length		25 m	

EXTERNAL INPUT AND OUTPUT

EXTERNAL INPUT
AND OUTPUT

Refrigerant R410A INVERTER

AIRSTAGE™ Variable Refrigerant Flow System

9. NOTES

CONTENTS

9. NOTES

1. Refrigerant leakage caution 09-1
1-1. Introduction.....09-1
1-2. Checking concentration limit.....09-2
1-3. Refrigerant concentration countermeasures.....09-4
2. Installation precautions 09-5
2-1. Indoor unit installation precautions 09-5
2-2. Outdoor unit installation precautions 09-9
3. Compatibility of VRF system.....09-10
3-1. Compatibility of controller system 09-10
3-2. Compatibility of adapter/convertor/maintenance tool 09-13
4. About connection between series 09-15
4-1. Piping connection 09-15
4-2. Wiring connection 09-16

1. Refrigerant leakage caution

The installer and system specialist shall secure safety against leakage according to local regulations or standards. The following standards may be applicable if local regulations are not available.

1-1. Introduction

This air conditioners use R410A as refrigerant. Though R410A is harmless and incombustible in it-self, the room in which the air conditioner is installed should be large enough that the refrigerant gas will not exceed the concentration limit even if the refrigerant gas leaks.

Concentration limit

Concentration limit is the limit of freon gas concentration where immediate measures can be taken without hurting the human body when refrigerant leaks in to the air. The concentration limit shall be described in units of kg/m^3 (freon gas weight in per m^3 air) to facilitate calculation.

Concentration limit for R410A	0.42 kg/m^3

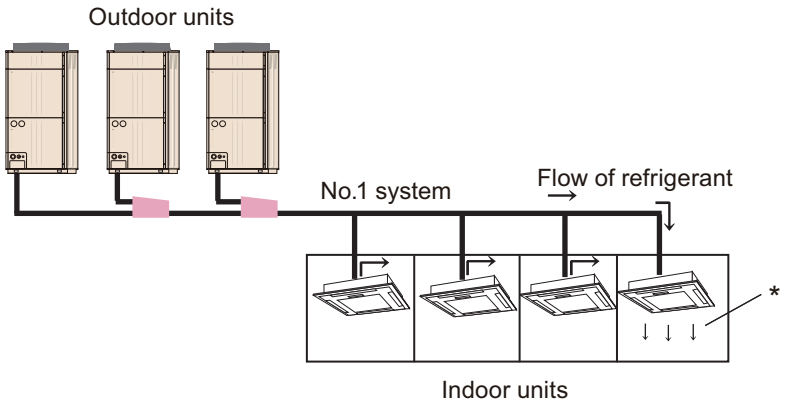

*: Room where refrigerant leaks (Refrigerant of the whole No.1 system flows out.)

NOTES

NOTES

1-2. Checking concentration limit

Check concentration limit following step 1 and 2, and take appropriate measures depending on the situation.

1. Calculate amount of refrigerant per refrigerant system.

Unit: kg

Amount of refrigerant system	+	Amount of additional refrigerant	=	Total amount of refrigerant in system
Amount of factory charge		Amount of refrigerant added to system based on pipe length, pipe size, and indoor units		When one refrigerant system is divided into 2 or more refrigerant systems and each system is independent, total amount of refrigerant of each system shall be adopted.

2. Calculate room volume by regarding portion marked in gray as one room or the smallest room.

(a) Without partition

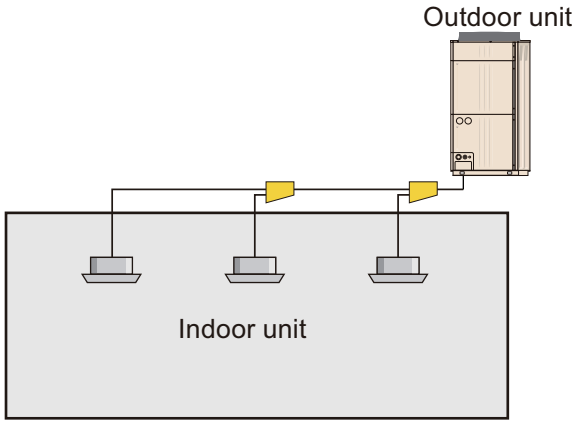

(b) When there are partitions, but there is an effective opening for ventilation between the rooms.

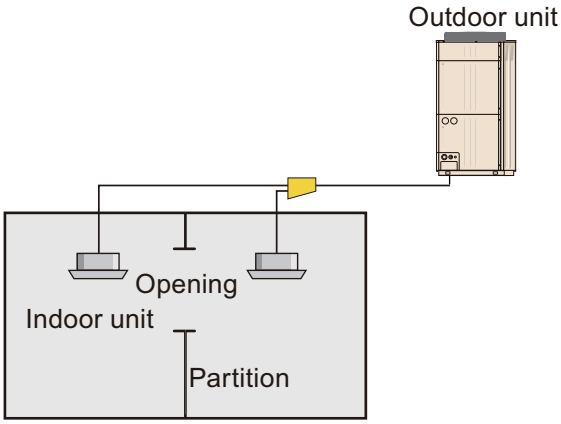

(c) When there are partitions, but there is an effective opening for ventilation between the rooms.

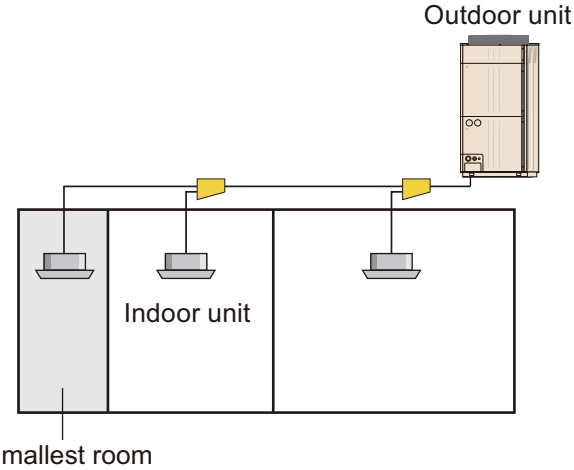

(d) With partition and without opening which serve as passage of air to adjoining room.

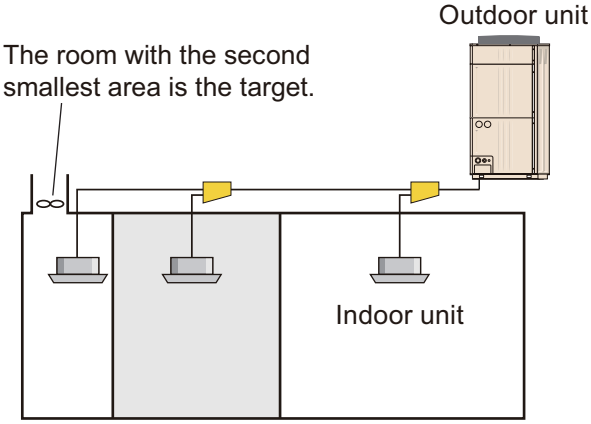

NOTES

NOTES

3. Calculate refrigerant concentration from the results of step 1 and 2.

$$\frac{\text{Total amount of refrigerant in refrigerant system (Unit: kg)}}{\text{Capacity of smallest room where indoor unit is installed (Unit: m}^3\text{)}} \leq \text{Refrigerant concentration (R410A) (Unit: kg/m}^3\text{)}$$

When the result of calculation exceeds the limiting concentration, perform the same calculation by shifting to second smallest, and the third smallest rooms until the final result is below the limiting concentration.

NOTES

NOTES

1-3. Refrigerant concentration countermeasures

When the concentration limit is exceeded, the designer will need to change the original design or use one of the countermeasures below to reduce potential exposure to refrigerant. Always consult local codes to ensure proper design.

- **Countermeasure 1**
  Provide opening for ventilation.
  Provide 0.15% or more opening to floor space both above and below, or provide opening without door.

- **Countermeasure 2**
  Reduce the total refrigerant charging amount of the refrigerant equipment.
  – Shorten the length of the refrigerant pipes.
    Move the location of the outdoor unit closer to the indoor unit, and reduce the total refrigerant charging amount by shortening the length of the refrigerant pipes.

  – Lower the capacity of the outdoor unit.
    Separate the outdoor unit into multiple units to lower the outdoor unit capacity for each refrigerant system and reduce the refrigerant charging amount.

    For example, by changing a 20 HP × 1 unit system to a 10 HP × 2 units system, the refrigerant amount for each refrigerant system can be reduced by about half.

- **Countermeasure 3**
  Provide gas leak alarm linked with mechanical ventilator. If using the mechanical ventilator, the backup power supply is required.

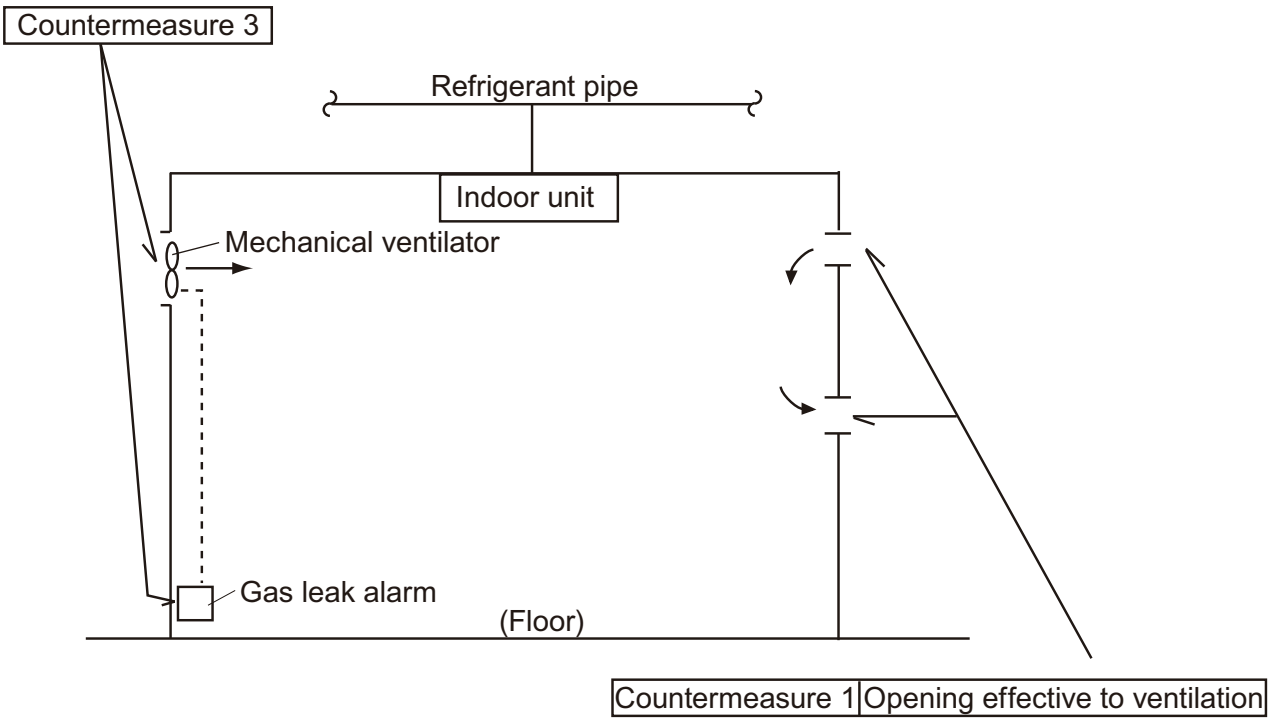

Pay special attention to the place, such as a basement, etc. Since refrigerant is heavier than air, refrigerant may accumulate.

NOTES

NOTES

2. Installation precautions

2-1. Indoor unit installation precautions

NOTE: The information listed below are general precautions.
Some models also include items that do not apply.

■ Places where prohibited for use

- Places where there is a danger of combustible gas leakage.
- Places where sulfur gas, chlorine gas, acid, alkali, or other matter which effects equipment is generated.
- Places where there is a lot of oil splash and steam such as kitchen or machinery room.
- Places where machinery which generates high frequencies is used.
- Ocean beaches and other areas where there is a lot of salt.
- Places where carbon fibers or any kind of powder suspended in the air.
- Inside of vehicles, ships, and other conveyances.
- Places where voltage fluctuations are large such as a factory.

NOTES

NOTES

■ Points to remember when installing

- The product shall be installed at a place which can withstand the weight and vibration of the indoor.
- To allow maintenance after refrigerant piping, drain piping, and electric wiring connection and installation, provide an installation service space and an inspection port, as required.
  *Installation service space is shown on "Dimensions" in Chapter 4. INDOOR UNITS on page 04-36.
- Be careful when installing the unit at the following places.

Condition	Contents	Countermeasures (Reference)
When the ceiling is high.	If the indoor unit is installed where the installation height given in the installation manual is exceeded, the temperature difference between the floor and ceiling of the room will be large and the heating effect will be poor. Moreover, even if the indoor unit is installed within the installation height, a similar phenomena will occur when installed in a room in which the doors are opened and closed frequently and hot air circulation is obstructed by furniture such as desks or chairs.	1. Switch the setting to the high ceiling mode. 2. Install a circulator. 3. Arrange the furniture in the room so that it does not obstruct the hot air.
When lower level directly contacts the outside air.	When the lower level of the room is a semi-open space such as warehouse or parking lot the surface temperature of the flooring will become low and the radiation of cold from the floor will increase. In this case, even if the room temperature is suitable, you may feel the foot level is cold.	
When the airflow distribution is poor.	When an indoor unit is installed in a position where the outlet airflow will directly contact people, a draft may be felt. In addition, when there are obstructions in the path of the intake and outlet airflow, the air distribution may become extremely bad.	1. Adjust the louver fins or take other measures matched to the site. 2. Change the indoor unit outlet.
When inside the ceiling is high temperature and high humidity.	When the indoor unit is installed where the inside of the ceiling is 30 °C RH80% or greater, the dew point temperature of the outer perimeter may become higher than the cabinet surface temperature and moisture will condense on the surface of the cabinet and water drops may fall inside the room. ("Figure 2-1 **Moist air curve**") In addition, the humidity may vary considerably the same as when the inside of the ceiling is close to hermetically sealed and used as the outside air intake path.	1. Add heat insulating material to the outside of the indoor unit cabinet. *Regarding the cassette type, use of optional High humidity correspondence kit is recommended. 2. Strengthen the heat insulating material of the refrigerant piping and drain piping too. ("Figure 2-2 **Work method when reinforcing the heat insulation of on-site piping**") 3. When the humidity inside the ceiling changes considerably, install a ventilation port.
When using an external duct.	When using an external duct to take in new fresh air, etc., condensation may form on the surface of the duct due to the effect of the outside air temperature and the humidity inside the ceiling.	Always perform heat insulation processing. (Heat insulating material: Glass wool 25 mm thick or more.)
When the remote controller installation site is bad.	If the cold or warm air blown out from the air conditioner directly contacts the thermostat section of the remote controller, the outlet temperature of the air conditioner may be sensed and room temperature control will be different from the room temperature, and “not cooled” or “not heated” or other trouble may occur. In addition, there is the possibility that the same kind of trouble may also occur when the remote controller is effected by direct sunlight.	1. Install the remote controller where it will not be directly exposed to the cold or hot air. 2. Install the remote controller where it will not be directly exposed to sunlight or strong lighting.

NOTES

NOTES

Condition	Contents	Countermeasures (Reference)
When installation environment is quiet.	When the wall mounted type was installed in a bedroom, living room, or other quiet place, the sound of the refrigerant flow may be sensed as noise and must be taken into account.	1. Plan installation of a model with external expansion valve. 2. Plan installation of a branch box farther from indoor unit. 3. Plan installation using another air conditioner.
When installing duct type in ceiling chamber system.	In the case of the ceiling chamber system (duct is not installed at indoor unit inlet side and room air is sucked into the indoor unit through the inside of the ceiling), the thermistor inside the indoor unit may not correctly detect the room temperature. • Heating operation: Room is not heated because the indoor unit is easily turned off by the thermostat. • Cooling operation: Room is too cold because the indoor unit is difficult to turn off by the thermostat.	Replace the indoor unit thermistor with optional Remote sensor unit, and install the sensor where the room temperature can be correctly detected.
When the outlet air is sucked in at duct type.	Cooling operation does not cool the room and heating operation does not heat the room because the short circuited indoor unit is not turned on by the thermostat.	1. Reconsider the ventilation port construction. 2. Replace the indoor unit thermistor with optional Remote sensor unit, and install the sensor where the room temperature can be correctly detected.
When using the wireless remote controller.	Signals may not be received when using it in a room illuminated by an inverter fluorescent lamp.	Turn on the fluorescent lamp and check if the indoor unit receives the signals from the remote controller. If the indoor unit does not receive the signals, consult an authorized service personnel.
When installing the inverter type.	It may generate noise in TV sets, stereos and PCs.	The inverter type should be installed at a sufficient distance from these equipments.

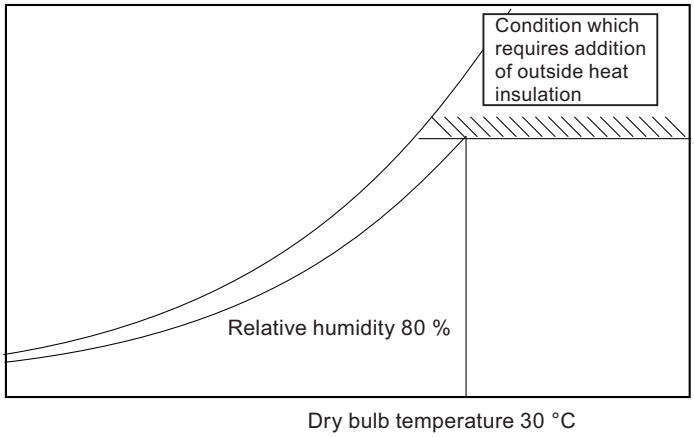

Figure 2-1 **Moist air curve**

NOTES

NOTES

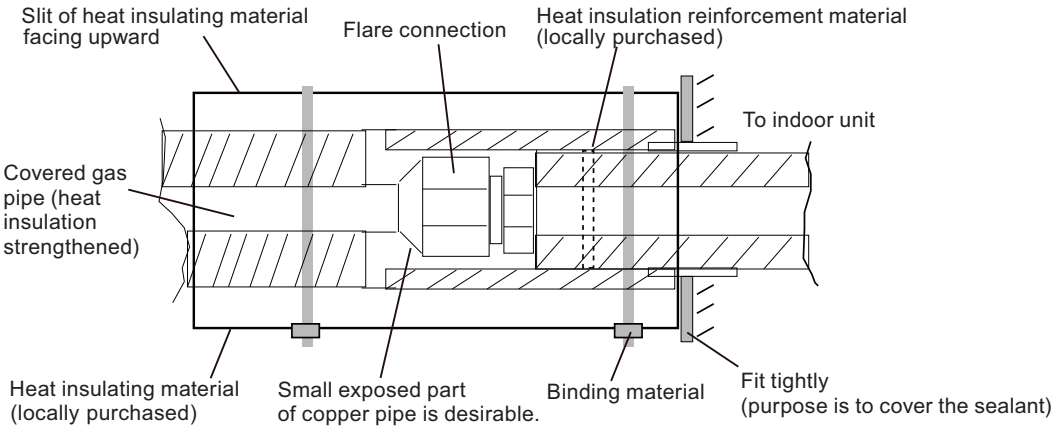

Figure 2-2 **Work method when reinforcing the heat insulation of on-site piping**

NOTES

NOTES

2-2. Outdoor unit installation precautions

NOTE: The information listed below are general precautions.
Some models also include items that do not apply.

■ Places where prohibited for use

- Places where there is a danger of combustible gas leakage.
- Places where sulfur gas, chlorine gas, acid, alkali, or other matter which effects equipment is generated.
- Places affected by heat radiation from other heat sources.
- Places where the air is stagnant.
- Places where machinery which generates high frequencies is used.
- Ocean beaches and other areas where there is a lot of salt.
- Inside of vehicles, ships, and other conveyances.
- Places where voltage fluctuations are large such as a factory.

■ Points to remember when installing

- The product shall be installed at a place which can withstand the weight and vibration of the outdoor unit.
- To allow maintenance after refrigerant piping, drain piping, and electric wiring connection, and installation, provide an installation service space.
  *Installation service space is shown in "Installation space" in Chapter 3. OUTDOOR UNITS on page 03-4.
- Be careful when installing the set at the following places.

Condition	Contents	Countermeasures (Reference)
When installed near adjacent houses.	Perform installation work so that operating sound does not disturb the neighbors.	1. Install a soundproof barrier. 2. Change the installation site.
When there is the possibility of strong wind.	• If the outdoor unit is exposed to strong wind, capacity may drop, frost may form during heating, and operation may be stopped by high pressure rise. In addition, when a very strong wind blows, the fan may be damaged. • When a very strong wind blows, there is the possibility of the outdoor unit being toppled over if held only by foundation bolts.	1. Install the outdoor unit with keeping a sufficient distance between the outlet side of the unit and a facing wall or fence. 2. Make the outlet direction and wind direction perpendicular. 3. Fasten the outdoor unit using toppling prevention hardware (purchased locally).
When snow accumulates.	If the outdoor unit is covered by accumulated snow, it may not be able to operate.	1. Make the foundation as high as possible. 2. Perform snow prevention work.
When installing the inverter type.	It may generate noise in TV sets, stereos and PCs.	The inverter type should be installed at a sufficient distance from these equipments.

NOTES

NOTES

3. Compatibility of VRF system

RELATED LINKS

"Outdoor unit and indoor unit lineup" in Chapter 1. GENERAL INFORMATION on page 01-1
"Optional parts" in Chapter 1. GENERAL INFORMATION on page 01-7
"Indoor unit type and applicable control method" in Chapter 5. CONTROL SYSTEM on page 05-8
"Applicable parts" in Chapter 10. OPTIONAL PARTS on page 10-17

3-1. Compatibility of controller system

• Central controller

Exterior	Part name	Model name	All series of outdoor unit
	System controller	UTY-APGXZ1	○ OK*
	System controller lite	UTY-ALGXZ1	○ OK
	Touch panel controller	UTY-DTG∗Z1	○ OK
	Central remote controller	UTY-DCG∗Z∗	○ OK
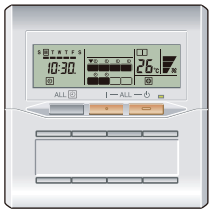	Group remote controller	UTY-CGG∗	○ OK

*: Different VRF series may be connected for each of the 4 VRF networks supported by the product, but different series may not coexist within the same network. (VR-IV, J-IV, J-IVS, J-IVL, VR-II, V-III, J-III, J-IIS, and J-IIIL can exist together in same network. V and S can exist together in same network, too.)

NOTES

NOTES

• Individual controller

Exterior	Part name	Model name	All series of outdoor unit
	Wired remote controller (Touch panel)	UTY-RNR∗Z∗	○ OK*
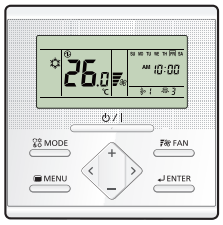	Wired remote controller	UTY-RLR∗	○ OK*
	Wired remote controller	UTY-RCR∗Z1	○ OK
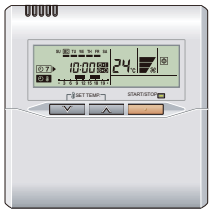	Wired remote controller	UTY-RNK∗	○ OK
	Simple remote controller	UTY-RSR∗	○ OK
	Simple remote controller (Without operation mode)	UTY-RHR∗	○ OK
	Simple remote controller	UTY-RSK∗	○ OK

NOTES

NOTES

Exterior	Part name	Model name	All series of outdoor unit
	Simple remote controller (Without operation mode)	UTY-RHK∗	○ OK
	Wireless remote controller	UTY-LNH∗	○ OK

*: It is not connectable with indoor units of previous model.

NOTES

NOTES

3-2. Compatibility of adapter/convertor/maintenance tool

Exterior	Part name	Model name	All series of outdoor unit
	Network converter	UTY-VTGX	○ OK
	Network converter (AC power supply)	UTY-VTGXV	○ OK
	Network converter	UTY-VGGXZ1	○ OK
	Network converter for LonWorks	UTY-VLGX	○ OK
	KNX converter for VRF	UTY-VKGX	○ OK
	KNX converter for indoor unit	UTY-VKSX	○ OK*1
	Modbus converter for VRF	UTY-VMGX	○ OK
	Modbus converter for indoor unit	UTY-VMSX	○ OK*1
	BACnet gateway (Hardware)	UTY-VBGX	○ OK
	BACnet gateway (Software)	UTY-ABGXZ1	○ OK*2

NOTES

NOTES

Exterior	Part name	Model name	All series of outdoor unit
	Wireless LAN adapter	UTY-TFSXZ1	○ OK*1
	Signal amplifier	UTY-VSGXZ1	○ OK
	External switch controller	UTY-TERX UTY-TEKX	○ OK
	Service tool	UTY-ASGXZ1	○ OK
	Web monitoring tool	UTY-AMGXZ1	○ OK*2

- *1: Following indoor units cannot be connected.
  - 4-way flow cassette type
  - High efficiency duct type
- *2: Different VRF series may be connected for each of the 4 VRF networks supported by the product, but different series may not coexist within the same network. (VR-IV, J-IV, J-IVS, J-IVL, VR-II, V-III, J-III, J-IIS, and J-IIIL can exist together in same network. V and S can exist together in same network, too.)

NOTES

NOTES

4. About connection between series

4-1. Piping connection

NOTE: Connection over different series in same refrigerant system is prohibited.

- **Example 1 (OK)**

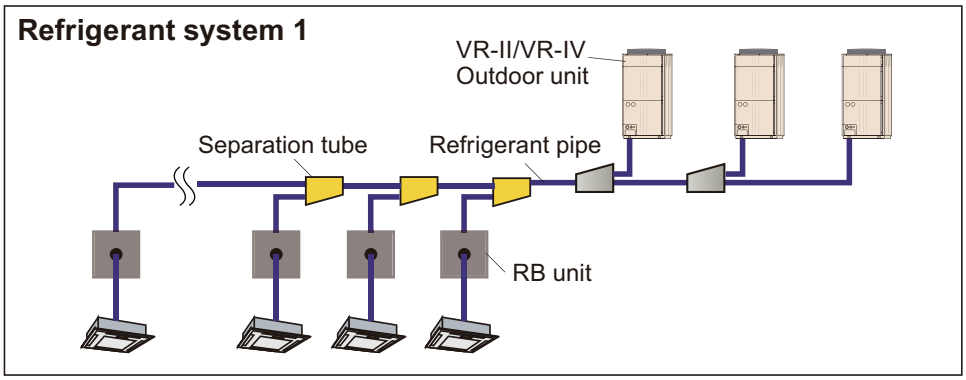

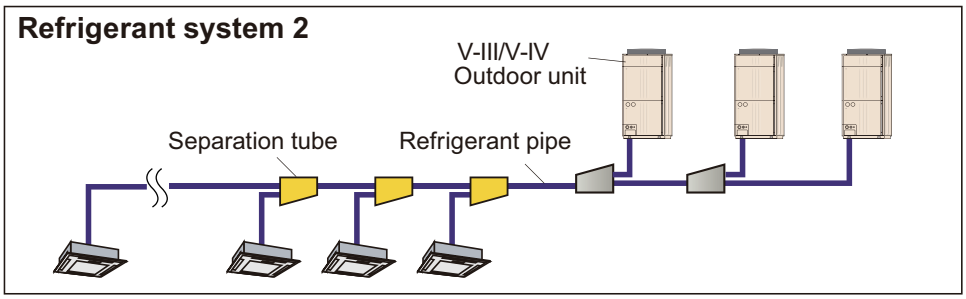

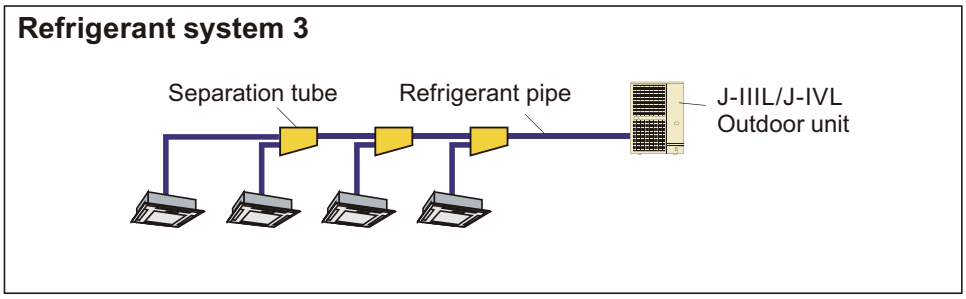

- **Example 2 (Prohibited)**

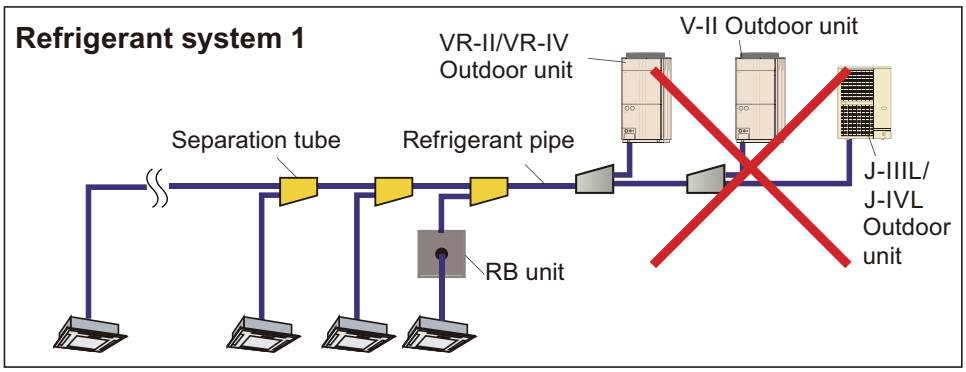

NOTES

NOTES

4-2. Wiring connection

NOTE: Connection over different series in same refrigerant system is prohibited.

• Example 1 (OK)

When wiring to each refrigerant system

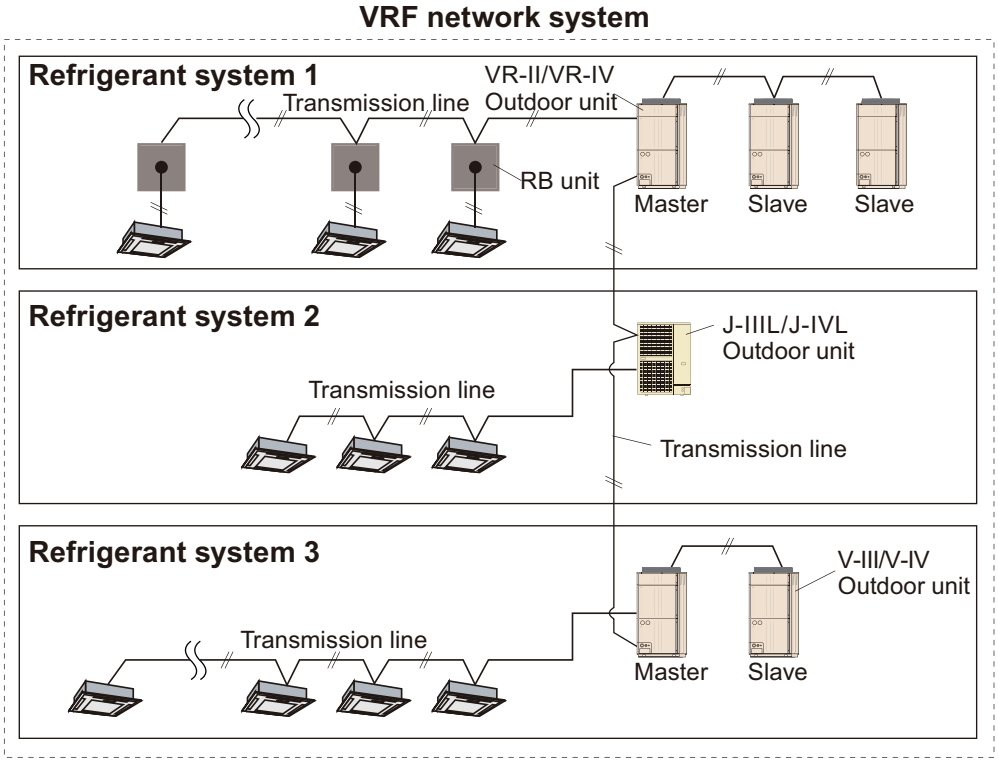

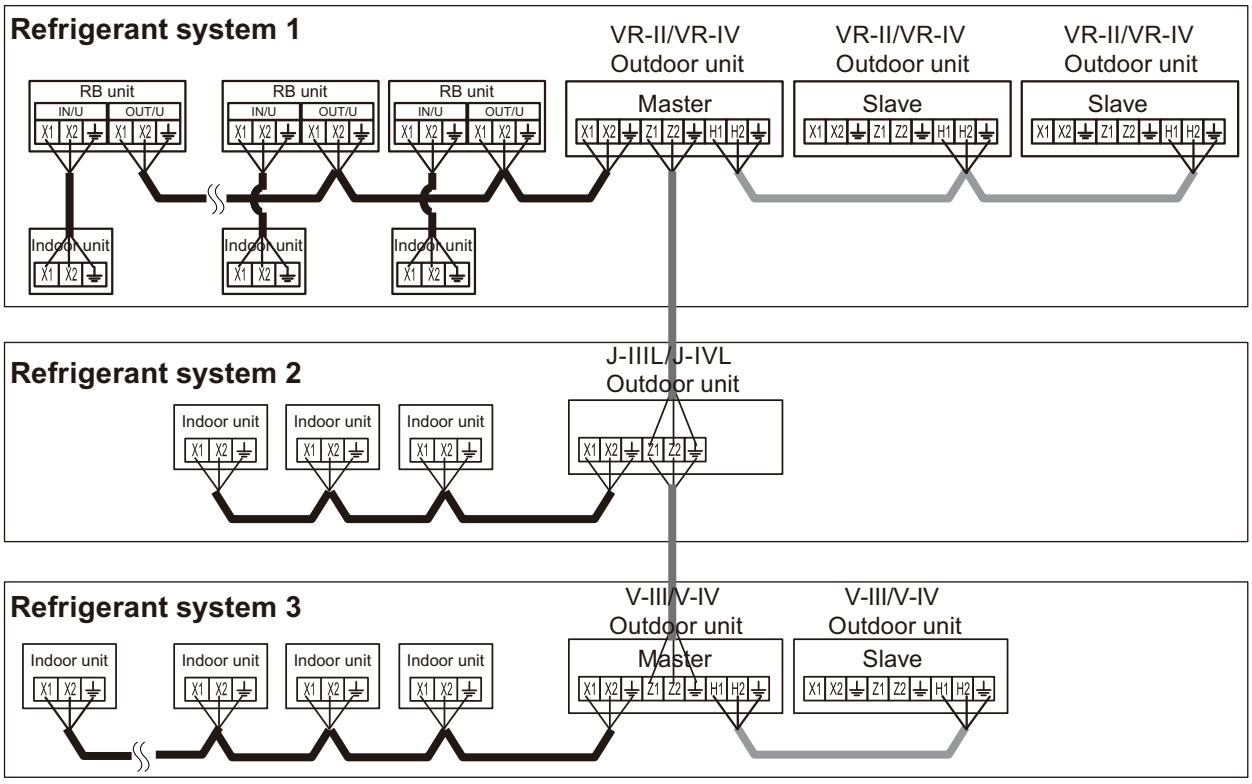

Figure 4-4 **Connection method to terminal**

NOTES

NOTES

- **Example 2 (OK)**

When stepping over, and wiring to the refrigerant system

VRF network system

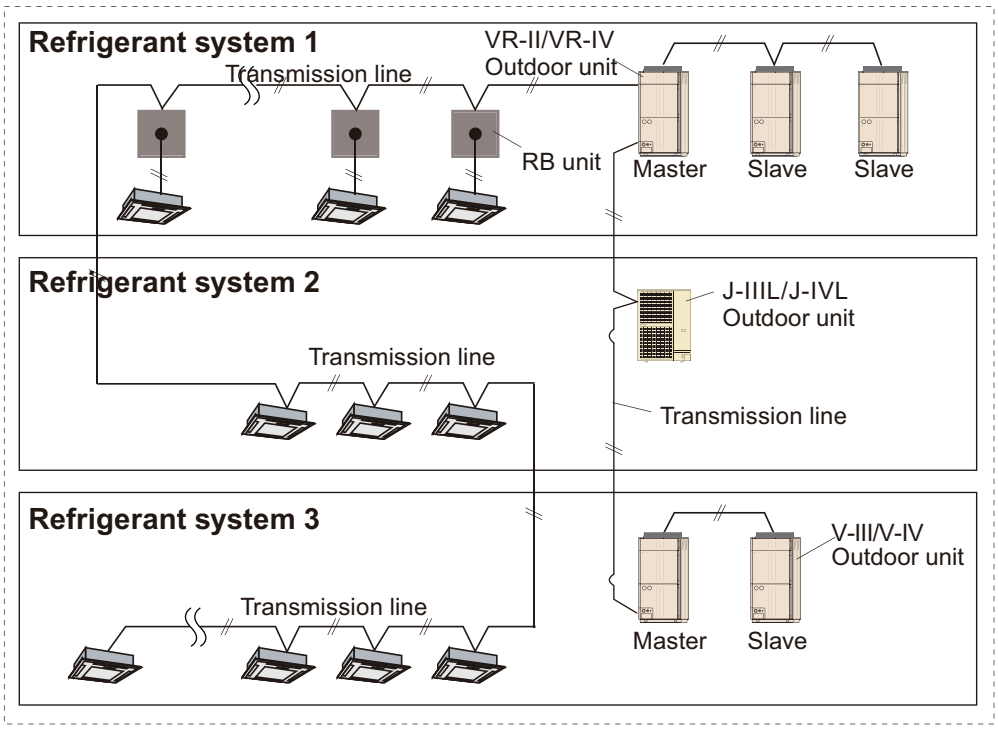

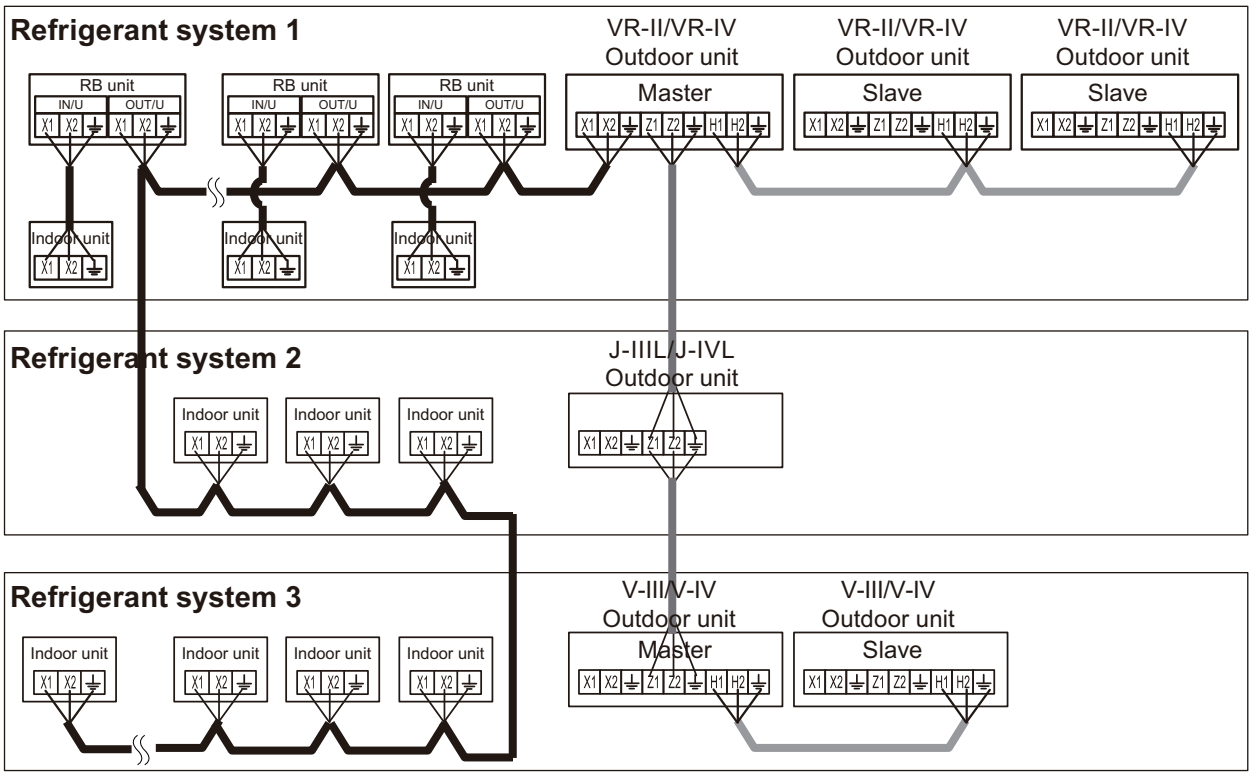

Figure 4-6 **Connection method to terminal**

NOTES

NOTES

• Example 3 (Prohibited)

NOTE: Slave units of V series and J series cannot be connected.

VRF network system

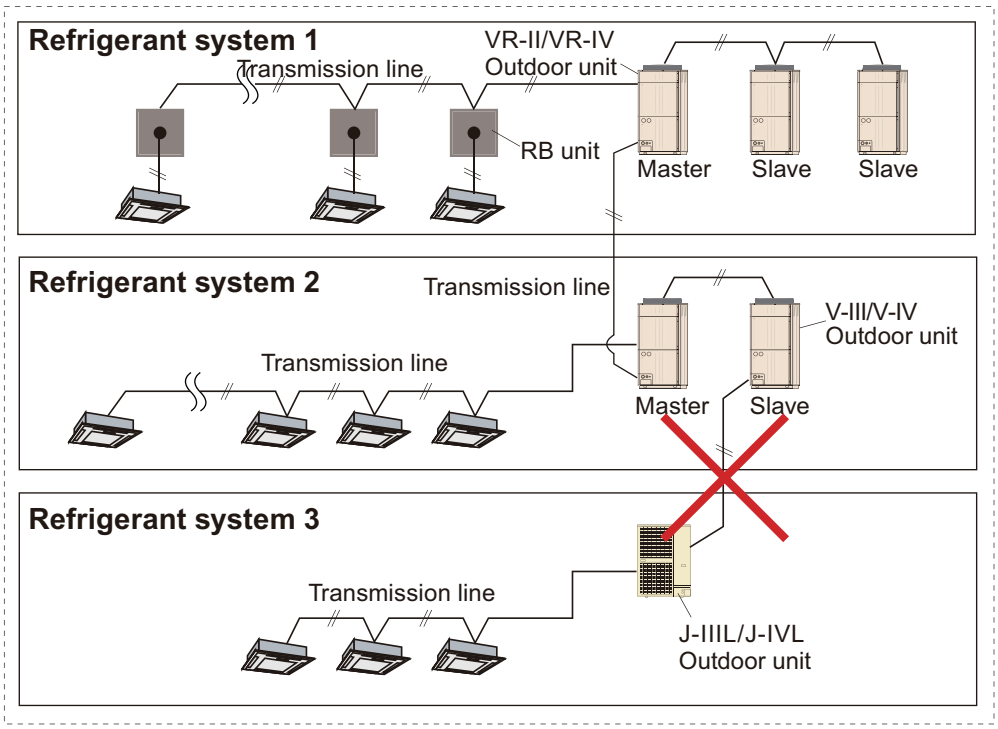

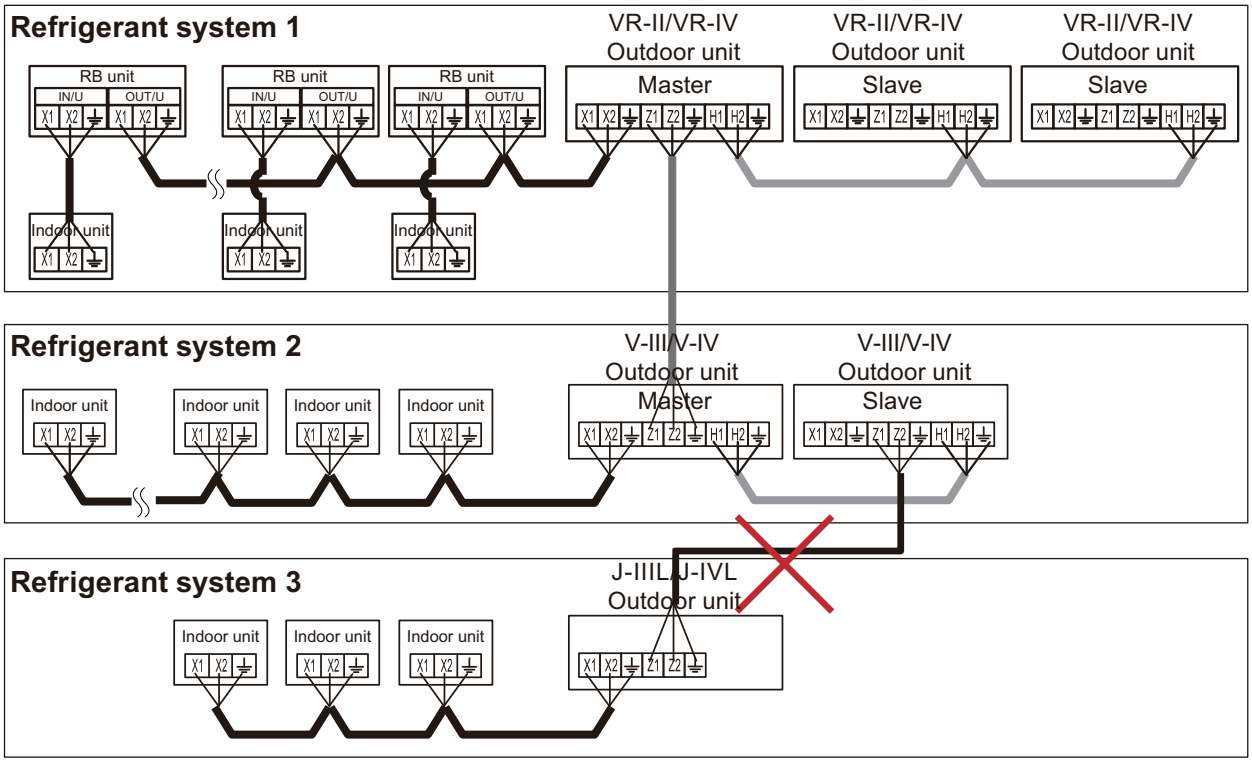

Figure 4-8 **Connection method to terminal**

NOTES

NOTES

Refrigerant R410A INVERTER

AIRSTAGE™ Variable Refrigerant Flow System

10. OPTIONAL PARTS

CONTENTS

10. OPTIONAL PARTS

1. EV kit 10-1
1-1. Applicable models 10-1
1-2. Specifications 10-1
1-3. Dimensions.....10-1
1-4. Accessories 10-2
2. Separation tube 10-3
2-1. Connection capacity 10-3
2-2. Dimensions.....10-4
3. Header 10-5
3-1. Connection capacity 10-5
3-2. Dimensions.....10-6
4. Controllers 10-8
4-1. Central control 10-8
4-2. Individual control.....10-8
5. Adapter/Converter/Maintenance tool.....10-10
6. Cassette grille.....10-12
7. Others.....10-13
7-1. Parts list.....10-13
7-2. Applicable parts 10-17
8. Optional parts installation 10-23
8-1. Drain pump unit for duct type.....10-23
8-2. Drain pump unit for Ceiling type 10-27
8-3. Fresh air intake kit for Compact cassette type 10-28
8-4. Fresh air intake kit for Circular flow cassette type and 4-way flow cassette type.....10-38
8-5. Auto louver grille kit 10-49
8-6. External power supply unit (UTZ-GXXA) 10-53
8-7. External power supply unit (UTZ-GXXC).....10-56

1. EV kit

1-1. Applicable models

Model	Applicable indoor unit	
	Type	Model
UTR-EV09XB	Wall mounted	AS∗E004GCEH, AS∗E007GCEH, AS∗E009GCEH
	Compact floor	AG∗E004GCEH, AG∗E007GCEH, AG∗E009GCEH
UTR-EV14XB	Wall mounted	AS∗E012GCEH, AS∗E014GCEH
	Compact floor	AG∗E012GCEH, AG∗E014GCEH

1-2. Specifications

Model name		UTR-EV09XB	UTR-EV14XB
Dimensions (H × W × D)	mm	121 × 416 × 65	
Weight	g	1,500	
Connection wire length method	m	5	

1-3. Dimensions

■ Models: UTR-EV09XB and UTR-EV14XB

Unit: mm

- **EV kit**

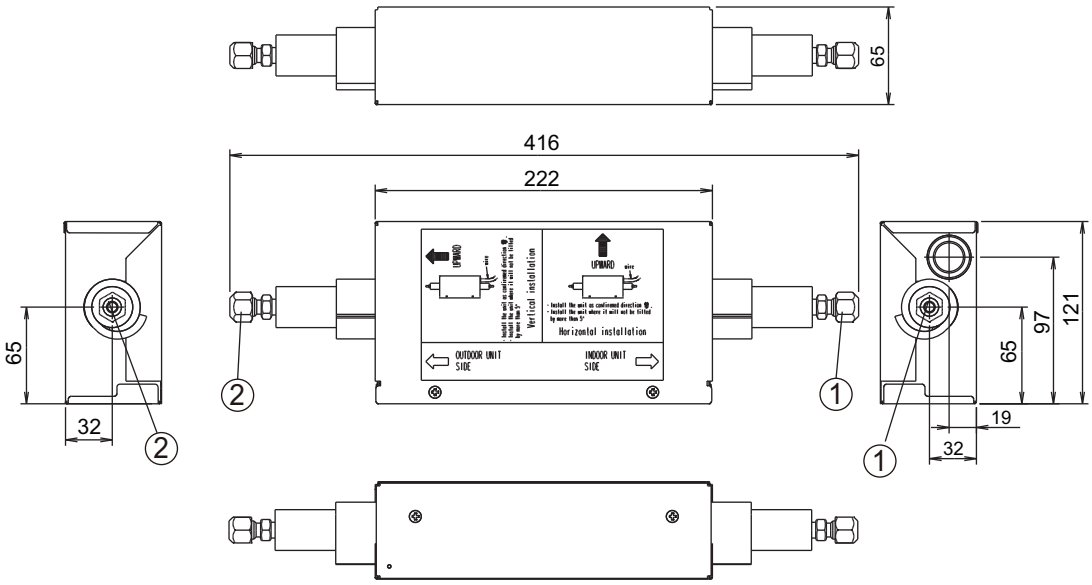

①	Refrigerant pipe flare connection (liquid pipe)	Indoor unit side	ø 6.35 mm
②		Outdoor unit side	ø 6.35 mm

- **Hanger**

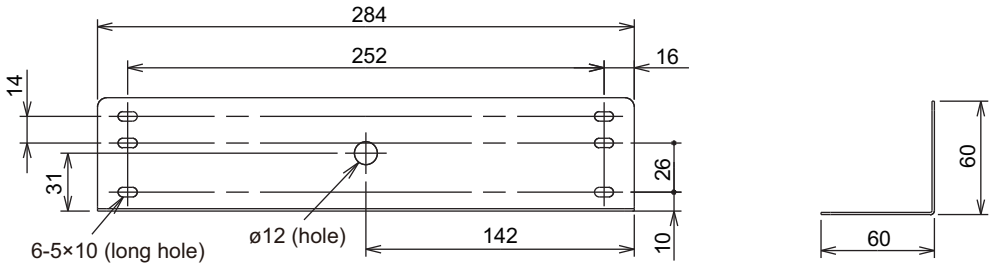

1-4. Accessories

Part name	Exterior	Q'ty	Part name	Exterior	Q'ty
EV kit	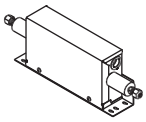	1	Cable tie (Large)		5
M10 nut A (with flange)		1	Cable tie (Small)		2
M10 nut B (with spring lock washer)		1	Coupler heat insulation		2
Screw	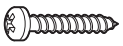	4	Tube		1

2. Separation tube

2-1. Connection capacity

Connection capacity values written in this section are reference values. For pipe designing, refer to "Piping design" in Chapter 6. SYSTEM DESIGN on page 06-17.

For 2 pipes		
Total cooling capacity of indoor units at rated condition (kW)	**Model name**	**Connection capacity of separation tube (kW)**
19.6 or less	UTP-AX054A	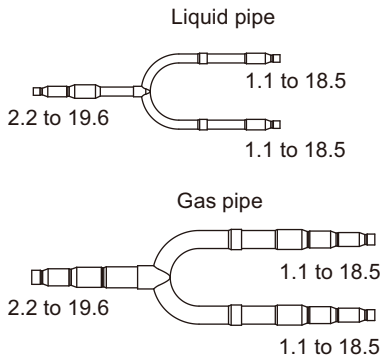

2-2. Dimensions

■ Model: UTP-AX054A

Exterior (Unit: mm)	Part name	Q'ty
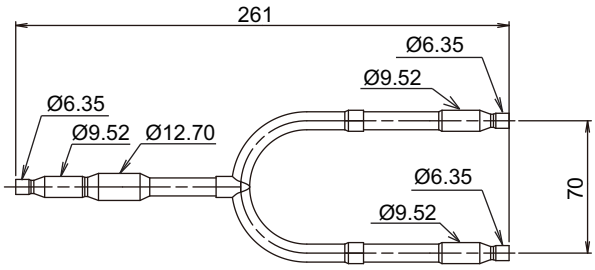	Liquid pipe	1
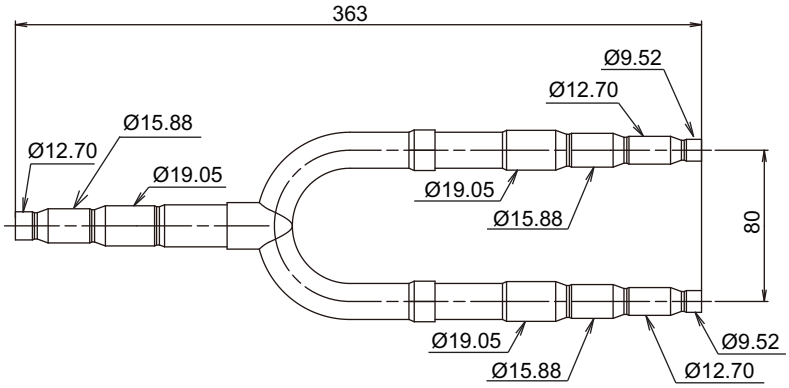	Gas pipe	1
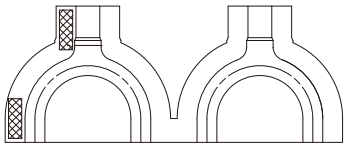 For liquid pipe × 1 For gas pipe × 1	Heat insulation	2
	Tape	8

3. Header

3-1. Connection capacity

For pipe designing, refer to "Piping design" in Chapter 6. SYSTEM DESIGN on page 06-17.

Total cooling capacity of indoor units (kW)	3 to 6 Branches	3 to 8 Branches
28.0 or less	UTR-H0906L	UTR-H0908L

3-2. Dimensions

■ Model: UTR-H0906L

Exterior (Unit: mm)	Part name	Q'ty
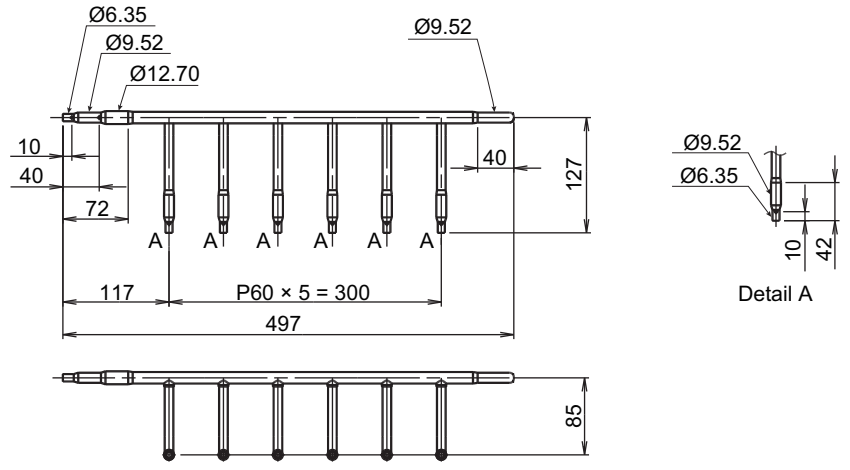	Liquid pipe	1
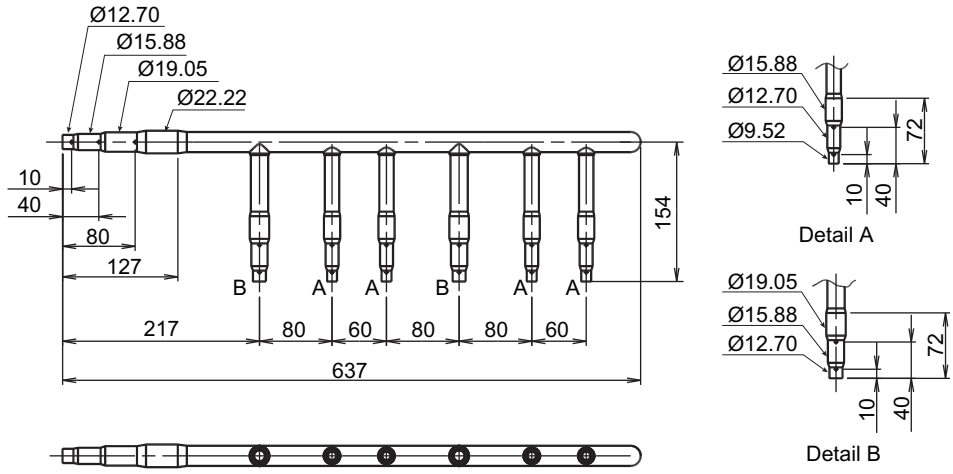	Gas pipe	1
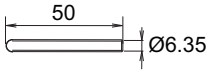	Closed pipe A	4
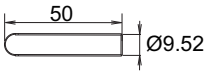	Closed pipe B	2
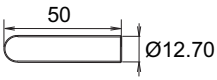	Closed pipe C	2
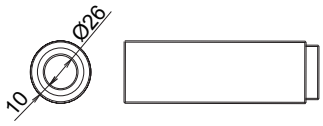	Closed pipe insulation	6
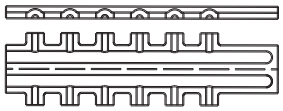	Heat insulation for liquid pipe	1
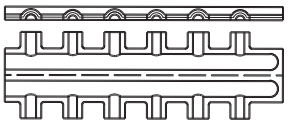	Heat insulation for gas pipe	1
	Binder	10

■ Model: UTR-H0908L

Exterior (Unit: mm)	Part name	Q'ty
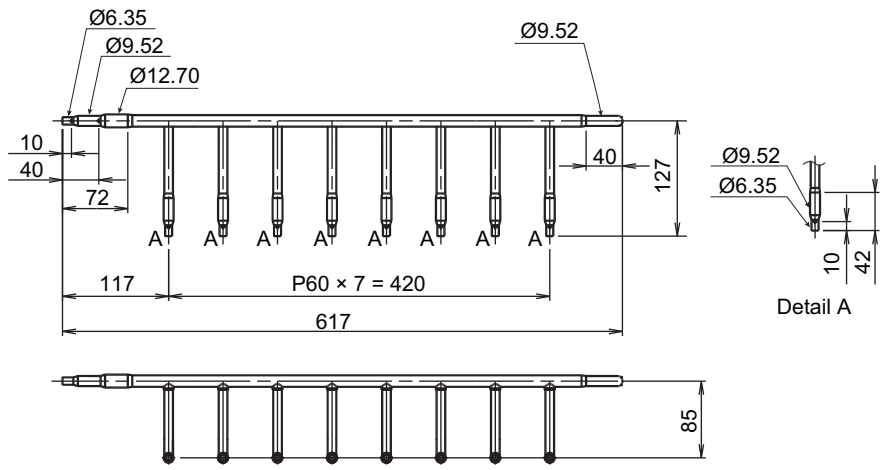	Liquid pipe	1
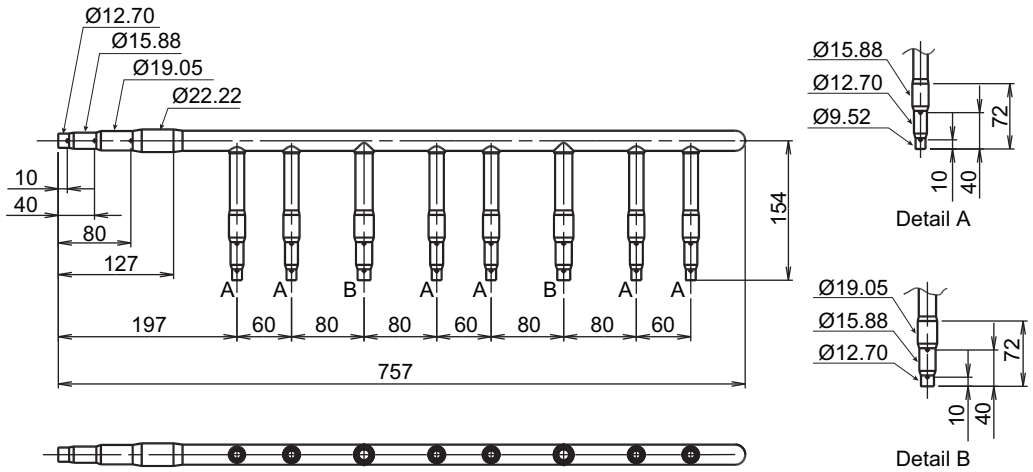	Gas pipe	1
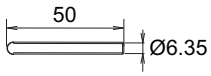	Closed pipe A	6
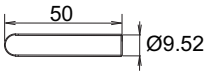	Closed pipe B	4
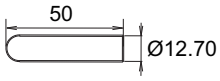	Closed pipe C	2
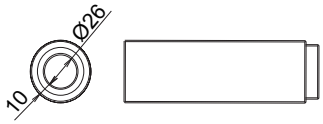	Closed pipe insulation	8
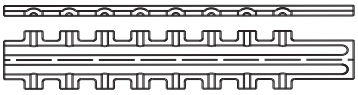	Heat insulation for liquid pipe	1
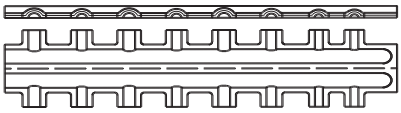	Heat insulation for gas pipe	1
	Binder	10

4. Controllers

4-1. Central control

Exterior	Part name	Model name	Summary
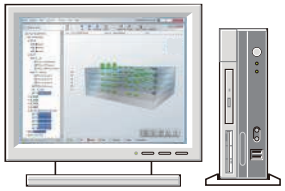	System controller	UTY-APGXZ1	System controller realizes the advanced integrated monitoring & control of VRF network system from small scale buildings to large scale buildings. Optional: UTY-PEGXZ1, UTY-PPGXP2
	System controller lite	UTY-ALGXZ1	System controller lite has standard functions sufficient for air conditioner management in small and medium scale buildings. Optional: UTY-PLGXA2, UTY-PLGXR2, UTY-PLGXE2, UTY-PLGXP2, UTY-PLGXX2
	Touch panel controller	UTY-DTG∗Z1	Controls and monitors our air conditioner via LAN or Internet. Allows user or tenant to manage the air conditioning by using assigned equipment only such as their PCs or smart devices from anywhere. Optional: UTY-PTGXA
	Central remote controller	UTY-DCG∗Z∗	Central control of small and medium sized buildings and tenants. Central remote controller realizes the trouble support function, remote monitoring, and remote operation.
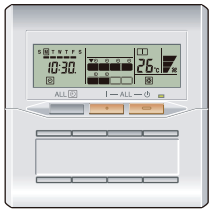	Group remote controller	UTY-CGG∗	Group control of indoor units with simple operation. Network converter (UTY-VGGXZ1) is required to connect Group remote controllers to a VRF network system.

4-2. Individual control

Exterior	Part name	Model name	Summary
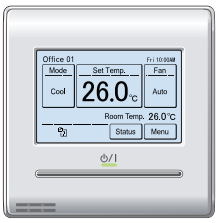	Wired remote controller (Touch panel)	UTY-RNR∗Z∗	Easy finger touch operation with LCD panel. Backlight LCD enables easy operation in a dark room. Wire type: Non-polar 2-wire
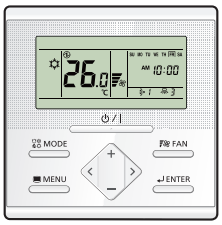	Wired remote controller	UTY-RLR∗	High visibility and easy operation. Room temperature can be accurately controlled using the built-in thermo sensor. Wire type: Non-polar 2-wire

Exterior	Part name	Model name	Summary
	Wired remote controller	UTY-RCR∗Z1	High visibility and easy operation. Room temperature can be accurately controlled using the built-in thermo sensor. Wire type: Non-polar 2-wire
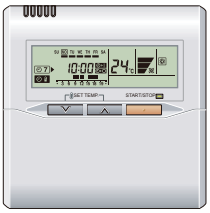	Wired remote controller	UTY-RNK∗	Room temperature can be controlled by detecting the temperature accurately with built-in thermo sensor. Wire type: Polar 3-wire
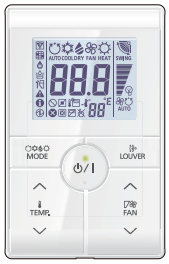	Simple remote controller	UTY-RSR∗	Compact remote controller concentrates on the basic functions such as Start/Stop, fan control, temperature setting, and operation mode. Wire type: Non-polar 2-wire
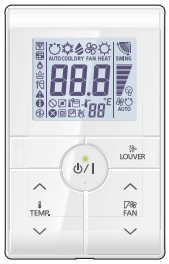	Simple remote controller (Without operation mode)	UTY-RHR∗	Compact remote controller concentrates on the basic functions such as Start/Stop, fan control, temperature setting. Wire type: Non-polar 2-wire
	Simple remote controller	UTY-RSK∗	Compact remote controller concentrates on the basic functions such as Start/Stop, fan control, temperature setting, and operation mode. Wire type: Polar 3-wire
	Simple remote controller (Without operation mode)	UTY-RHK∗	Compact remote controller concentrates on the basic functions such as Start/Stop, fan control, temperature setting. Wire type: Polar 3-wire
	Wireless remote controller	UTY-LNH∗	Unit control is performed by wireless remote controller.

5. Adapter/Converter/Maintenance tool

Exterior	Part name	Model name	Summary
	Network converter	UTY-VTGX	Split type systems can be controlled from a central controller via the converter.
	Network converter (AC power supply)	UTY-VTGXV	Split type systems can be controlled from a central controller via the converter.
	Network converter	UTY-VGGXZ1	Split type systems can be controlled from a central controller via the converter. Group remote controller can be controlled up to two refrigerant systems via the converter.
	Network converter for LonWorks	UTY-VLGX	For connection between VRF network system and a LonWorks open network for management of small to medium-sized BMS.
	KNX converter for VRF	UTY-VKGX	For connection between VRF network system and a KNX open network.
	KNX converter for indoor unit	UTY-VKSX	For connection between Single split indoor unit and a KNX open network.
	Modbus converter for VRF	UTY-VMGX	For connection between VRF network system and a Modbus open network.
	Modbus converter for indoor unit	UTY-VMSX	For connection between Single split indoor unit and a Modbus open network.
	BACnet gateway (Hardware)	UTY-VBGX	For connection between VRF network system to the BMS system using BACnet protocol. Supports max. 128 indoor units.
	BACnet gateway (Software)	UTY-ABGXZ1	The central control of maximum 1,600 indoor units can be realized by connecting the VRF network system to the BACnet, a global standard for open network.

OPTIONAL PARTS

Exterior	Part name	Model name	Summary
	Wireless LAN adapter	UTY-TFSXZ1	Remotely manage an Air Conditioning system using mobile devices such as Smartphones, and tablets.
	Signal amplifier	UTY-VSGXZ1	If the total length of transmission line exceeds 500 m, or the number of units exceeds 64, a Signal amplifier will be necessary.
	External switch controller	UTY-TERX UTY-TEKX	Air conditioner switching can be controlled by connecting other external sensor switches.
	Service tool	UTY-ASGXZ1	Extensive monitoring and analysis functions for installation and maintenance. Operation status and error history can be grasped promptly and adequately.
	Web monitoring tool	UTY-AMGXZ1	Trouble free operation at all times by web monitoring system. The operation status of the VRF network system within the building can be monitored in real time over the Internet.

OPTIONAL PARTS

6. Cassette grille

Exterior	Model name	Remarks
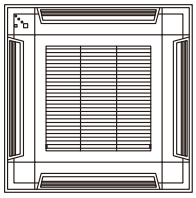 For Compact cassette type	UTG-UF∗E-W	Grid type grille
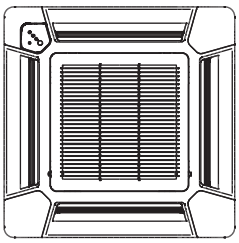 For Compact cassette type	UTG-UF∗C-W	Standard type grille
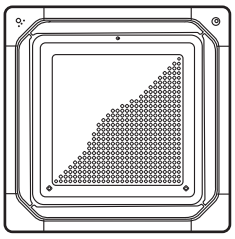 For Circular flow cassette type	UTG-UK∗C-W UTG-UK∗A-B	
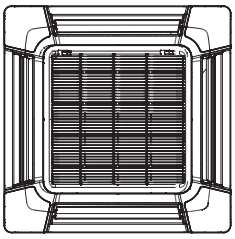 For 4-way flow cassette type	UTG-UG∗A-W	
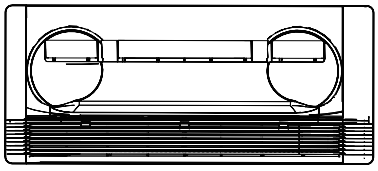 For 3D flow cassette type	UTG-US∗A-W	
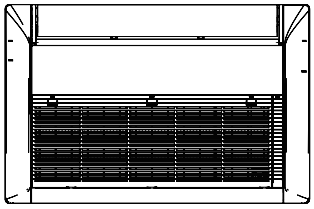 For One way flow cassette type	UTG-UN∗A-W	
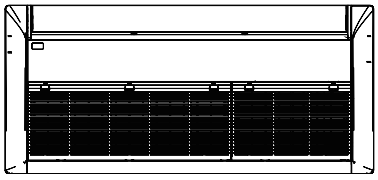 For One way flow cassette type	UTG-UN∗B-W	

7. Others

7-1. Parts list

NOTE: For applicable indoor unit type, refer to "Applicable parts" on page 10-17.

Exterior	Part name	Model name
	Flange (Square)	UTD-SF045T
	Flange (Round)	UTD-RF204
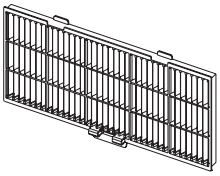 × 2 pcs	Long-Life filter	UTD-LF25NA
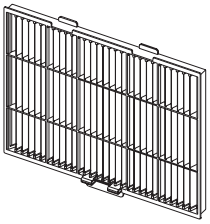 × 2 pcs	Long-Life filter	UTD-LF60KA
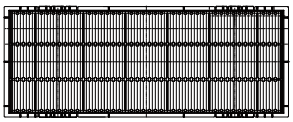 × 2 pcs	Long-Life filter	UTD-LFNA
	Drain pump unit	UTZ-PX1NBA
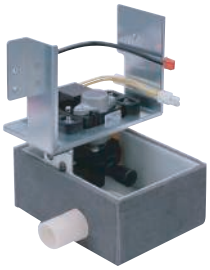	Drain pump unit	UTR-DPB24T
	Air outlet shutter plate	UTR-YDZB
	Air outlet shutter plate	UTR-YDZK

Exterior	Part name	Model name
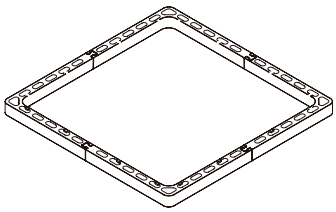	Panel spacer	UTG-BKXA-W
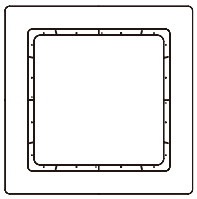	Wide panel	UTG-AKXA-W
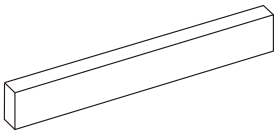	Half concealed kit	UTR-STA
	IR receiver unit	UTY-TRHX
	IR receiver unit	UTB-YWC
	IR receiver unit	UTY-LRH∗B1
	IR receiver unit	UTY-LBHXD
	Human sensor kit	UTY-SHZXC
	Remote sensor unit	UTY-XSZX

Exterior	Part name	Model name
Install when the condition under the roof is over 80% in humidity and over 30 °C in temperature. 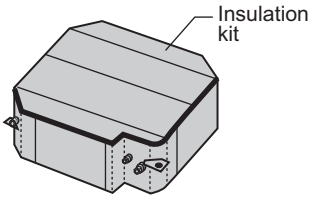	Insulation kit for high humidity	UTZ-KXRA UTZ-KXGA UTZ-KXGB UTZ-KXGC
	Fresh air intake kit	UTZ-VXAA
	Fresh air intake kit	UTZ-VXGA UTZ-VXRA
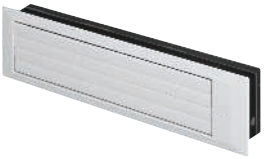	Auto louver grille kit	UTD-GXTA-W UTD-GXTB-W UTD-GXTC-W
	Auto louver grille kit	UTD-GXSA-W UTD-GXSB-W UTD-GXSC-W
	External power supply unit	UTZ-GXXA
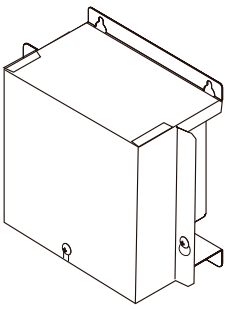	External power supply unit	UTZ-GXXC

Exterior	Model name
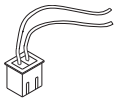 For Outdoor unit	UTY-XWZXZ6
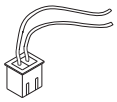 For Indoor unit and Central remote controller	UTY-XWZXZ7
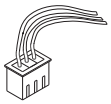 For Central remote controller	UTY-XWZXZ8
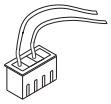 For Outdoor unit	UTY-XWZXZ9
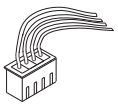 For Touch panel controller and Central remote controller	UTY-XWZXZA
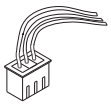 For Indoor unit	UTY-XWZXZB
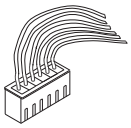 For Indoor unit	UTY-XWZXZC
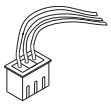 For Indoor unit	UTY-XWZXZD
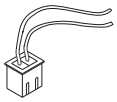 For Indoor unit	UTY-XWZXZE
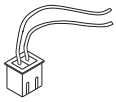 For Outdoor unit	UTY-XWZXZF

7-2. Applicable parts

RELATED LINKS

"Indoor unit type and applicable control method" in Chapter 5. CONTROL SYSTEM on page 05-8
"Compatibility of VRF system" in Chapter 9. NOTES on page 09-10

■ For cassette type

Type	Air outlet shutter plate		Panel spacer	Wide panel
	UTR-YDZB	UTR-YDZK	UTG-BKXA-W	UTG-AKXA-W
Compact cassette	●			
Circular flow cassette		●	●	●
3D flow cassette				
4-way flow cassette		●	●	●
One way flow cassette				

Type	IR receiver unit			Human sensor kit
	UTY-TRHX	UTY-LRH∗B1	UTY-LBHXD	UTY-SHZXC
Compact cassette				
Circular flow cassette			●	●
3D flow cassette	●			
4-way flow cassette		●		
One way flow cassette	●			

Type	Fresh air intake kit			External power supply unit
	UTZ-VXAA	UTZ-VXRA	UTZ-VXGA	UTZ-GXXA UTZ-GXXC
Compact cassette	●			●
Circular flow cassette		●		●
3D flow cassette				●
4-way flow cassette		●	●	
One way flow cassette				●

Type	External connect kit				
	UTY-XWZXZ7	UTY-XWZXZB	UTY-XWZXZC	UTY-XWZXZD	UTY-XWZXZE
Compact cassette	●	●	●	●	●
Circular flow cassette	●	●	●	●	●
3D flow cassette	●	●	●	●	●
4-way flow cassette	●	●	●	●	●
One way flow cassette	●	●	●	●	●

Type	Model name	Optional parts		
		Insulation kit for high humidity		
		UTZ-KXRA UTZ-KXGA	UTZ-KXRA UTZ-KXGB	UTZ-KXGC
Compact cassette				●
Circular flow cassette	AUXN009GLAH		●	
	AUXN012GLAH		●	
	AUXN014GLAH		●	
	AUXM018GLEH		●	
	AUXM024GLEH		●	
	AUXM030GLEH		●	
	AUXK018GLEH	●		
	AUXK024GLEH	●		
	AUXK030GLEH	●		
	AUXK034GLEH	●		
	AUXK036GLEH	●		
	AUXK045GLEH	●		
	AUXK054GLEH	●		
3D flow cassette				
4-way flow cassette	AUXD18GALH		●	
	AUXD24GALH		●	
	AUXA30GALH	●		
	AUXA34GALH	●		
	AUXA36GALH	●		
	AUXA45GALH	●		
	AUXA54GALH	●		
One way flow cassette				

■ For duct type

Type	Flange		Drain pump unit	Remote sensor unit
	UTD-SF045T	UTD-RF204	UTZ-PX1NBA	UTY-XSZX
Low static pressure duct (Mini duct)				●
Low static pressure duct (Slim duct)/Slim concealed floor				●
Low static pressure duct (High efficiency)	●	●	●	●
Medium static pressure duct	●	●	●	●
High static pressure duct				●

Type	External connect kit				
	UTY-XWZXZ7	UTY-XWZXZB	UTY-XWZXZC	UTY-XWZXZD	UTY-XWZXZE
Low static pressure duct (Mini duct)	●	●	●	●	●
Low static pressure duct (Slim duct)/Slim concealed floor	●	●	●	●	●
Low static pressure duct (High efficiency)	●	●	●	●	●
Medium static pressure duct	●	●	●	●	●
High static pressure duct	●	●	●	●	●

Type		Long-Life filter		
	Model name	UTD-LF25NA	UTD-LFNA	UTD-LF60KA
Low static pressure duct (Mini duct)				
Low static pressure duct (Slim duct)/Slim concealed floor				
Low static pressure duct (High efficiency)		●		
Medium static pressure duct		●		
High static pressure duct	ARXC036GTEH			●
	ARXC045GTEH			●

Type		IR receiver unit		External power supply unit
	Model name	UTB-YWC	UTY-TRHX	UTZ-GXXA UTZ-GXXC
Low static pressure duct (Mini duct)			●	●
Low static pressure duct (Slim duct)/Slim concealed floor			●	●
Low static pressure duct (High efficiency)			●	
Medium static pressure duct			●	●
High static pressure duct	ARXC036GTEH		●	●
	ARXC045GTEH		●	●

Type		Auto louver grille kit		
	Model name	UTD-GXTA-W	UTD-GXTB-W	UTD-GXTC-W
Low static pressure duct (Mini duct)	ARXK004GLGH	●		
	ARXK007GLGH	●		
	ARXK009GLGH	●		
	ARXK012GLGH	●		
	ARXK014GLGH	●		
	ARXK018GLGH		●	
	ARXK024GLGH			●
Low static pressure duct (Slim duct) /Slim concealed floor	ARXD007GLEH	●		
	ARXD009GLEH	●		
	ARXD012GLEH	●		
	ARXD014GLEH	●		
	ARXD018GLEH		●	
	ARXD024GLEH			●
Low static pressure duct (High efficiency)				
Medium static pressure duct				
High static pressure duct				

Type		Auto louver grille kit		
	Model name	UTD-GXSA-W	UTD-GXSB-W	UTD-GXSC-W
Low static pressure duct (Mini duct)				
Low static pressure duct (Slim duct) /Slim concealed floor	ARXD007GLEH	●		
	ARXD009GLEH	●		
	ARXD012GLEH	●		
	ARXD014GLEH	●		
	ARXD018GLEH		●	
	ARXD024GLEH			●
Low static pressure duct (High efficiency)				
Medium static pressure duct				
High static pressure duct				

■ For floor type, floor/ceiling type, and ceiling type

Type	Flange	Drain pump unit	Half concealed kit	External power supply unit
	UTD-RF204	UTR-DPB24T	UTR-STA	UTZ-GXXA UTZ-GXXC
Compact floor			●	●
Compact floor (EEV external)			●	●
Floor/Ceiling				●
Ceiling	●	●		●

Type	External connect kit				
	UTY-XWZXZ7	UTY-XWZXZB	UTY-XWZXZC	UTY-XWZXZD	UTY-XWZXZE
Compact floor	●	●	●	●	●
Compact floor (EEV external)	●	●	●	●	●
Floor/Ceiling	●	●	●	●	●
Ceiling	●	●	●	●	●

■ For wall mounted type

Type	External connect kit				
	UTY-XWZXZ7	UTY-XWZXZB	UTY-XWZXZC	UTY-XWZXZD	UTY-XWZXZE
Wall mounted	●	●	●	●	●
Wall mounted (EEV external)	●	●	●	●	●

Type	External power supply unit
	UTZ-GXXA UTZ-GXXC
Wall mounted	●
Wall mounted (EEV external)	●

■ For others

Type	External connect kit			
	UTY-XWZXZ6	UTY-XWZXZ7	UTY-XWZXZ8	UTY-XWZXZ9
Outdoor unit	●			●
Touch panel controller				
Central remote controller		●	●	

Type	External connect kit	
	UTY-XWZXZA	UTY-XWZXZF
Outdoor unit		●
Touch panel controller	●	
Central remote controller	●	

8. Optional parts installation

8-1. Drain pump unit for duct type

RELATED LINKS

"Applicable parts" on page 10-17

■ Specifications

Model name		UTZ-PX1NBA
Height of drain up	mm	Maximum 1,000
Power source		220—240 V, 50/60 Hz
Power input (230 V, 50/60 Hz)	W	12/10.8
Current (230 V, 50/60 Hz)	mA	114/92
Dimensions (H × W × D)	mm	176 × 178 × 154
Weight	kg	2.5
Connection pipe diameter		VP25 (I.D.: 25 mm, O.D.: 32 mm)
Direction of pipe connection*1		360°
Angle of pipe connection *2		0° to 90° (Horizontal to vertical)
Control method		Control board of indoor unit
Safety device		Float switch, Thermal fuse

*1: Direction of pipe connection

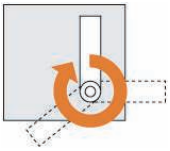

*2: Angle of pipe connection

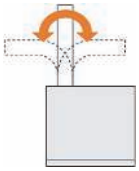

■ Installation

● Model: UTZ-PX1NBA

- **Mounting position**

Unit: mm

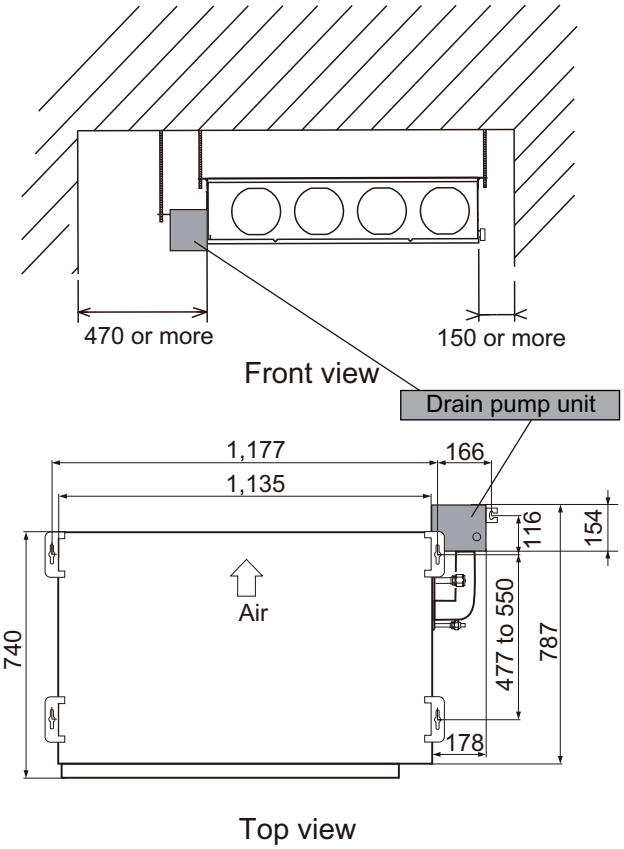

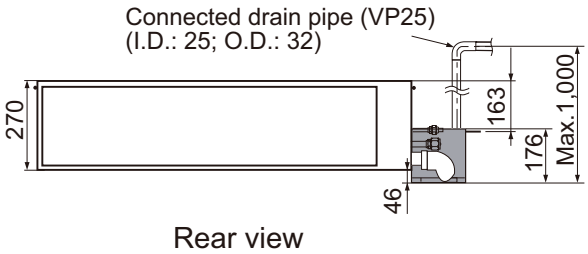

NOTES:

- Leave the space required to service the unit.
- Set a maintenance hole near the drain pump unit.

- **Installing**

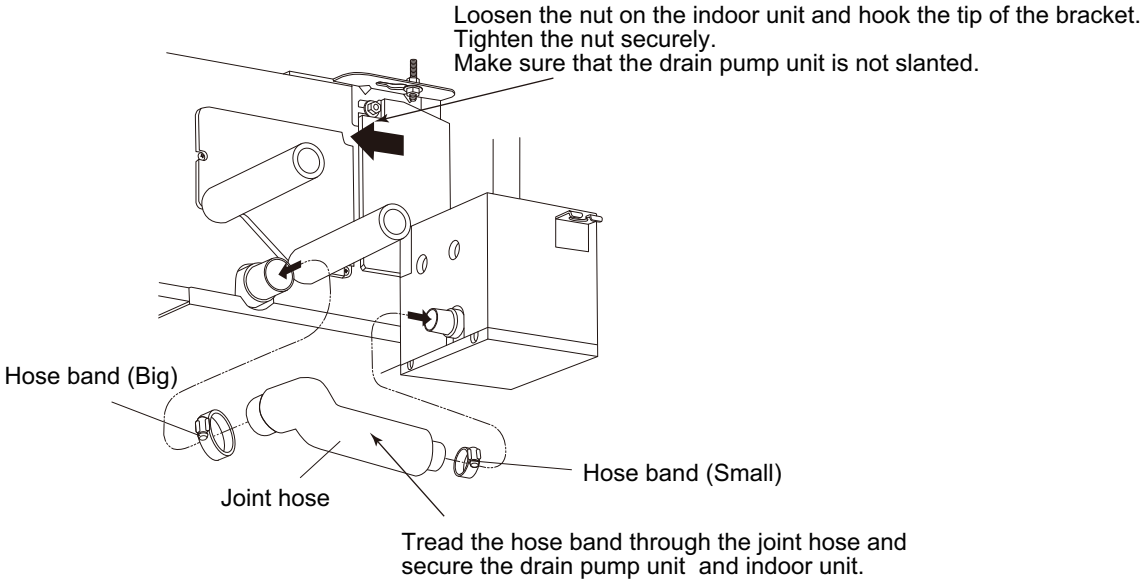

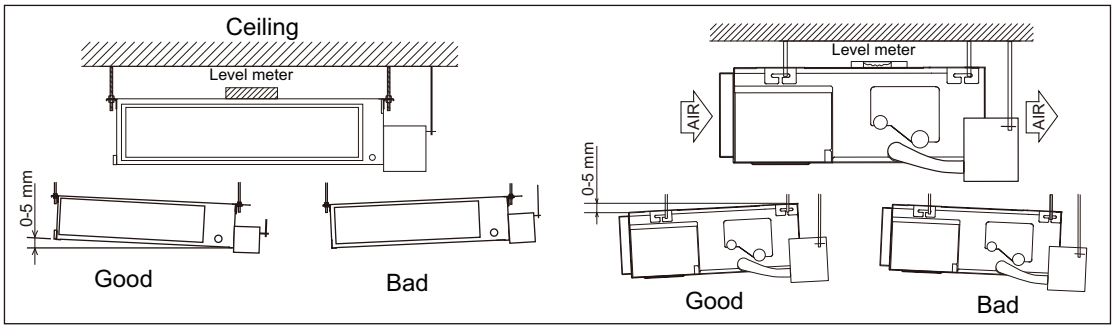

- **Installing hose**

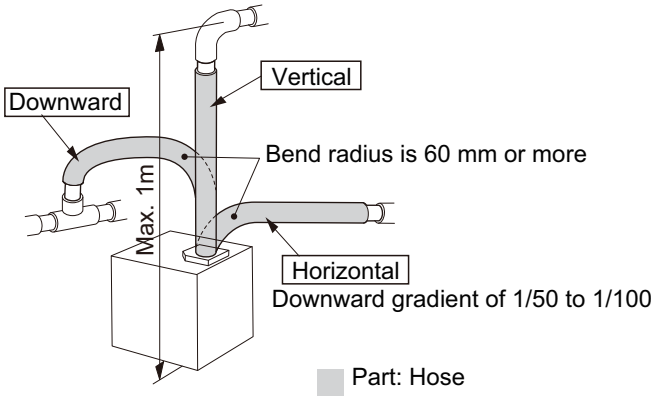

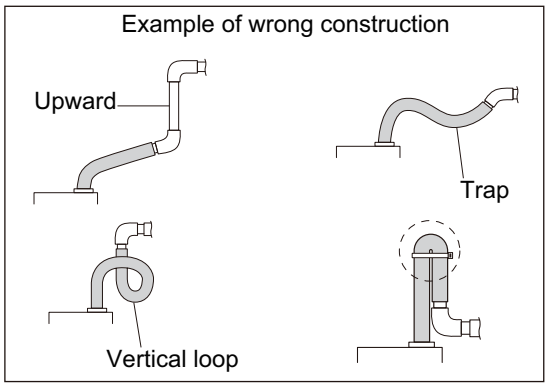

- **Installing pipe**

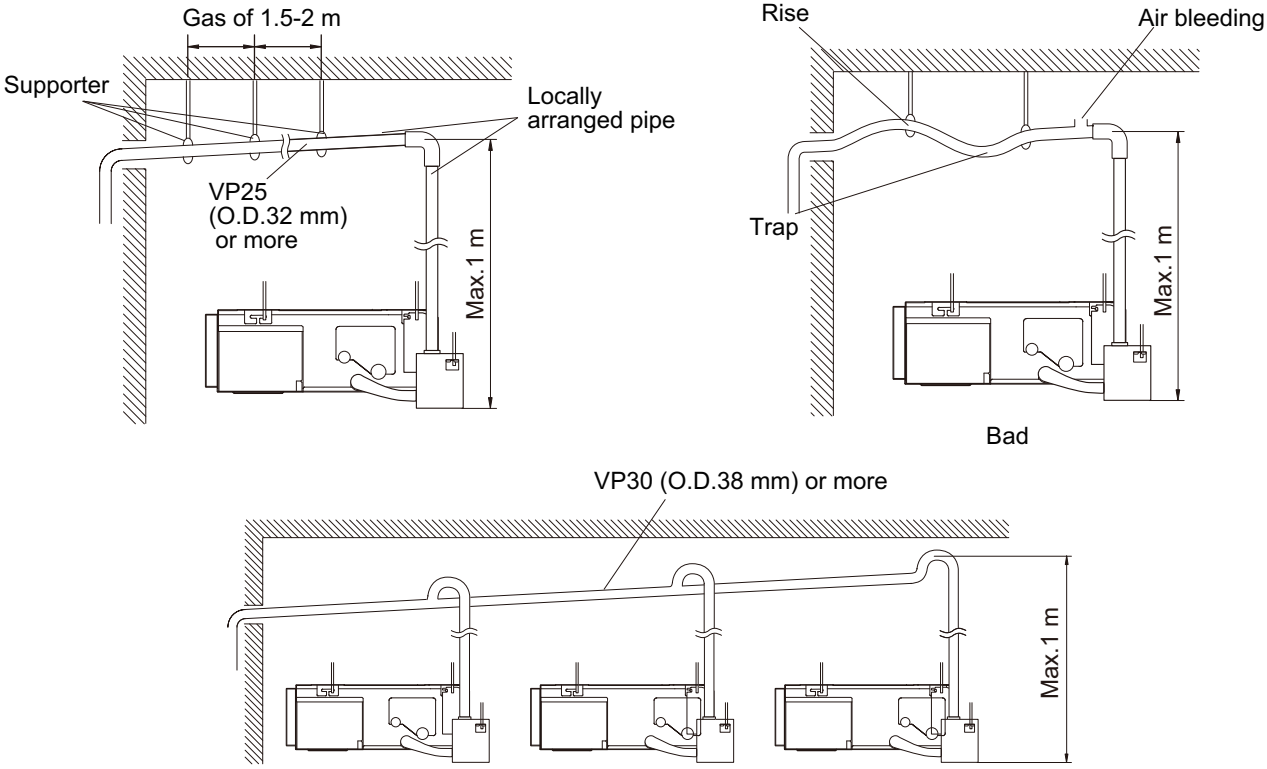

For construct centralized drain pipe fittings, refer to the electrical wiring.

■ Electrical wiring

● Model: UTZ-PX1NBA

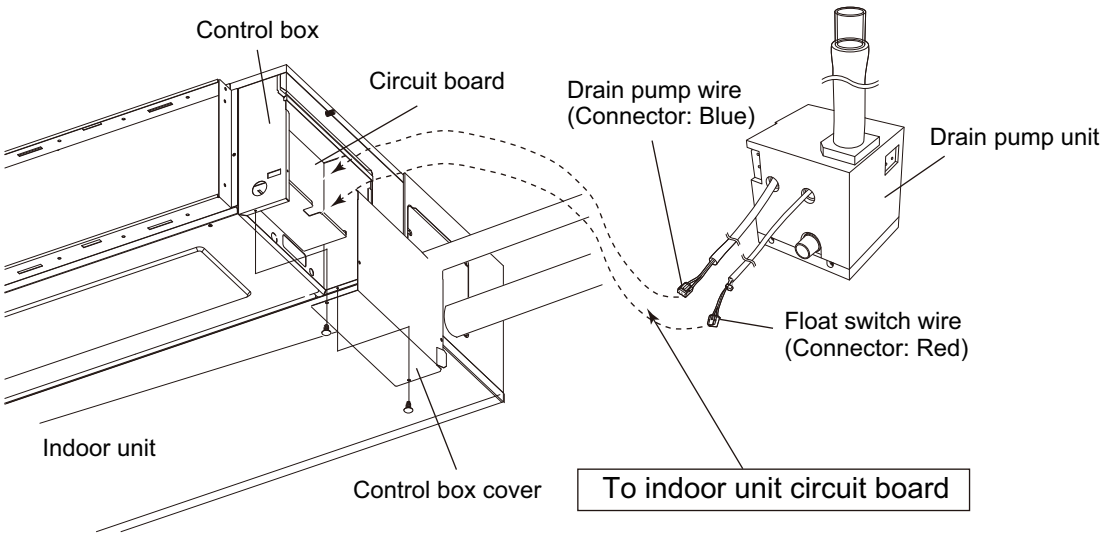

8-2. Drain pump unit for Ceiling type

RELATED LINKS

"Applicable parts" on page 10-17

■ Installing drain pump unit and electrical wiring

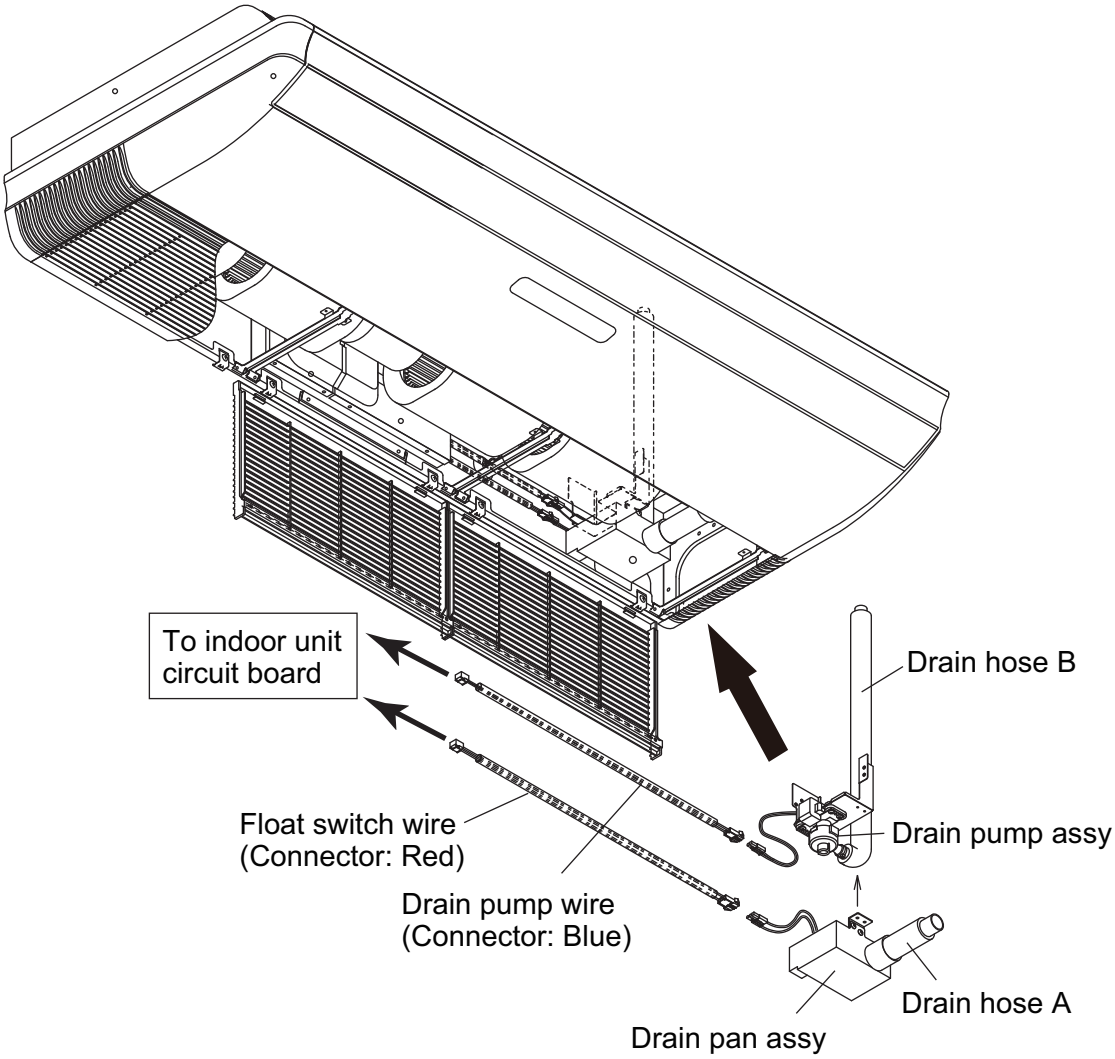

■ Installing pipe

- Set up the drain hose for a maximum rise 500 mm and give the drain pipe a downward gradient of 1/25 to 1/100.
- Install the drain pipe so there is no rise, trap, or air bleed.

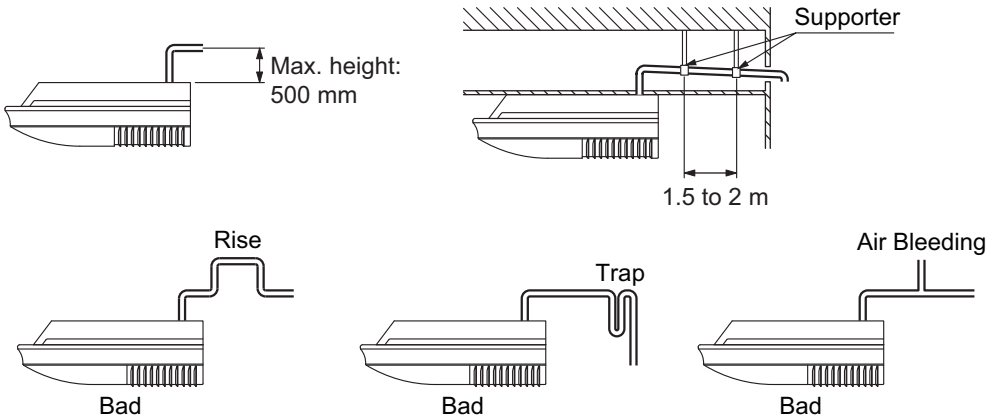

8-3. Fresh air intake kit for Compact cassette type

RELATED LINKS

"Applicable parts" on page 10-17

■ Specifications

Model name			UTZ-VXAA
Fresh air intake	Max. fresh air intake volume	% (For High)	10
Connection duct type		mm	Ø 100
		Pcs	1
Dimensions (H × W × D)	Net	mm	120 × 570 × 570
	Gross		165 × 585 × 585
Weight	Net	kg	3.5
	Gross		5.5

■ Dimensions

Unit: mm

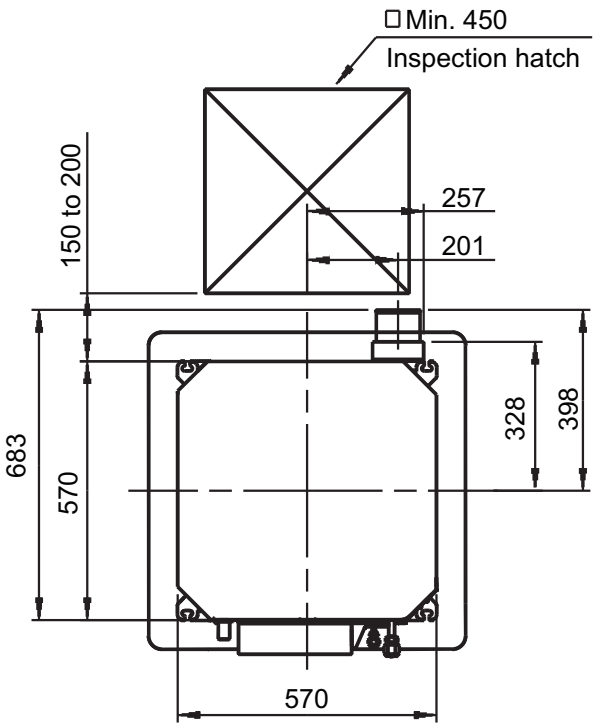

Top view

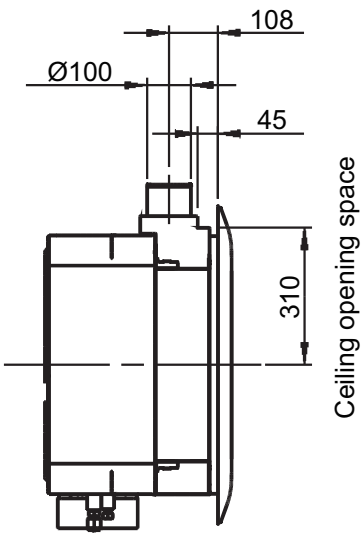

Side view

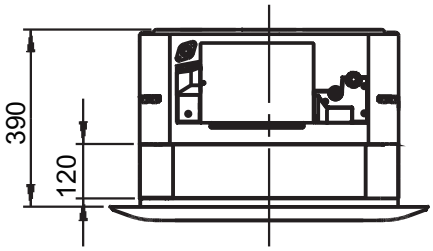

Side view

NOTE: When installing this kit, inspection hatch is necessary. (It is necessary when servicing.)

■ Airflow

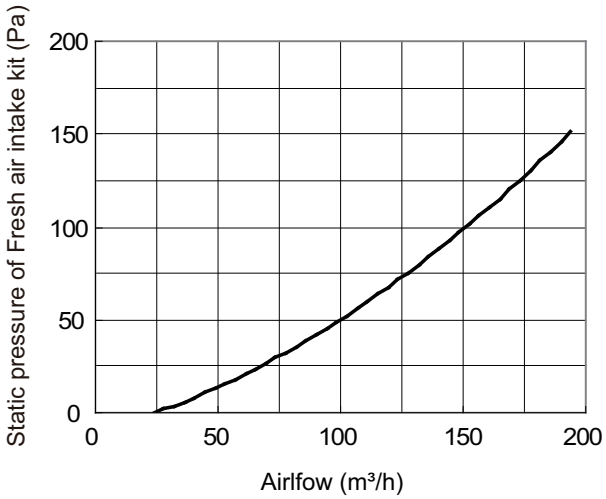

Unit: mm

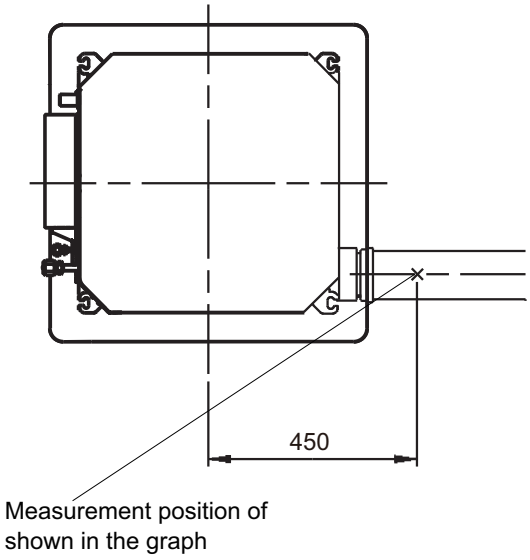

■ Fresh air control output

- You can control duct fan by synchronization with fan operation of indoor unit.
- Wire for fresh air control output is supplied with Fresh air intake kit.
- Extended length of the wire: Max. 25 m.

- **Connection diagram**

For Relay Output voltage: DC 12±2 V

Permissible current: 50 mA

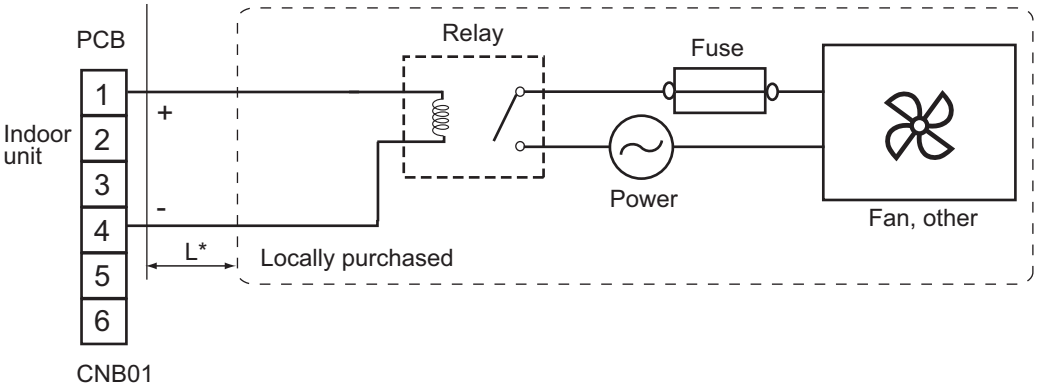

Actual number of pin might be different from the figure above.

L*: Make the distance from the PCB to the Relay unit within 25 m.

- **Operation status**

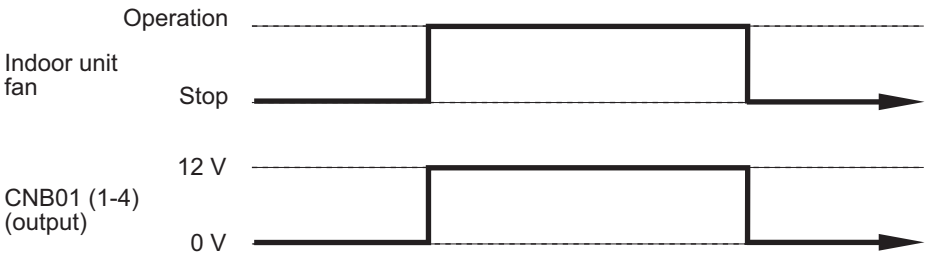

- **Wire (External output 3)**

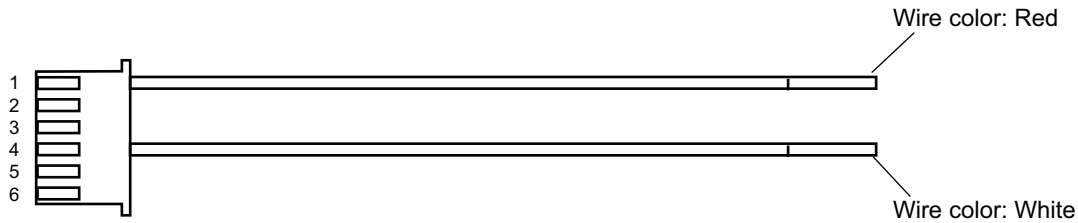

■ Accessories

Part name	Exterior	Q'ty	Part name	Exterior	Q'ty
Installation manual		1	Wire (External output 1)		1
Chamber	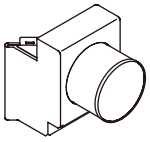	1	Wire (External output 2)		1
Wire cover	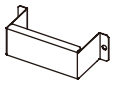	1	Wire (External output 3)		1
Screw		4	Bolt		4
Extension wire for louver	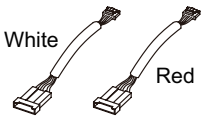	1 set	Cable tie		1
Extension wire for receiver kit (For 9-pin receiver wire)	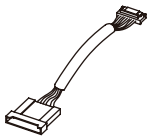	1	Extension wire for receiver kit (For 7-pin receiver wire)		1

■ Installation precautions

- **About Fresh air intake kit**
  - The Fresh air intake kit can be installed onto cassette type air conditioners.
  - The volume of ventilated air provided by the Fresh air intake kit may be unable to fulfill ventilation regulations in all countries. On such occasions we ask that this kit be used along with Energy recovery ventilators.
  - When intaking outside air, ensure correct air conditioning design as based on air conditioning load calculations. As outside air is not being processing an increase in outside air load can affect air conditioning.

- **Installation location**
  - Area that generated substances that adversely affect the equipment, such as sulfuric gas, chlorine gas, add, or alkali it will cause the copper pipes and brazed joints to corrode, which can cause refrigerant leakage.
  - Area with high salt content, such as at the seaside. It will deteriorate metal parts, causing the parts to fall or the unit to leak water.
  - Be certain to use electric dampers and shutters to avoid infiltration of cold air, wind and fog during shutdown in areas with cold climate, strong winds, or where fogs are common.
  - Ensure the product in installed a distance of at least three times the duct diameter away from exterior wall air inlets, or air exhausts for the prevention of short circuits.

- **Temperature conditions**
  - Condensation may form on the product when outside air temperature is low and the temperature and humidity surrounding the product are high. Do not intake the air of below 0 °C into the Fresh air intake kit.
  - Do not take fresh air at a temperature that exceeds the upper limit of the operation temperature range of the outdoor unit.

- **About duct fan**
  - When installing the duct fan, connect the drive relay (locally purchased) and operate with the indoor unit.
  - Ensure the intake air volume is below 10 % of the product's air volume High. When the intake air volume becomes too large there the operating noise may increase and room temperature detection may be affected.

- **About the duct connection**
  - Purchase a duct with internal diameter that fits the external diameter of the duct flange.
  - Note that regulations of some countries may require the use of a nonflammable duct.
  - If the duct penetrates a fire-retarding division or other fire-proofing measures, the installation of fire dampers, or a construction that does not adversely affect fire control measure is a regulatory requirement of some countries.
  - When using metallic ducts, ensure metals (i.e., metal lath, wire lath, stainless sheeting) are electrically insulated. (A short occurring by electrical connection can cause fire.)
  - Ensure the thermally insulate connected ducts to prevent condensation.
  - Make certain that netting or other measures are installed in parts exposed to the outside air to prevent infiltration of small animals such as birds and insects.
  - Be certain to install external air filters to parts exposed to the outside air for heat exchanger protection of indoor equipment.
  - Avoid the infiltration of rain water by installing outside ducts with an incline of at least 1/30, and fitting hoods on openings.

■ Installation

● Mounting of indoor unit

- For mounting, refer to the installation manual provided with indoor unit.
- When installing this product to existing indoor units, adjust the installation height of the indoor units to height 240 to 245 mm as shown below.

Unit: mm

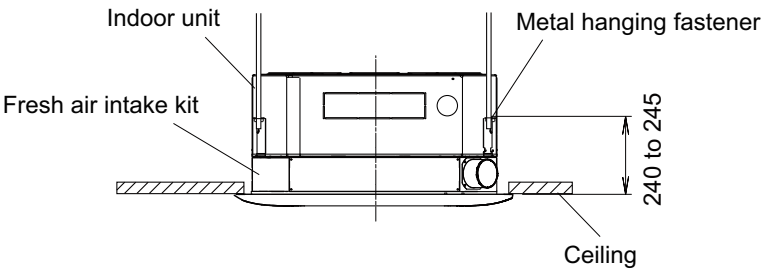

● Installation of Fresh air intake kit

⚠ CAUTION

Installing the Fresh air intake kit with wrong direction is a cause of water leakage.

1. Attach the Fresh air intake kit to the main body using the bolts provided as shown below.

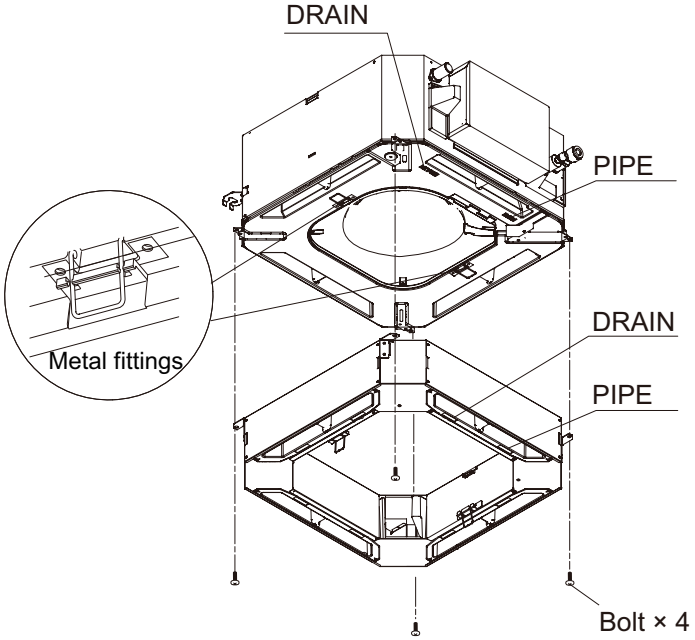

2. Install the chamber.
   Fit the four-sided holes of the chamber together with the hook fittings of the Fresh air intake kit (in two places), and secure the attached chamber in place with screws provided.

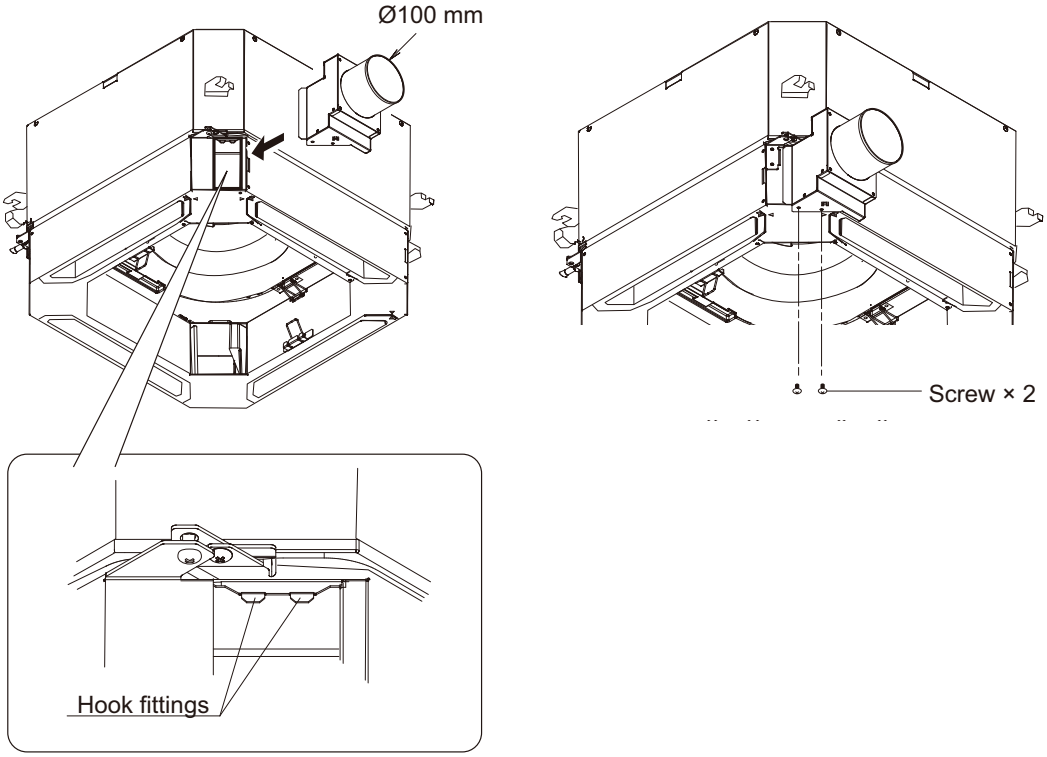

- When using the Insulation kit for high humidity (UTZ-KXGC), first cut off and remove the heat insulation as shown in the figure.
- Install the Insulation kit for high humidity according to the installation instruction sheet provided.

Unit: mm

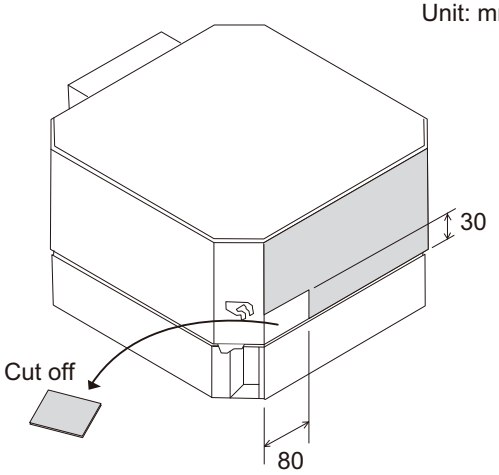

3. Install the duct.
   Fasten the connecting parts of the ducts with band, and wrap with vinyl tape to ensure no air leaks. (Carry out the work to ensure no air leakage at a pressure of 200 Pa.)

NOTE: Do not construct the duct in the manner of below.
- Extreme bends
- Highly repetitive bends
- Making the connecting duct diameters smaller

Completion figure

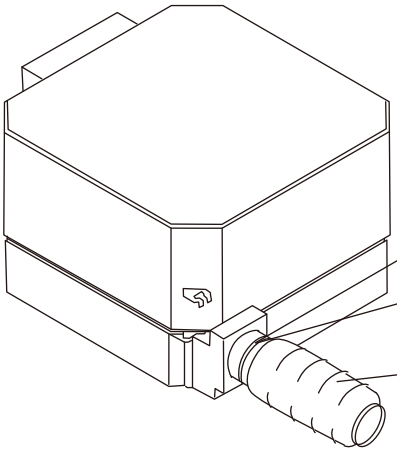

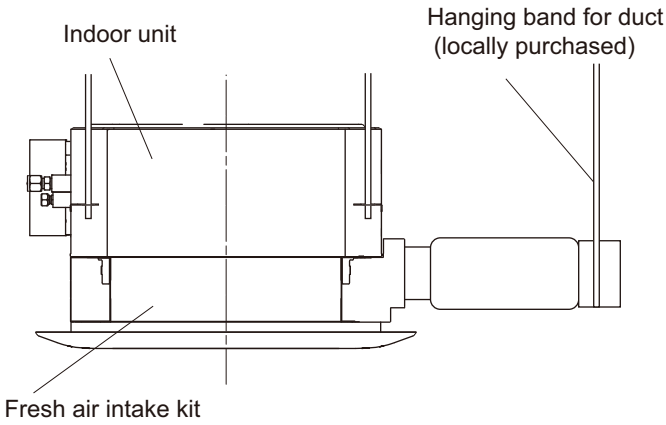

NOTE: When wiring of the duct fan is required, refer to "Fresh air control output" on page 10-30.

● Installation of Cassette grille

1. Connect extension wire for use with louvers, or extension wire for optical receiver after provisional attaching of the decoration panel.
2. Tie the wires together with the fasteners provided and insert into the hole of the Fresh air intake kit.
3. Install the wire-cover provided on the Fresh air intake kit.
4. Install decoration panel according to the installation instruction sheet provided.

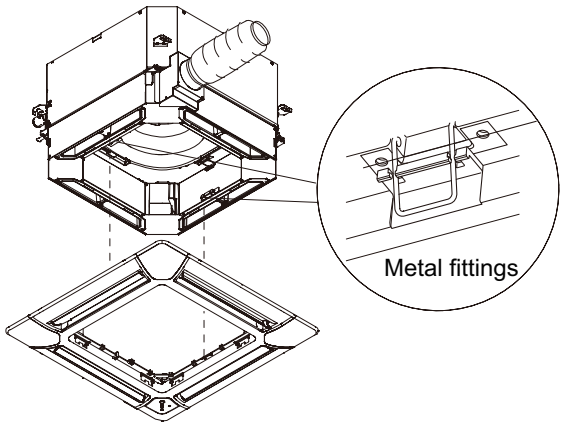

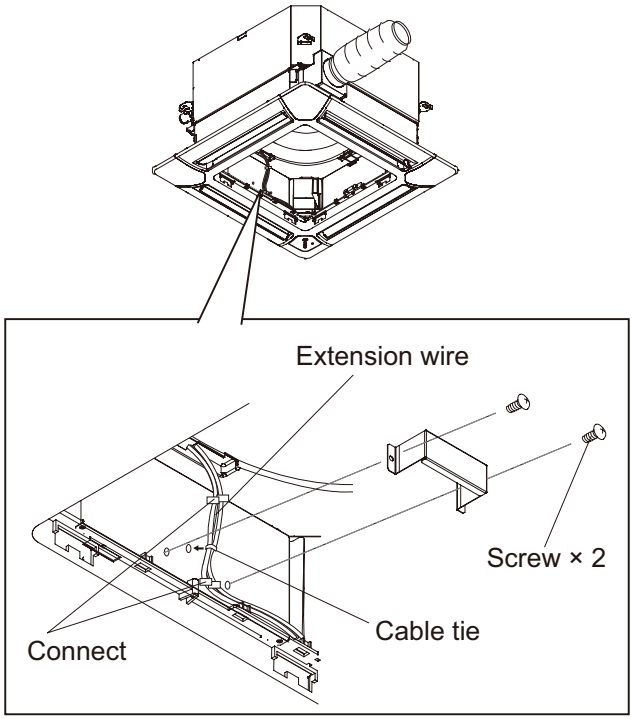

■ Installation example

- **Standard**

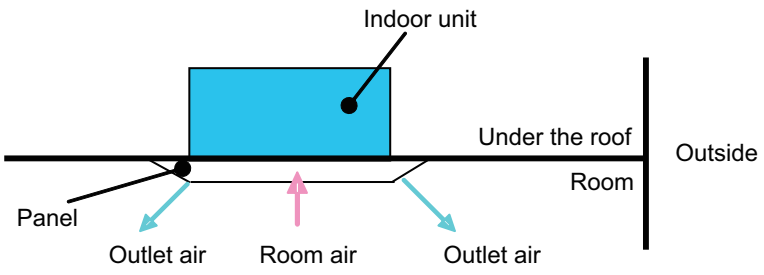

- **Case 1: Intake by fan of indoor unit**

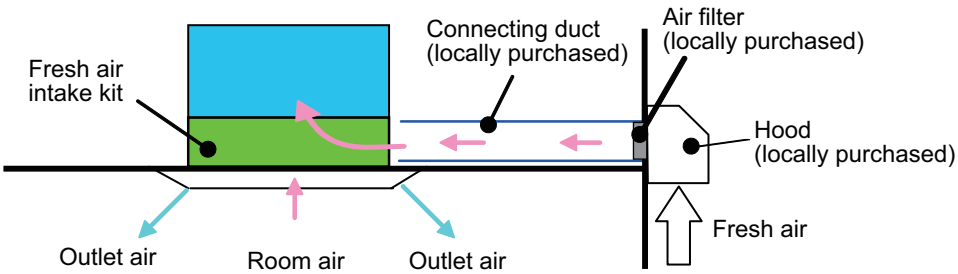

- **Case 2: Intake by duct fan**

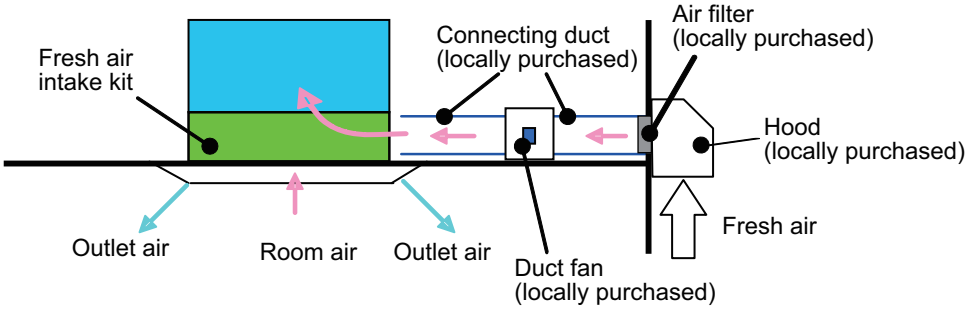

8-4. Fresh air intake kit for Circular flow cassette type and 4-way flow cassette type

RELATED LINKS

"Applicable parts" on page 10-17

■ Specifications

Model name				UTZ-VXRA	UTZ-VXGA
Fresh air intake	Max. fresh air intake volume	2-way intake	% (For High)	10	
		1-way intake		5	
Connection duct type			mm	Ø100	
			Pcs	2	
Dimensions (H × W × D)		Net	mm	120 × 840 × 840	
		Gross		165 × 860 × 860	
Weight		Net	kg	6.0	5.5
		Gross		9.5	9.0

■ Dimensions

Unit: mm

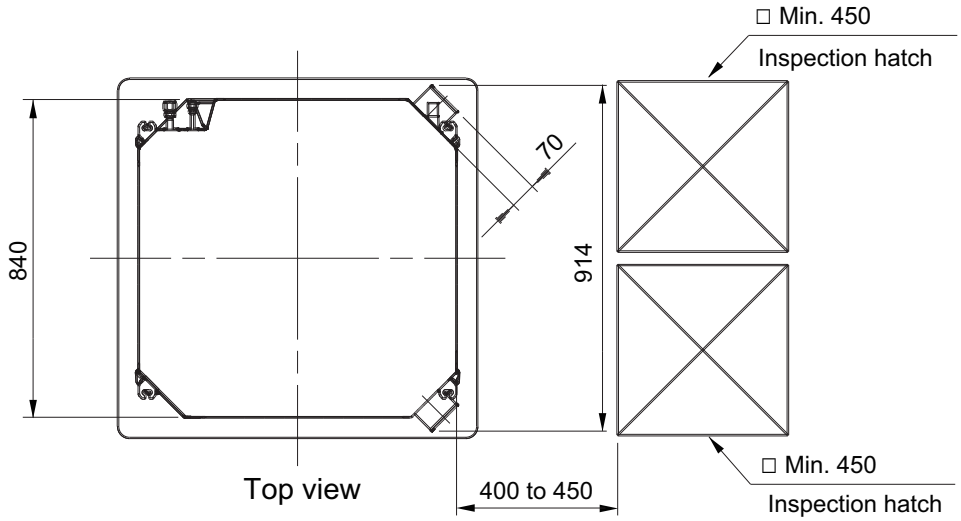

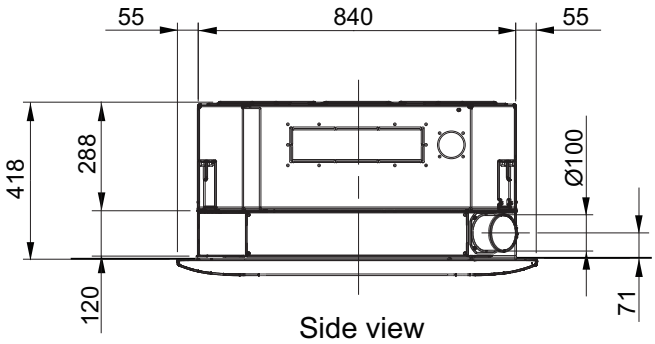

NOTE: When installing this kit, inspection hatch is necessary. (It is necessary when servicing.) Either one of inspection hatches must be installed.

■ Airflow

Unit: mm

For 2-way intake

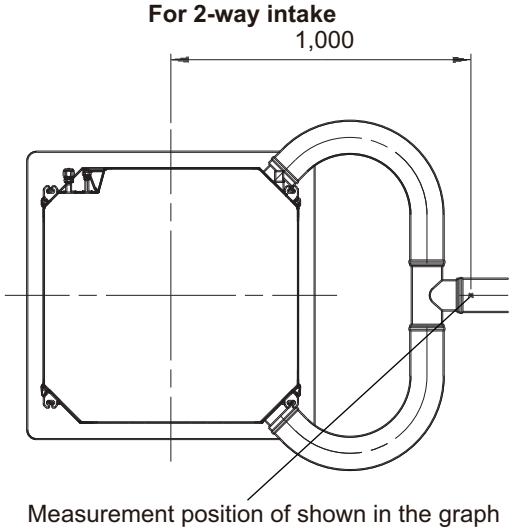

For 1-way intake

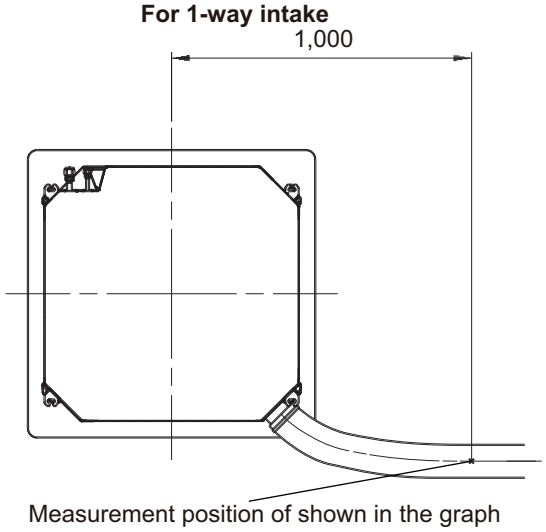

■ Fresh air control output

- You can control duct fan by synchronization with fan operation of indoor unit.
- Wire for fresh air control output is supplied with Fresh air intake kit.
- Extended length of the wire: Max. 25 m.

- **Connection diagram**

For Relay Output voltage: DC 12±2 V

Permissible current: 50 mA

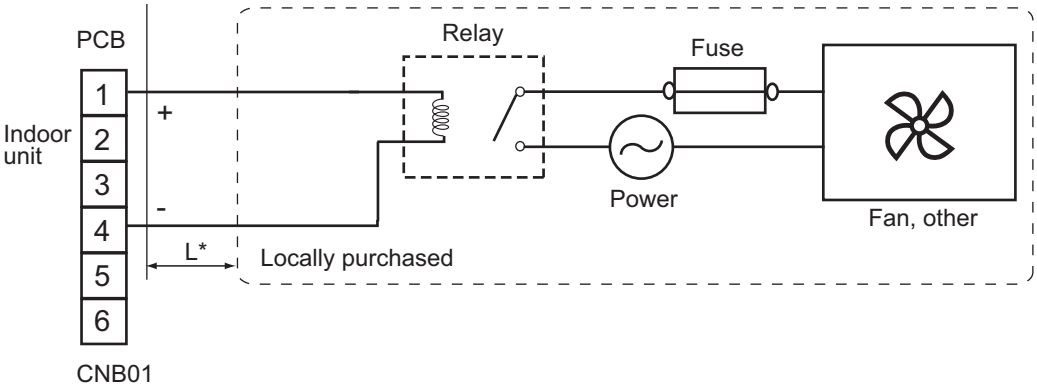

Actual number of pin might be different from the figure above.

L*: Make the distance from the PCB to the Relay unit within 25 m.

- **Operation status**

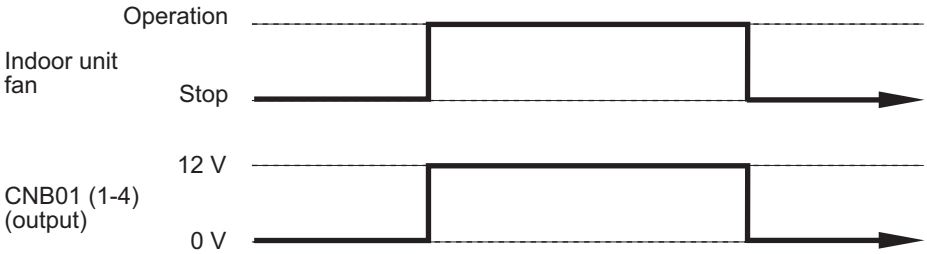

- **Wire (External output 3)**

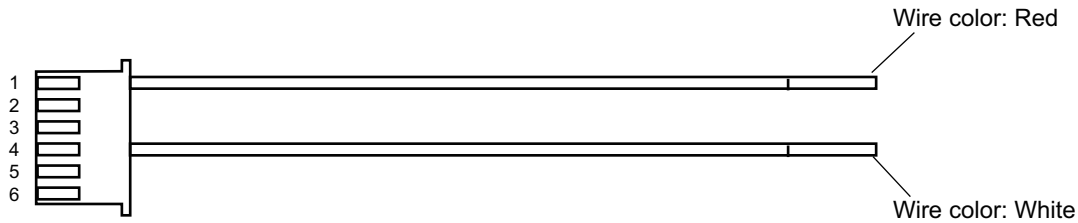

■ Accessories

● UTZ-VXRA

Part name	Exterior	Q'ty	Part name	Exterior	Q'ty
Installation manual		1	Insulation 2		1
Duct flange		2	Insulation 3		3
Cover		2	Insulation 4		4
Screw		16	Wire (External output 1) (For Single split or Multi system)		1
Hook plate		2 set	Wire (External output 3)		1
Shutter plate		1	Bolt		4
Insulation 1		2			

● UTZ-VXGA

Part name	Exterior	Q'ty	Part name	Exterior	Q'ty
Installation manual		1	Insulation 4		4
Duct flange		2	Cable tie		1
Cover		2	Extension wire for louver	White Red	1 set
Screw		16	Extension wire for receiver kit		1
Hook plate	1 2	2 set	Wire (External output 1)		1
Shutter plate		1	Wire (External output 2)		1
Insulation 1		2	Wire (External output 3)		1
Insulation 2		1	Bolt		4
Insulation 3		3			

■ Installation precautions

- **About Fresh air intake kit**
  - The Fresh air intake kit can be installed onto cassette type air conditioners.
  - The volume of ventilated air provided by the Fresh air intake kit may be unable to fulfill ventilation regulations in all countries. On such occasions we ask that this kit be used along with Energy recovery ventilators.
  - When intaking outside air, ensure correct air conditioning design as based on air conditioning load calculations. As outside air is not being processing an increase in outside air load can affect air conditioning.

- **Installation location**
  - Area that generated substances that adversely affect the equipment, such as sulfuric gas, chlorine gas, add, or alkali it will cause the copper pipes and brazed joints to corrode, which can cause refrigerant leakage.
  - Area with high salt content, such as at the seaside. It will deteriorate metal parts, causing the parts to fall or the unit to leak water.
  - Be certain to use electric dampers and shutters to avoid infiltration of cold air, wind and fog during shutdown in areas with cold climate, strong winds, or where fogs are common.
  - Ensure the product in installed a distance of at least three times the duct diameter away from exterior wall air inlets, or air exhausts for the prevention of short circuits.

- **Temperature conditions**
  - Condensation may form on the product when outside air temperature is low and the temperature and humidity surrounding the product are high. Do not intake the air of below 0 °C into the Fresh air intake kit.
  - Do not take fresh air at a temperature that exceeds the upper limit of the operation temperature range of the outdoor unit.

- **About duct fan**
  - When installing the duct fan, connect the drive relay (locally purchased) and operate with the indoor unit.
  - Ensure the intake air volume is below 10 % of the product's air volume High. When the intake air volume becomes too large there the operating noise may increase and room temperature detection may be affected.

- **About the duct connection**
  - Purchase a duct with internal diameter that fits the external diameter of the duct flange.
  - Note that regulations of some countries may require the use of a nonflammable duct.
  - If the duct penetrates a fire-retarding division or other fire-proofing measures, the installation of fire dampers, or a construction that does not adversely affect fire control measure is a regulatory requirement of some countries.
  - When using metallic ducts, ensure metals (i.e., metal lath, wire lath, stainless sheeting) are electrically insulated. (A short occurring by electrical connection can cause fire.)
  - Ensure the thermally insulate connected ducts to prevent condensation.
  - Make certain that netting or other measures are installed in parts exposed to the outside air to prevent infiltration of small animals such as birds and insects.
  - Be certain to install external air filters to parts exposed to the outside air for heat exchanger protection of indoor equipment.
  - Avoid the infiltration of rain water by installing outside ducts with an incline of at least 1/30, and fitting hoods on openings.

■ Installation

● Mounting of indoor unit

- For mounting, refer to the installation manual provided with indoor unit.
- When installing this product to existing indoor units, adjust the installation height of the indoor units to height 260 to 265 mm as shown below.

Unit: mm

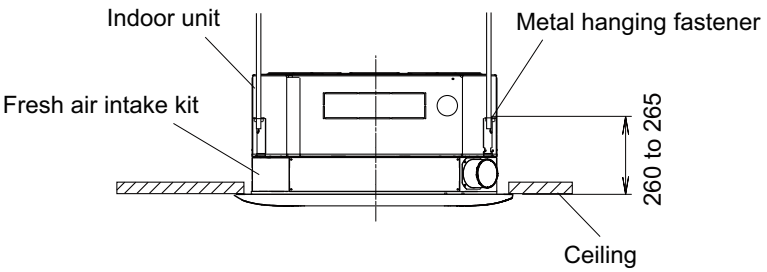

● Pre-installation preparations

- Attach the duct flange provided with screws.
- The Fresh air intake kit can be used an external air intake on just one side. Use included sealed plate to apply for different eye holes.
- Apply insulation 1 to the installed duct flange parts (Do not apply to sealed areas).

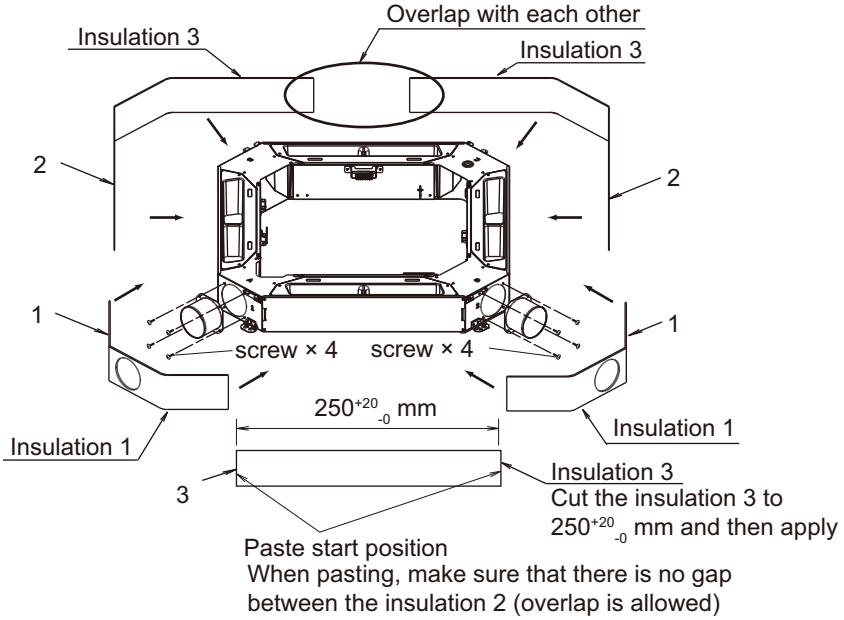

When taking in the air in one side, paste the insulation in the order as shown below.

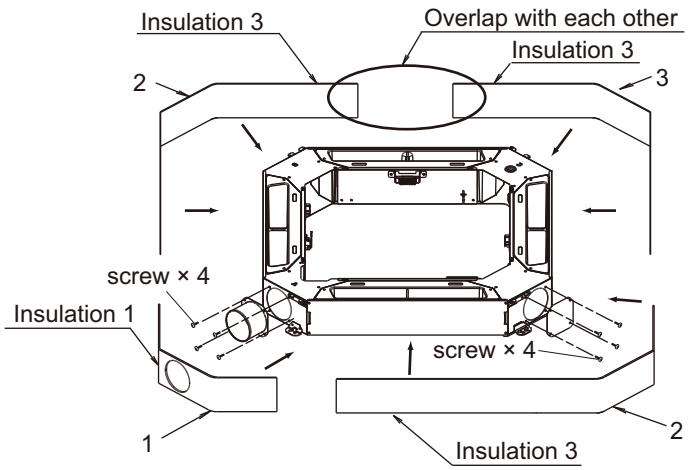

● Installation of Fresh air intake kit

1. Attach the Fresh air intake kit to the main body using the bolts provided.

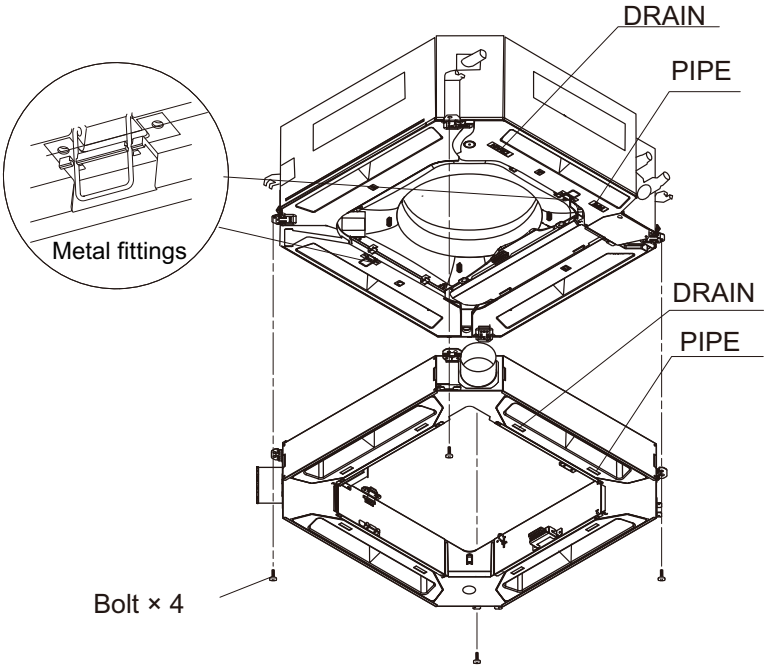

2. Attach the Hook plate by each corner of the Fresh air intake kit. (The attaching screws are attached to the body of the Fresh air intake kit and must be loosened before installing.)

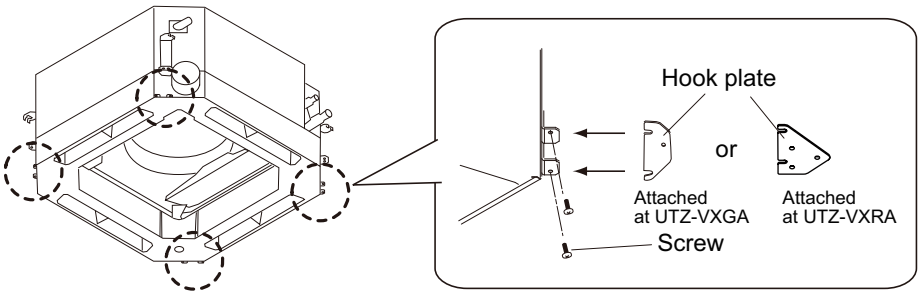

3. Install the cover.
   a. Remover the drain cover attached to the decorative panel and install onto the Fresh air intake kit.

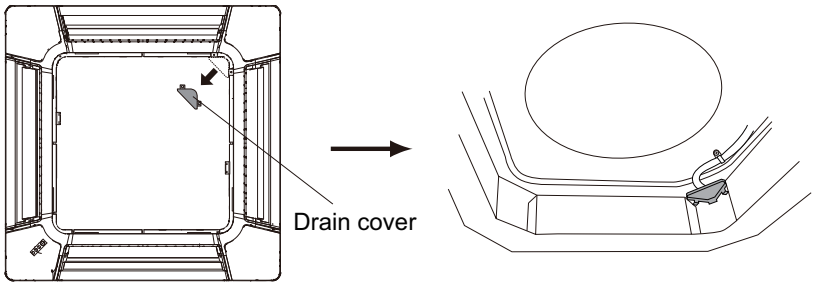

   b. Set the cover in position with screws (2 places) as shown below. Apply the Insulation 4 after installing the cover.

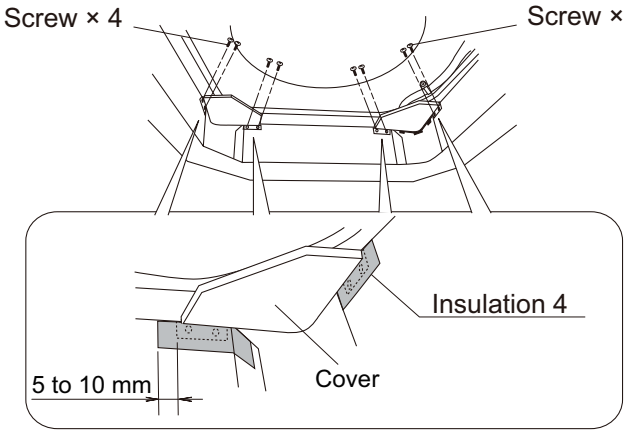

4. Install the duct.
   a. Fasten the connecting parts of the ducts with bands, and wrap with vinyl tape to ensure no air leaks. (Carry out the work to ensure no air leakage at a pressure of 200 Pa.)

      NOTE: Do not construct the duct in the manner of below.
      - Extreme bends
      - Highly repetitive bends
      - Making the connecting duct diameters smaller

   b. When using T-shaped pipe, suspend the kit with suspension bands for duct-use to avoid unnecessary load bearing.

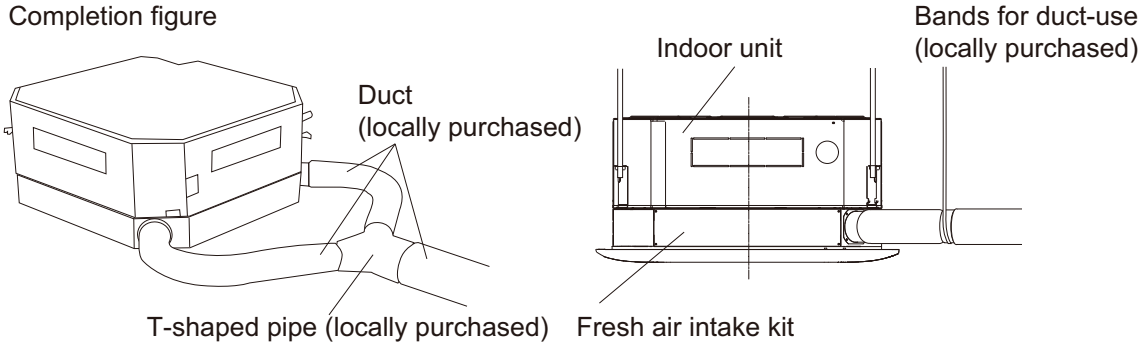

NOTE: When wiring of the duct fan is required, refer to "Fresh air control output" on page 10-40.

● Installation of Cassette grille

Pre-installation preparations:

1. Remove the control box cover.
2. Remove the connector from the existing temperature sensor on the circuit board of the indoor unit.

4-way flow cassette type

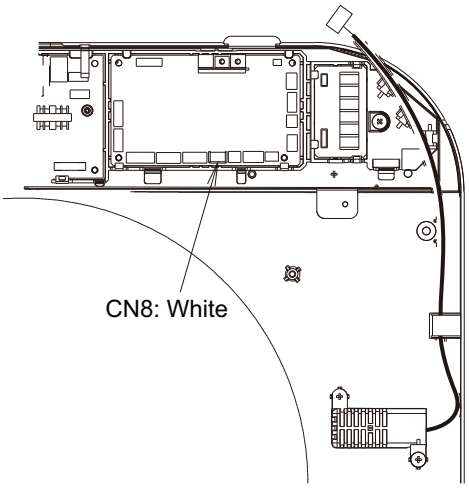

Circular flow cassette type

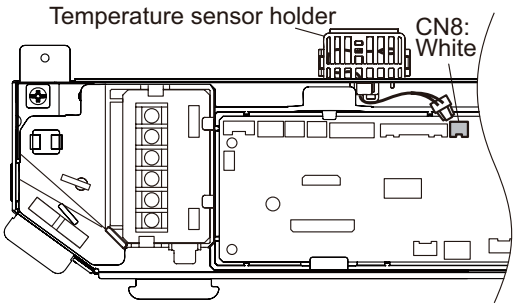

3. The existing temperature sensor will not be used so remove it from the sensor holder, and once more install the empty sensor holder (without sensor) in the control box.

⚠ CAUTION

Make sure to install the sensor holder inside the control box, as it is a fire hazard. Otherwise, it may cause fire.

4-way flow cassette type

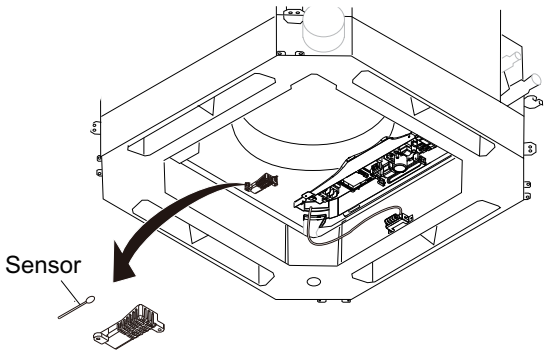

Circular flow cassette type

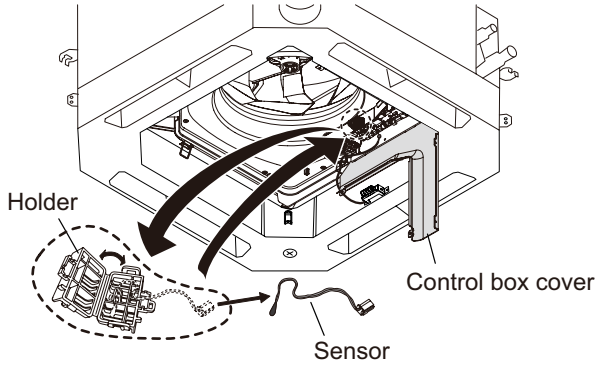

4. Insert the connector of the sensor attached to the Fresh air intake kit onto the substrate board of the indoor unit.

4-way flow cassette type

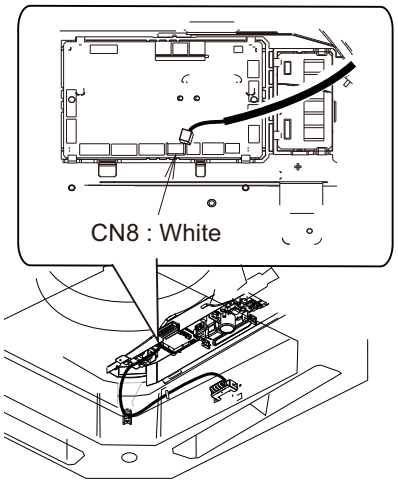

Circular flow cassette type

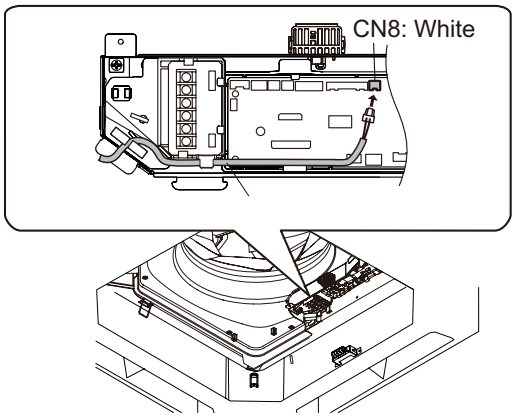

5. Insert the included extension cable for use with louver to the connector.
6. When using the optical receiver unit (option), insert the included extension wire to the indoor unit.
7. Close the control box cover when work is complete.

Installation procedure:

1. After provisional fixing of a cassette grille, feed the louver extension wire (and optical receiver extension wire) through the penetrating hole.
2. Connect to the connection wires coming out of the cassette grille.

3. Install cassette grille panel according to the installation instruction sheet provided.

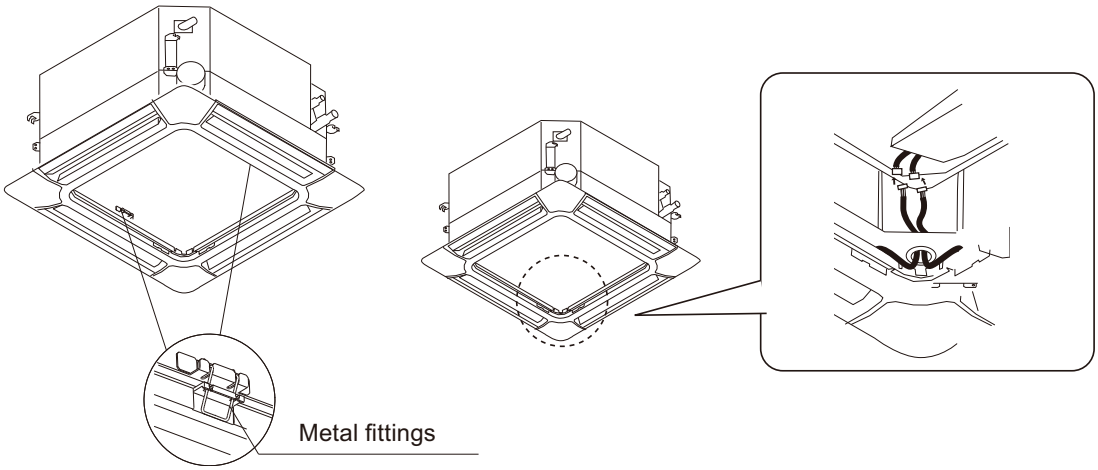

■ Installation example

- **Standard**

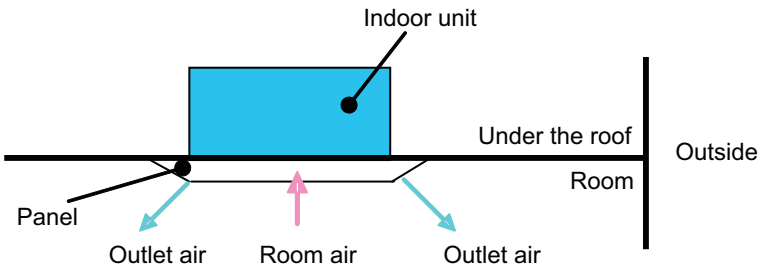

- **Case 1: Intake by fan of indoor unit**

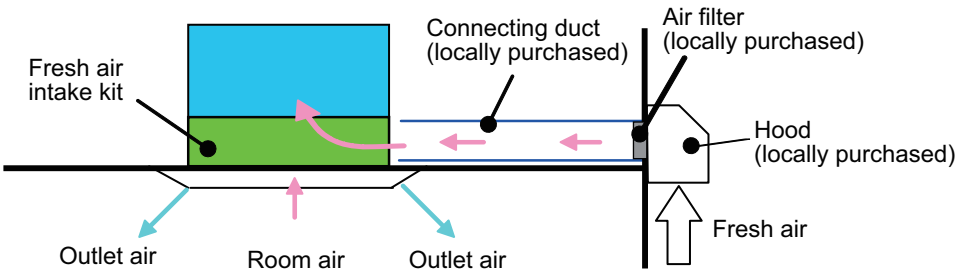

- **Case 2: Intake by duct fan**

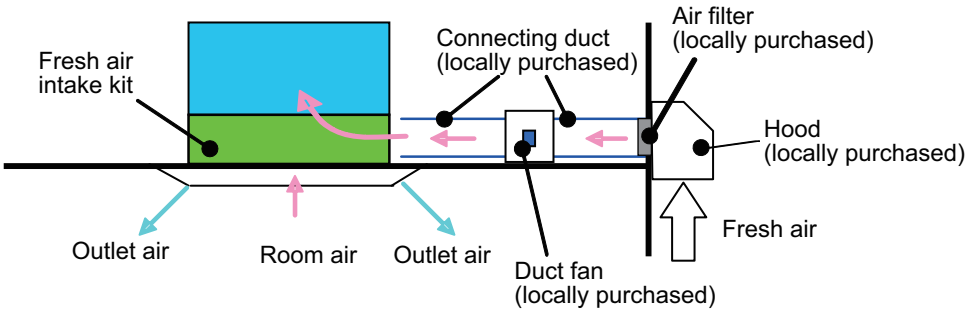

8-5. Auto louver grille kit

RELATED LINKS

"Applicable parts" on page 10-17

■ Specifications

Model name			UTD-GXSA-W UTD-GXTA-W	UTD-GXSB-W UTD-GXTB-W	UTD-GXSC-W UTD-GXTC-W
Power supply			Connecting with Control box of indoor unit		
Fixing of Auto louver grille			Screw fixing to flange or rectangular duct		
Extension square duct limit			1.0 m (Max. duct length between indoor unit and grille)		
Dimensions (H × W × D)	Net	mm	180 × 683 × (84+9)	180 × 883 × (84+9)	180 × 1,083 × (84+9)
Weight	Net	kg	2.0	2.5	3.0
	Gross		3.0	3.5	4.0
Color			White		
Louver motor			Stepping motor		
Material			Flame retardant ABS		
Accessories			Fitting flame, etc.		
Operation range	Cooling	°C	18 to 32		
		%RH	80 % or less		
	Heating	°C	16 to 30		

■ Dimension

● Models: UTD-GXSA-W and UTD-GXTA-W

Unit: mm

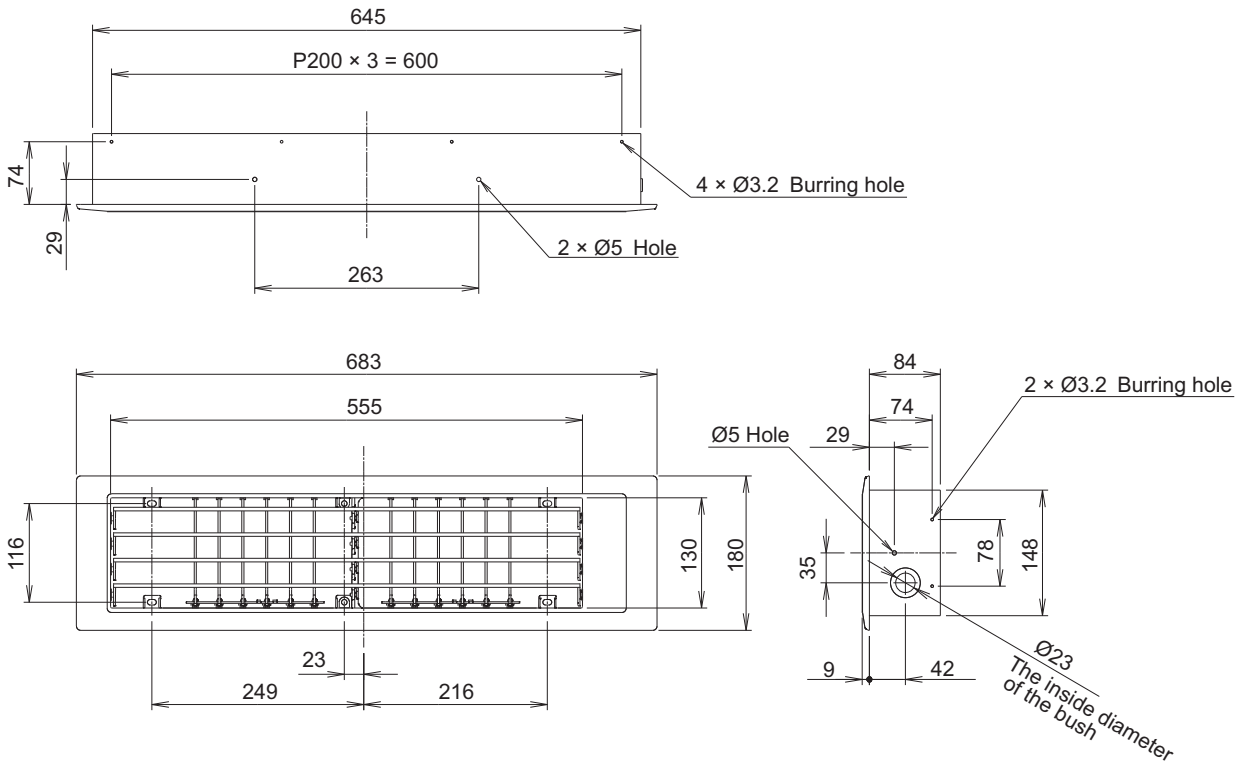

● Models: UTD-GXSB-W and UTD-GXTB-W

Unit: mm

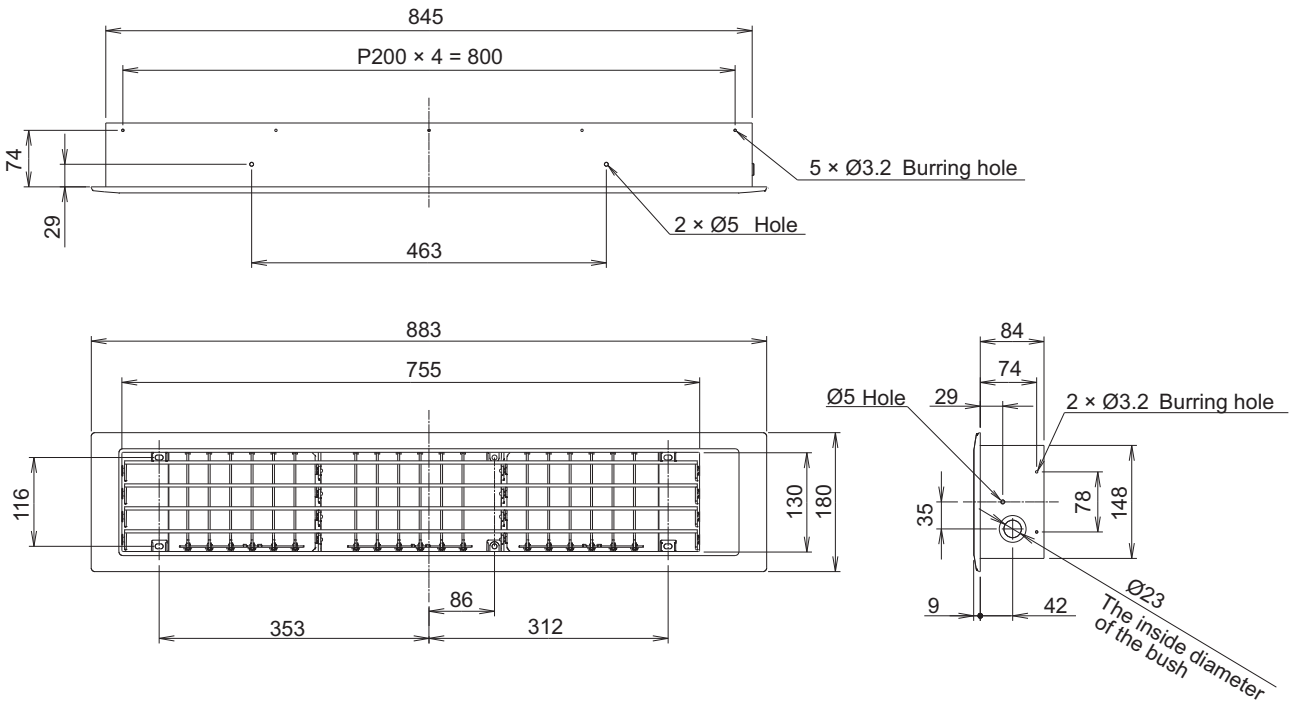

● Models: UTD-GXSC-W and UTD-GXTC-W

Unit: mm

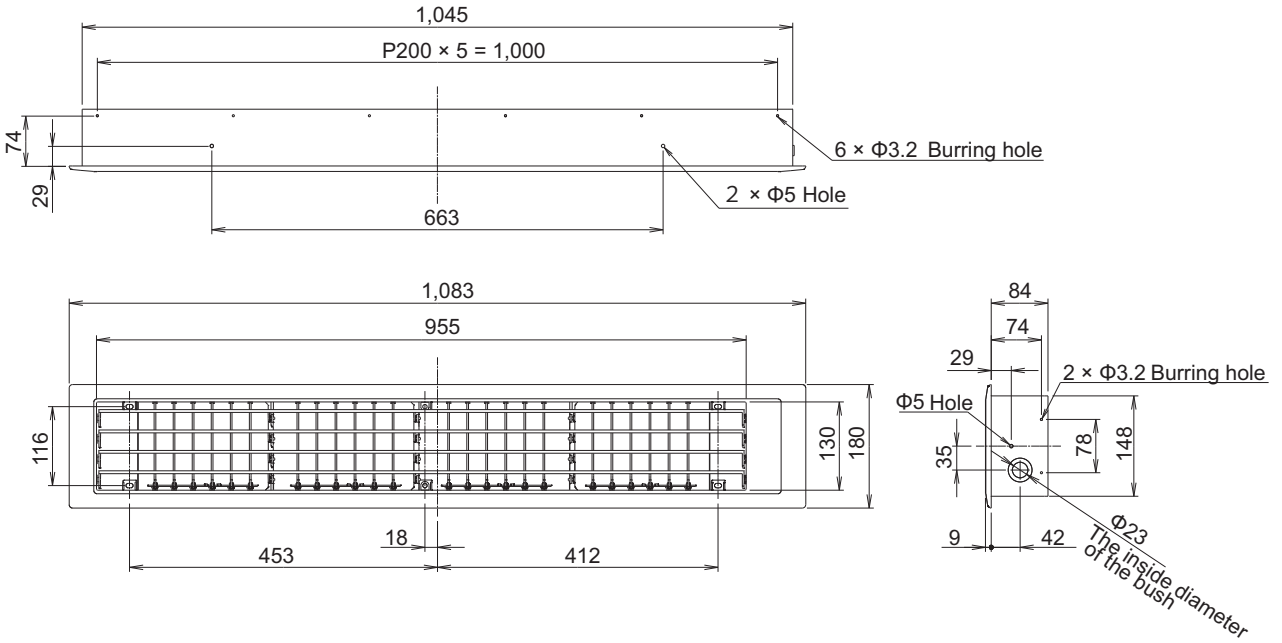

■ Accessories

Part name	Exterior	Q'ty	Part name	Exterior	Q'ty
Installation manual		1	Screw A	10 mm	16
Operating manual		1	Screw B	10 mm	6
Grille		1	Cable clip		2
Bracket frame		1	Cable tie		3
Bushing		1			

■ Installation precautions

- Select the installation location that meets the following requirement and that is approved by the customer.
  - Cool and warm air should reach the entire room.

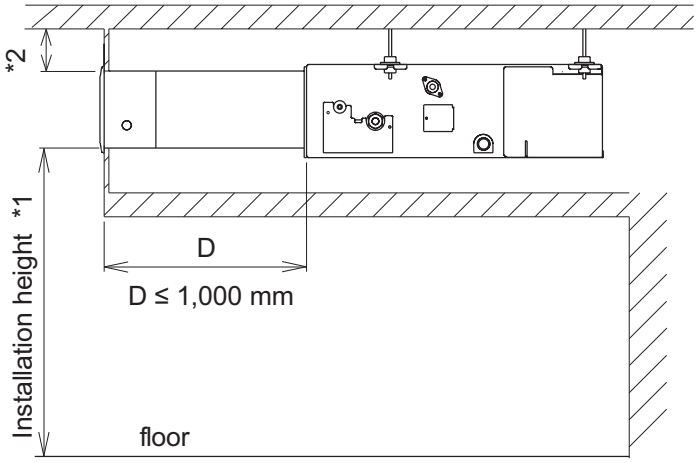

NOTE:
- *1: For air velocity and air temperature distribution during heating, refer to "Air velocity and temperature distributions" in Chapter 4. INDOOR UNITS on page 04-95.
- *2: If the distance from the ceiling is not adequate, it may cause mildew stains on the wall or ceiling. Install at least 150 mm away from any surface.

- Do not install the unit in the following areas.
  - The upper part of the vicinity of room entrance
    It may cause condensation on the outlet port.
  - Near a wall surface
    It may cause condensation on the wall during cooling.
  - Area filled with mineral oil or containing a large amount of splashed oil or steam, such as kitchen.
  - The place where it will be exposed to direct sunlight.
    It may cause change in color.

- When the installation area is exposed direct sunlight, take measure to block the light such as covering the grille surface with a sheet. Otherwise, it may cause a change in color.

- Use an appropriate grille that is compatible with the indoor unit. If not used with the correct combination, it may cause condensation.

- Perform heat insulation and field setting according to the Installation manual of indoor unit. Not installing as per the instructions may cause condensation.

8-6. External power supply unit (UTZ-GXXA)

RELATED LINKS

"Applicable parts" on page 10-17

■ Specifications

Model name			UTZ-GXXA
Power supply		V	1 Ø AC 24
Power source frequency		Hz	50/60
Maximum operating current		A	1.13
Maximum power consumption		W	21
Temperature	Operating	°C	0 to 46
	Packaged	°C	-10 to 60
Humidity	Packaged	%	0 to 95 (RH) No condensation
Dimensions (H × W × D)		mm	65 × 203 × 178
Weight		g	500

■ Dimensions

This product is comprised of a body and cover.

Unit: mm

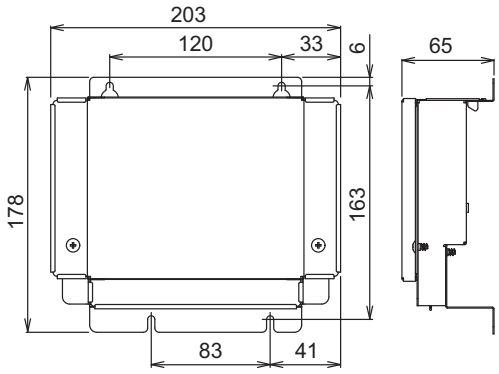

■ Wiring diagram

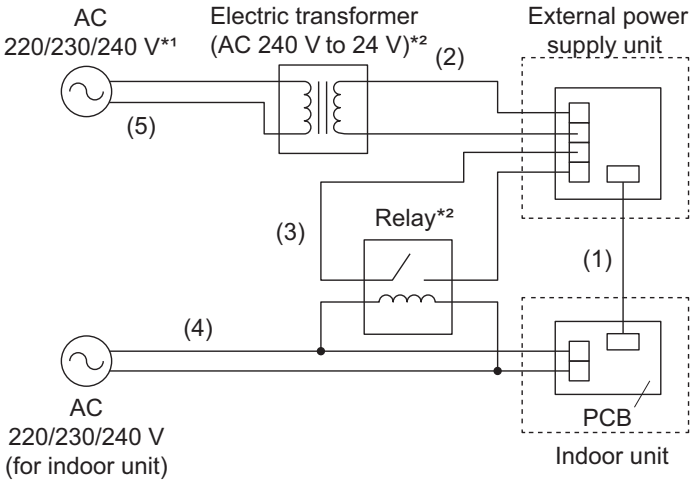

NOTES:

- *1: A dedicated power supply that is not shut off even if turned off the indoor units.
- *2: Locally purchased.

(1) Connect the external power supply unit and the PCB of the indoor unit with the provided connecting cable. (Depending on the model of the indoor unit, the adapter cable is also used.)

(2) Connect AC 24 V (±20%) power to the terminal of the external power supply unit.

(3) Connect the contact side of the relay (with the normally closed contact) to external power supply unit.

(4) Connect the inner and relay power lines to the circuit breaker.

(5) Connect the power line of the power transformer primary side to the circuit breaker.

■ Electrical requirement

The following items are necessary to install this product. (These items are not included with this product and must be purchased separately.)

Name	Q'ty	Description
Relay	1	Primary side voltage: AC 220 to 240 V. Secondary side rated current: 3 A or more. Normally Closed contact. IEC61810-1 or 60335-1 Reinforced insulation between primary side and secondary side
Electric transformer	1	AC 24 V ±15% UL Class II

NOTE: When connecting multiple units, do not exceed the capacity of the transformer.

■ Accessories

Part name	Exterior	Q'ty	Part name	Exterior	Q'ty
Installation manual		1	Adapter cable		1*1
External power supply unit		1	Cable clamp		1*1
Tapping screw		4	Cable tie (large)		3
Connecting cable (5 m)		1	Cable tie (small)		1
EMI core		1*2			

NOTES:

- *1: It is used to connect to the following indoor unit type.
  - Circular flow cassette type
  - 3D flow cassette type
  - Compact floor type and Compact floor (EEV external) type
- *2: It is used to connect to the following indoor unit type.
  - Floor/Ceiling type

■ Installation precautions

This product can be installed in the following direction.

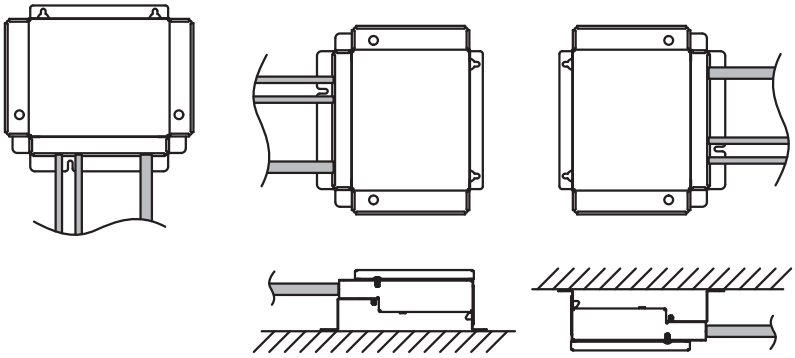

Prohibited

To prevent water from entering through the cable,
do not install this product in the direction shown in the following figure.

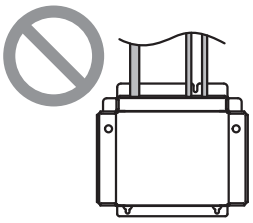

8-7. External power supply unit (UTZ-GXXC)

RELATED LINKS

"Applicable parts" on page 10-17

■ Specifications

Model name			UTZ-GXXC
Power supply		V	1 Ø AC 24
Indoor unit power supply detection		V	1 Ø AC 220—240
Power source frequency		Hz	50/60
Maximum operating current		A	1.13
Maximum power consumption		W	21
Temperature	Operating	°C	0 to 46
	Packaged	°C	-10 to 60
Humidity	Packaged	%	0 to 95 (RH) No condensation
Dimensions (H × W × D)		mm	97 × 200 × 178
Weight		g	800

■ Dimensions

This product is comprised of a body and cover.

Unit: mm

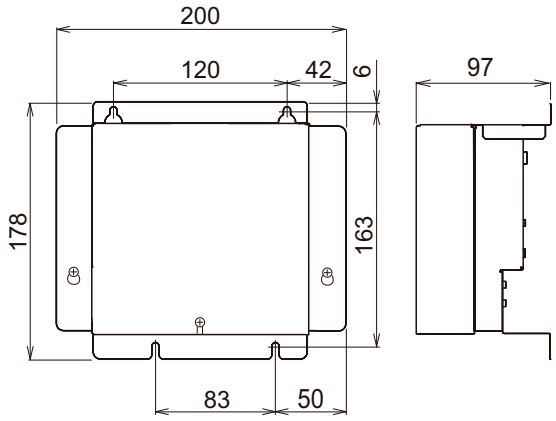

■ Wiring diagram

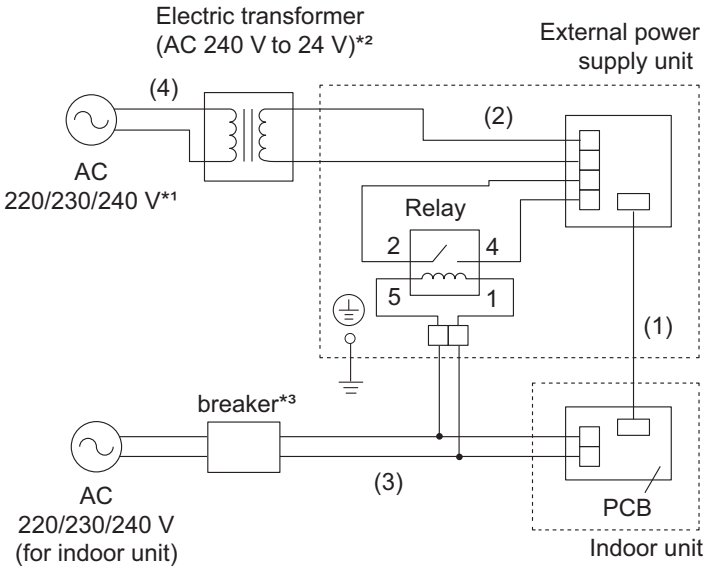

NOTES:

- *1: A dedicated power supply that is not shut off even if turned off the indoor units.
- *2: Locally purchased
- *3: Circuit breaker and earth leakage breaker

(1) Connect the external power supply unit and the PCB of the indoor unit with the provided connecting cable. (Depending on the model of the indoor unit, the adapter cable is also used.)
(2) Connect AC 24 V (±20%) power to the terminal of the external power supply unit.
(3) Connect the indoor unit and the external power supply unit to the circuit breaker.
(4) Connect the power line of the power transformer primary side to the circuit breaker.

■ Electrical requirement

The following item is necessary to install this product. (This item is not included with this product and must be purchased separately.)

Name	Q'ty	Description
Electric transformer	1	AC 24 V ±15% UL Class II

NOTE: When connecting multiple units, do not exceed the capacity of the transformer.

■ Accessories

Part name	Exterior	Q'ty	Part name	Exterior	Q'ty
Installation manual		1	Adapter cable		1*1
External power supply unit		1	EMI core		1*2
Tapping screw		4	Cable tie (large)		2
Connecting cable (5 m)		1	Cable tie (small)		1

NOTES:

- *1: It is used to connect to the following indoor unit type.
  - Circular flow cassette type
  - 3D flow cassette type
  - Compact floor type and Compact floor (EEV external) type
- *2: It is used to connect to the following indoor unit type.
  - Floor/Ceiling type

■ Installation precautions

This product can be installed in the following direction.

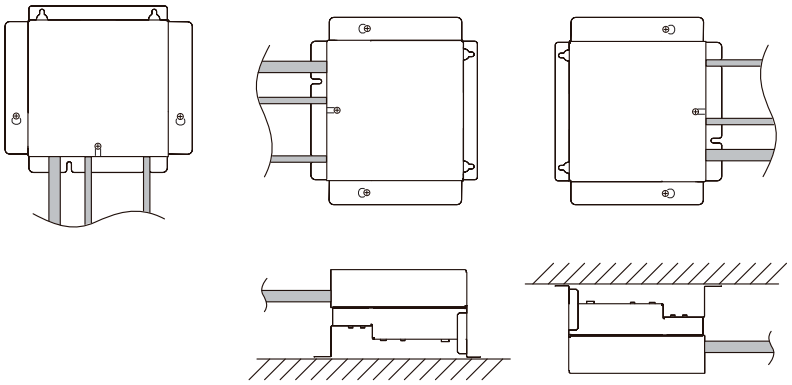

Prohibited

To prevent water from entering through the cable,
do not install this product in the direction shown in the following figure.

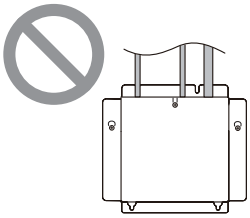

FUJITSU GENERAL LIMITED

3-3-17, Suenaga, Takatsu-ku, Kawasaki 213-8502, Japan
URL : http://www.fujitsu-general.com

- "AIRSTAGE" is a worldwide trademark of FUJITSU GENERAL LIMITED.
- Microsoft, Internet Explorer, Windows, and Windows Vista are either registered trademarks or trademarks of Microsoft Corporation in the United States and/or other countries.
- Adobe and Acrobat Reader are either registered trademarks or trademarks of Adobe Systems Incorporated in the United States and/or other countries.
- Intel is a trademark of Intel Corporation in the U.S. and/or other countries.
- Echelon, LONWORKS, and the Echelon logo are trademarks of Echelon Corporation registered in the United States and other countries.
- BACnet is a registered trademark of the American Society of Heating Refrigeration and Air Conditioning Engineers (ASHRAE).
- Other company and product names mentioned herein may be registered trademarks, trademarks or trade names of their respective owners.

Copyright © 2020, 2022 Fujitsu General Limited. All rights reserved.

Product specifications are subject to change without notice.
Printed in Japan

DV_J4SE067EF_08
2022.04.28