GENERAL

REFRIGERANT R32
INVERTER

AIR CONDITIONER

Duct type

DESIGN & TECHNICAL MANUAL

INDOOR			
	ARXG24KMLA ARXG30KMLA ARXG36KMLA ARXG45KMLA		
OUTDOOR			
	AOHG24KBTB	AOHG30KBTB AOHG36KBTB	AOHG45KBTB

FUJITSU GENERAL LIMITED

DR_AR028EF_03
2019.08.23

Notices:
- Product specifications and design are subject to change without notice for future improvement.
- For further details, please check with our authorized dealer.

Trademarks

FGLair™ is trademark of Fujitsu General Limited in the United States, other countries or both.

Google Play™ is trademark of Google Inc.

App Store® is a service mark of Apple Inc., registered in the U.S. and other countries.

Copyright © 2019 Fujitsu General Limited. All rights reserved.

CONTENTS

Part 1. INDOOR UNIT 1

1. Specifications 2

2. Dimensions 4

2-1. Models: ARXG24KMLA, ARXG30KMLA, ARXG36KMLA, and ARXG45KMLA 4

2-2. Installation space requirement 5

2-3. Maintenance space requirement 6

3. Wiring diagrams 7

3-1. Model: ARXG24KMLA 7

3-2. Models: ARXG30KMLA, ARXG36KMLA, and ARXG45KMLA 7

4. Capacity table 8

4-1. Cooling capacity 8

4-2. Heating capacity 10

5. Fan performance 11

5-1. Fan performance curve 11

5-2. Airflow 43

6. Operation noise (sound pressure) 46

6-1. Noise level curve 46

6-2. Sound level check point 48

7. Safety devices 49

8. External input and output 50

8-1. External input 50

8-2. External output 51

8-3. Combination of external input and output 52

8-4. Details of function 53

9. Function settings 56

9-1. Function settings on indoor unit 56

9-2. Function settings by using remote controller 58

10. Accessories 62

10-1.Models: ARXG24KMLA, ARXG30KMLA, ARXG36KMLA, and ARXG45KMLA 62

11. Optional parts 63

11-1.Controllers 63

11-2.Others 64

CONTENTS (continued)

Part 2. OUTDOOR UNIT.....67

1. Specifications.....68

2. Dimensions.....71

2-1. Model: AOHG24KBTB.....71

2-2. Models: AOHG30KBTB and AOHG36KBTB.....72

2-3. Model: AOHG45KBTB.....73

3. Installation space.....74

3-1. Model: AOHG24KBTB.....74

3-2. Models: AOHG30KBTB, AOHG36KBTB, and AOHG45KBTB.....77

4. Refrigerant circuit.....80

4-1. Models: AOHG24KBTB and AOHG30KBTB.....80

4-2. Models:AOHG36KBTB and AOHG45KBTB.....81

5. Wiring diagrams.....82

5-1. Model: AOHG24KBTB.....82

5-2. Model: AOHG30KBTB.....83

5-3. Model: AOHG36KBTB.....84

5-4. Model: AOHG45KBTB.....84

6. Capacity compensation rate for pipe length and height difference.....85

6-1. Model: AOHG24KBTB.....85

6-2. Model: AOHG30KBTB.....86

6-3. Model: AOHG36KBTB.....87

6-4. Model: AOHG45KBTB.....88

7. Additional charge calculation.....89

7-1. Model: AOHG24KBTB.....89

7-2. Models: AOHG30KBTB and AOHG36KBTB.....89

7-3. Model: AOHG45KBTB.....89

8. Airflow.....90

8-1. Model: AOHG24KBTB.....90

8-2. Models: AOHG30KBTB and AOHG36KBTB.....90

8-3. Model: AOHG45KBTB.....90

9. Operation noise (sound pressure).....91

9-1. Noise level curve.....91

9-2. Sound level check point.....93

10. Electrical characteristics.....94

11. Safety devices.....95

12. External input and output (30-45 models).....97

12-1.External input.....97

12-2.External output.....99

13. Function settings (30-45 models).....101

13-1.Control PCB and switch buttons location.....101

CONTENTS (continued)

13-2.Local setting procedure 103
14. Accessories 105
14-1.Model: AOHG24KBTB 105
14-2.Models: AOHG30KBTB, AOHG36KBTB, and AOHG45KBTB 105
15. Optional parts 106

Part 1. INDOOR UNIT

DUCT TYPE:

ARXG24KMLA
ARXG30KMLA
ARXG36KMLA
ARXG45KMLA

DUCT TYPE
ARHG24-45KMLA

1. Specifications

Type					Inverter heat pump			
Model name					ARXG24KMLA	ARXG30KMLA	ARXG36KMLA	ARXG45KMLA
Power supply					230 V ~ 50 Hz			
Power supply intake					Outdoor unit			
Available voltage range					198—264 V			
Capacity	Cooling	Rated		kW	6.8	8.5	9.5	12.1
				Btu/h	23,200	29,000	32,400	41,300
		Min.—Max.		kW	0.9—8.0	2.8—10.0	2.8—11.2	4.0—13.0
				Btu/h	3,100—27,300	9,600—34,100	9,600—38,200	13,600—44,400
	Heating	Rated		kW	7.5	10.0	10.8	13.5
				Btu/h	25,600	34,100	36,900	46,100
		Min.—Max.		kW	0.9—9.1	2.7—11.2	2.7—12.7	4.2—15.2
				Btu/h	3,100—31,000	9,200—38,200	9,200—43,300	14,300—51,900
Input power	Cooling	Rated		kW	2.14	2.65	2.97	4.22
		Max.			3.03	3.83	4.29	5.03
	Heating	Rated			1.97	2.63	2.88	3.84
		Max.			2.65	4.37	4.66	4.79
Current	Cooling	Rated		A	9.4	11.7	13.1	18.6
	Heating				8.7	11.7	12.8	16.9
Power factor	Cooling			%	98.8	98.1	98.3	98.8
	Heating				98.8	97.7	98.2	98.9
EER		Cooling		kW/kW	3.18	3.21	3.20	2.87
COP		Heating			3.80		3.75	3.52
Moisture removal				L/h (pints/h)	2.5 (4.4)		3.0 (5.3)	4.0 (7.0)
Maximum operating current *1		Cooling		A	13.6	22.6	22.6	28.5
		Heating			13.6	22.6	22.6	28.5
Fan	Airflow rate	Cooling	HIGH	m^3/h	1,100	1,900		2,100
			MED		910	1,620		1,750
			LOW		750	1,270		1,350
			QUIET		580	980		1,070
		Heating	HIGH		1,100	2,100		
			MED		910	1,620		1,750
			LOW		750	1,270		1,350
			QUIET		580	980		1,070
	Type × Q'ty				Sirocco × 2			
	Motor output			W	106	197		
Static pressure range				Pa	30 to 150			
Sound pressure level *2		Cooling	HIGH	dB (A)	31	39		42
			MED		29	35		38
			LOW		27	30		32
			QUIET		25	26		28
		Heating	HIGH		31	42		42
			MED		29	35		38
			LOW		27	30		32
			QUIET		25	26		28
Sound power level		Cooling	HIGH	dB (A)	60	65		68
		Heating			62	69	70	70
Heat exchanger type		Dimensions (H × W × D)		mm	294 × 1,000 × 39.9			294 × 1,000 × 53.2
		Fin pitch			1.40			
		Rows × Stages			3 × 14			4 × 14
		Pipe type			Copper			
		Fin type			Aluminum			
Enclosure		Material			Steel sheet			
		Color			—			
Dimensions (H × W × D)	Net			mm	270 × 1,135 × 700			
	Gross				300 × 1,320 × 790			
Weight	Net			kg	35	38		39
	Gross				43	45		47
Connection pipe	Size	Liquid		mm (in)	Ø6.35 (1/4)	Ø9.52 (3/8)		
		Gas			Ø12.70 (1/2)	Ø15.88 (5/8)		
	Method				Flare			
Drain port	Material				Steel			
	Size			mm	Ø36 (I.D.), Ø38 (O.D.)			
Operation range		Cooling		°C	18 to 32			
				%RH	80 or less			
		Heating		°C	16 to 30			
Remote control (Option)					Wired remote controller, Wireless remote controller, Mobile app*3 (FGLair™)			

NOTES:

- Specifications are based on the following conditions:
  - Cooling: Indoor temperature of 27 °CDB/19 °CWB, and outdoor temperature of 35 °CDB/24 °CWB.
  - Heating: Indoor temperature of 20 °CDB/15 °CWB, and outdoor temperature of 7 °CDB/6 °CWB.
  - Standard static pressure; 24 type: 35 Pa, 30 and 36 types: 47 Pa, 45 type: 60 Pa
  - Pipe length: 5 m, Height difference: 0 m. (Between outdoor unit and indoor unit.)
- Protective function might work when using it outside the operation range.
- *1: Maximum operating current is the total current of the indoor unit and the outdoor unit.
- *2: Sound pressure level:
  - Measured values in manufacturer's anechoic chamber.
  - Because of the surrounding sound environment, the sound levels measured in actual installation conditions might be higher than the specified values here.
- *3: Available on Google Play™ store or on App Store®. Optional WLAN adapter is also required. For details, refer to the setting manual.

DUCT TYPE
ARHG24-45KMLA

Model name			ARXG24KMLA	ARXG30KMLA	ARXG36KMLA
Energy efficiency class	Cooling		A^{++}	A^{++}	A^{++}
	Heating (Average)		A^{+}	A^{+}	A^{+}
Pdesign	Cooling	kW	6.8 (35°C)	8.5 (35°C)	9.5 (35°C)
	Heating (Average)		6.0 (-10°C)	8.0 (-10°C)	8.7 (-10°C)
SEER	Cooling	kWh/kWh	6.20	6.23	6.10
SCOP	Heating (Average)		4.10	4.00	4.00
Annual energy consumption	QCE	kWh/a	384	477	545
	QHE (Average)		2,045	2,797	3,044

DUCT TYPE
ARHG24-45KMLA

2. Dimensions

2-1. Models: ARXG24KMLA, ARXG30KMLA, ARXG36KMLA, and ARXG45KMLA

Unit: mm

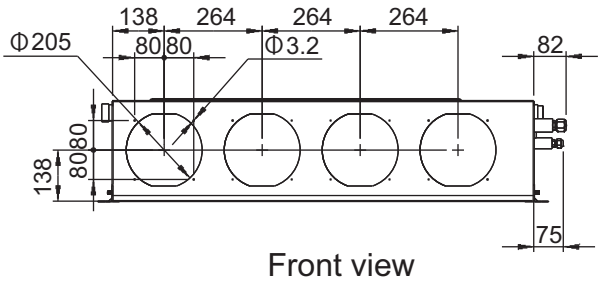

Front view

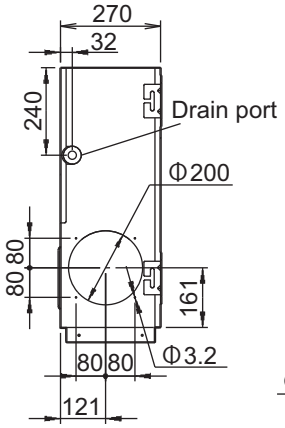

Side view (L)

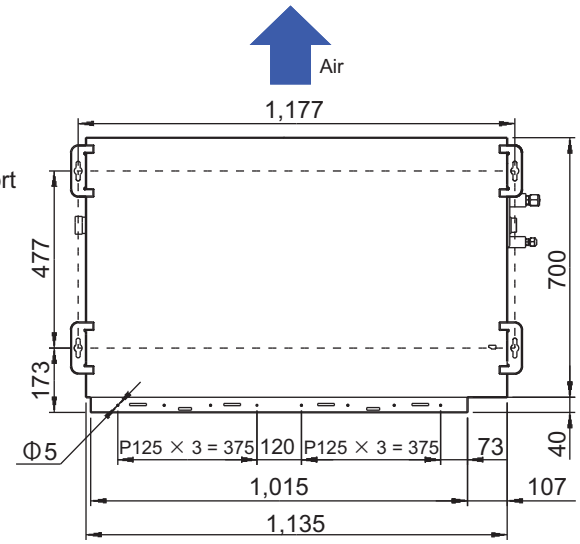

Top view

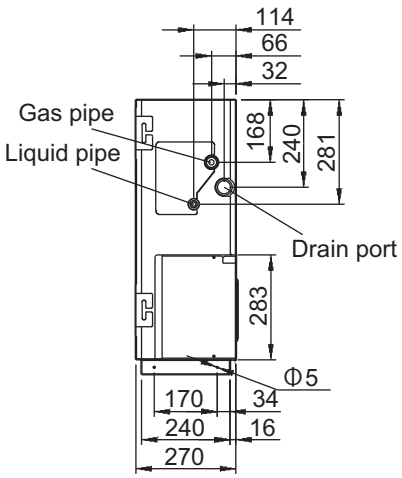

Side view (R)

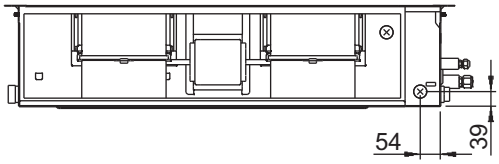

Rear view

DUCT TYPE
ARHG24-45KMLA

2-2. Installation space requirement

Provide sufficient installation space for product safety.

■ Models: ARXG24KMLA, ARXG30KMLA, ARXG36KMLA, and ARXG45KMLA

Unit: mm

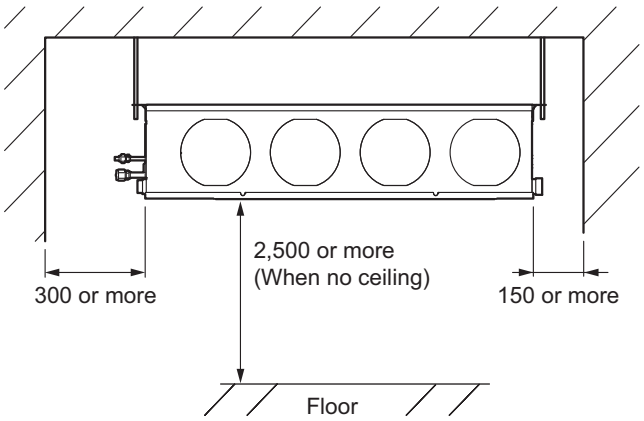

DUCT TYPE
ARHG24-45KMLA

2-3. Maintenance space requirement

For future maintenance and service access, provide sufficient maintenance space.

NOTE: Do not place any wiring or illumination in the maintenance space, as they will impede service.

■ Models: ARXG24KMLA, ARXG30KMLA, ARXG36KMLA, and ARXG45KMLA

Unit: mm

- Provide a service access for maintenance purposes.

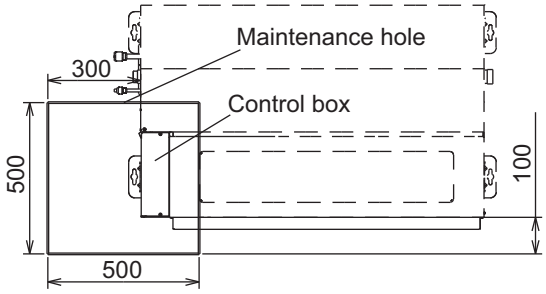

- The service access necessary for fan units and filter maintenance.

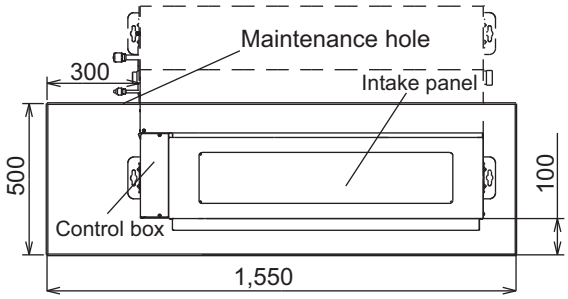

- When using a square duct

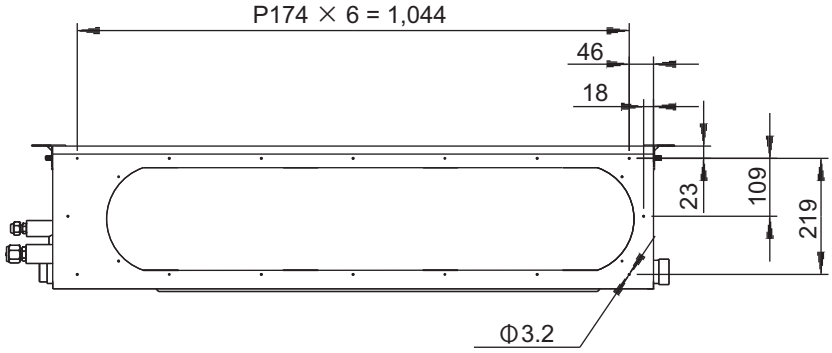

- Bottom air intake hole

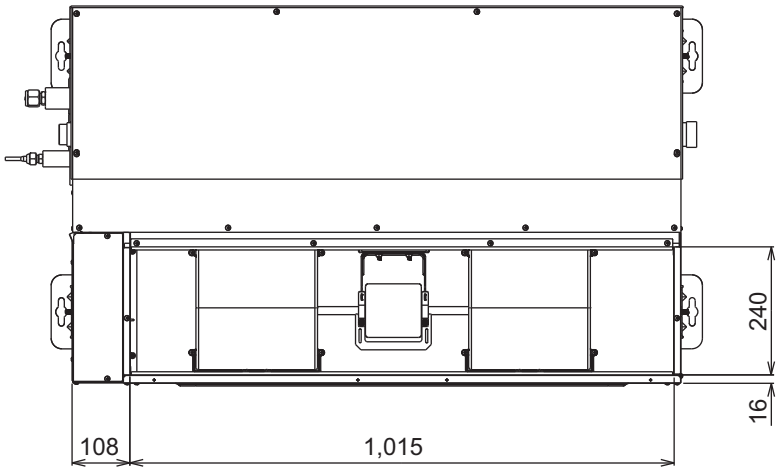

DUCT TYPE
ARHG24-45KMLA

3. Wiring diagrams

3-1. Model: ARXG24KMLA

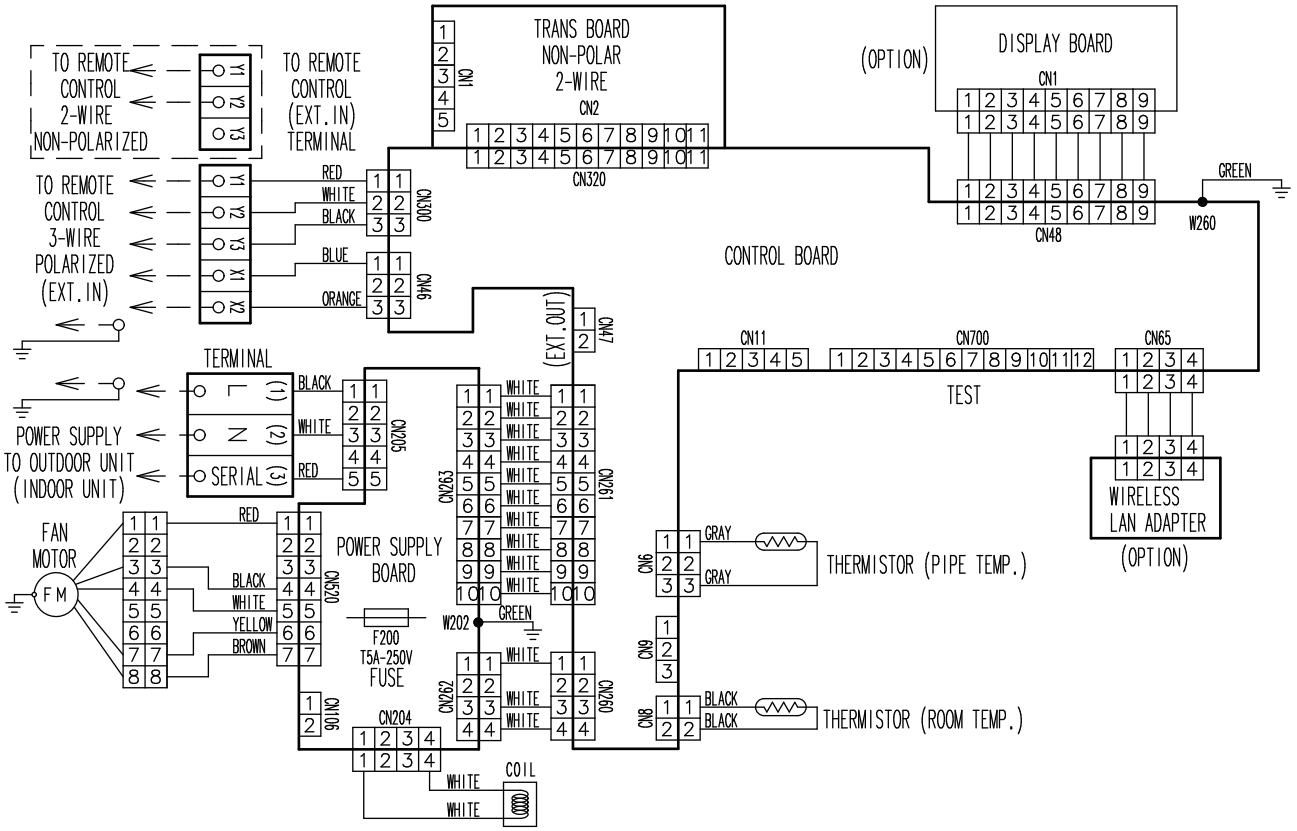

3-2. Models: ARXG30KMLA, ARXG36KMLA, and ARXG45KMLA

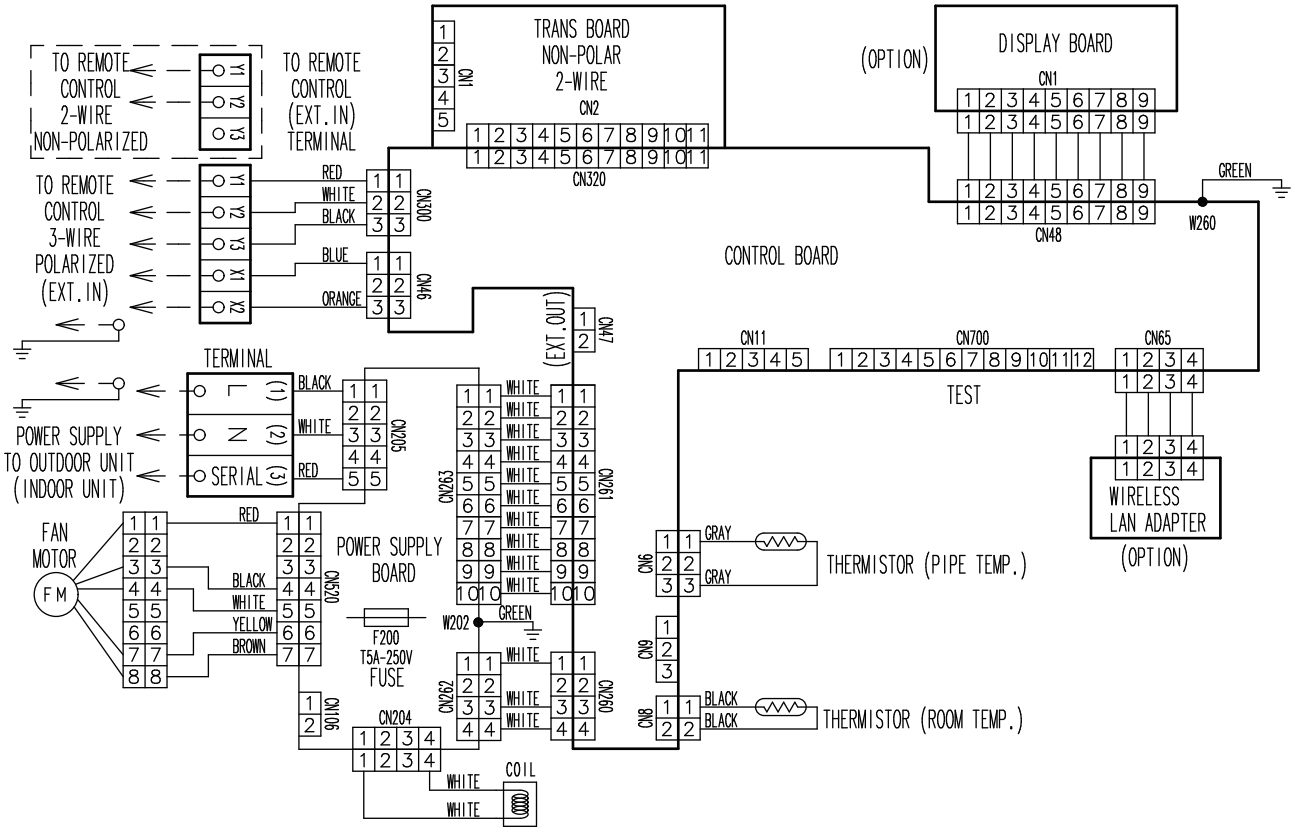

4. Capacity table

Capacity tables show each of following values calculated based on the outdoor temperature and the indoor temperature, under given Airflow Rate (AFR):

For cooling capacity: Total Capacity (TC), Sensible Heat Capacity (SHC), and Input Power (IP)

For heating capacity: Total Capacity (TC) and Input Power (IP)

4-1. Cooling capacity

■ Model: ARXG24KMLA

AFR	m^3/h	1,100

		Indoor temperature																				
	°CDB	18			21			23			25			27			29			32		
	°CWB	12			15			16			18			19			21			23		
Outdoor temperature	°CDB	TC	SHC	IP	TC	SHC	IP	TC	SHC	IP	TC	SHC	IP	TC	SHC	IP	TC	SHC	IP	TC	SHC	IP
		kW			kW			kW			kW			kW			kW			kW		
	-15	5.66	4.36	0.68	6.30	4.39	0.70	6.52	4.77	0.70	6.95	4.79	0.71	7.16	5.17	0.71	7.59	5.15	0.72	8.02	5.48	0.72
	-10	5.70	4.37	0.58	6.35	4.40	0.59	6.57	4.78	0.59	7.00	4.80	0.60	7.22	5.18	0.60	7.65	5.16	0.61	8.09	5.50	0.61
	0	5.56	4.31	0.59	6.19	4.33	0.60	6.40	4.71	0.60	6.83	4.72	0.61	7.04	5.10	0.61	7.46	5.08	0.62	7.88	5.41	0.63
	5	5.41	4.25	0.75	6.02	4.27	0.77	6.23	4.65	0.77	6.64	4.66	0.78	6.85	5.03	0.78	7.26	5.01	0.79	7.67	5.34	0.80
	10	5.37	4.24	0.73	5.98	4.26	0.74	6.19	4.64	0.75	6.60	4.65	0.75	6.80	5.02	0.76	7.21	5.00	0.76	7.62	5.33	0.77
	15	5.20	4.16	0.88	5.79	4.19	0.90	5.99	4.55	0.90	6.39	4.57	0.91	6.58	4.93	0.91	6.98	4.91	0.92	7.37	5.24	0.93
	20	6.54	4.76	1.57	7.29	4.78	1.59	7.54	5.20	1.60	8.04	5.22	1.61	8.28	5.64	1.62	8.78	5.61	1.64	9.28	5.98	1.66
	25	6.15	4.61	1.74	6.85	4.63	1.77	7.09	5.04	1.78	7.55	5.05	1.79	7.79	5.46	1.80	8.25	5.44	1.82	8.72	5.79	1.84
	30	5.76	4.45	1.90	6.41	4.47	1.93	6.63	4.86	1.94	7.07	4.88	1.96	7.29	5.27	1.97	7.72	5.25	1.99	8.16	5.59	2.01
	35	5.37	4.30	2.07	5.98	4.32	2.10	6.19	4.70	2.11	6.60	4.71	2.13	6.80	5.09	2.14	7.21	5.07	2.16	7.62	5.40	2.18
	40	5.09	4.16	2.24	5.67	4.19	2.27	5.87	4.55	2.29	6.26	4.57	2.31	6.45	4.93	2.32	6.84	4.91	2.34	7.22	5.24	2.37
	46	4.18	3.68	1.93	4.66	3.71	1.96	4.82	4.03	1.97	5.13	4.04	1.99	5.29	4.37	2.00	5.61	4.35	2.02	5.93	4.63	2.04

■ Model: ARXG30KMLA

AFR	m^3/h	1,900

		Indoor temperature																				
	°CDB	18			21			23			25			27			29			32		
	°CWB	12			15			16			18			19			21			23		
Outdoor temperature	°CDB	TC	SHC	IP	TC	SHC	IP	TC	SHC	IP	TC	SHC	IP	TC	SHC	IP	TC	SHC	IP	TC	SHC	IP
		kW			kW			kW			kW			kW			kW			kW		
	-15	6.18	5.12	1.03	6.40	5.13	1.06	6.54	5.14	1.08	6.91	5.39	1.09	7.27	5.64	1.11	7.68	5.82	1.13	8.29	6.09	1.15
	-10	6.05	5.04	1.26	6.26	5.06	1.29	6.41	5.07	1.31	6.76	5.31	1.33	7.12	5.55	1.35	7.52	5.73	1.37	8.12	6.00	1.40
	0	5.79	4.89	1.70	6.00	4.91	1.74	6.13	4.92	1.77	6.47	5.15	1.80	6.82	5.39	1.83	7.20	5.56	1.85	7.77	5.82	1.89
	5	5.74	4.87	1.75	5.95	4.88	1.79	6.08	4.89	1.82	6.42	5.13	1.85	6.76	5.36	1.88	7.14	5.54	1.91	7.71	5.79	1.95
	10	5.69	4.85	1.80	5.89	4.86	1.85	6.03	4.87	1.87	6.36	5.10	1.91	6.70	5.34	1.94	7.07	5.51	1.97	7.64	5.77	2.01
	15	5.60	4.77	1.86	5.79	4.78	1.90	5.93	4.79	1.93	6.26	5.02	1.96	6.59	5.25	1.99	6.96	5.42	2.02	7.51	5.67	2.07
	20	8.44	6.42	2.24	8.74	6.44	2.29	8.94	6.45	2.33	9.44	6.76	2.37	9.93	7.07	2.41	10.49	7.30	2.44	11.33	7.64	2.49
	25	8.04	6.31	2.31	8.32	6.33	2.37	8.51	6.34	2.40	8.98	6.64	2.45	9.46	6.95	2.49	9.99	7.17	2.52	10.78	7.51	2.58
	30	7.63	6.20	2.39	7.90	6.22	2.45	8.08	6.23	2.48	8.53	6.53	2.53	8.98	6.83	2.57	9.48	7.05	2.61	10.24	7.37	2.66
	35	7.22	6.09	2.47	7.48	6.11	2.52	7.65	6.12	2.56	8.07	6.41	2.61	8.50	6.71	2.65	8.98	6.92	2.69	9.69	7.24	2.75
	40	6.76	5.98	2.58	7.00	6.00	2.64	7.16	6.01	2.68	7.56	6.30	2.72	7.95	6.59	2.77	8.40	6.80	2.81	9.07	7.11	2.87
	46	6.20	5.85	2.71	6.42	5.86	2.77	6.57	5.88	2.82	6.93	6.16	2.86	7.30	6.44	2.91	7.71	6.65	2.95	8.32	6.96	3.02

■ Model: ARXG36KMLA

AFR	m^3/h	1,900

		Indoor temperature																				
	°CDB	18			21			23			25			27			29			32		
	°CWB	12			15			16			18			19			21			23		
Outdoor temperature	°CDB	TC	SHC	IP	TC	SHC	IP	TC	SHC	IP	TC	SHC	IP	TC	SHC	IP	TC	SHC	IP	TC	SHC	IP
		kW			kW			kW			kW			kW			kW			kW		
	-15	6.91	5.51	1.03	7.15	5.53	1.06	7.31	5.55	1.08	7.72	5.81	1.09	8.13	6.08	1.11	8.58	6.27	1.13	9.27	6.56	1.15
	-10	6.76	5.50	1.26	7.00	5.52	1.29	7.16	5.53	1.31	7.56	5.80	1.33	7.96	6.06	1.35	8.40	6.25	1.37	9.07	6.55	1.40
	0	6.47	5.47	1.70	6.70	5.49	1.74	6.86	5.50	1.77	7.24	5.76	1.80	7.62	6.02	1.83	8.05	6.22	1.85	8.69	6.51	1.89
	5	6.42	5.44	1.75	6.64	5.46	1.79	6.80	5.48	1.82	7.17	5.74	1.85	7.55	6.00	1.88	7.98	6.19	1.91	8.61	6.48	1.95
	10	6.36	5.42	1.80	6.59	5.44	1.85	6.74	5.46	1.87	7.11	5.72	1.91	7.49	5.98	1.94	7.91	6.17	1.97	8.54	6.46	2.01
	15	6.26	5.33	1.86	6.48	5.35	1.90	6.62	5.37	1.93	6.99	5.62	1.96	7.36	5.88	1.99	7.77	6.07	2.02	8.39	6.35	2.07
	20	9.44	7.16	2.51	9.77	7.19	2.57	9.99	7.21	2.61	10.55	7.55	2.65	11.10	7.89	2.70	11.73	8.15	2.73	12.66	8.53	2.79
	25	8.98	6.97	2.59	9.30	7.00	2.65	9.51	7.02	2.70	10.04	7.35	2.74	10.57	7.69	2.79	11.16	7.93	2.83	12.05	8.30	2.89
	30	8.53	6.78	2.68	8.83	6.81	2.74	9.03	6.83	2.78	9.53	7.15	2.83	10.03	7.48	2.88	10.60	7.72	2.92	11.44	8.08	2.98
	35	8.07	6.60	2.76	8.36	6.62	2.83	8.55	6.64	2.87	9.02	6.95	2.92	9.50	7.27	2.97	10.03	7.50	3.01	10.83	7.85	3.08
	40	7.55	6.41	2.89	7.82	6.43	2.96	8.00	6.45	3.00	8.44	6.75	3.05	8.89	7.06	3.10	9.39	7.29	3.15	10.14	7.63	3.22
	46	6.93	6.18	3.04	7.18	6.20	3.11	7.34	6.22	3.16	7.75	6.52	3.21	8.16	6.81	3.26	8.61	7.03	3.31	9.30	7.36	3.38

DUCT TYPE
ARHG24-45KMLA

■ Model: ARXG45KMLA

AFR	m^3/h	2,100

		Indoor temperature																				
	°CDB	18			21			23			25			27			29			32		
	°CWB	12			15			16			18			19			21			23		
Outdoor temperature	°CDB	TC	SHC	IP	TC	SHC	IP	TC	SHC	IP	TC	SHC	IP	TC	SHC	IP	TC	SHC	IP	TC	SHC	IP
		kW			kW			kW			kW			kW			kW			kW		
	-15	8.51	6.64	1.68	9.23	6.97	1.72	9.72	7.19	1.74	10.20	7.49	1.77	10.68	7.79	1.79	11.13	7.94	1.79	11.79	8.15	1.79
	-10	8.58	6.70	1.70	9.31	7.04	1.74	9.80	7.26	1.77	10.28	7.57	1.79	10.77	7.87	1.82	11.22	8.01	1.82	11.89	8.23	1.82
	0	8.73	6.83	1.75	9.47	7.17	1.79	9.96	7.40	1.82	10.46	7.71	1.84	10.95	8.02	1.87	11.41	8.17	1.87	12.09	8.39	1.87
	5	8.57	6.74	1.80	9.30	7.08	1.84	9.78	7.31	1.86	10.27	7.61	1.89	10.76	7.92	1.92	11.20	8.06	1.92	11.88	8.28	1.92
	10	8.42	6.65	1.84	9.13	6.99	1.88	9.61	7.21	1.91	10.08	7.51	1.94	10.56	7.81	1.96	11.00	7.96	1.96	11.66	8.17	1.96
	15	8.27	6.54	1.89	8.98	6.87	1.94	9.45	7.10	1.96	9.91	7.39	1.99	10.38	7.69	2.02	10.82	7.83	2.02	11.47	8.04	2.02
	20	11.05	8.40	3.59	11.99	8.82	3.67	12.61	9.10	3.72	13.24	9.48	3.78	13.86	9.86	3.83	14.44	10.04	3.83	15.31	10.31	3.83
	25	10.58	8.18	3.71	11.48	8.60	3.80	12.08	8.87	3.85	12.68	9.24	3.91	13.28	9.61	3.96	13.83	9.79	3.96	14.66	10.05	3.96
	30	10.11	7.97	3.83	10.97	8.38	3.92	11.54	8.64	3.98	12.12	9.00	4.03	12.69	9.36	4.09	13.22	9.54	4.09	14.01	9.79	4.09
	35	9.64	7.76	3.96	10.46	8.15	4.04	11.01	8.41	4.10	11.55	8.77	4.16	12.10	9.12	4.22	12.61	9.28	4.22	13.36	9.53	4.22
	40	8.22	7.10	3.56	8.92	7.46	3.64	9.38	7.70	3.70	9.85	8.02	3.75	10.32	8.34	3.80	10.75	8.50	3.80	11.39	8.72	3.80
	46	6.51	6.31	3.09	7.07	6.63	3.16	7.44	6.84	3.21	7.80	7.13	3.25	8.17	7.41	3.30	8.51	7.55	3.30	9.03	7.75	3.30

DUCT TYPE
ARHG24-45KMLA

4-2. Heating capacity

NOTE: Values mentioned in the table are calculated based on the maximum capacity.

■ Model: ARXG24KMLA

AFR	m^3/h	1,100

			Indoor temperature									
		°CDB	16		18		20		22		24	
	°CDB	°CWB	TC	IP	TC	IP	TC	IP	TC	IP	TC	IP
			kW		kW		kW		kW		kW	
Outdoor temperature	-15	-16	6.37	2.22	6.21	2.26	6.06	2.31	5.91	2.36	5.76	2.40
	-10	-11	6.99	2.31	6.82	2.36	6.65	2.40	6.49	2.45	6.32	2.50
	-5	-7	7.62	2.39	7.44	2.44	7.26	2.49	7.08	2.54	6.89	2.59
	0	-2	8.25	2.47	8.06	2.52	7.86	2.57	7.66	2.62	7.47	2.67
	5	3	8.89	2.54	8.67	2.60	8.46	2.65	8.25	2.70	8.04	2.76
	7	6	9.56	2.54	9.33	2.60	9.10	2.65	8.87	2.70	8.65	2.76
	10	8	9.16	2.41	8.94	2.46	8.72	2.51	8.51	2.56	8.29	2.61
	15	10	8.52	2.17	8.31	2.21	8.11	2.26	7.91	2.30	7.70	2.34
	20	15	8.00	1.84	7.81	1.88	7.62	1.92	7.43	1.96	7.24	1.99
	24	18	8.32	1.82	8.13	1.86	7.93	1.90	7.73	1.94	7.53	1.97

■ Model: ARXG30KMLA

AFR	m^3/h	2,100

			Indoor temperature									
		°CDB	16		18		20		22		24	
	°CDB	°CWB	TC	IP	TC	IP	TC	IP	TC	IP	TC	IP
			kW		kW		kW		kW		kW	
Outdoor temperature	-15	-16	7.10	2.78	7.07	2.78	7.04	2.79	6.86	2.79	6.40	2.80
	-10	-11	8.12	3.01	8.09	3.01	8.05	3.01	7.84	3.02	7.33	3.03
	-5	-7	9.14	3.23	9.10	3.24	9.07	3.24	8.83	3.24	8.25	3.26
	0	-2	9.71	3.42	9.67	3.42	9.63	3.43	9.38	3.43	8.76	3.44
	5	3	10.84	3.47	10.80	3.47	10.75	3.48	10.47	3.48	9.78	3.50
	7	6	11.30	3.49	11.25	3.50	11.20	3.50	10.91	3.50	10.19	3.52
	10	8	11.64	3.49	11.59	3.50	11.54	3.50	11.25	3.50	10.50	3.52
	15	10	12.11	3.49	12.06	3.50	12.01	3.50	11.70	3.50	10.93	3.52
	20	15	12.90	3.50	12.84	3.50	12.79	3.51	12.46	3.51	11.64	3.53
	24	18	13.53	3.51	13.47	3.51	13.41	3.52	13.07	3.52	12.20	3.53

■ Model: ARXG36KMLA

AFR	m^3/h	2,100

			Indoor temperature									
		°CDB	16		18		20		22		24	
	°CDB	°CWB	TC	IP	TC	IP	TC	IP	TC	IP	TC	IP
			kW		kW		kW		kW		kW	
Outdoor temperature	-15	-16	8.05	3.18	8.01	3.18	7.98	3.19	7.77	3.19	7.26	3.20
	-10	-11	9.21	3.44	9.17	3.44	9.13	3.44	8.89	3.45	8.31	3.46
	-5	-7	10.37	3.69	10.32	3.70	10.28	3.70	10.02	3.71	9.35	3.72
	0	-2	11.01	3.74	10.97	3.75	10.92	3.75	10.64	3.75	9.94	3.77
	5	3	12.30	3.80	12.24	3.80	12.19	3.81	11.88	3.81	11.09	3.82
	7	6	12.81	3.82	12.75	3.83	12.70	3.83	12.37	3.84	11.56	3.85
	10	8	13.20	3.82	13.15	3.83	13.09	3.83	12.75	3.84	11.91	3.85
	15	10	13.73	3.82	13.68	3.83	13.62	3.83	13.27	3.84	12.39	3.85
	20	15	14.63	3.83	14.56	3.84	14.50	3.84	14.13	3.85	13.19	3.86
	24	18	15.34	3.84	15.27	3.84	15.21	3.85	14.82	3.85	13.84	3.87

■ Model: ARXG45KMLA

AFR	m^3/h	2,100

			Indoor temperature									
		°CDB	16		18		20		22		24	
	°CDB	°CWB	TC	IP	TC	IP	TC	IP	TC	IP	TC	IP
			kW		kW		kW		kW		kW	
Outdoor temperature	-15	-16	10.89	4.34	10.63	4.36	10.37	4.38	10.13	4.38	9.53	4.38
	-10	-11	12.10	4.52	11.81	4.54	11.52	4.57	11.25	4.57	10.58	4.57
	-5	-7	13.30	4.71	12.99	4.73	12.67	4.75	12.37	4.75	11.64	4.75
	0	-2	14.53	4.89	14.18	4.92	13.83	4.94	13.51	4.94	12.71	4.94
	5	3	15.55	4.56	15.18	4.58	14.81	4.61	14.46	4.61	13.60	4.61
	7	6	15.96	4.55	15.58	4.58	15.20	4.60	14.85	4.60	13.96	4.60
	10	8	16.62	4.54	16.23	4.57	15.83	4.59	15.46	4.59	14.54	4.59
	15	10	17.73	4.53	17.30	4.55	16.88	4.57	16.49	4.57	15.51	4.57
	20	15	18.83	4.51	18.38	4.53	17.93	4.56	17.51	4.56	16.47	4.56
	24	18	19.71	4.50	19.24	4.52	18.77	4.54	18.33	4.54	17.24	4.54

DUCT TYPE
ARHG24-45KMLA

5. Fan performance

5-1. Fan performance curve

■ Model: ARXG24KMLA (Normal mode)

			Static pressure (Pa)							
			6	11	14	21	25	30	35	40
Fan speed	HIGH	m3/h	—	—	—	—	—	1,200	1,100	1,000
		l/s	—	—	—	—	—	333	306	278
		CFM	—	—	—	—	—	706	647	589
	MED	m3/h	—	—	—	980	915	830	—	—
		l/s	—	—	—	272	254	231	—	—
		CFM	—	—	—	577	539	489	—	—
	LOW	m3/h	—	—	825	690	—	—	—	—
		l/s	—	—	229	192	—	—	—	—
		CFM	—	—	486	406	—	—	—	—
	QUIET	m3/h	630	525	—	—	—	—	—	—
		l/s	175	146	—	—	—	—	—	—
		CFM	371	309	—	—	—	—	—	—

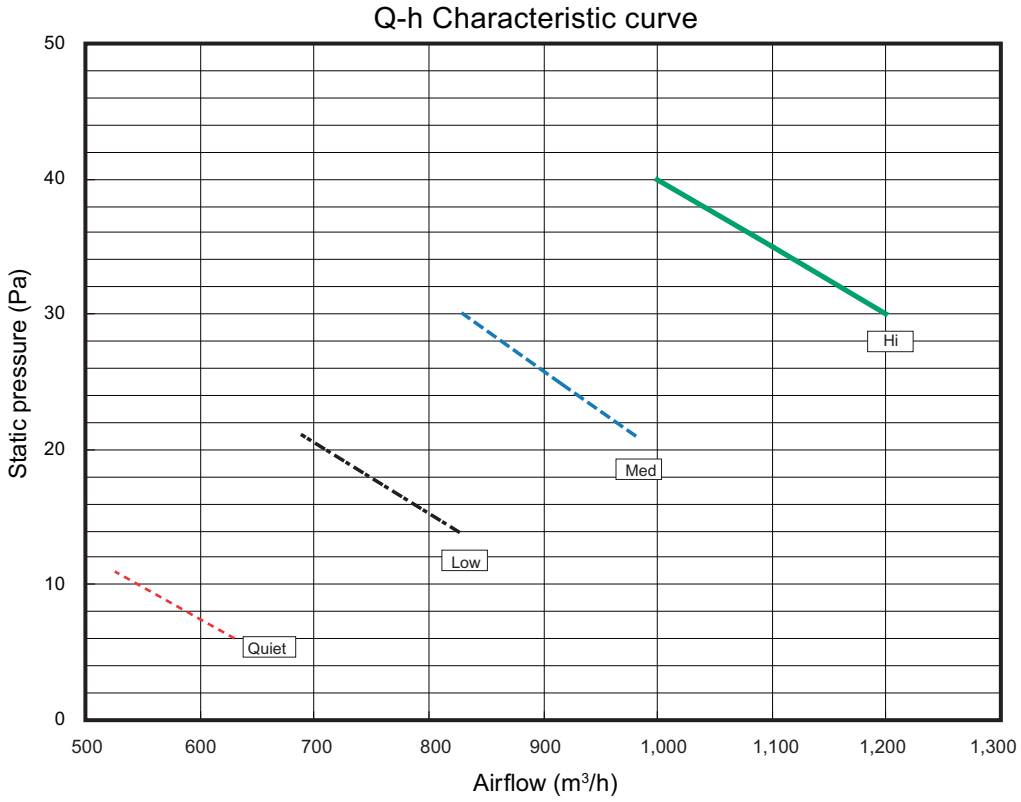

DUCT TYPE
ARHG24-45KMLA

- **Cooling**

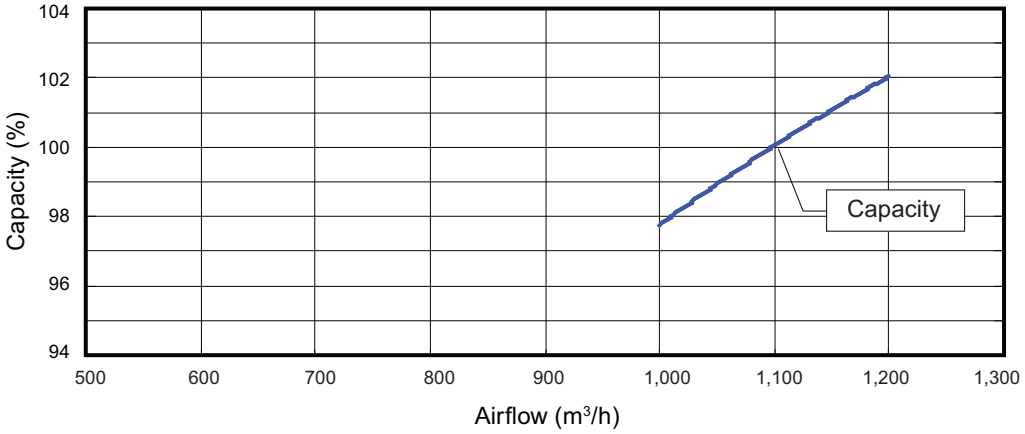

- **Heating**

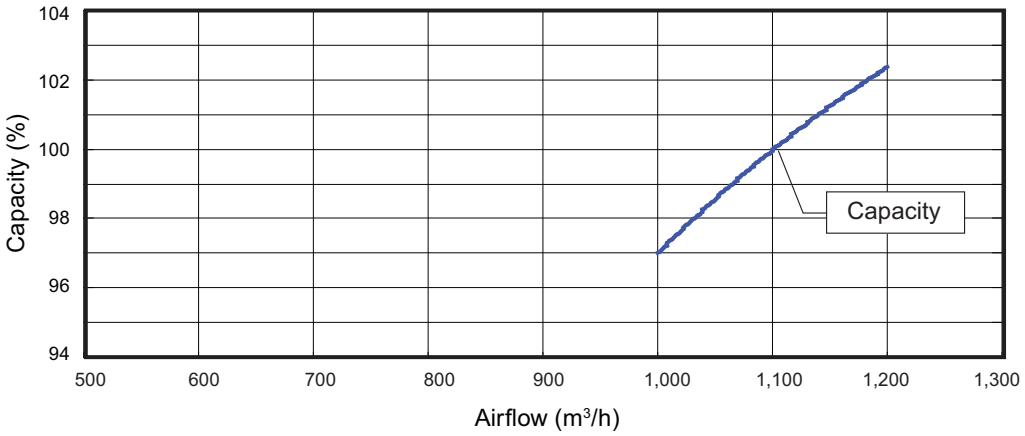

DUCT TYPE
ARHG24-45KMLA

■ Model: ARXG24KMLA (Static pressure mode 1)

			Static pressure (Pa)							
			20	23	30	35	40	47	55	65
Fan speed	HIGH	m3/h	—	—	—	—	—	—	1,200	1,000
		l/s	—	—	—	—	—	—	333	278
		CFM	—	—	—	—	—	—	706	589
	MED	m3/h	—	—	—	—	1,000	815	—	—
		l/s	—	—	—	—	278	226	—	—
		CFM	—	—	—	—	589	480	—	—
	LOW	m3/h	—	—	830	680	—	—	—	—
		l/s	—	—	231	189	—	—	—	—
		CFM	—	—	489	400	—	—	—	—
	QUIET	m3/h	650	540	—	—	—	—	—	—
		l/s	181	150	—	—	—	—	—	—
		CFM	383	318	—	—	—	—	—	—

Q-h Characteristic curve

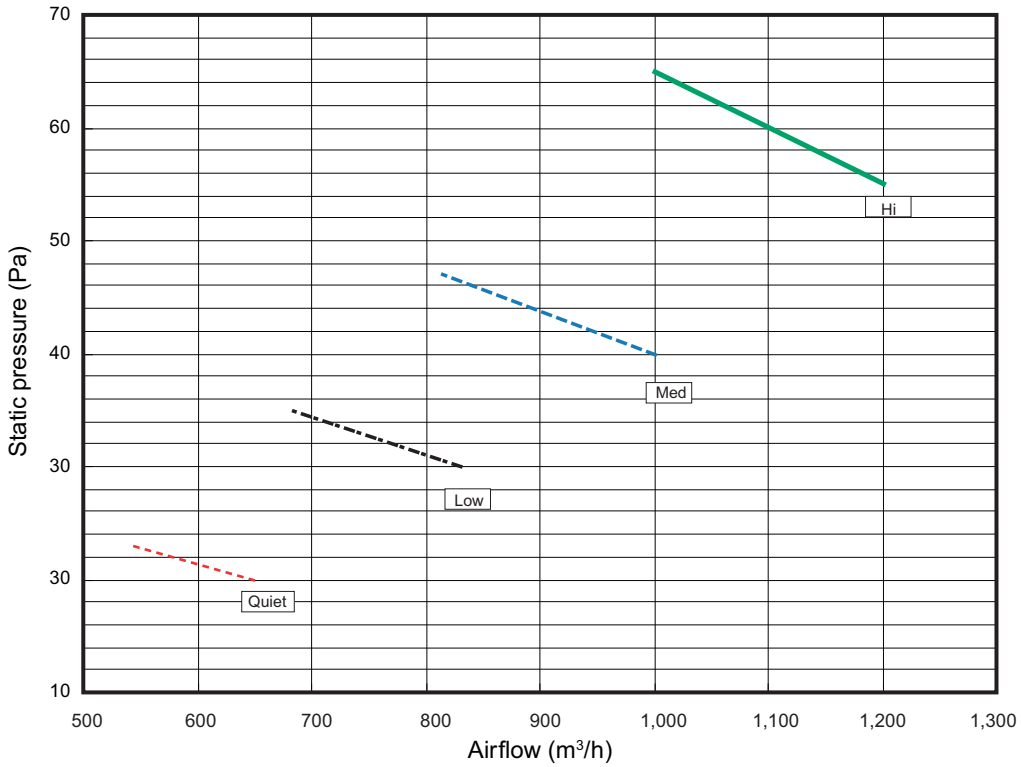

DUCT TYPE
ARHG24-45KMLA

- **Cooling**

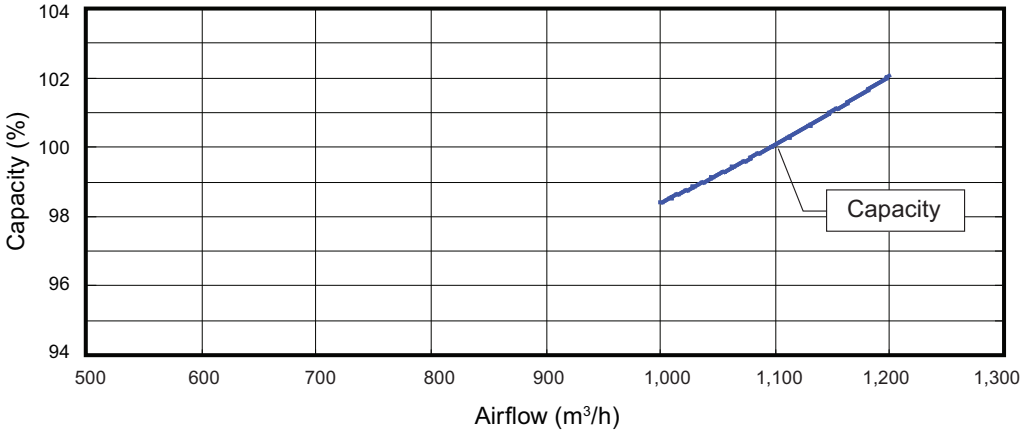

- **Heating**

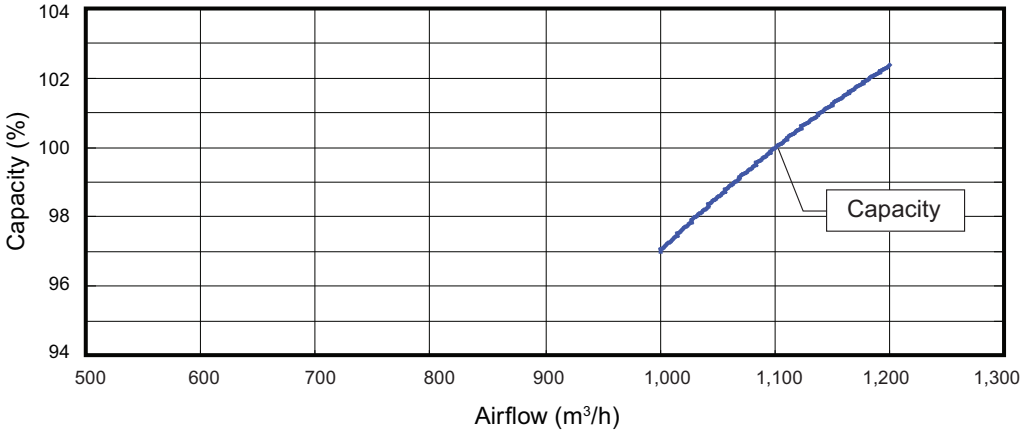

DUCT TYPE
ARHG24-45KMLA

■ Model: ARXG24KMLA (Static pressure mode 2)

			Static pressure (Pa)							
			35	37	50	55	68	75	93	100
Fan speed	HIGH	m3/h	—	—	—	—	—	—	1,160	930
		l/s	—	—	—	—	—	—	322	258
		CFM	—	—	—	—	—	—	683	547
	MED	m3/h	—	—	—	—	1,020	800	—	—
		l/s	—	—	—	—	283	222	—	—
		CFM	—	—	—	—	600	471	—	—
	LOW	m3/h	—	—	835	670	—	—	—	—
		l/s	—	—	232	186	—	—	—	—
		CFM	—	—	491	394	—	—	—	—
	QUIET	m3/h	660	530	—	—	—	—	—	—
		l/s	183	147	—	—	—	—	—	—
		CFM	388	312	—	—	—	—	—	—

Q-h Characteristic curve

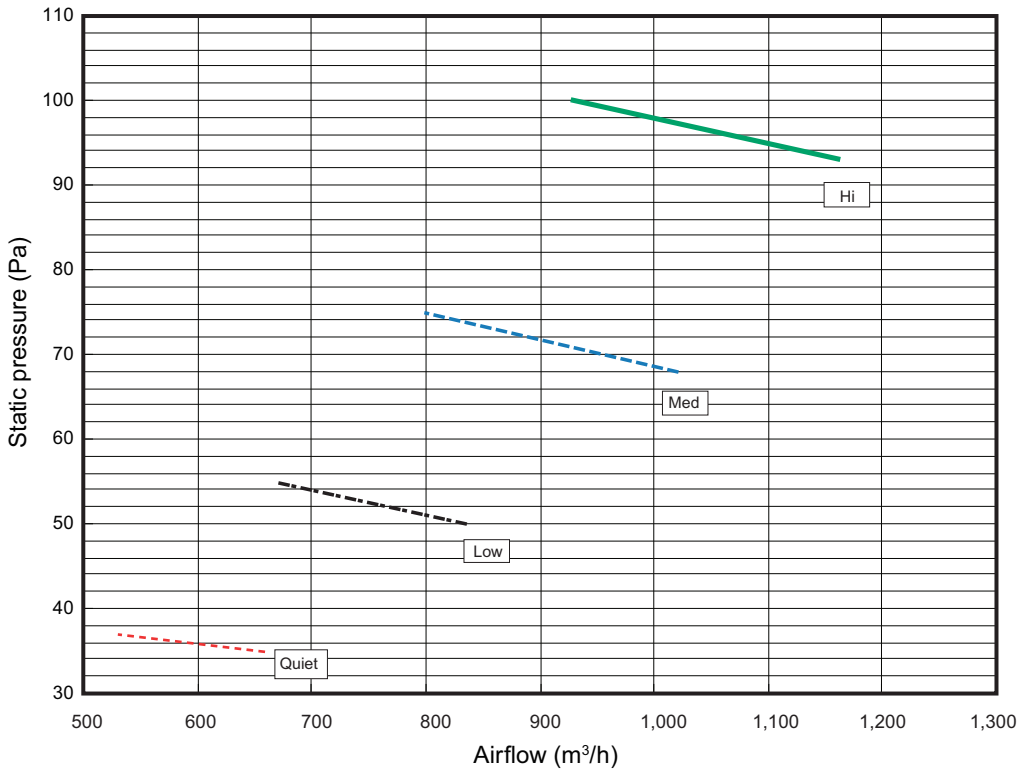

DUCT TYPE
ARHG24-45KMLA

- **Cooling**

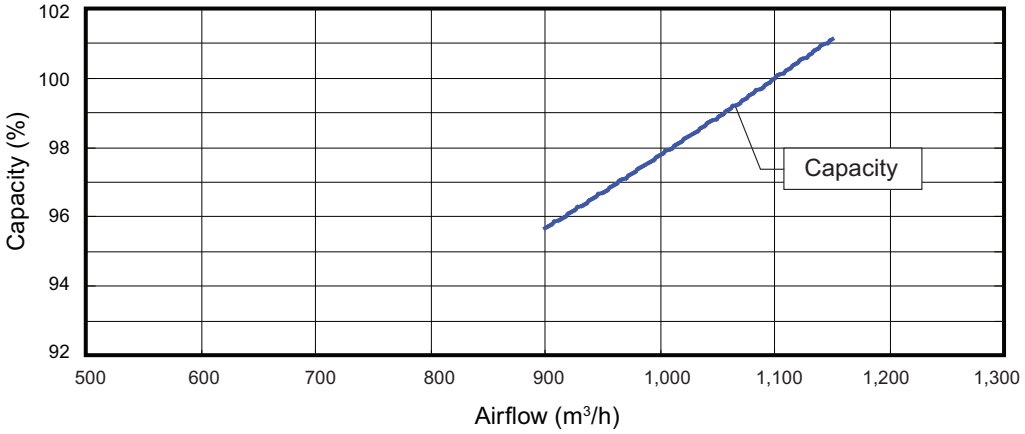

- **Heating**

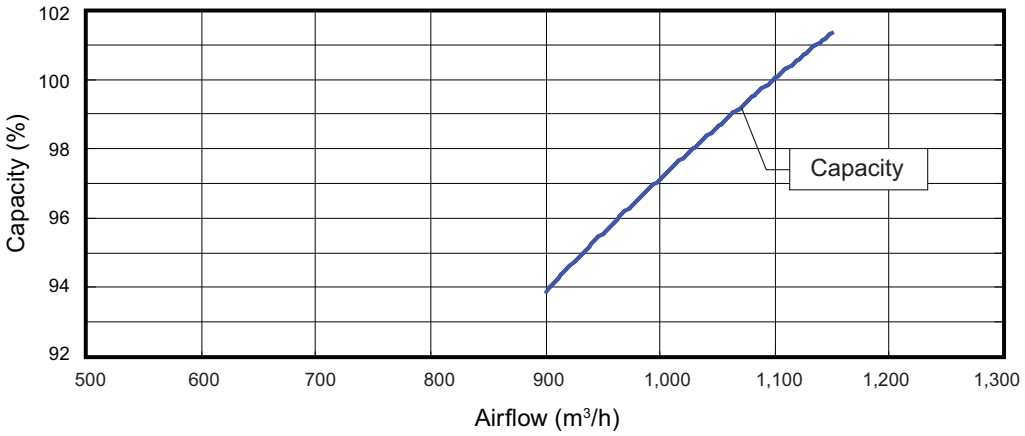

DUCT TYPE
ARHG24-45KMLA

■ Model: ARXG24KMLA (Static pressure mode 3)

			Static pressure (Pa)							
			55	58	85	90	115	122	142	150
Fan speed	HIGH	m3/h	—	—	—	—	—	—	1,100	880
		l/s	—	—	—	—	—	—	306	244
		CFM	—	—	—	—	—	—	647	518
	MED	m3/h	—	—	—	—	1,000	810	—	—
		l/s	—	—	—	—	278	225	—	—
		CFM	—	—	—	—	589	477	—	—
	LOW	m3/h	—	—	840	680	—	—	—	—
		l/s	—	—	233	189	—	—	—	—
		CFM	—	—	494	400	—	—	—	—
	QUIET	m3/h	660	525	—	—	—	—	—	—
		l/s	183	146	—	—	—	—	—	—
		CFM	388	309	—	—	—	—	—	—

Q-h Characteristic curve

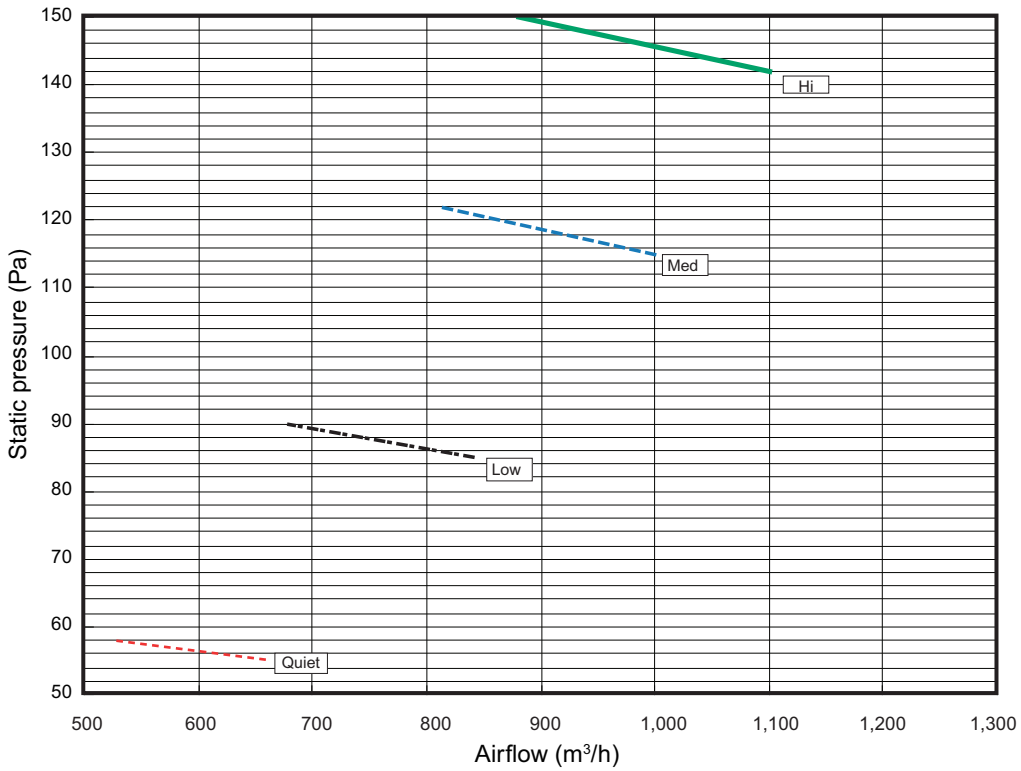

DUCT TYPE
ARHG24-45KMLA

- **Cooling**

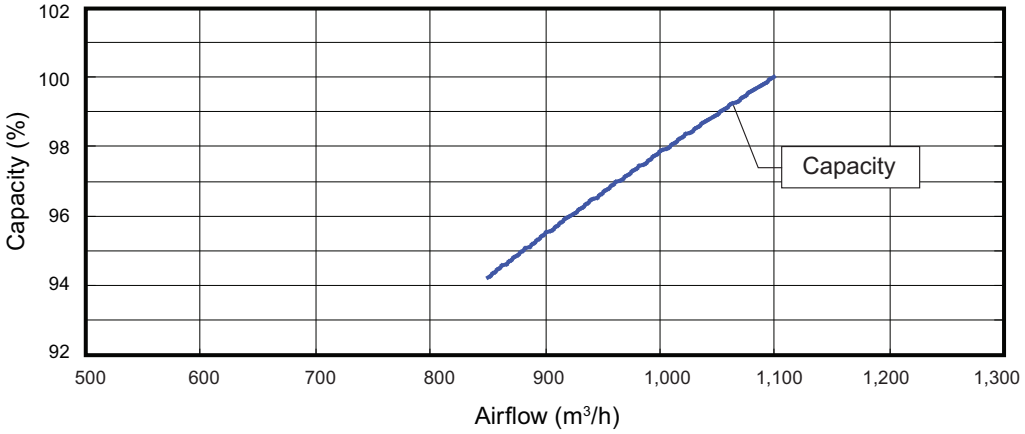

- **Heating**

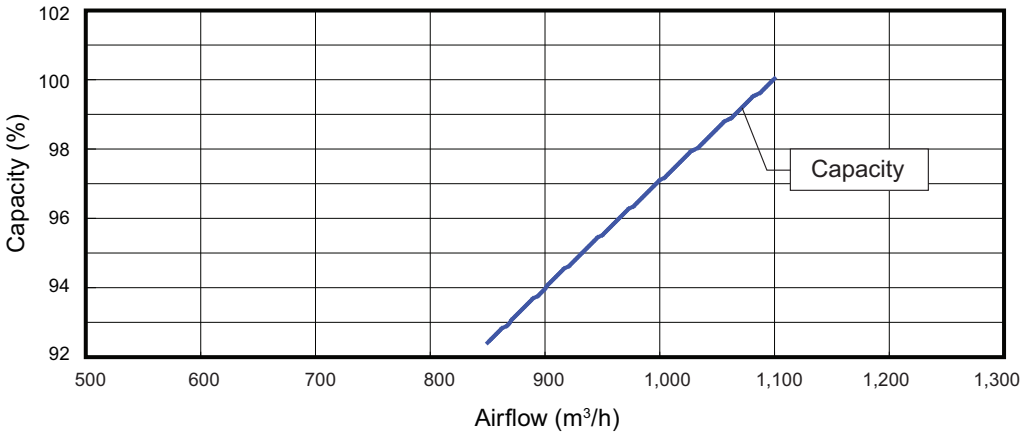

DUCT TYPE
ARHG24-45KMLA

■ Model: ARXG30KMLA (Normal mode)

			Static pressure (Pa)							
			7	10	13	19	21	30	34	47
Fan speed	HIGH (Heating)	m3/h	—	—	—	—	—	2,270	2,240	2,100
		l/s	—	—	—	—	—	631	622	583
		CFM	—	—	—	—	—	1,336	1,318	1,236
	HIGH (Cooling)	m3/h	—	—	—	—	—	2,050	2,020	1,900
		l/s	—	—	—	—	—	569	561	527
		CFM	—	—	—	—	—	1,207	1,189	1,118
	MED	m3/h	—	—	—	—	1,685	1,585	1,540	—
		l/s	—	—	—	—	468	440	428	—
		CFM	—	—	—	—	992	933	906	—
	LOW	m3/h	—	—	1,325	1,250	1,220	—	—	—
		l/s	—	—	368	347	339	—	—	—
		CFM	—	—	780	736	718	—	—	—
	QUIET	m3/h	1,020	995	960	—	—	—	—	—
		l/s	283	276	267	—	—	—	—	—
		CFM	600	586	565	—	—	—	—	—

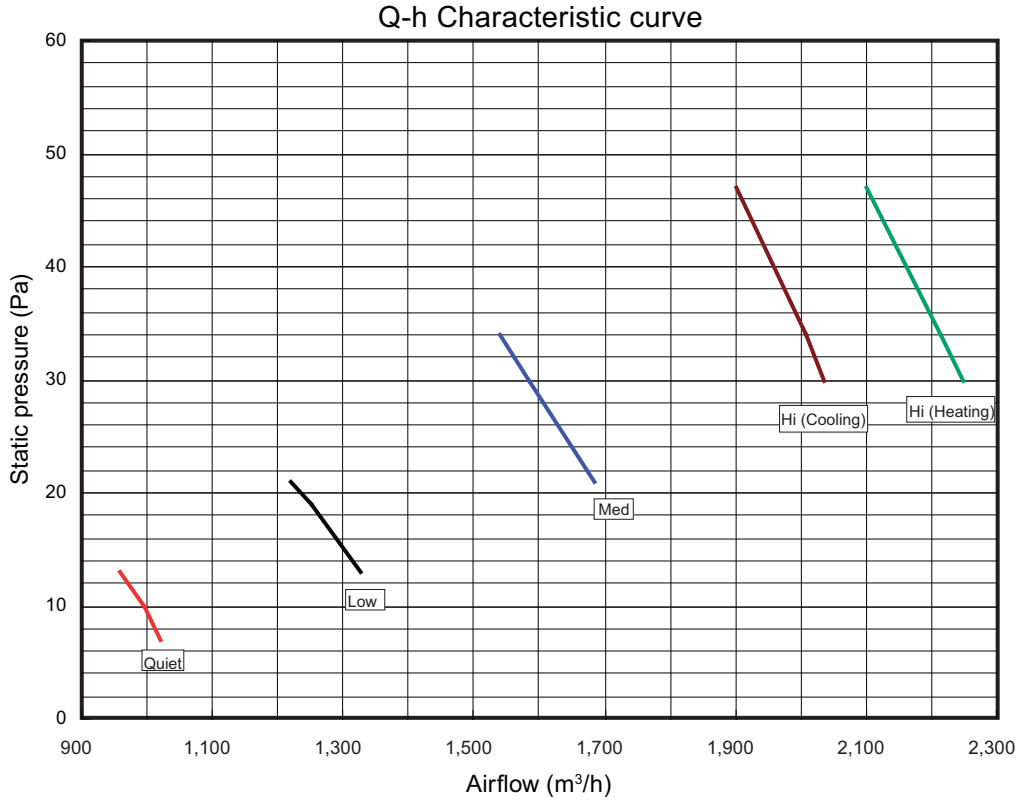

DUCT TYPE
ARHG24-45KMLA

- **Cooling**

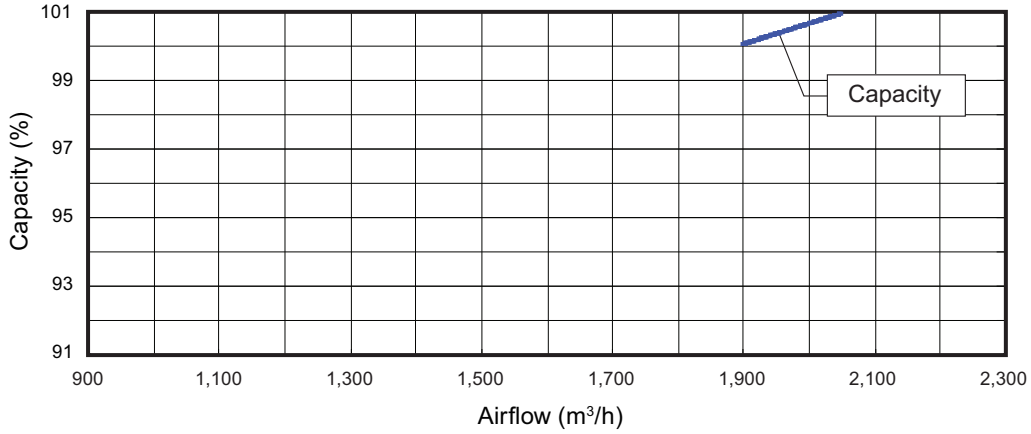

- **Heating**

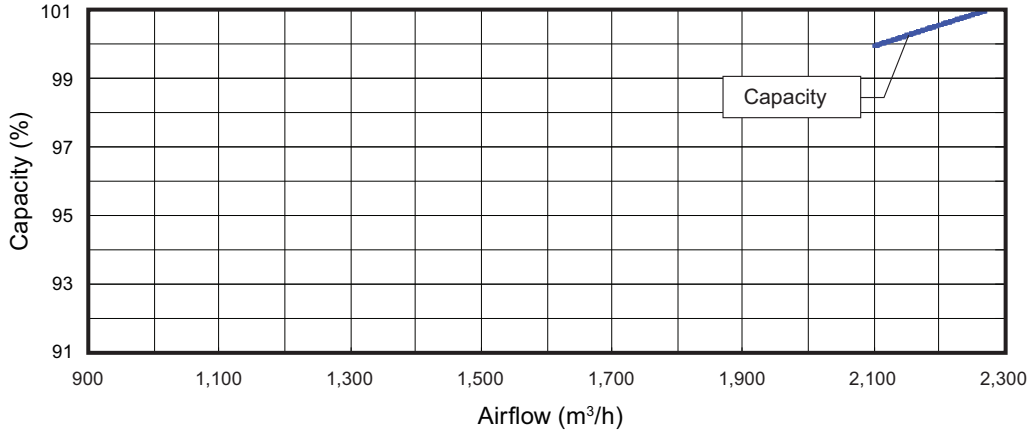

DUCT TYPE
ARHG24-45KMLA

■ Model: ARXG30KMLA (Static pressure mode 1)

			Static pressure (Pa)							
			17	26	32	38	45	55	64	80
Fan speed	HIGH	m3/h	—	—	—	—	—	1,950	1,860	1,700
		l/s	—	—	—	—	—	542	517	472
		CFM	—	—	—	—	—	1,148	1,095	1,001
	MED	m3/h	—	—	—	—	1,730	1,620	1,520	—
		l/s	—	—	—	—	481	450	422	—
		CFM	—	—	—	—	1,018	953	895	—
	LOW	m3/h	—	1,340	1,265	1,190	—	—	—	—
		l/s	—	372	351	331	—	—	—	—
		CFM	—	789	745	700	—	—	—	—
	QUIET	m3/h	1,080	970	—	—	—	—	—	—
		l/s	300	269	—	—	—	—	—	—
		CFM	636	571	—	—	—	—	—	—

Q-h Characteristic curve

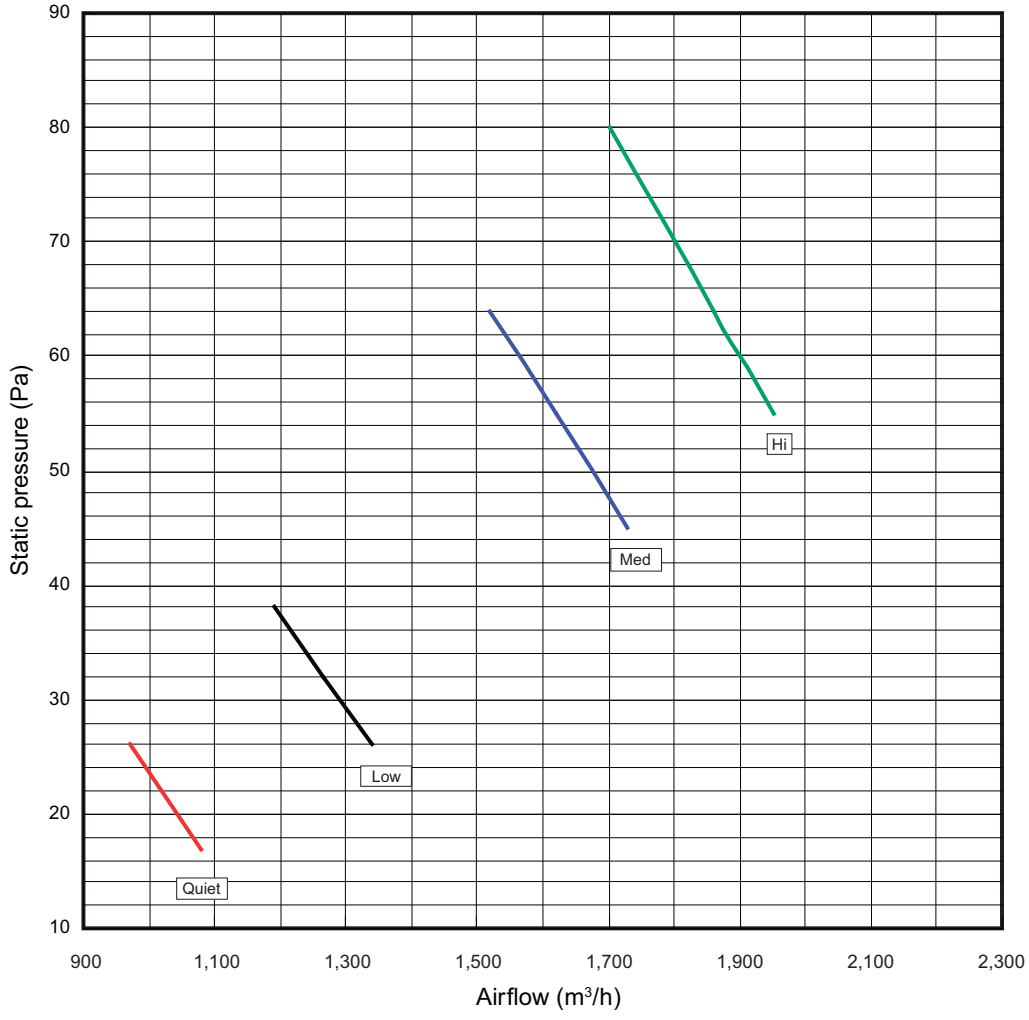

DUCT TYPE
ARHG24-45KMLA

- **Cooling**

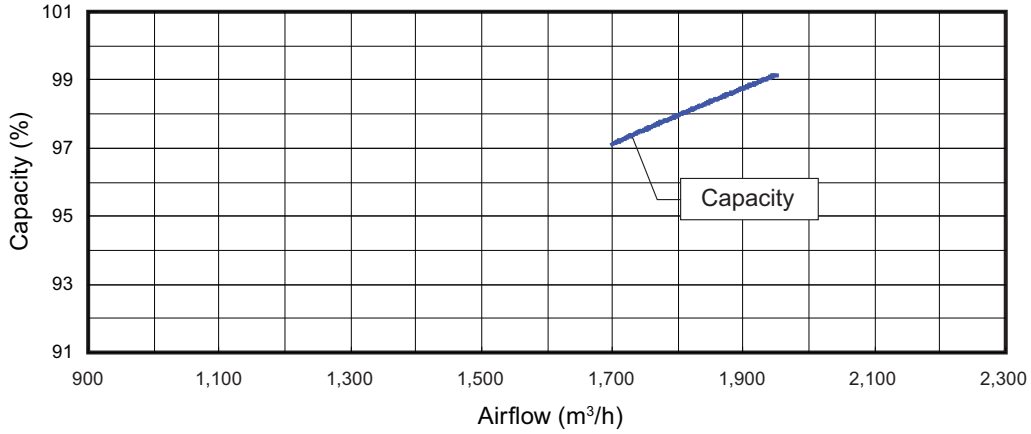

- **Heating**

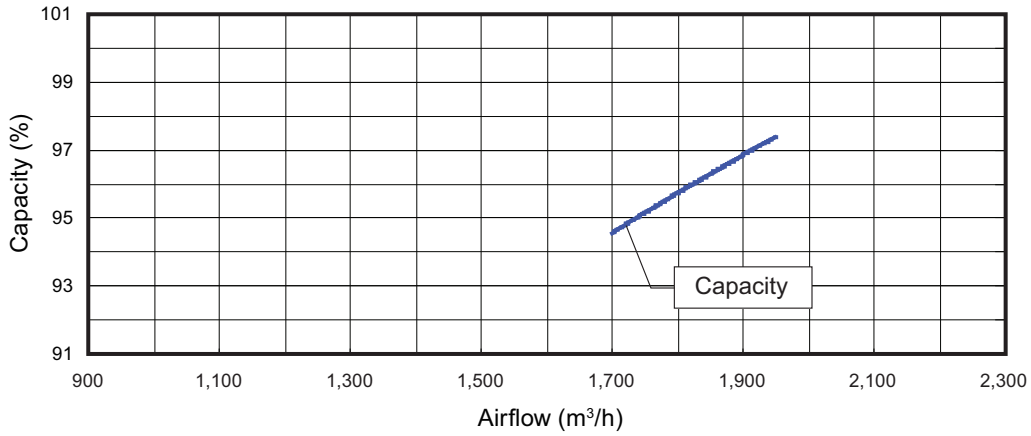

DUCT TYPE
ARHG24-45KMLA

■ Model: ARXG30KMLA (Static pressure mode 2)

			Static pressure (Pa)							
			33	40	49	60	70	85	93	112
Fan speed	HIGH	m3/h	—	—	—	—	—	—	1,850	1,600
		l/s	—	—	—	—	—	—	514	444
		CFM	—	—	—	—	—	—	1,089	942
	MED	m3/h	—	—	—	—	1,600	1,400	—	—
		l/s	—	—	—	—	444	389	—	—
		CFM	—	—	—	—	942	824	—	—
	LOW	m3/h	—	—	1,340	1,180	—	—	—	—
		l/s	—	—	372	328	—	—	—	—
		CFM	—	—	789	695	—	—	—	—
	QUIET	m3/h	1,090	960	—	—	—	—	—	—
		l/s	303	267	—	—	—	—	—	—
		CFM	642	565	—	—	—	—	—	—

Q-h Characteristic curve

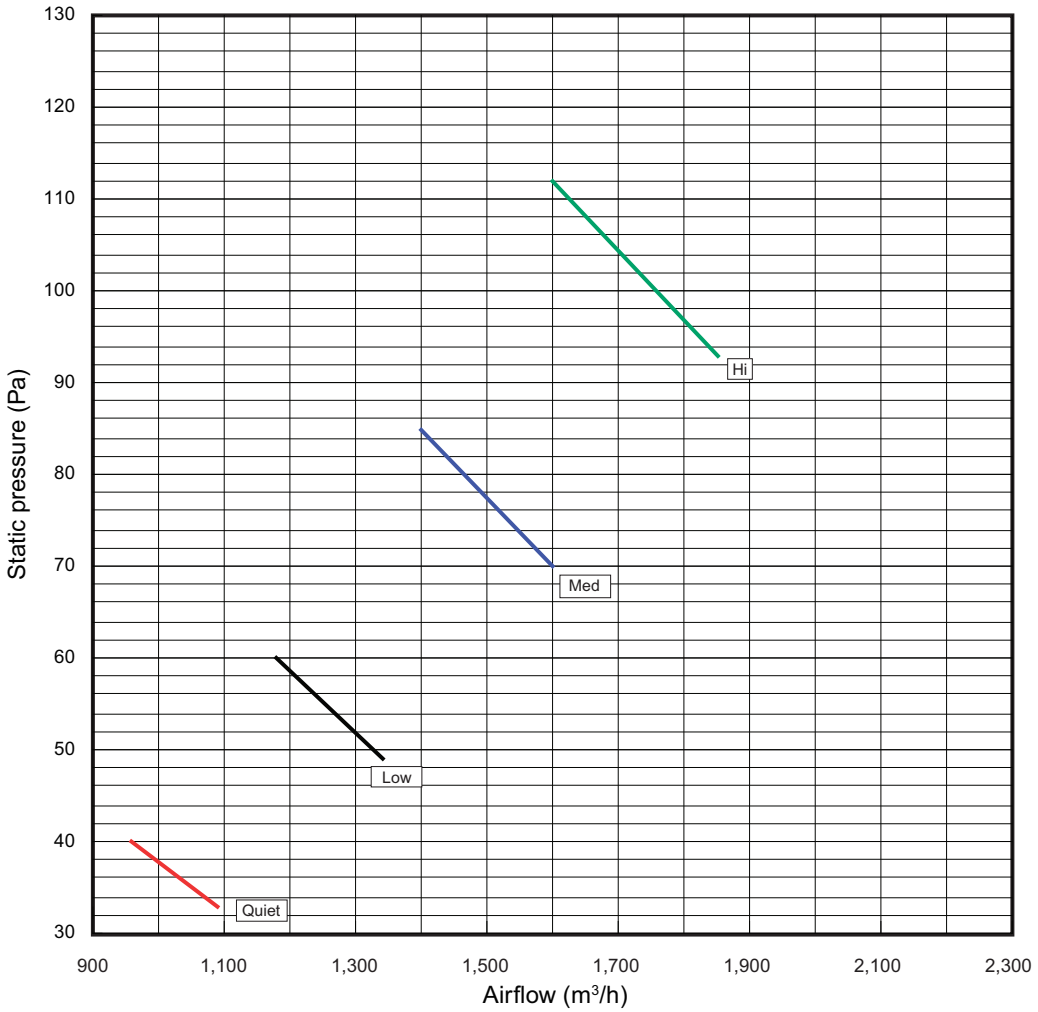

DUCT TYPE
ARHG24-45KMLA

- **Cooling**

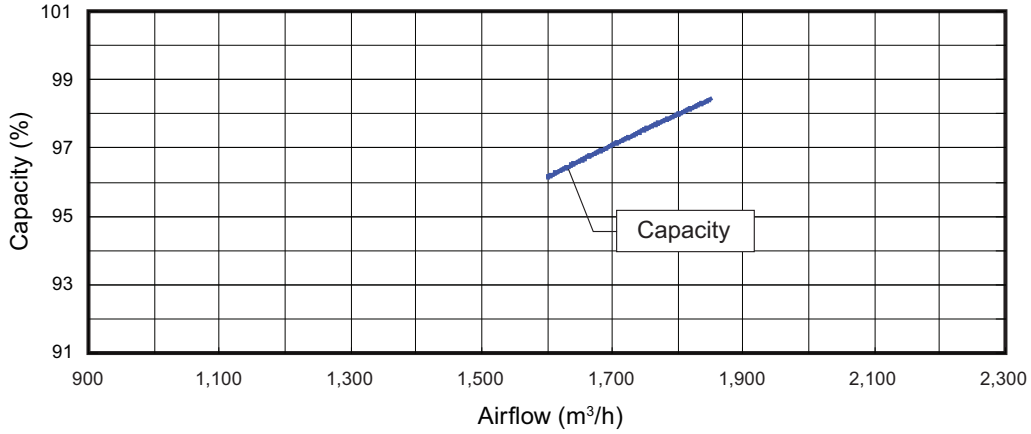

- **Heating**

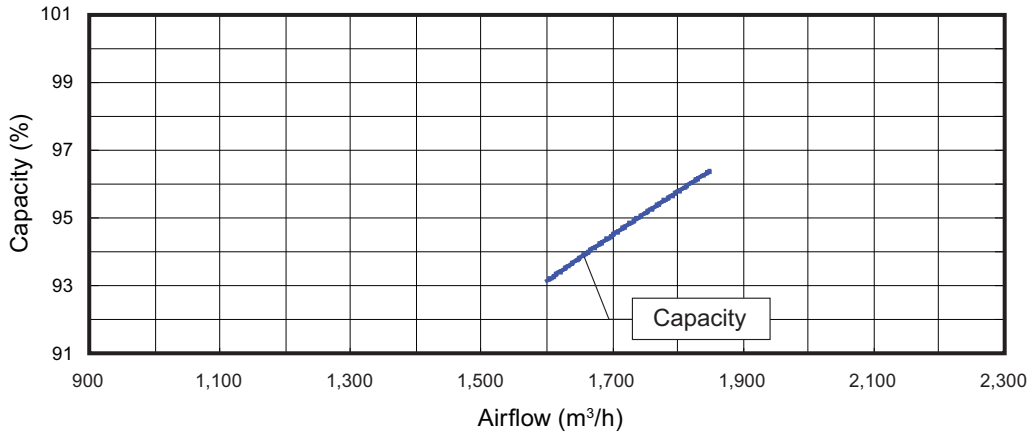

DUCT TYPE
ARHG24-45KMLA

■ Model: ARXG30KMLA (Static pressure mode 3)

			Static pressure (Pa)							
			55	63	77	89	102	117	130	150
Fan speed	HIGH	m3/h	—	—	—	—	—	—	1,730	1,500
		l/s	—	—	—	—	—	—	481	417
		CFM	—	—	—	—	—	—	1,018	883
	MED	m3/h	—	—	—	—	1,530	1,310	—	—
		l/s	—	—	—	—	425	364	—	—
		CFM	—	—	—	—	901	771	—	—
	LOW	m3/h	—	—	1,330	1,140	—	—	—	—
		l/s	—	—	369	317	—	—	—	—
		CFM	—	—	783	671	—	—	—	—
	QUIET	m3/h	1,110	960	—	—	—	—	—	—
		l/s	308	267	—	—	—	—	—	—
		CFM	653	565	—	—	—	—	—	—

Q-h Characteristic curve

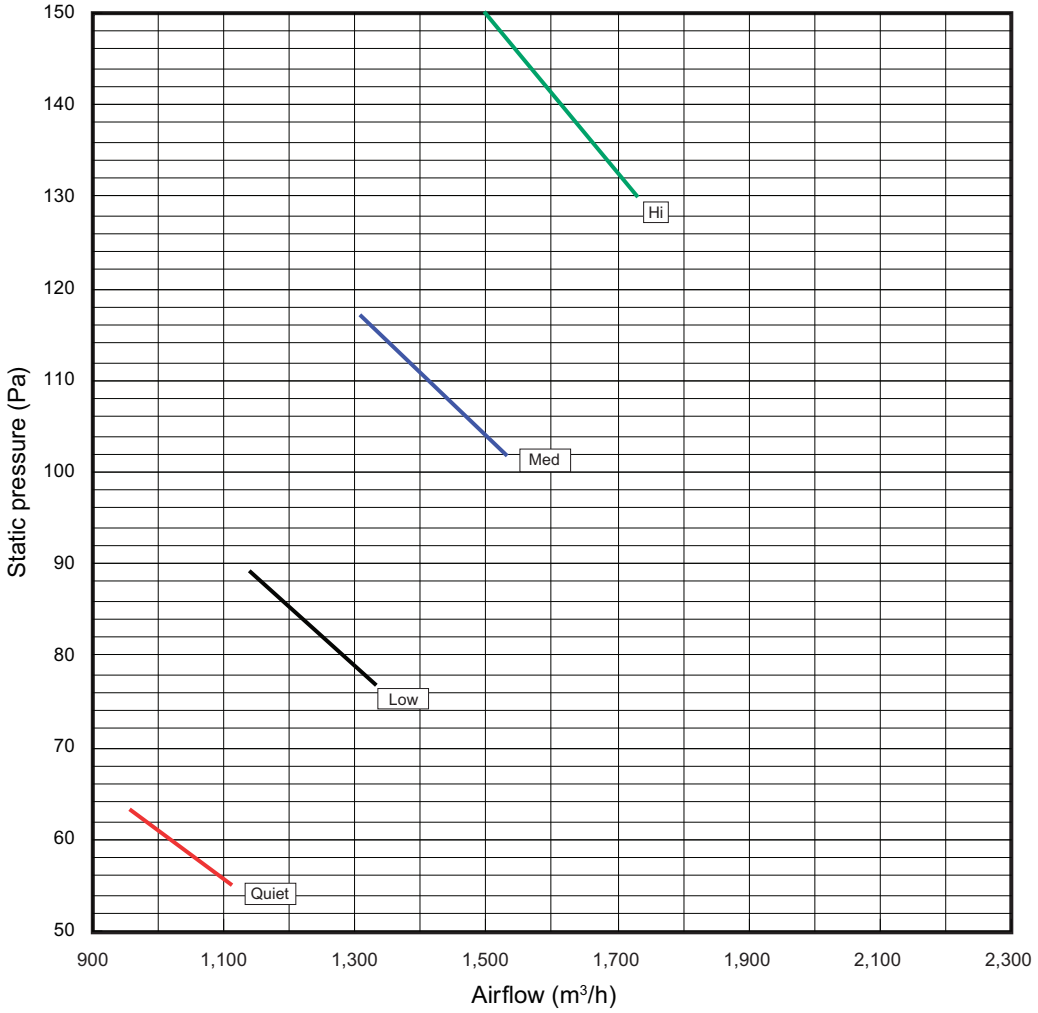

DUCT TYPE
ARHG24-45KMLA

- **Cooling**

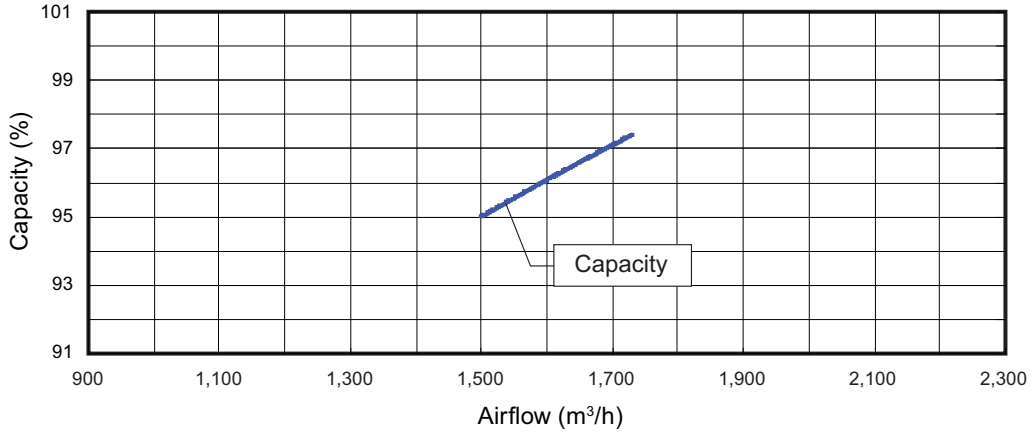

- **Heating**

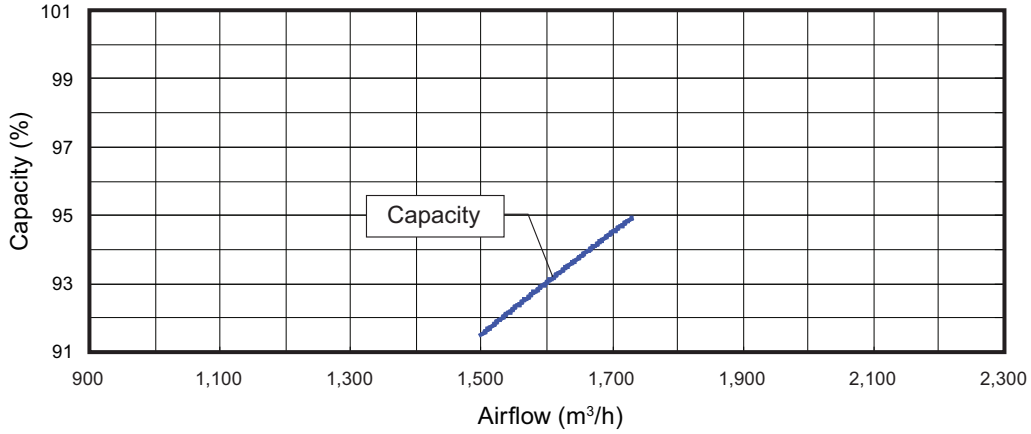

DUCT TYPE
ARHG24-45KMLA

■ Model: ARXG36KMLA (Normal mode)

			Static pressure (Pa)							
			7	10	13	19	21	30	34	47
Fan speed	HIGH (Heating)	m3/h	—	—	—	—	—	2,270	2,240	2,100
		l/s	—	—	—	—	—	631	622	583
		CFM	—	—	—	—	—	1,336	1,318	1,236
	HIGH (Cooling)	m3/h	—	—	—	—	—	2,050	2,020	1,900
		l/s	—	—	—	—	—	569	561	527
		CFM	—	—	—	—	—	1,207	1,189	1,118
	MED	m3/h	—	—	—	—	1,685	1,585	1,540	—
		l/s	—	—	—	—	468	440	428	—
		CFM	—	—	—	—	992	933	906	—
	LOW	m3/h	—	—	1,325	1,250	1,220	—	—	—
		l/s	—	—	368	347	339	—	—	—
		CFM	—	—	780	736	718	—	—	—
	QUIET	m3/h	1,020	995	960	—	—	—	—	—
		l/s	283	276	267	—	—	—	—	—
		CFM	600	586	565	—	—	—	—	—

Q-h Characteristic curve

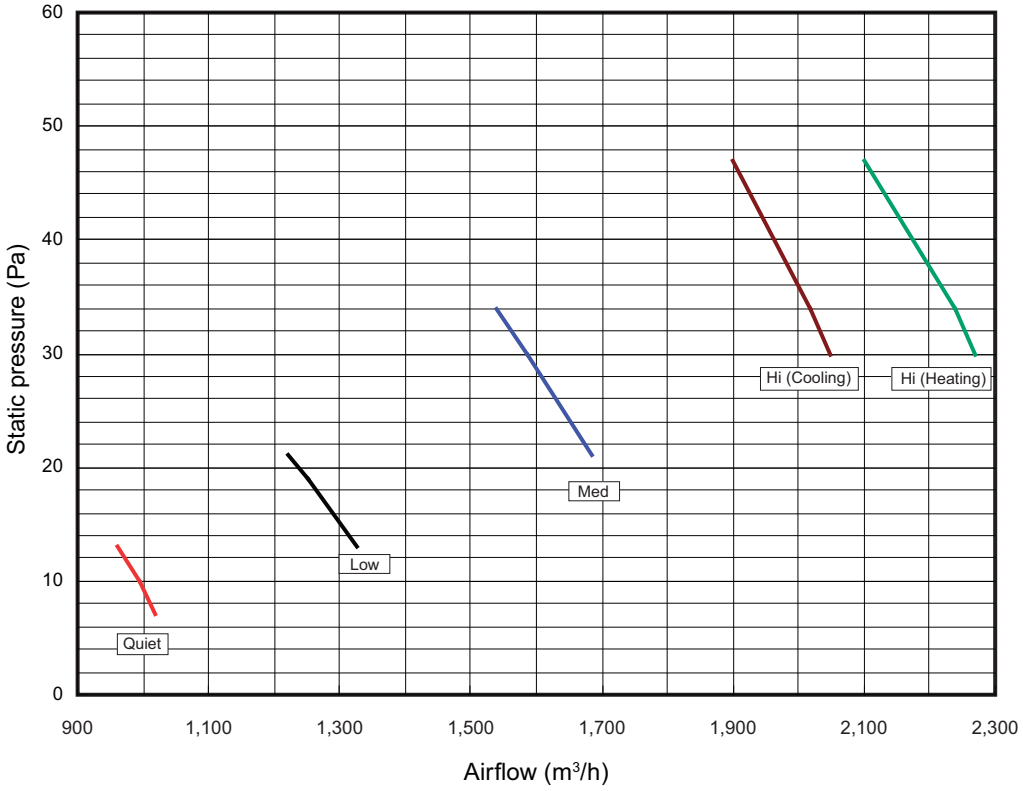

DUCT TYPE
ARHG24-45KMLA

- **Cooling**

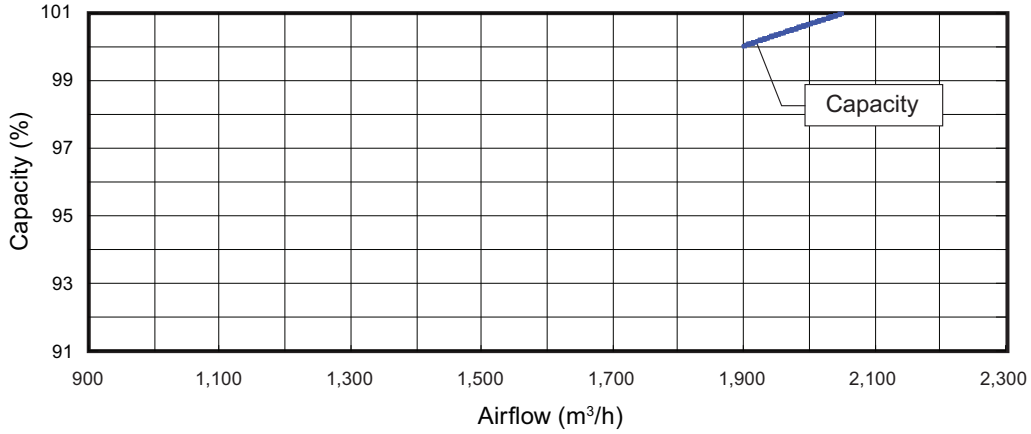

- **Heating**

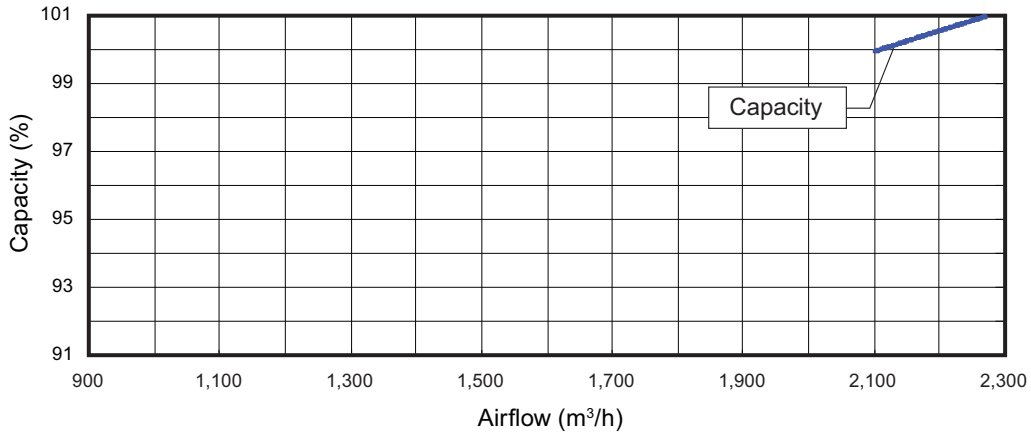

DUCT TYPE
ARHG24-45KMLA

■ Model: ARXG36KMLA (Static pressure mode 1)

			Static pressure (Pa)							
			17	26	32	38	45	55	64	80
Fan speed	HIGH	m3/h	—	—	—	—	—	1,950	1,860	1,700
		l/s	—	—	—	—	—	542	517	472
		CFM	—	—	—	—	—	1,148	1,095	1,001
	MED	m3/h	—	—	—	—	1,730	1,620	1,520	—
		l/s	—	—	—	—	481	450	422	—
		CFM	—	—	—	—	1,018	953	895	—
	LOW	m3/h	—	1,340	1,265	1,190	—	—	—	—
		l/s	—	372	351	331	—	—	—	—
		CFM	—	789	745	700	—	—	—	—
	QUIET	m3/h	1,080	970	—	—	—	—	—	—
		l/s	300	269	—	—	—	—	—	—
		CFM	636	571	—	—	—	—	—	—

Q-h Characteristic curve

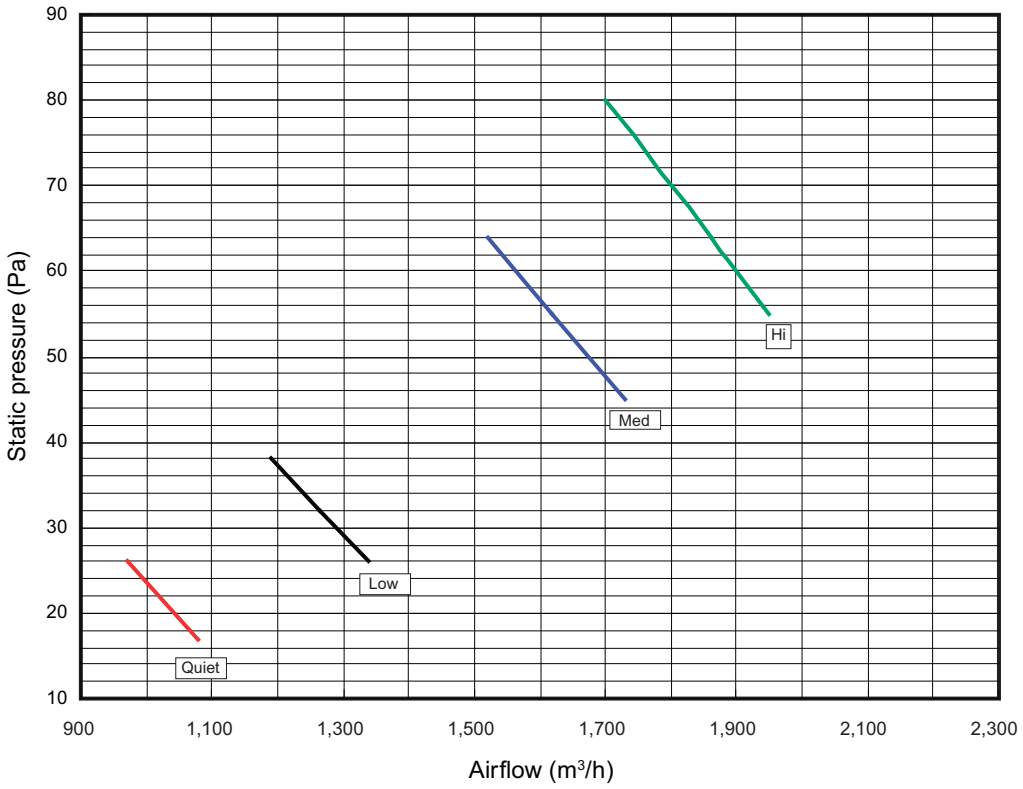

DUCT TYPE
ARHG24-45KMLA

- **Cooling**

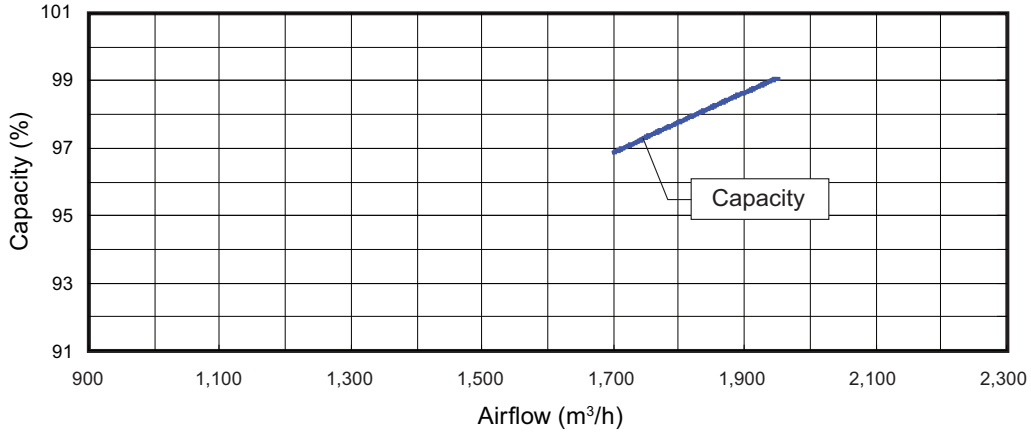

- **Heating**

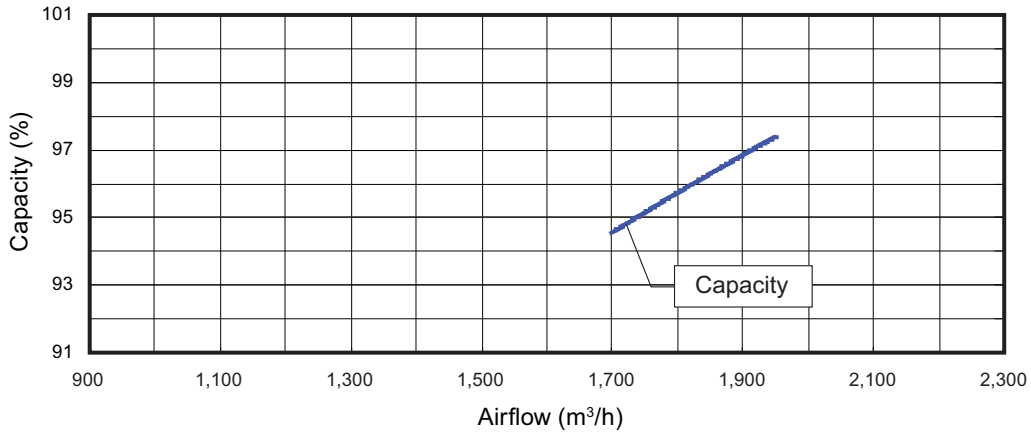

DUCT TYPE
ARHG24-45KMLA

■ Model: ARXG36KMLA (Static pressure mode 2)

			Static pressure (Pa)							
			33	**40**	**49**	**60**	**70**	**85**	**93**	**112**
Fan speed	HIGH	m3/h	—	—	—	—	—	—	1,850	1,600
		l/s	—	—	—	—	—	—	514	444
		CFM	—	—	—	—	—	—	1,089	942
	MED	m3/h	—	—	—	—	1,600	1,400	—	—
		l/s	—	—	—	—	444	389	—	—
		CFM	—	—	—	—	942	824	—	—
	LOW	m3/h	—	—	1,340	1,180	—	—	—	—
		l/s	—	—	372	328	—	—	—	—
		CFM	—	—	789	695	—	—	—	—
	QUIET	m3/h	1,090	960	—	—	—	—	—	—
		l/s	303	267	—	—	—	—	—	—
		CFM	642	565	—	—	—	—	—	—

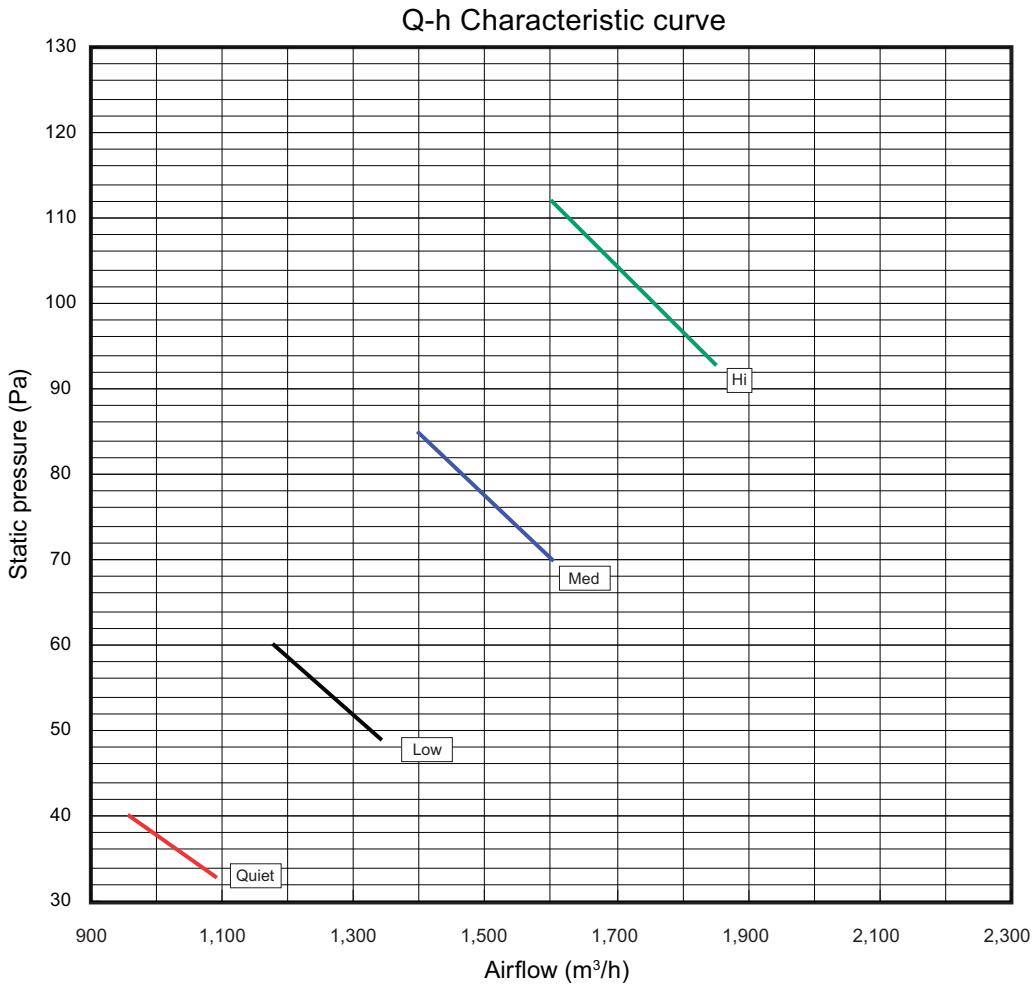

DUCT TYPE
ARHG24-45KMLA

- **Cooling**

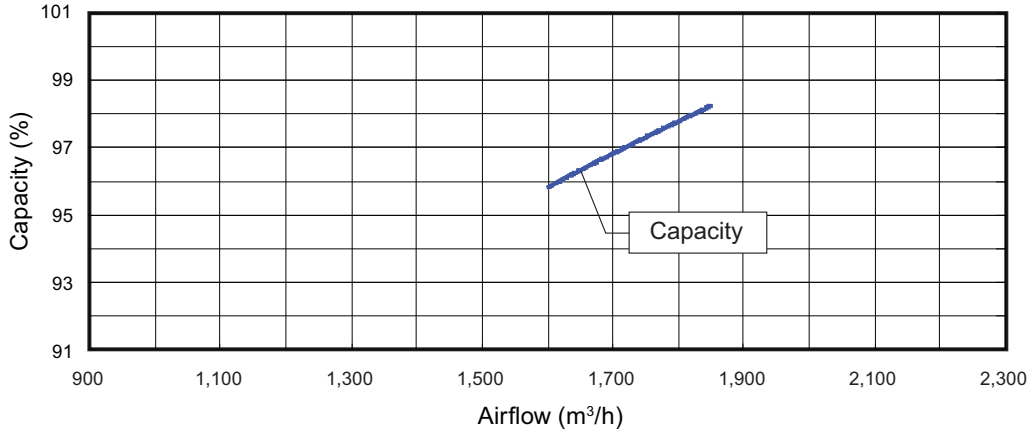

- **Heating**

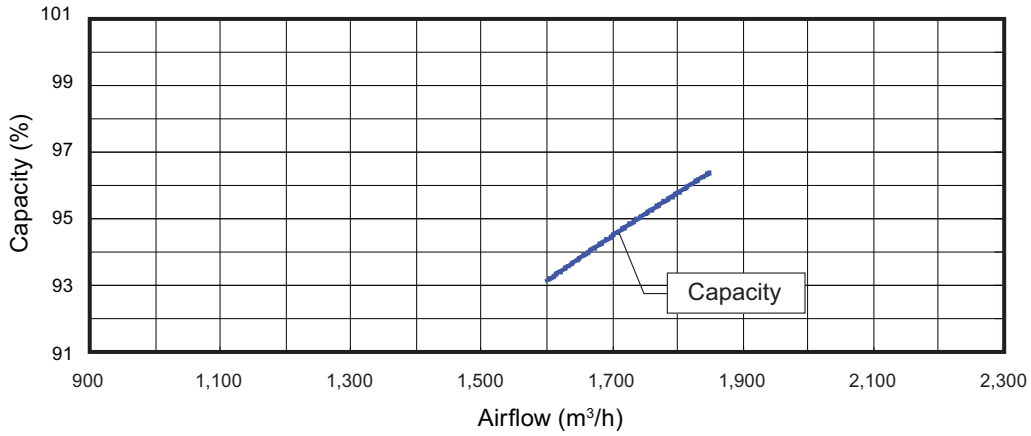

DUCT TYPE
ARHG24-45KMLA

■ Model: ARXG36KMLA (Static pressure mode 3)

			Static pressure (Pa)							
			55	**63**	**77**	**89**	**102**	**117**	**130**	**150**
Fan speed	HIGH	m3/h	—	—	—	—	—	—	1,730	1,500
		l/s	—	—	—	—	—	—	481	417
		CFM	—	—	—	—	—	—	1,018	883
	MED	m3/h	—	—	—	—	1,530	1,310	—	—
		l/s	—	—	—	—	425	364	—	—
		CFM	—	—	—	—	901	771	—	—
	LOW	m3/h	—	—	1,330	1,140	—	—	—	—
		l/s	—	—	369	317	—	—	—	—
		CFM	—	—	783	671	—	—	—	—
	QUIET	m3/h	1,110	960	—	—	—	—	—	—
		l/s	308	267	—	—	—	—	—	—
		CFM	653	565	—	—	—	—	—	—

Q-h Characteristic curve

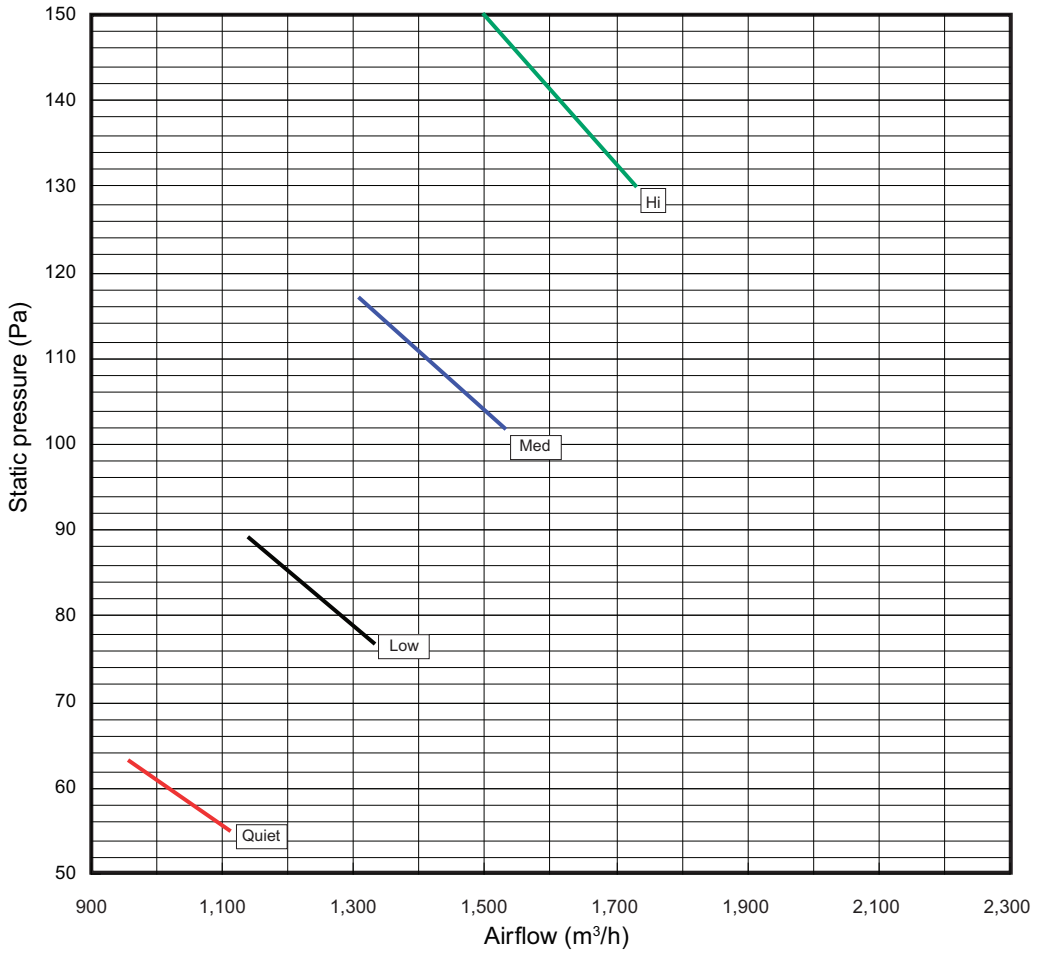

DUCT TYPE
ARHG24-45KMLA

- **Cooling**

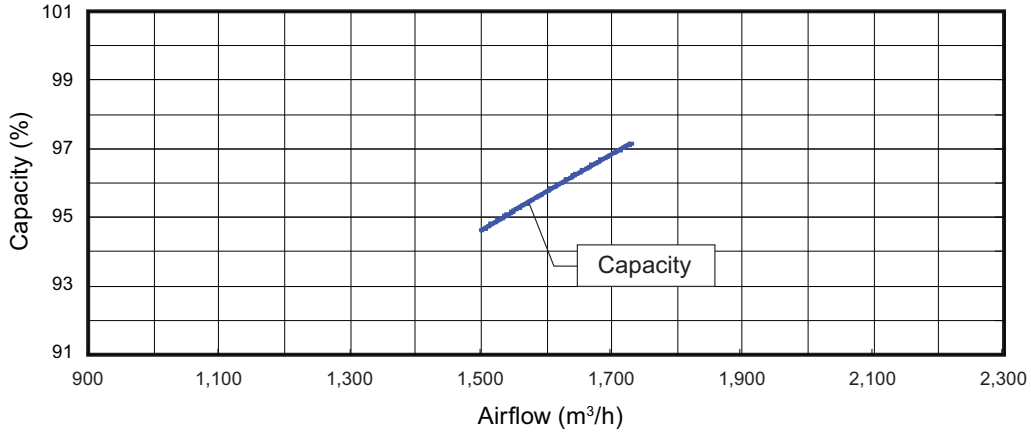

- **Heating**

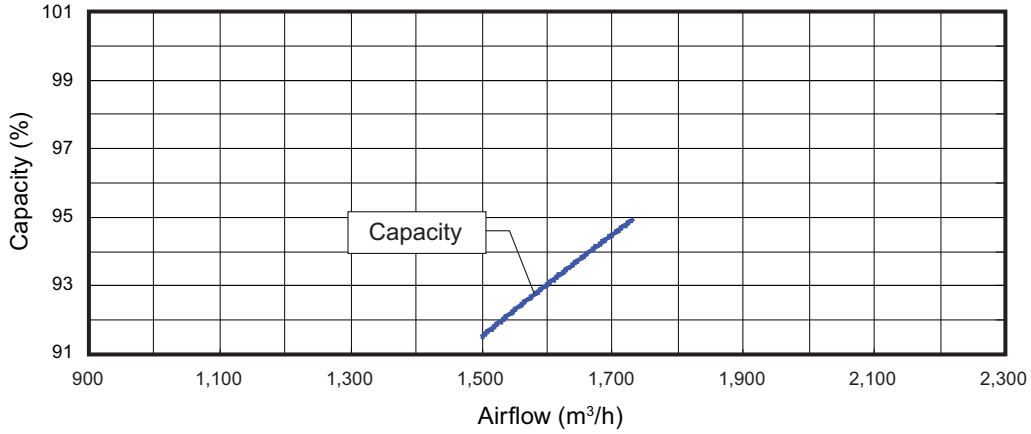

DUCT TYPE
ARHG24-45KMLA

■ Model: ARXG45KMLA (Normal mode)

			Static pressure (Pa)							
			7	10	13	19	21	30	34	57
Fan speed	HIGH	m3/h	—	—	—	—	—	2,250	2,223	2,010
		l/s	—	—	—	—	—	625	618	558
		CFM	—	—	—	—	—	1,324	1,308	1,183
	MED	m3/h	—	—	—	1,710	1,685	1,585	1,540	—
		l/s	—	—	—	475	468	440	428	—
		CFM	—	—	—	1,006	992	933	906	—
	LOW	m3/h	—	—	1,325	1,250	1,220	—	—	—
		l/s	—	—	368	347	339	—	—	—
		CFM	—	—	780	736	718	—	—	—
	QUIET	m3/h	1,020	995	960	—	—	—	—	—
		l/s	283	276	267	—	—	—	—	—
		CFM	600	586	565	—	—	—	—	—

Q-h Characteristic curve

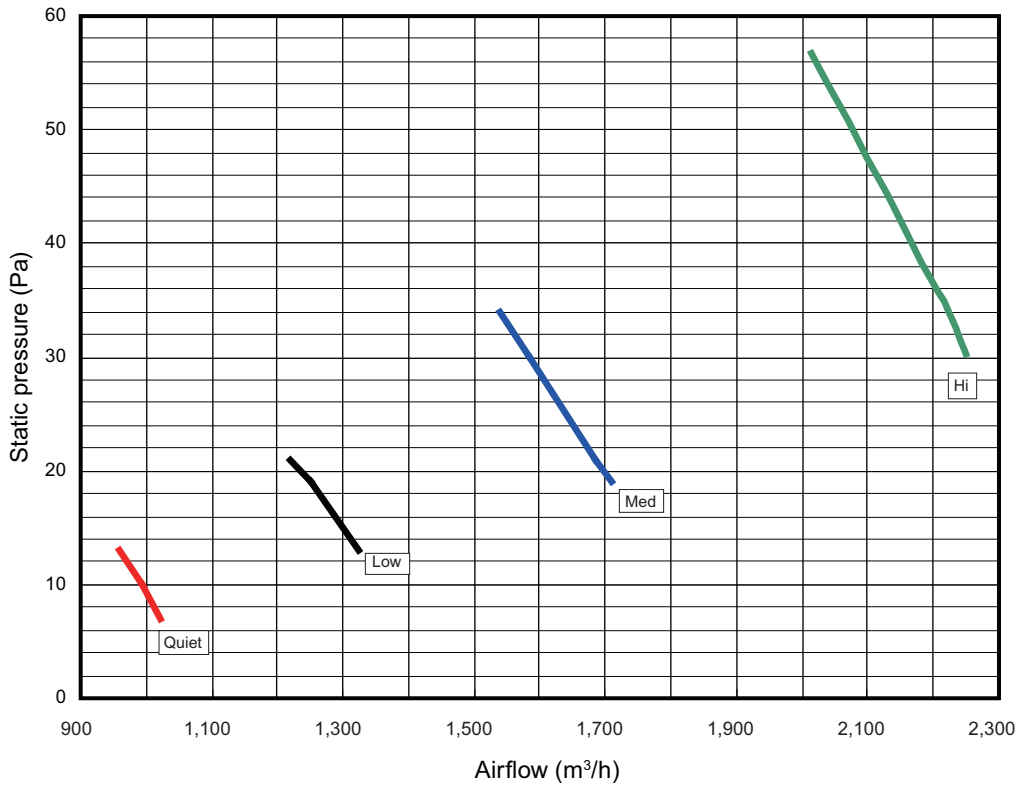

DUCT TYPE
ARHG24-45KMLA

- **Cooling**

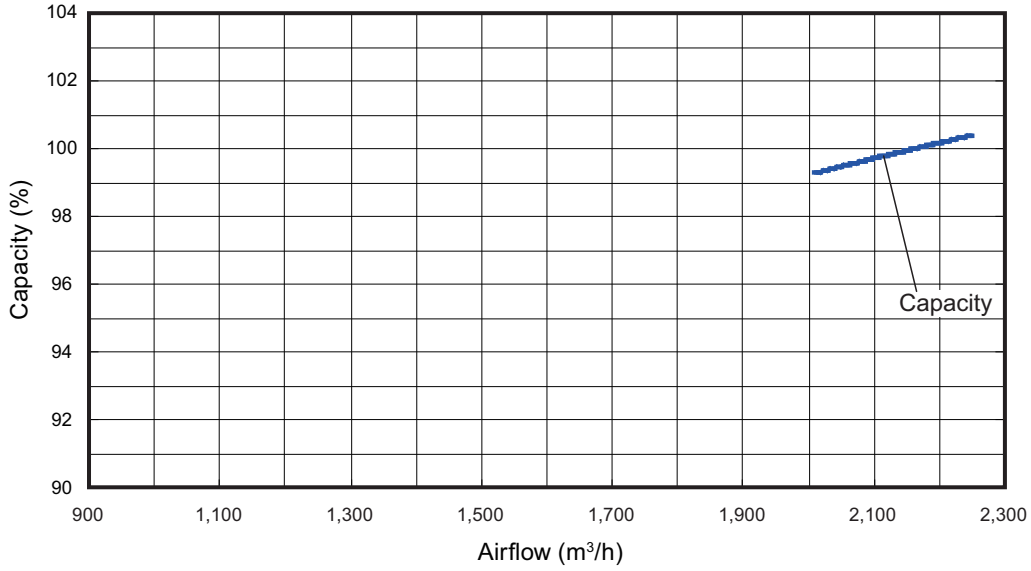

- **Heating**

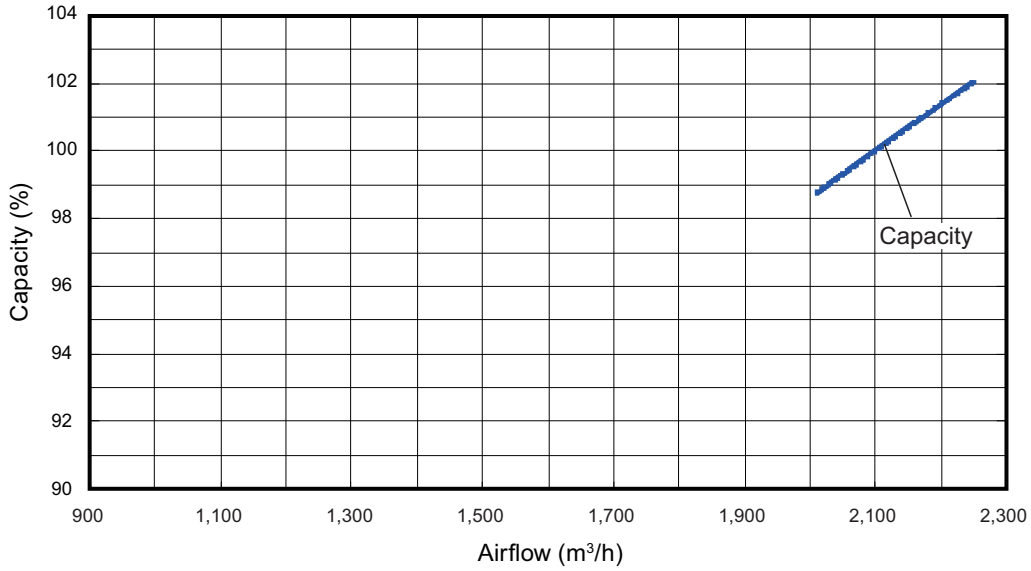

DUCT TYPE
ARHG24-45KMLA

■ Model: ARXG45KMLA (Static pressure mode 1)

			Static pressure (Pa)							
			17	26	38	43	60	63	75	90
Fan speed	HIGH	m3/h	—	—	—	—	2,100	2,075	1,970	1,810
		l/s	—	—	—	—	583	576	547	503
		CFM	—	—	—	—	1,236	1,221	1,159	1,065
	MED	m3/h	—	—	—	1,750	1,555	1,520	—	—
		l/s	—	—	—	486	432	422	—	—
		CFM	—	—	—	1,030	915	895	—	—
	LOW	m3/h	—	1,350	1,190	—	—	—	—	—
		l/s	—	375	331	—	—	—	—	—
		CFM	—	795	700	—	—	—	—	—
	QUIET	m3/h	1,070	970	—	—	—	—	—	—
		l/s	297	269	—	—	—	—	—	—
		CFM	630	571	—	—	—	—	—	—

Q-h Characteristic curve

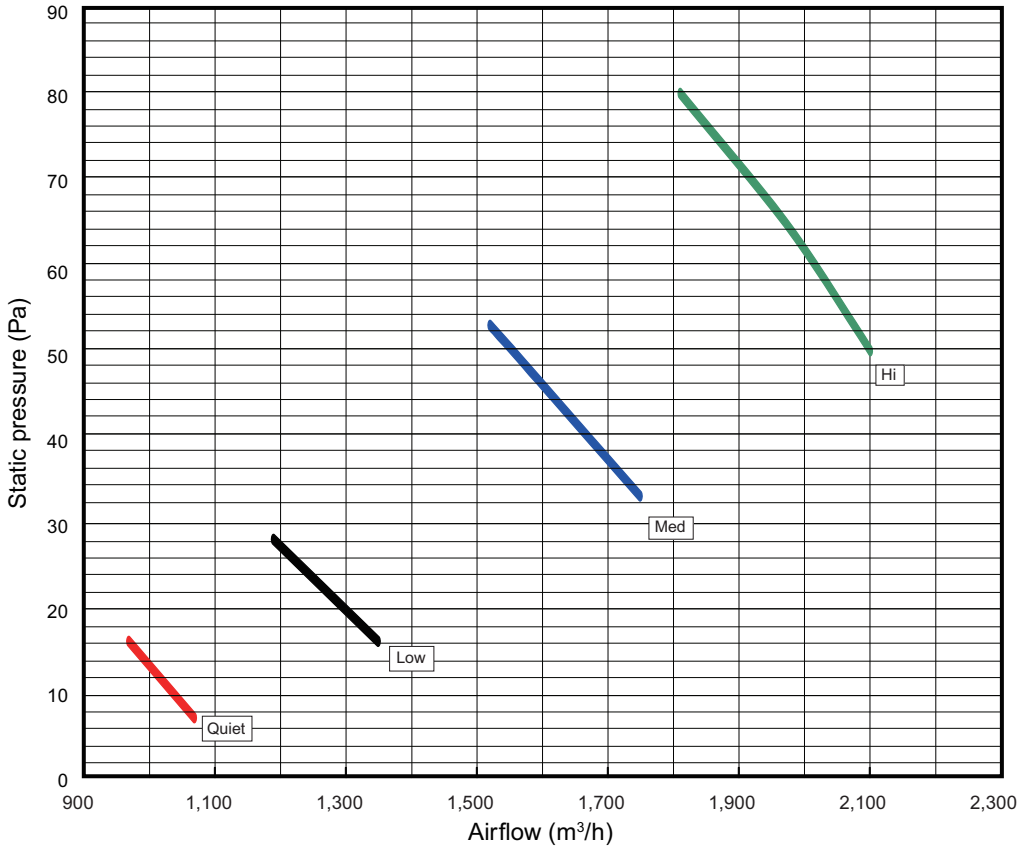

DUCT TYPE
ARHG24-45KMLA

- **Cooling**

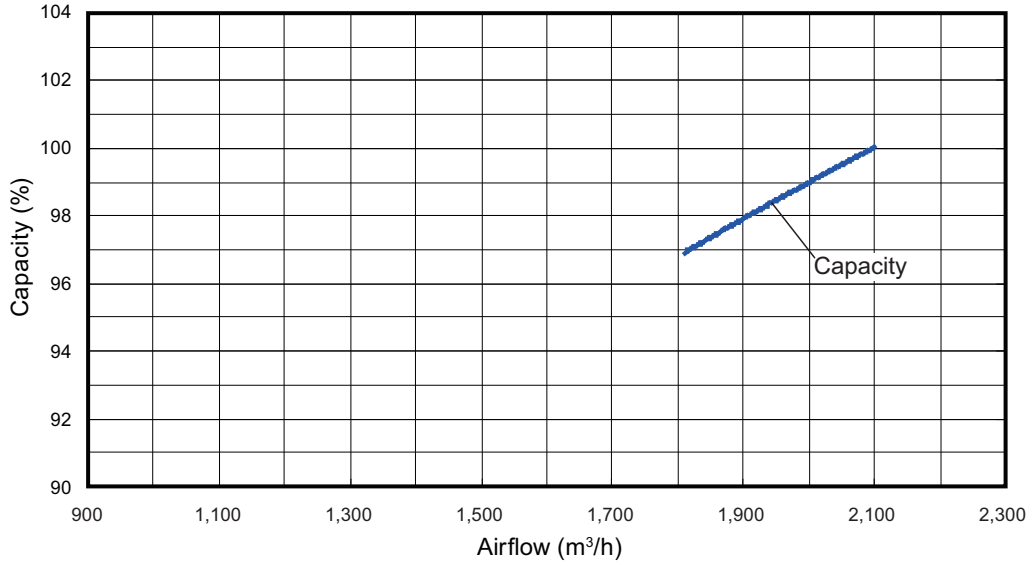

- **Heating**

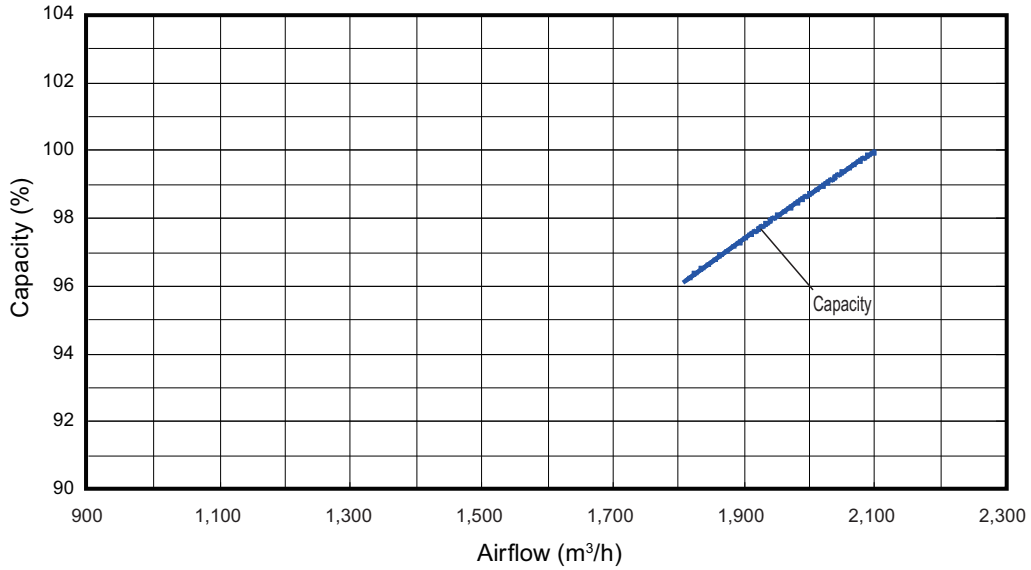

DUCT TYPE
ARHG24-45KMLA

■ Model: ARXG45KMLA (Static pressure mode 2)

			Static pressure (Pa)							
			33	**40**	**49**	**60**	**70**	**85**	**100**	**120**
Fan speed	HIGH	m3/h	—	—	—	—	—	—	1,900	1,660
		l/s	—	—	—	—	—	—	528	461
		CFM	—	—	—	—	—	—	1,118	977
	MED	m3/h	—	—	—	—	1,600	1,400	—	—
		l/s	—	—	—	—	444	389	—	—
		CFM	—	—	—	—	942	824	—	—
	LOW	m3/h	—	—	1,340	1,180	—	—	—	—
		l/s	—	—	372	328	—	—	—	—
		CFM	—	—	789	695	—	—	—	—
	QUIET	m3/h	1,090	960	—	—	—	—	—	—
		l/s	303	267	—	—	—	—	—	—
		CFM	642	565	—	—	—	—	—	—

Q-h Characteristic curve

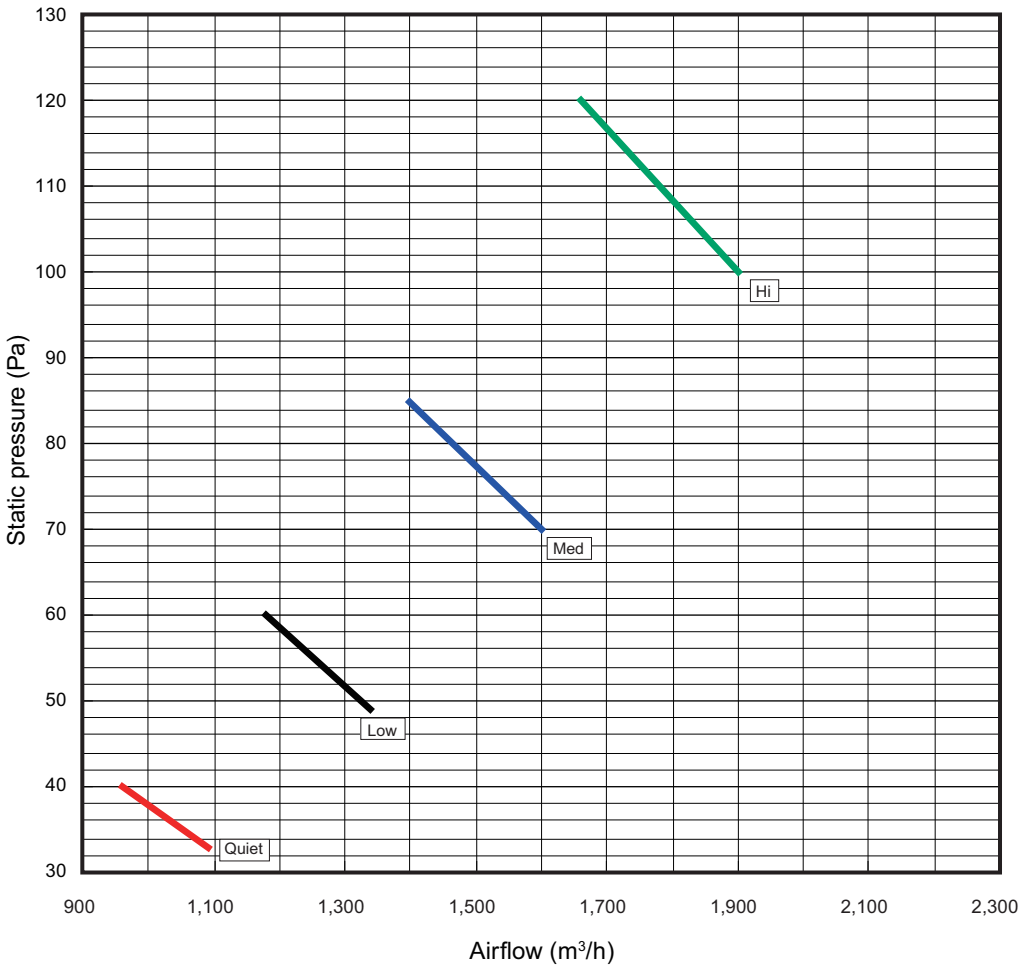

DUCT TYPE
ARHG24-45KMLA

- **Cooling**

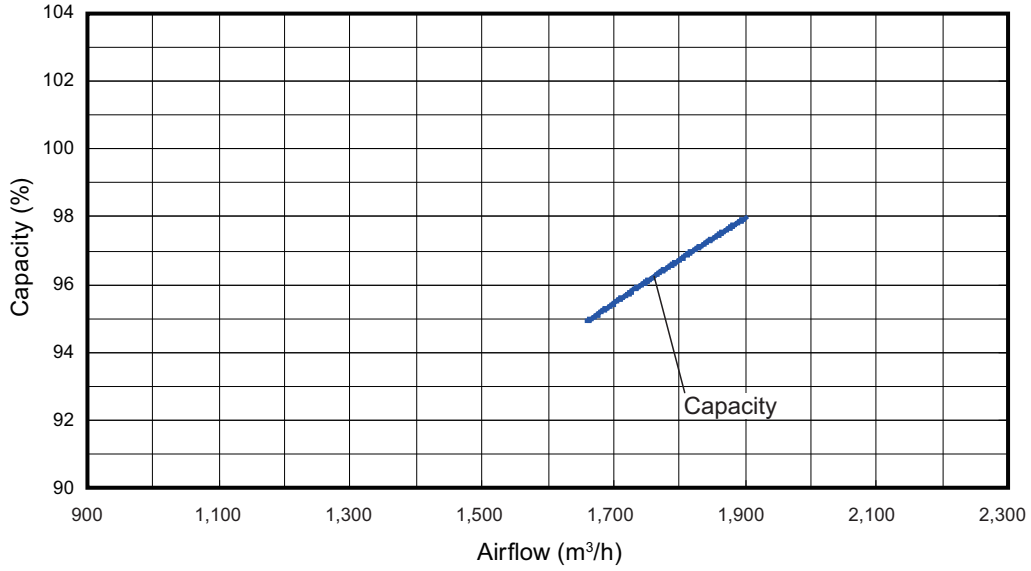

- **Heating**

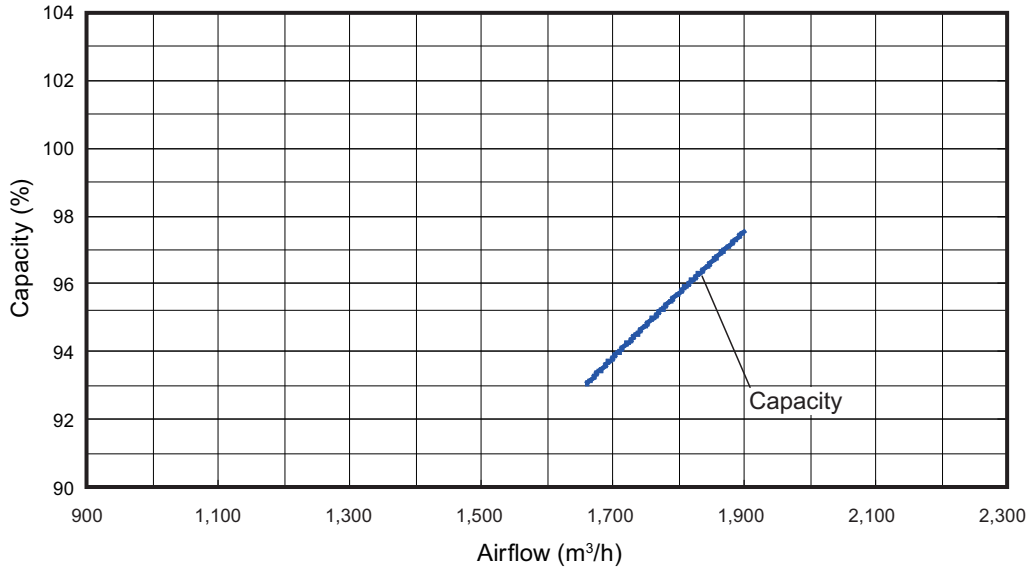

DUCT TYPE
ARHG24-45KMLA

■ Model: ARXG45KMLA (Static pressure mode 3)

			Static pressure (Pa)							
			55	**63**	**77**	**89**	**102**	**117**	**130**	**150**
Fan speed	HIGH	m3/h	—	—	—	—	—	—	1,730	1,500
		l/s	—	—	—	—	—	—	481	417
		CFM	—	—	—	—	—	—	1,018	883
	MED	m3/h	—	—	—	—	1,530	1,310	—	—
		l/s	—	—	—	—	425	364	—	—
		CFM	—	—	—	—	901	771	—	—
	LOW	m3/h	—	—	1,330	1,140	—	—	—	—
		l/s	—	—	369	317	—	—	—	—
		CFM	—	—	783	671	—	—	—	—
	QUIET	m3/h	1,110	960	—	—	—	—	—	—
		l/s	308	267	—	—	—	—	—	—
		CFM	653	565	—	—	—	—	—	—

Q-h Characteristic curve

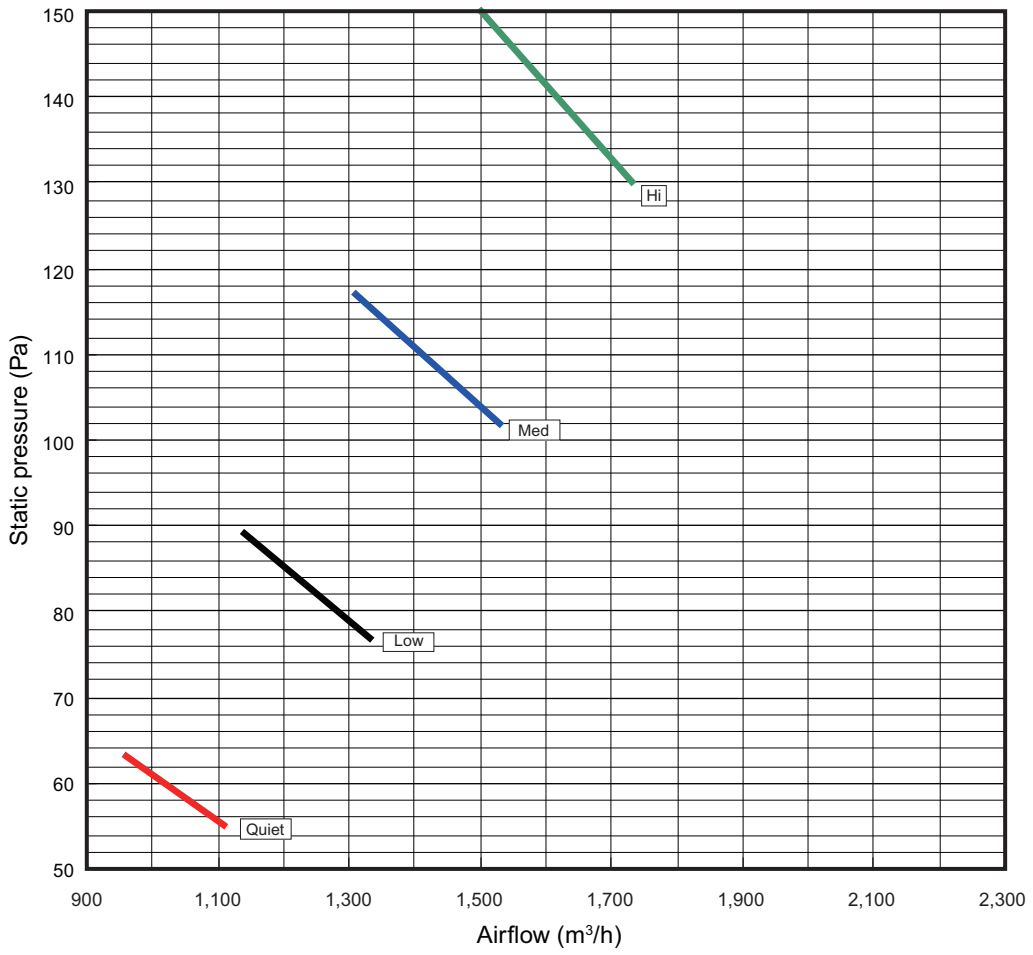

DUCT TYPE
ARHG24-45KMLA

- **Cooling**

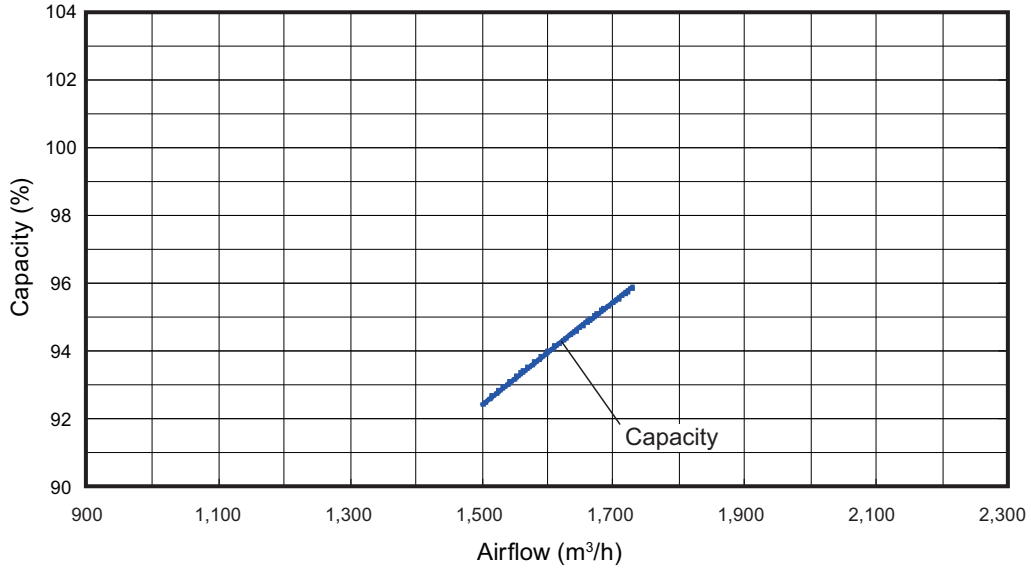

- **Heating**

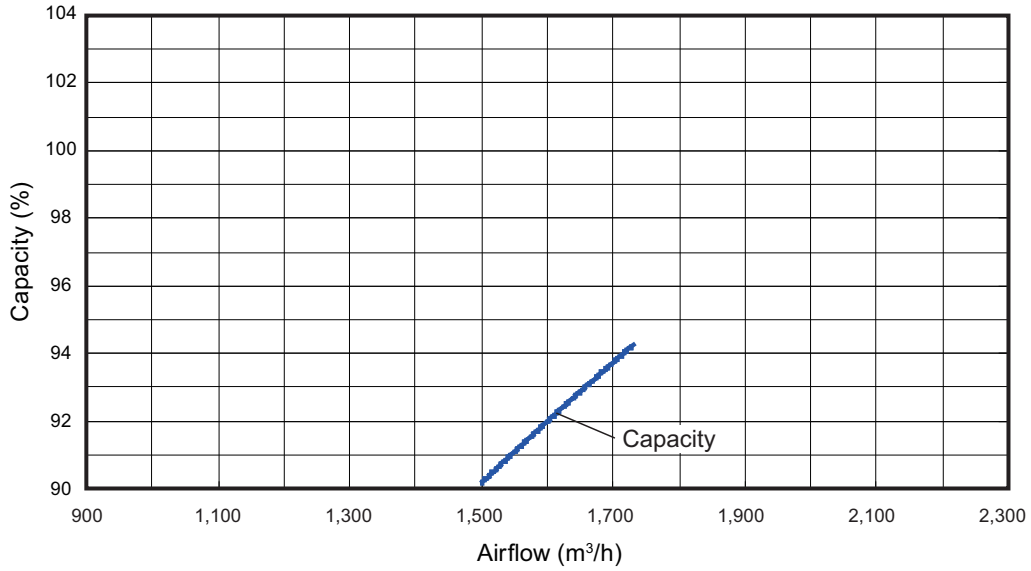

DUCT TYPE
ARHG24-45KMLA

5-2. Airflow

■ Model: ARXG24KMLA

● Cooling

Fan speed	Airflow	
HIGH	m^3/h	1,100
	l/s	306
	CFM	647
MED	m^3/h	910
	l/s	253
	CFM	536
LOW	m^3/h	750
	l/s	208
	CFM	441
QUIET	m^3/h	580
	l/s	161
	CFM	341

● Heating

Fan speed	Airflow	
HIGH	m^3/h	1,100
	l/s	306
	CFM	647
MED	m^3/h	910
	l/s	253
	CFM	536
LOW	m^3/h	750
	l/s	208
	CFM	441
QUIET	m^3/h	580
	l/s	161
	CFM	341

DUCT TYPE
ARHG24-45KMLA

■ Models: ARXG30KMLA and ARXG36KMLA

● Cooling

Fan speed	Airflow	
HIGH	m^3/h	1,900
	l/s	528
	CFM	1,118
MED	m^3/h	1,620
	l/s	450
	CFM	954
LOW	m^3/h	1,270
	l/s	353
	CFM	748
QUIET	m^3/h	980
	l/s	272
	CFM	577

● Heating

Fan speed	Airflow	
HIGH	m^3/h	2,100
	l/s	583
	CFM	1,236
MED	m^3/h	1,620
	l/s	450
	CFM	954
LOW	m^3/h	1,270
	l/s	353
	CFM	748
QUIET	m^3/h	980
	l/s	272
	CFM	577

DUCT TYPE
ARHG24-45KMLA

■ Model: ARXG45KMLA

● Cooling

Fan speed	Airflow	
HIGH	m^3/h	2,100
	l/s	583
	CFM	1,236
MED	m^3/h	1,750
	l/s	486
	CFM	1,030
LOW	m^3/h	1,350
	l/s	375
	CFM	795
QUIET	m^3/h	1,070
	l/s	297
	CFM	630

● Heating

Fan speed	Airflow	
HIGH	m^3/h	2,100
	l/s	583
	CFM	1,236
MED	m^3/h	1,750
	l/s	486
	CFM	1,030
LOW	m^3/h	1,350
	l/s	375
	CFM	795
QUIET	m^3/h	1,070
	l/s	297
	CFM	630

DUCT TYPE
ARHG24-45KMLA

6. Operation noise (sound pressure)

6-1. Noise level curve

■ Model: ARXG24KMLA

● Cooling

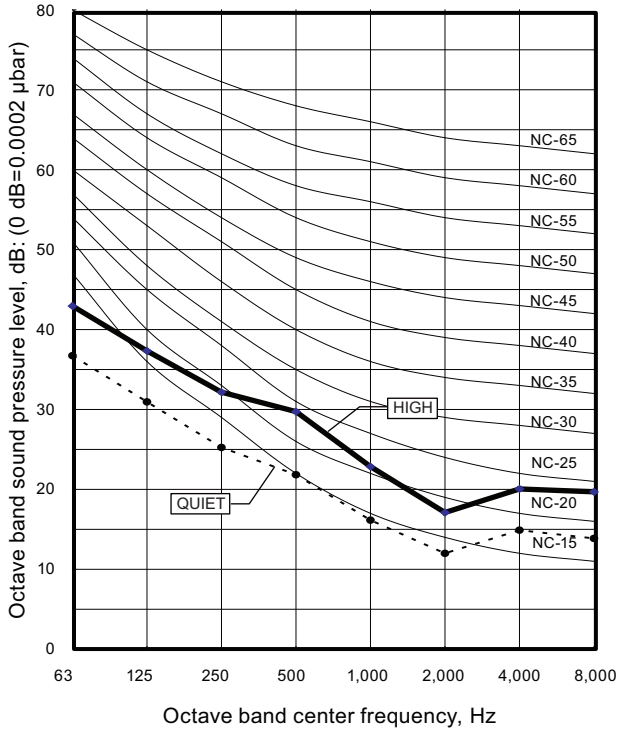

● Heating

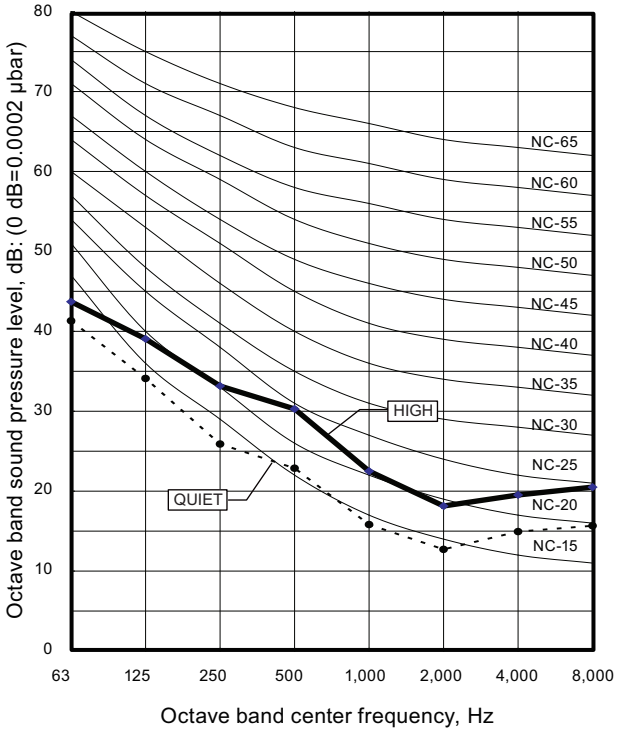

■ Model: ARXG30KMLA

● Cooling

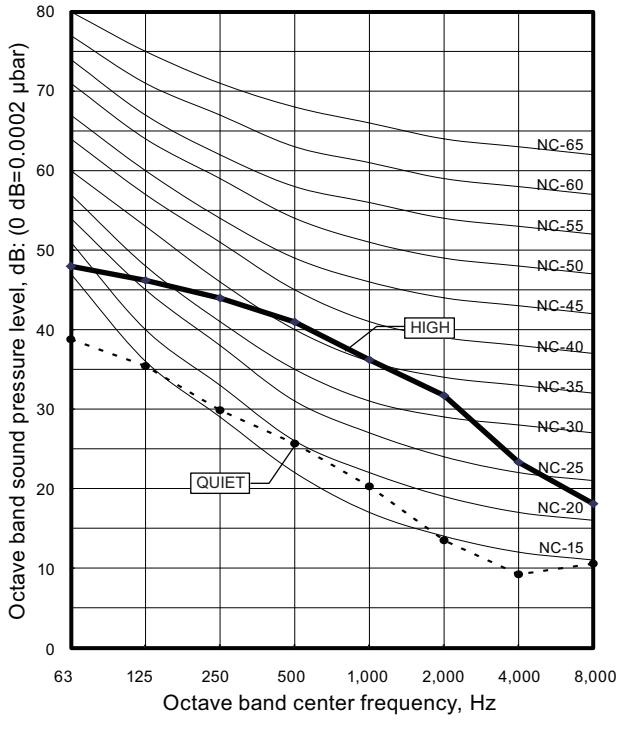

● Heating

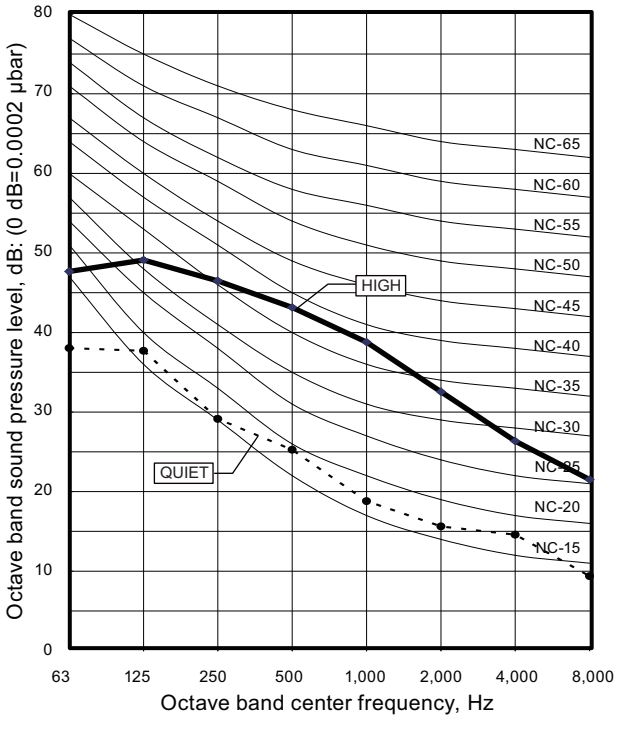

DUCT TYPE
ARHG24-45KMLA

■ Model: ARXG36KMLA

● Cooling

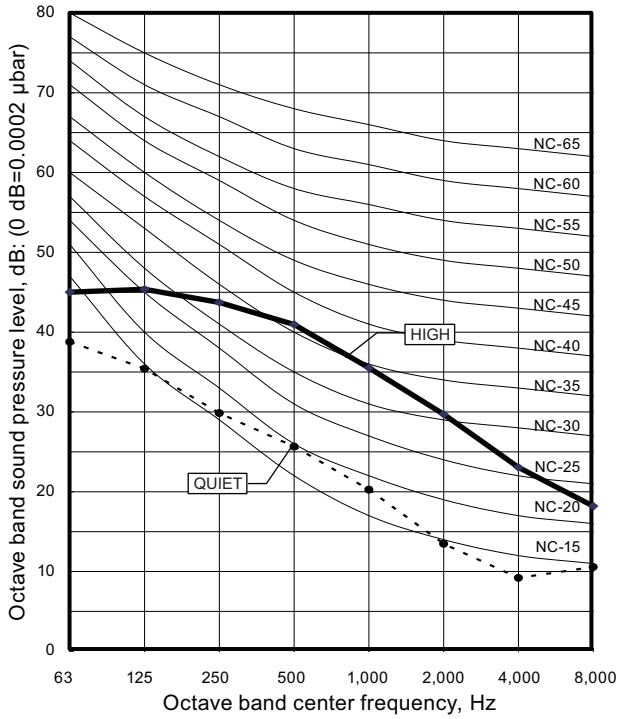

● Heating

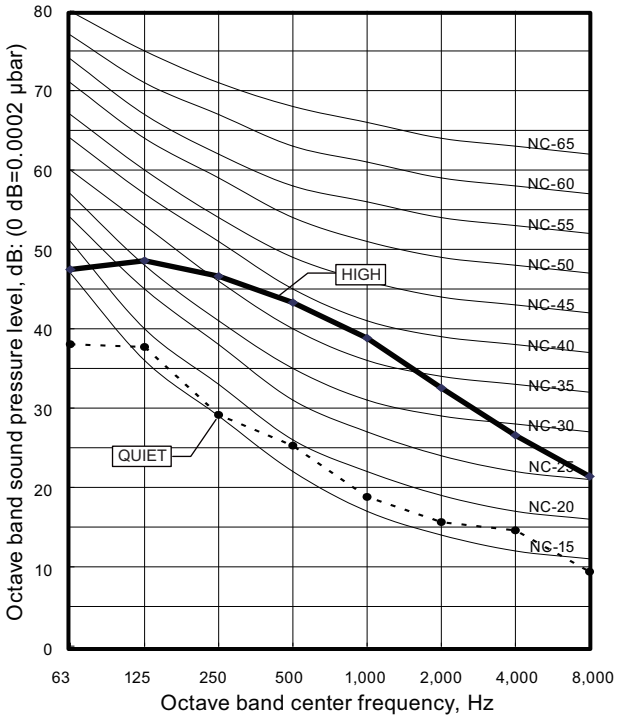

■ Model: ARXG45KMLA

● Cooling

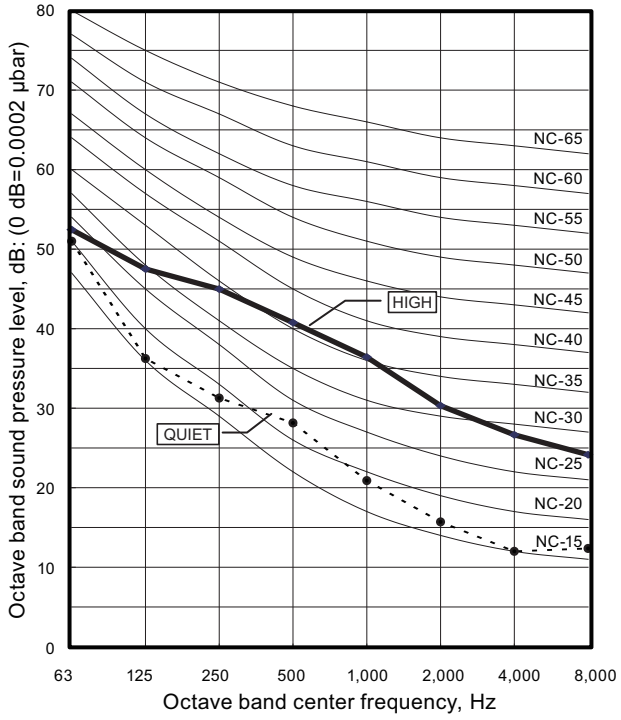

● Heating

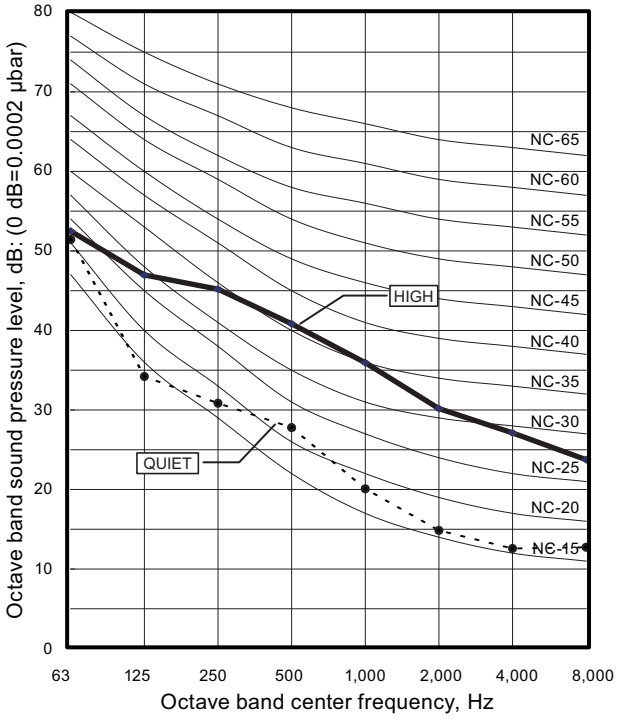

DUCT TYPE
ARHG24-45KMLA

6-2. Sound level check point

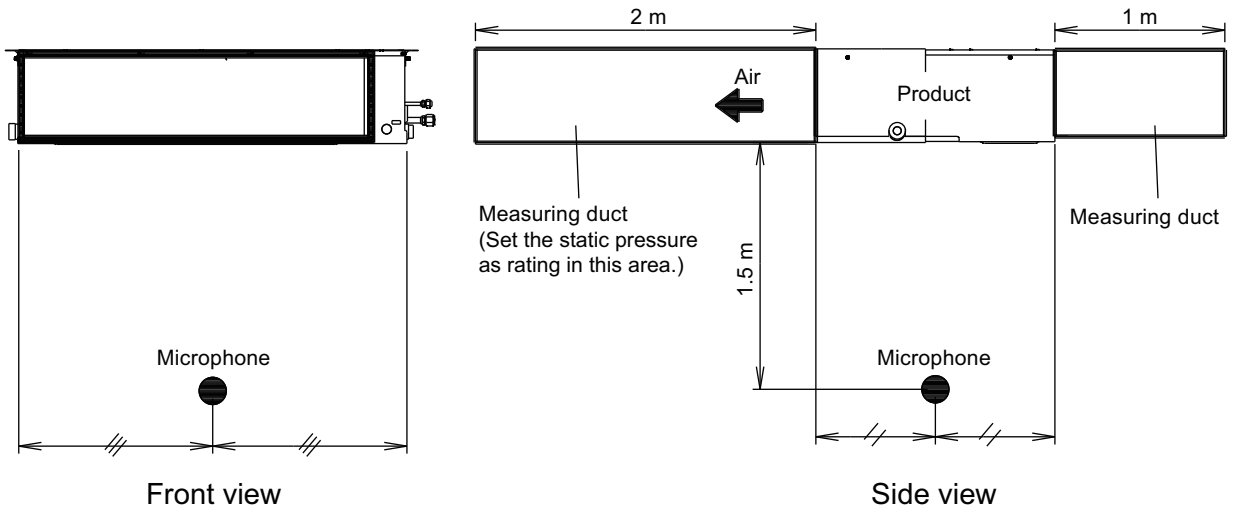

DUCT TYPE
ARHG24-45KMLA

7. Safety devices

Type of protection	Protection form		Model	
			ARXG24KMLA	ARHG30-45KMLA
Circuit protection	Current fuse (PCB*)		250 V, 5 A	
Fan motor protection	Thermal protection program	Activate	135 ±15 °C Fan motor stop	115 ±15 °C Fan motor stop
		Reset	115 ±15 °C Fan motor restart	70 °C Fan motor restart

*: Printed Circuit Board

DUCT TYPE
ARHG24-45KMLA

8. External input and output

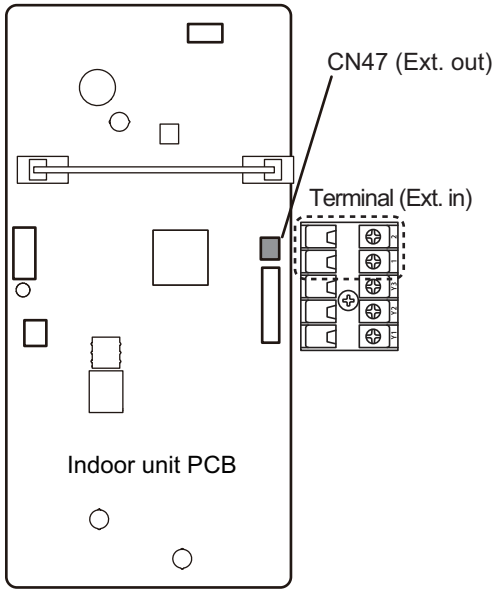

External input and output		Connector	Input select	Input signal	External connect kit (Optional parts)
External input	Operation/Stop Forced stop	Terminal	Dry contact	Edge	—
External output	Operation status	CN47	—	—	UTY-XWZXZG
	Error status				
	Indoor unit fan operation status				
	External heater output				

8-1. External input

- “Operation/Stop” mode or "Forced stop" mode can be selected with function setting of indoor unit.
- A twisted pair cable (22AWG) should be used. Maximum length of cable is 150 m.
- The wire connection should be separate from the power cable line.

Indoor unit functions such as Operation/Stop can be done by using indoor unit terminals.

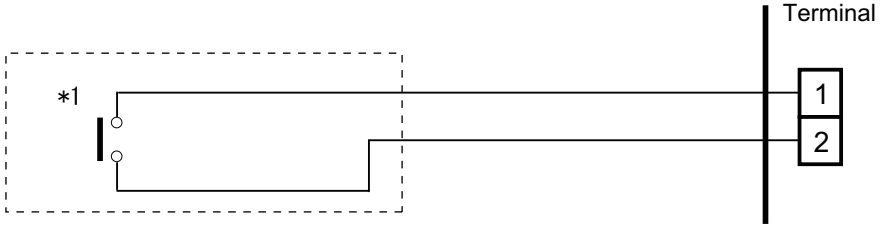

*1: The switch can be used on the following condition: DC 12 V to 24 V, 1 mA to 15 mA.

DUCT TYPE
ARHG24-45KMLA

8-2. External output

Use an external output cable with appropriate external dimension, depending on the number of cables to be installed.

- A twisted pair cable (22AWG) should be used. Maximum length of cable is 25 m.
- Output voltage: High DC 12 V ± 2 V, Low 0 V.
- Permissible current: 50 mA
- For details, refer to "Combination of external input and output" on page 52.

● When indicator, etc. are connected directly

Example: Function setting 60 is set to "00"

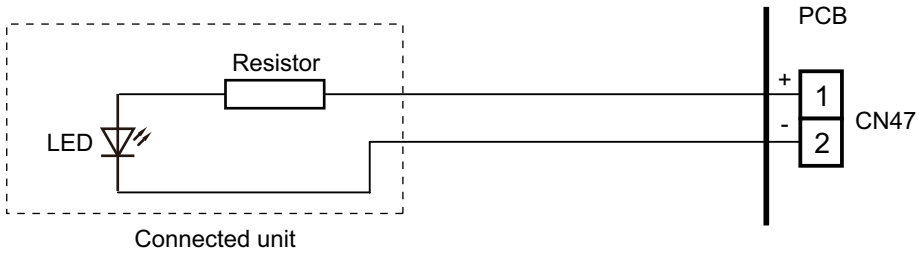

● When connecting with a device equipped with a power supply

Example: Function setting 60 is set to "00"

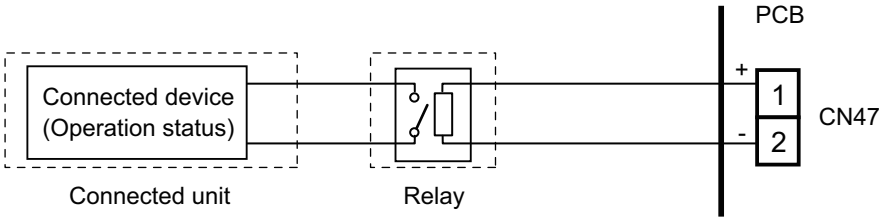

DUCT TYPE
ARHG24-45KMLA

8-3. Combination of external input and output

By combining the function setting of the indoor unit, you can select various combinations of functions.

Combination examples of external input and output are as follows:

Mode	Function setting	External input	External output
		Terminal	CN47
0	60—00	Operation/Stop	
1—8	60—01 to 60—08	(Setting prohibited)	
9	60—09	Operation/Stop	Error status
10	60—10	Operation/Stop	Indoor unit fan operation status
11	60—11	Operation/Stop	External heater output

NOTE: Input of Operation/Stop depends on the setting of function setting 46.

- 00: Operation/Stop mode 1 (R.C. enabled)
- 01: (Setting prohibited)
- 02: Forced stop
- 03: Operation/Stop mode 2 (R.C. disabled)

■ Input signal type

- Indoor unit
  Input signal type is only "Edge".

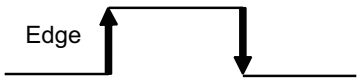

DUCT TYPE
ARHG24-45KMLA

8-4. Details of function

■ Control input function

- **When function setting is "Operation/Stop" mode 1**

Function setting	External input	Input signal	Command
46—00	Terminal	Off → On	Operation
		On → Off	Stop

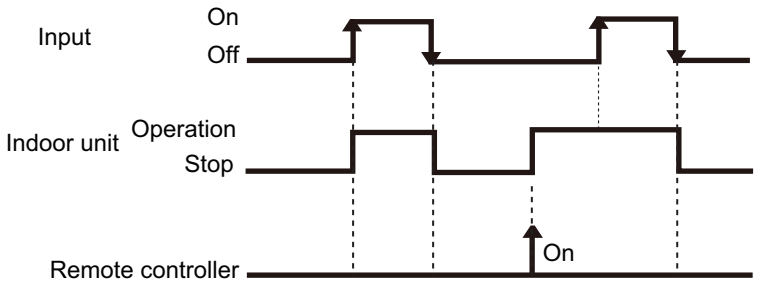

NOTES:

- The last command has priority.
- The indoor units within the same remote controller group operates in the same mode.

- **When function setting is "Forced stop" mode**

Function setting	External input	Input signal	Command
46—02	Terminal	Off → On	Forced stop
		On → Off	Normal

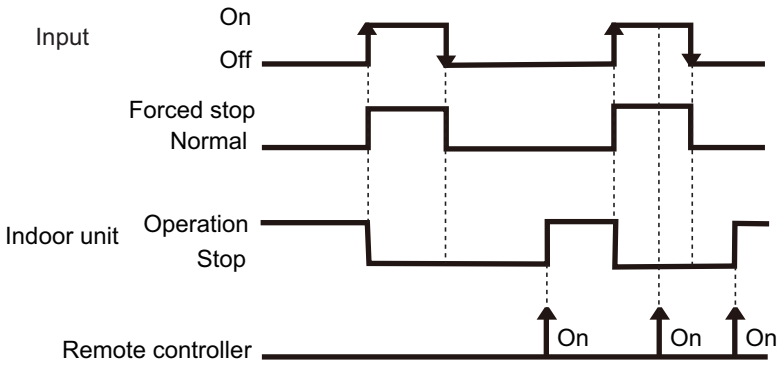

NOTES:

- When the forced stop is triggered, indoor unit stops and Operation/Stop operation by the remote controller is restricted.
- When forced stop function is used with forming a remote controller group, connect the same equipment to each indoor unit within the group.

DUCT TYPE
ARHG24-45KMLA

- **When function setting is "Operation/Stop" mode 2**

Function setting	External input	Input signal	Command
46—03	Terminal	Off → On	Operation
		On → Off	Stop (R.C. disabled)

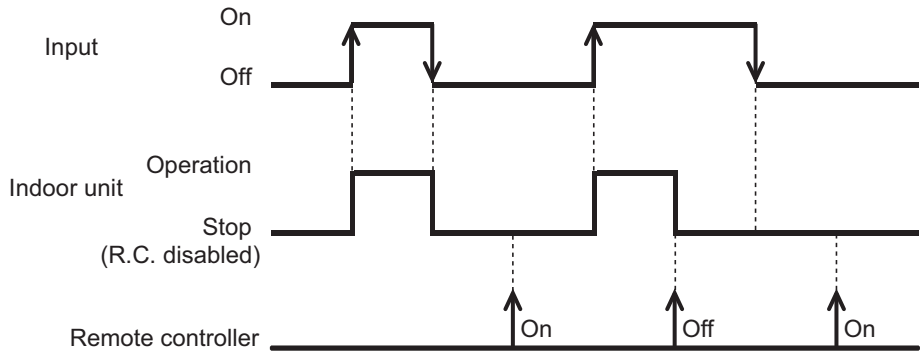

NOTE: When "Operation/Stop" mode 2 function is used with forming a remote controller group, connect the same equipment to each indoor unit within the group.

■ Control output function

Function setting	External output	Output signal	Command
60—00	CN47	Low → High	Operation
		High → Low	Stop

The output is low when the unit is stopped.

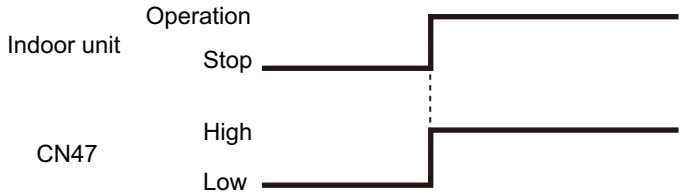

■ Error status

Function setting	External output	Output signal	Command
60—09	CN47	Low → High	Error
		High → Low	Normal

The output is ON when an error is generated for the indoor unit.

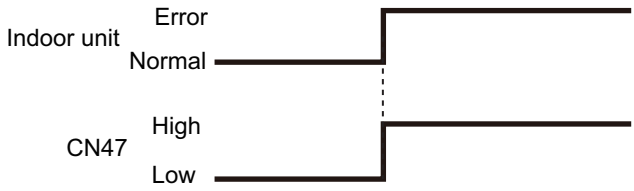

DUCT TYPE
ARHG24-45KMLA

■ Indoor unit fan operation status

Function setting	External output	Output signal	Command
60—10	CN47	Low → High	Fan run
		High → Low	Fan stop

Output signal	Condition
On	The indoor unit fan is operating.
Low → High	
Off	The fan is stopped or during cold air prevention. During thermostat off when in dry mode operation.
High → Low	

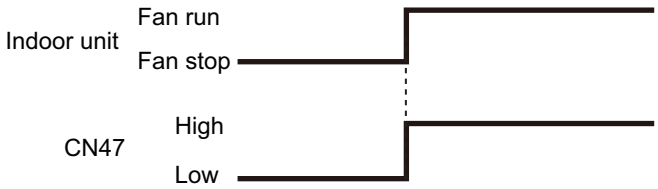

■ External heater output

Function setting	External output	Output signal	Command
60—11	CN47	Low → High	Heater on
		High → Low	Heater off

Output signal	Condition
Low → High	Heater turns on as shown in diagram of heating temperature
Off → On	
High → Low	Heater turns off as shown in diagram of heating temperature • Other than Heating mode • Error occurred • Forced thermo off • Fan stop protection
On → Off	

Specifications of the signal output performance are as shown as follows:

Example When set temperature (Ts) is set at 22 °C;

- And room temperature (Tr) increase above 12 °C, signal output is on.
- And Tr increase above 21 °C, signal output is off.
- And Tr decrease below 19 °C, signal output is on.
- And Tr decrease below 10 °C, signal output is off.

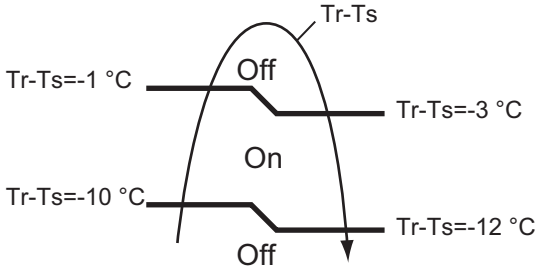

The output also turns off in defrost operation.

DUCT TYPE
ARHG24-45KMLA

9. Function settings

To adjust the functions of this product according to the installation environment, various types of function settings are available.

NOTE: Incorrect settings can cause a product malfunction.

9-1. Function settings on indoor unit

By using some components on the PCB, you can change the function settings.

Related components on the PCB and the applicable settings:

Component			Setting content
DIP switch	SW100	1	Remote controller address setting
		2	
		3	
		4	
	SW101	1	Setting change prohibited
		2	Setting change prohibited
		3	Fan delay setting

■ Component location

Components on the indoor unit main PCB used for the function settings are located as shown in the following figure.

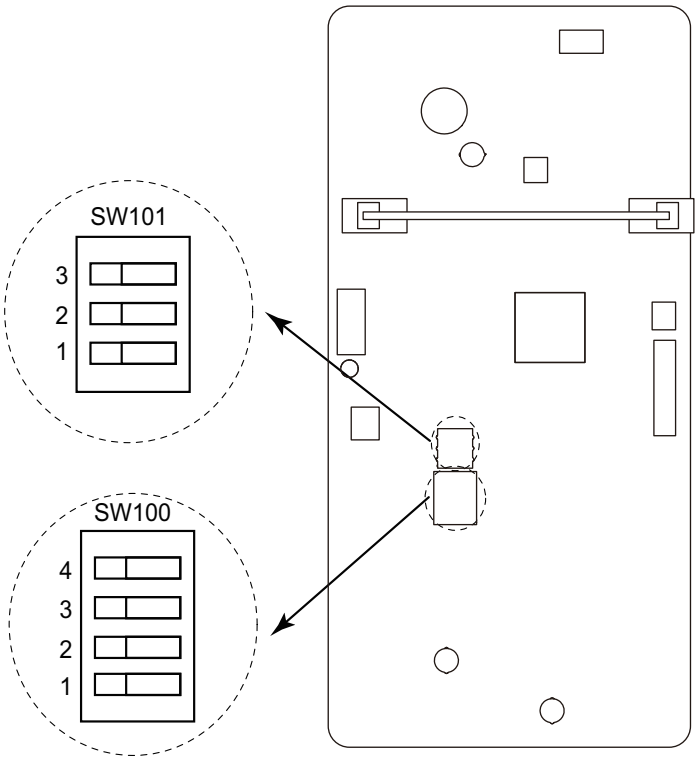

DUCT TYPE
ARHG24-45KMLA

■ DIP switch setting

- **SW100: Remote controller address setting**
  When operating a number of indoor units by using a wired remote controller, DIP switch setting for assigning unit number to each indoor unit is required.
  The slide switches are normally set to make the unit number 00.

Remote controller address	Switch number				Factory setting
	1	2	3	4	
00	OFF	OFF	OFF	OFF	♦
01	ON	OFF	OFF	OFF	
02	OFF	ON	OFF	OFF	
03	ON	ON	OFF	OFF	
04	OFF	OFF	ON	OFF	
05	ON	OFF	ON	OFF	
06	OFF	ON	ON	OFF	
07	ON	ON	ON	OFF	
08	OFF	OFF	OFF	ON	
09	ON	OFF	OFF	ON	
10	OFF	ON	OFF	ON	
11	ON	ON	OFF	ON	
12	OFF	OFF	ON	ON	
13	ON	OFF	ON	ON	
14	OFF	ON	ON	ON	
15	ON	ON	ON	ON	

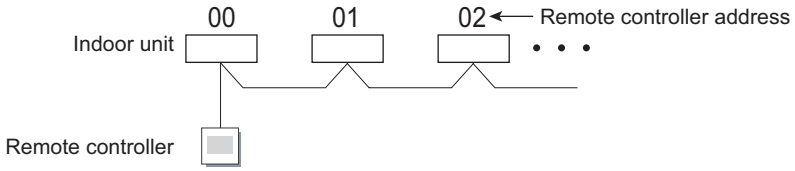

- **SW101-Switch 1: Setting change prohibited**

- **SW101-Switch 2: Setting change prohibited**

- **SW101-Switch 3: Fan delay setting**
  When the indoor unit is stopped while operating in conjunction with auxiliary heater, the indoor unit fan operation will continue for 1 minute.

Switch 3	Fan delay	Factory setting
ON	Enabled	
OFF	Disabled	♦

DUCT TYPE
ARHG24-45KMLA

9-2. Function settings by using remote controller

Some function settings can be changed on the remote controller. After confirming the setting procedure and the content of each function setting, select appropriate functions for your installation environment.

■ Setting procedure by using remote controller

Remote controller is not attached for this product. For details of the installing remote controller, refer to following information.

- Overview information: Operating manual of the remote controller
- Setting procedure: Installation manual of the remote controller

■ Contents of function setting

Each function setting listed in this section is adjustable in accordance with the installation environment.

NOTE: Setting will not be changed if invalid numbers or setting values are selected.

● Function setting list

	Function no.	Functions
1)	11	Filter sign
2)	21	Static pressure
3)	30/31	Room temperature control for indoor unit sensor
4)	35/36	Room temperature control for wired remote controller sensor
5)	40	Auto restart
6)	42	Room temperature sensor switching
7)	44	Remote controller custom code
8)	46	External input control
9)	48	Room temperature sensor switching (Aux.)
10)	49	Indoor unit fan control for energy saving for cooling
11)	60	Switching functions for external output terminal

1) Filter sign

Select appropriate intervals for displaying the filter sign on the indoor unit according to the estimated amount of dust in the air of the room.

If the indication is not required, select "No indication" (03).

Function number	Setting value	Setting description	Factory setting
11	00	Standard (2,500 hours)	
	01	Long interval (4,400 hours)	
	02	Short interval (1,250 hours)	
	03	No indication	♦

2) Static pressure

Select the appropriate static pressure according to the installation conditions.

Function number	Setting value	Setting description	Factory setting
21	00	Normal	♦
	01	High static pressure 1	
	02	High static pressure 2	
	03	High static pressure 3	

DUCT TYPE
ARHG24-45KMLA

3) Room temperature control for indoor unit sensor

Depending on the installed environment, correction of the room temperature sensor may be required. Select the appropriate control setting according to the installed environment.

The temperature correction values show the difference from the Standard setting "00" (manufacturer's recommended value).

Function number		Setting value	Setting description		Factory setting
30 (For cooling)	31 (For heating)	00	Standard setting		♦
		01	No correction 0.0 °C		
		02	-0.5 °C	More cooling Less heating	
		03	-1.0 °C		
		04	-1.5 °C		
		05	-2.0 °C		
		06	-2.5 °C		
		07	-3.0 °C		
		08	-3.5 °C		
		09	-4.0 °C		
		10	+0.5 °C	Less cooling More heating	
		11	+1.0 °C		
		12	+1.5 °C		
		13	+2.0 °C		
		14	+2.5 °C		
		15	+3.0 °C		
		16	+3.5 °C		
		17	+4.0 °C		

4) Room temperature control for wired remote controller sensor

Depending on the installed environment, correction of the wire remote temperature sensor may be required. Select the appropriate control setting according to the installed environment.

To change this setting, set Function 42 to Both "01".

Ensure that the Thermo Sensor icon is displayed on the remote controller screen.

Function number		Setting value	Setting description		Factory setting
35 (For cooling)	36 (For heating)	00	No correction		♦
		01	No correction 0.0°C		
		02	-0.5 °C	More cooling Less heating	
		03	-1.0 °C		
		04	-1.5 °C		
		05	-2.0 °C		
		06	-2.5 °C		
		07	-3.0 °C		
		08	-3.5 °C		
		09	-4.0 °C		
		10	+0.5 °C	Less cooling More heating	
		11	+1.0 °C		
		12	+1.5 °C		
		13	+2.0 °C		
		14	+2.5 °C		
		15	+3.0 °C		
		16	+3.5 °C		
		17	+4.0 °C		

DUCT TYPE
ARHG24-45KMLA

5) Auto restart

Enables or disables automatic restart after a power interruption.

Function number	Setting value	Setting description	Factory setting
40	00	Enable	♦
	01	Disable	

NOTE: Auto restart is an emergency function such as for power outage etc. Do not attempt to use this function in normal operation. Be sure to operate the unit by remote controller or external device.

6) Room temperature sensor switching

(Only for wired remote controller)

When using the wired remote controller temperature sensor, change the setting to "Both" (01).

Function number	Setting value	Setting description	Factory setting
42	00	Indoor unit	♦
	01	Both	

00: Sensor on the indoor unit is active.

01: Sensors on both indoor unit and wired remote controller are active.

NOTE: Remote controller sensor must be turned on by using the remote controller.

7) Remote controller custom code

(Only for wireless remote controller)

The indoor unit custom code can be changed. Select the appropriate custom code.

Function number	Setting value	Setting description	Factory setting
44	00	A	♦
	01	B	
	02	C	
	03	D	

8) External input control

"Operation/Stop" mode or "Forced stop" mode can be selected.

Function number	Setting value	Setting description	Factory setting
46	00	Operation/Stop mode 1	♦
	01	(Setting prohibited)	
	02	Forced stop mode	
	03	Operation/Stop mode 2	

9) Room temperature sensor switching (Aux.)

To use the temperature sensor on the wired remote controller only, change the setting to "Wired remote controller" (01).

This function will only work if the function setting 42 is set at "Both" (01).

When the setting value is set to "Both" (00), more suitable control of the room temperature is possible by setting function setting 30 and 31 too.

Function number	Setting value	Setting description	Factory setting
48	00	Both	♦
	01	Wired remote controller	

DUCT TYPE
ARHG24-45KMLA

10) Indoor unit fan control for energy saving for cooling

Enables or disables the power-saving function by controlling the indoor unit fan rotation when the outdoor unit is stopped during cooling operation.

Function number	Setting value	Setting description	Factory setting
49	00	Disable	
	01	Enable	
	02	Remote controller	♦

00: When the outdoor unit is stopped, the indoor unit fan operates continuously following the setting on the remote controller.

01: When the outdoor unit is stopped, the indoor unit fan operates intermittently at a very low speed.

02: Enable or disable this function by remote controller setting.

NOTES:

- As the factory setting, this setting is initially activated.
- Set to "00" or "01" when connecting a remote controller that cannot set the Fan control for energy saving function or connecting a network converter.
  To confirm if the remote controller has this setting, refer to the operating manual of each remote controller.

11) Switching functions for external output terminal

Functions of the external output terminal can be switched. For details, refer to “External input and output”.

Function number	Setting value	Setting description	Factory setting
60	00	Operation status	♦
	01—08	(Setting prohibited)	
	09	Error status	
	10	Indoor unit fan operation status	
	11	External heater	

DUCT TYPE
ARHG24-45KMLA

10. Accessories

10-1. Models: ARXG24KMLA, ARXG30KMLA, ARXG36KMLA, and ARXG45KMLA

Part name	Exterior	Q'ty	Part name	Exterior	Q'ty
Operating manual		1	Cable tie (medium)		1
Operating manual (CD-ROM)	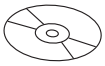	1	Cable tie (small)		1
Installation manual		1	Coupler heat insulation (large)	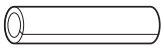	1
Hanger		4	Coupler heat insulation (small)	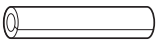	1
Drain hose insulation	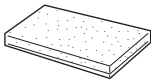	1	M10 nut A (with flange)		4
Cable tie (large)		1	M10 nut B (with spring lock washer)		4

DUCT TYPE
ARHG24-45KMLA

11. Optional parts

11-1. Controllers

Exterior	Part name	Model name	Summary
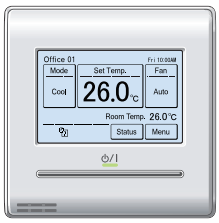	Wired remote controller	UTY-RNRGZ*	Easy finger touch operation with LCD panel. Backlit LCD enables easy operation in a dark room. Wire type: Non-polar 2-wire
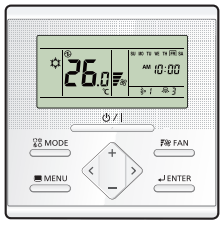	Wired remote controller	UTY-RLRG	High visibility and easy operation. Room temperature can be accurately controlled using the built-in thermo sensor. Wire type: Non-polar 2-wire
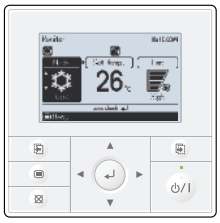	Wired remote controller	UTY-RVNGM	Large and full-dot liquid crystal screen, wide and large keys easy to press, user-intuitive arrow key. Wire type: Polar 3-wire
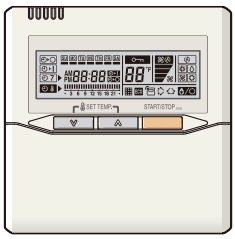	Wired remote controller	UTY-RNNGM	Room temperature can be controlled by detecting the temperature accurately with built-in thermo sensor. Wire type: Polar 3-wire
	Simple remote controller	UTY-RSRG	Compact remote controller concentrates on the basic functions such as Start/Stop, fan control, temperature setting, and operation mode. Wire type: Non-polar 2-wire
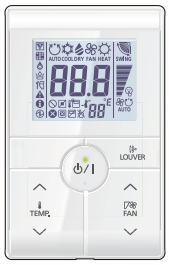	Simple remote controller	UTY-RHRG	Compact remote controller concentrates on the basic functions such as Start/Stop, fan control, and temperature setting. Wire type: Non-polar 2-wire
	Simple remote controller	UTY-RSNGM	Compact remote controller concentrates on the basic functions such as Start/Stop, fan control, temperature setting, and operation mode. Wire type: Polar 3-wire

DUCT TYPE
ARHG24-45KMLA

Exterior	Part name	Model name	Summary
	IR receiver kit with wireless remote controller	UTY-LBTGM	Unit control is performed by wireless remote controller.

NOTE: Available functions may differ by the remote controller. For details, refer to the operation manual.

11-2. Others

Exterior	Part name	Model name	Summary
	Remote sensor unit	UTY-XSZX	Thermo-sensor for sensing the temperature of arbitrary place in the room.
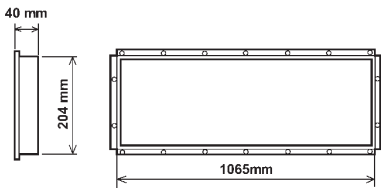	Square flange	UTD-SF045T	Both the Square flange and the Round flange can be selected.
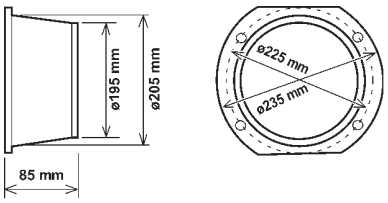	Round flange	UTD-RF204	Round flange is used when the fresh-air duct is installed.
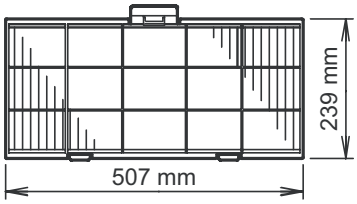	Long-life filter	UTD-LF25NA	Long-life filter can be mounted to the indoor unit.
	Drain pump unit	UTZ-PX1NBA	Optional drain lift up mechanism allows more flexible installation.
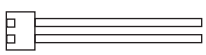	External connect kit	UTY-XWZXZG	Use to connect with various peripheral devices and air conditioner PCB. For control output port.

DUCT TYPE
ARHG24-45KMLA

Exterior	Part name	Model name	Summary
	Wireless LAN adapter	UTY-TFSXZ1	Remotely manage an air conditioning system using mobile devices such as smartphones and tablets. For connection indoor unit with UART interface.
	Modbus converter	UTY-VMSX	For connection between indoor unit with UART interface and a Modbus open network.
	KNX converter	UTY-VKSX	For connection between indoor unit with UART interface and a KNX open network.
	External switch controller	UTY-TERX	Air conditioner switching can be controlled by connecting other external sensor switches.

NOTE: Combined use of following optional parts and Wireless LAN adapter (UTY-TFSXZ1) is not allowed.

- Modbus converter
- KNX converter

DUCT TYPE
ARHG24-45KMLA

Part 2. OUTDOOR UNIT

SINGLE TYPE:

AOHG24KBTB
AOHG30KBTB
AOHG36KBTB
AOHG45KBTB

1. Specifications

Type				Inverter heat pump
Model name				**AOHG24KBTB**
Power supply				230 V ~ 50 Hz
Power supply intake				Outdoor unit
Available voltage range				198—264 V
Starting current			A	9.4
Fan	Airflow rate	Cooling	m^3/h	2,700
		Heating		2,700
	Type × Q'ty			Propeller × 1
	Motor output		W	49
Sound pressure level *1		Cooling	dB (A)	53
		Heating		54
Sound power level		Cooling	dB (A)	65
		Heating		66
Heat exchanger type		Dimensions (H × W × D)	mm	Main1: 672 × 881 × 18.2 Main2: 672 × 851 × 18.2
		Fin pitch		1.3
		Rows × Stages		2 × 32
		Pipe type		Copper tube
		Fin	Type (Material)	Aluminum
			Surface treatment	PC fin
Compressor	Type × Q'ty			DC Twin rotary × 1
	Motor output		W	1,060
Refrigerant		Type (Global warming potential)		R32 (675)
		Factory charge	g	1,250
Refrigerant oil		Type		RmM68AF
		Amount	cm^3	400
Enclosure		Material		Steel sheet
		Color		Beige Approximate color of Munsell 10YR 7.5/1.0
Dimensions (H × W × D)	Net		mm	716 × 820 × 315
	Gross			776 × 961 × 450
Weight	Net		kg	42
	Gross			46
Connection pipe	Size	Liquid	mm (in)	Ø6.35 (1/4)
		Gas		Ø12.70 (1/2)
	Method			Flare
	Pre-charge length		m	20
	Max. length			30
	Max. height difference			25
Operation range		Cooling	°C	-15 to 46
		Heating		-15 to 24
Drain hose		Material		PP
		Size	mm	Ø13.0 (I. D.), Ø16.0 to Ø16.8 (O. D.)

NOTES:

- Specifications are based on the following conditions:
  - Cooling: Indoor temperature of 27 °CDB/19 °CWB, and outdoor temperature of 35 °CDB/24 °CWB.
  - Heating: Indoor temperature of 20 °CDB/15 °CWB, and outdoor temperature of 7 °CDB/6 °CWB.
  - Pipe length: 5 m, Height difference: 0 m. (Between outdoor unit and indoor unit.)
- Protective function might work when using it outside the operation range.
- *1: Sound pressure level
  - Measured values in manufacturer's anechoic chamber.
  - Because of the surrounding sound environment, the sound levels measured in actual installation conditions might be higher than the specified values here.

OUTDOOR UNIT
AOHG24-45KBTB

Type				Inverter heat pump	
Model name				**AOHG30KBTB**	**AOHG36KBTB**
Power supply				230 V ~ 50 Hz	
Power supply intake				Outdoor unit	
Available voltage range				198—264 V	
Starting current			A	11.7	13.1
Fan	Airflow rate	Cooling	m^3/h	3,750	
		Heating		3,750	
	Type × Q'ty			Propeller × 1	
	Motor output		W	100	
Sound pressure level *1		Cooling	dB (A)	53	55
		Heating		55	55
Sound power level		Cooling	dB (A)	68	70
		Heating		69	70
Heat exchanger type		Dimensions (H × W × D)	mm	Main1: 756 × 905 × 18.2 Main2: 756 × 905 × 18.2	
		Fin pitch		1.45	
		Rows × Stages		1 × 36	
		Pipe type		Copper	
		Fin	Type (Material)	Aluminum	
			Surface treatment	Blue fin	
Compressor	Type × Q'ty			DC Twin rotary × 1	
	Motor output		W	1,500	
Refrigerant		Type (Global warming potential)		R32 (675)	
		Factory charge	g	1,900	
Refrigerant oil		Type		FW68D	
		Amount	cm^3	600	
Enclosure		Material		Steel sheet	
		Color		Beige Approximate color of Munsell 10YR 7.5/1.0	
Dimensions (H × W × D)	Net		mm	788 × 940 × 320	
	Gross			966 × 1,027 × 445	
Weight	Net		kg	52	
	Gross			60	
Connection pipe	Size	Liquid	mm (in)	Ø9.52 (3/8)	
		Gas		Ø15.88 (5/8)	
	Method			Flare	
	Pre-charge length		m	30	
	Max. length			50	
	Max. height difference			30	
Operation range		Cooling	°C	-15 to 46	
		Heating		-15 to 24	
Drain hose		Material		LDPE	
		Size	mm	Ø13.0 (I. D.), Ø16.0 to Ø16.8 (O. D.)	

NOTES:

- Specifications are based on the following conditions:
  - Cooling: Indoor temperature of 27 °CDB/19 °CWB, and outdoor temperature of 35 °CDB/24 °CWB.
  - Heating: Indoor temperature of 20 °CDB/15 °CWB, and outdoor temperature of 7 °CDB/6 °CWB.
  - Pipe length: 5 m, Height difference: 0 m. (Between outdoor unit and indoor unit.)
- Protective function might work when using it outside the operation range.
- *1: Sound pressure level
  - Measured values in manufacturer's anechoic chamber.
  - Because of the surrounding sound environment, the sound levels measured in actual installation conditions might be higher than the specified values here.

OUTDOOR UNIT
AOHG24-45KBTB

Type				Inverter heat pump
Model name				**AOHG45KBTB**
Power supply				230 V ~ 50 Hz
Power supply intake				Outdoor unit
Available voltage range				198—264 V
Starting current			A	18.6
Fan	Airflow rate	Cooling	m^3/h	4,450
		Heating		4,450
	Type × Q'ty			Propeller × 1
	Motor output		W	120
Sound pressure level *1		Cooling	dB (A)	57
		Heating		57
Sound power level		Cooling	dB (A)	71
		Heating		71
Heat exchanger type		Dimensions (H × W × D)	mm	Main1: 966 × 905 × 18.2 Main2: 966 × 905 × 18.2 Sub: 966 × 543 × 18.2
		Fin pitch		1.45
		Rows × Stages		1 × 46
		Pipe type		Copper
		Fin	Type (Material)	Aluminum
			Surface treatment	Blue fin
Compressor	Type × Q'ty			DC Twin rotary × 1
	Motor output		W	2,180
Refrigerant		Type (Global warming potential)		R32 (675)
		Factory charge	g	2,700
Refrigerant oil		Type		RmM68AF
		Amount	cm^3	800
Enclosure		Material		Steel sheet
		Color		Beige Approximate color of Munsell 10YR 7.5/1.0
Dimensions (H × W × D)	Net		mm	998 × 940 × 320
	Gross			1,176 × 1,027 × 445
Weight	Net		kg	67
	Gross			75
Connection pipe	Size	Liquid	mm (in)	Ø9.52 (3/8)
		Gas		Ø15.88 (5/8)
	Method			Flare
	Pre-charge length		m	30
	Max. length			50
	Max. height difference			30
Operation range		Cooling	°C	-15 to 46
		Heating		-15 to 24
Drain hose		Material		LDPE
		Size	mm	Ø13.0 (I. D.), Ø16.0 to Ø16.8 (O. D.)

NOTES:

- Specifications are based on the following conditions:
  - Cooling: Indoor temperature of 27 °CDB/19 °CWB, and outdoor temperature of 35 °CDB/24 °CWB.
  - Heating: Indoor temperature of 20 °CDB/15 °CWB, and outdoor temperature of 7 °CDB/6 °CWB.
  - Pipe length: 5 m, Height difference: 0 m. (Between outdoor unit and indoor unit.)
- Protective function might work when using it outside the operation range.
- *1: Sound pressure level
  - Measured values in manufacturer's anechoic chamber.
  - Because of the surrounding sound environment, the sound levels measured in actual installation conditions might be higher than the specified values here.

2. Dimensions

2-1. Model: AOHG24KBTB

Unit: mm

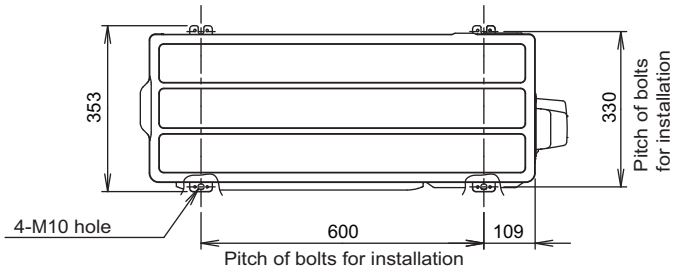

Top view

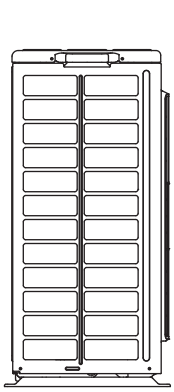

Side view

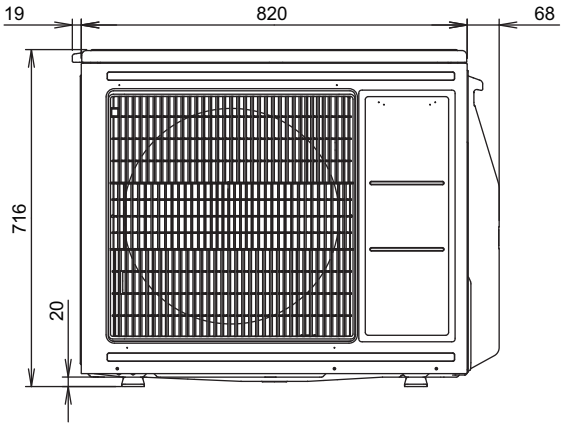

Front view

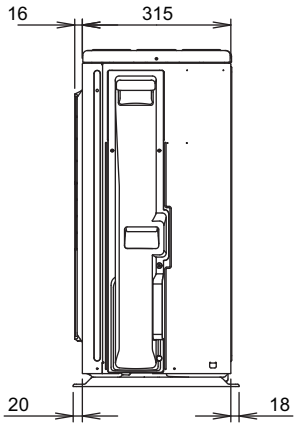

Side view

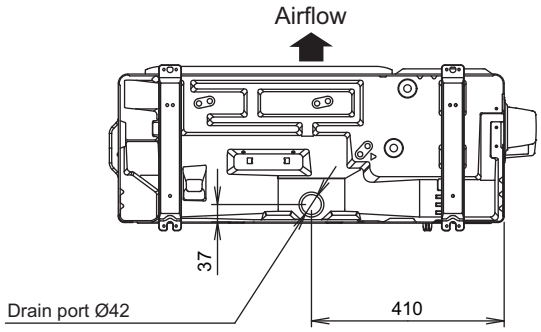

Bottom view

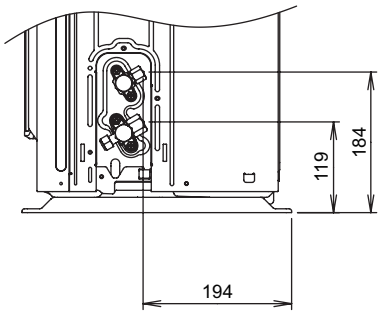

Side view (Valve part)

2-2. Models: AOHG30KBTB and AOHG36KBTB

Unit: mm

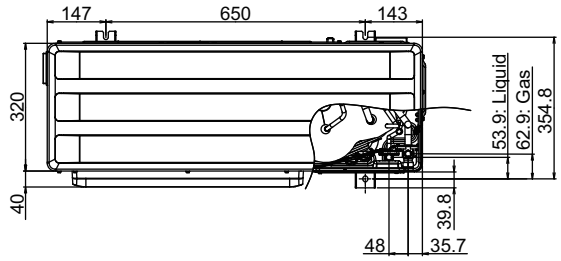

Top view

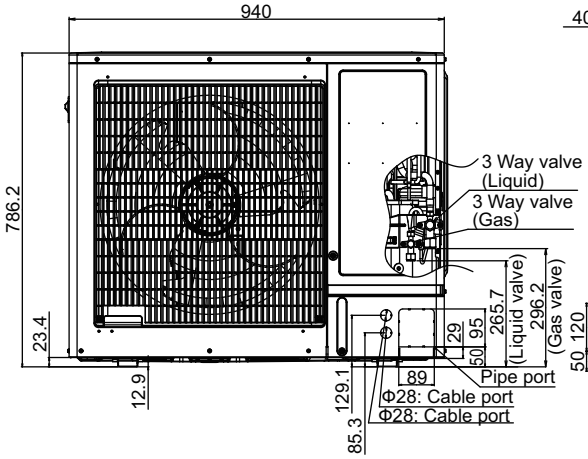

Front view

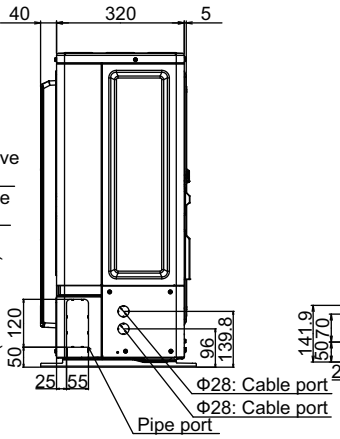

Side view

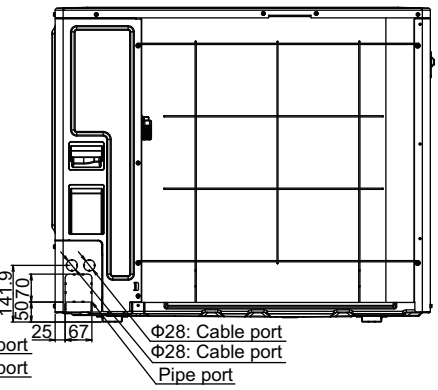

Rear view

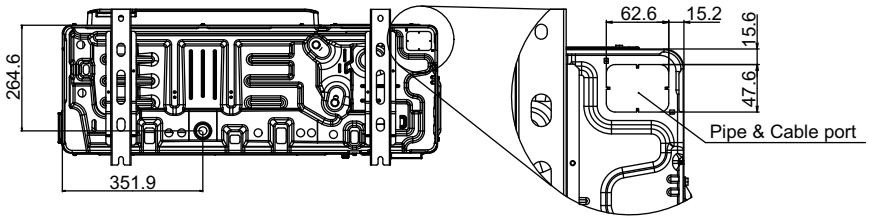

Bottom view

2-3. Model: AOHG45KBTB

Unit: mm

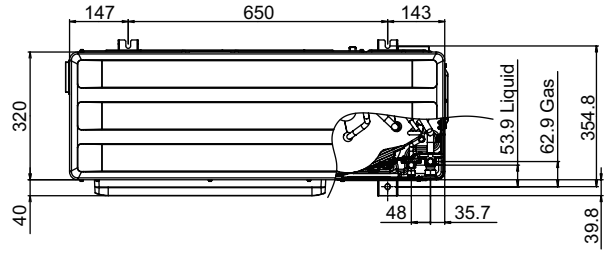

Top view

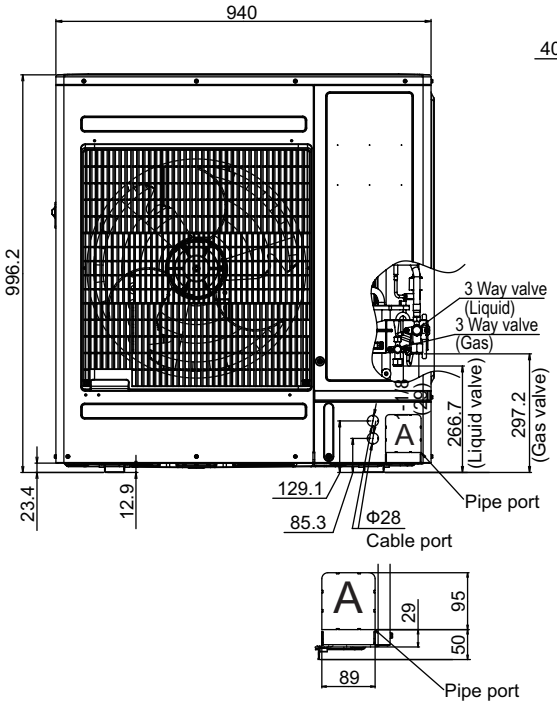

Front view

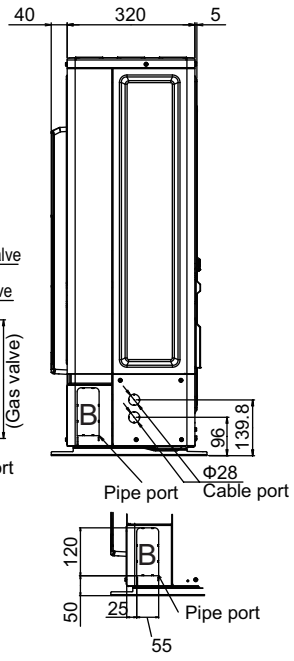

Side view

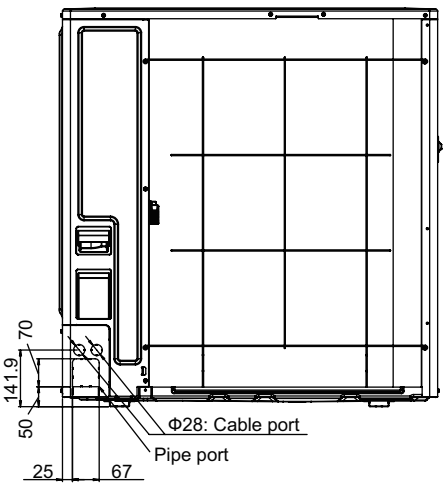

Rear view

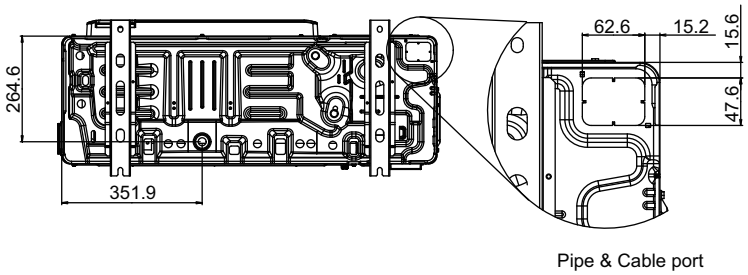

Bottom view

OUTDOOR UNIT
AOHG24-45KBTB

3. Installation space

3-1. Model: AOHG24KBTB

■ Space requirement

Provide sufficient installation space for product safety.

⚠ CAUTION

Keep the space shown in the installation examples.

If the installation is not performed accordingly, it could cause a short circuit and result in a lack of operating performance.

● Single outdoor unit installation

- **When the upper space is open:**

Unit: mm

Obstacles at rear only

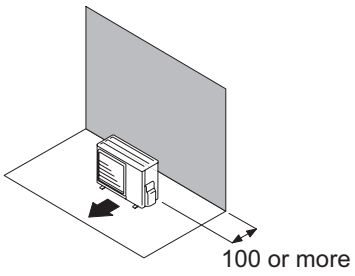

Obstacles at rear and sides

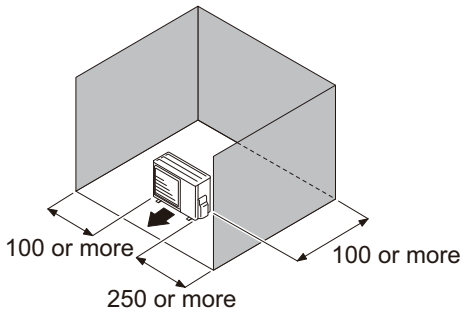

Obstacles at front

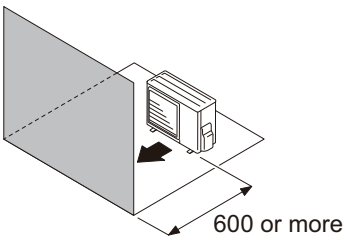

Obstacles at front and rear

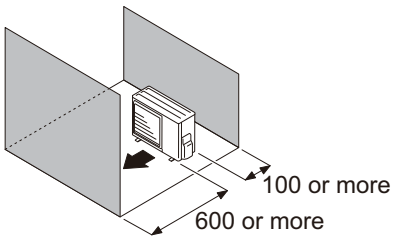

- **When there is an obstruction in the upper space:**

Unit: mm

Obstacles at rear and above

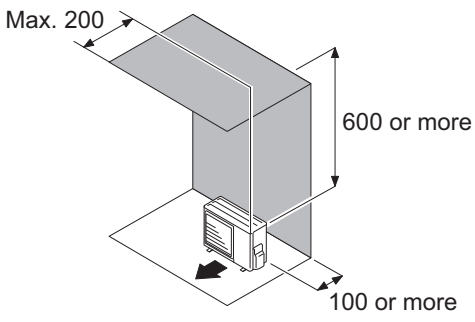

Obstacles at rear, sides, and above

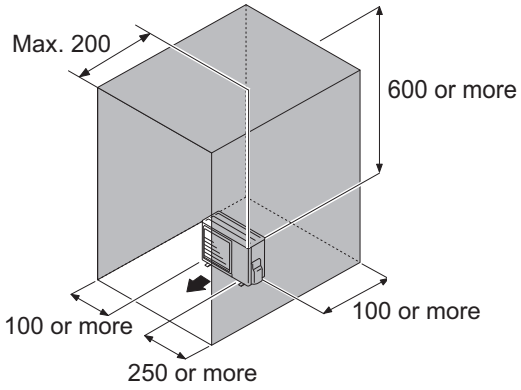

OUTDOOR UNIT
AOHG24-45KBTB

● Multiple outdoor unit installation

- Provide at least 250 mm of space between the outdoor units if multiple units are installed.
- When routing the piping from the side of an outdoor unit, provide space for piping.
- No more than 3 units must be installed side by side.
  When 3 units or more are arranged in a line, provide the space as shown in the following example "**When an obstruction in the upper space:**".

- **When the upper space is open:**

Unit: mm

Obstacles at rear only

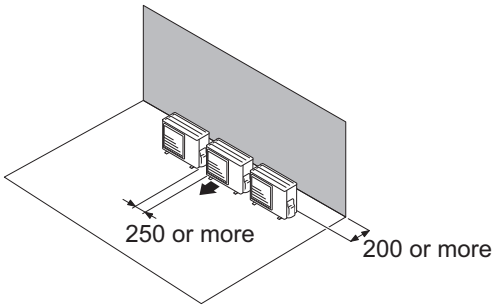

Obstacles at front only

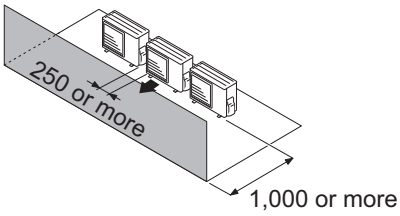

Obstacles at front and rear

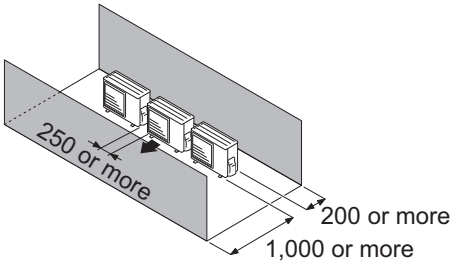

- **When an obstruction in the upper space:**

Unit: mm

Obstacles at rear and above.

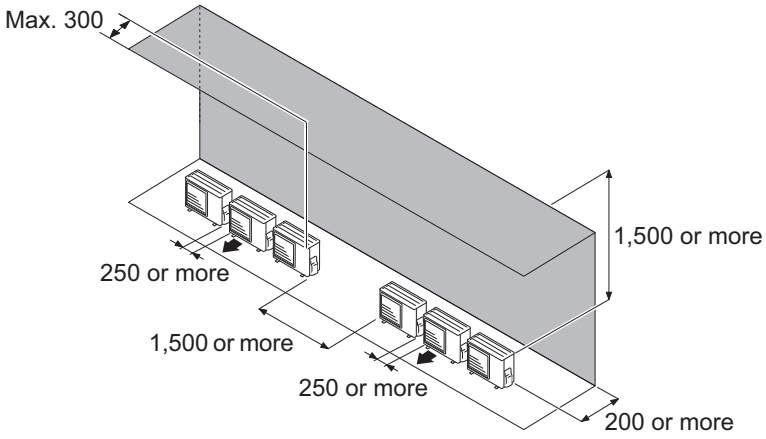

OUTDOOR UNIT
AOHG24-45KBTB

● Outdoor units installation in multi-row

Unit: mm

Single parallel unit arrangement

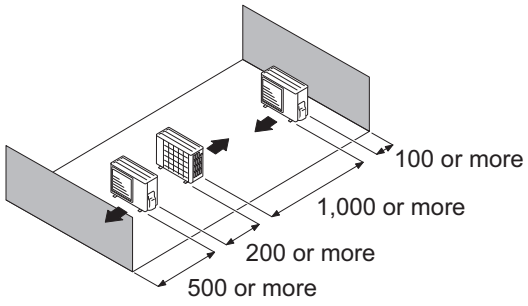

Multiple parallel unit arrangement

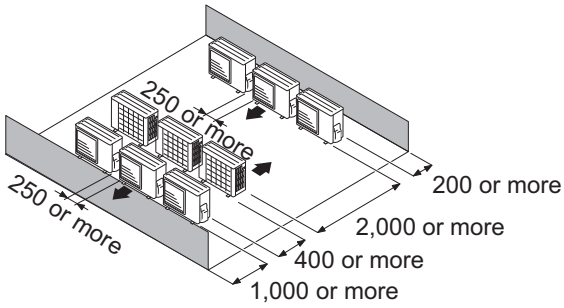

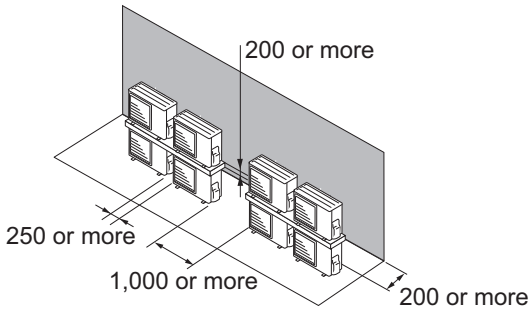

NOTES:

- If the space is larger than stated above, the condition will be the same as when there is no obstacle.
- When installing the outdoor unit, be sure to open the front and left side to obtain better operation efficiency.

⚠ CAUTION

- Do not install the outdoor unit in two-stage where the drain water could freeze. Otherwise the drainage from the upper unit may form ice and cause a malfunction of the lower unit.
- When the outdoor temperature is 0 °C or less, do not use the accessory drain pipe and drain cap. If the drain pipe and drain cap are used, the drain water in the pipe may freeze in extremely cold climate. (For reverse cycle model only.)
- In area with heavy snowfall, if the inlet and outlet of the outdoor unit is blocked with snow, it might become difficult to get warm, and it is likely to cause product malfunction. Construct a canopy and a pedestal, or place the unit on a high stand that is locally installed.

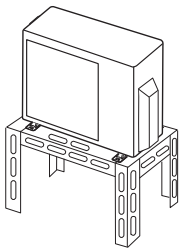

OUTDOOR UNIT
AOHG24-45KBTB

3-2. Models: AOHG30KBTB, AOHG36KBTB, and AOHG45KBTB

■ Space requirement

Provide sufficient installation space for product safety.

● Single outdoor unit installation

- **When the upper space is open:**

Unit: mm

When there are obstacles at the rear only.

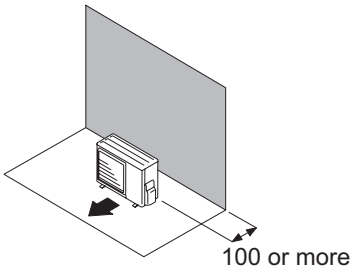

When there are obstacles at the rear and sides.

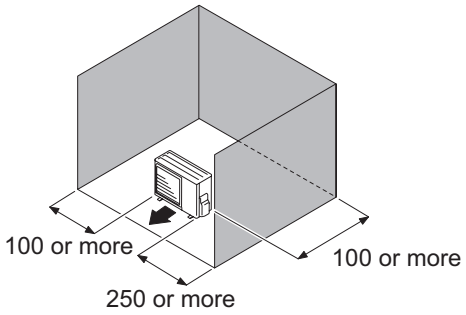

When there are obstacles at the front only.

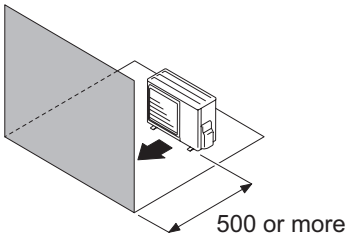

When there are obstacles at the front and rear.

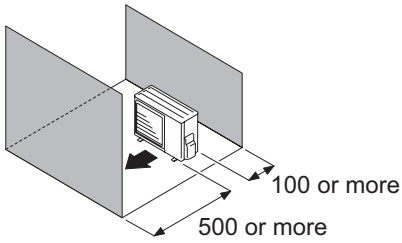

- **When there is an obstruction in the upper space:**

Unit: mm

When there are obstacles at the rear and above.

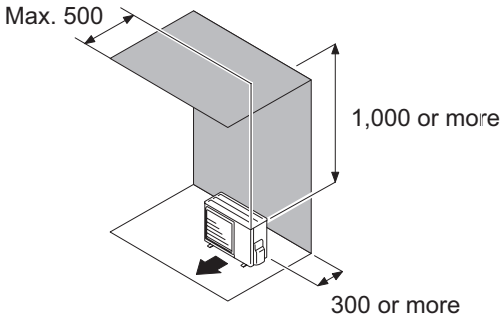

When there are obstacles at the rear, sides, and above.

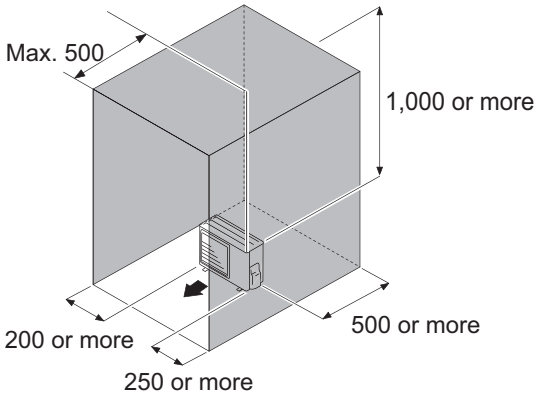

OUTDOOR UNIT
AOHG24-45KBTB

● Multiple outdoor unit installation

- **When the upper space is open:**

Unit: mm

When there are obstacles at the rear only.

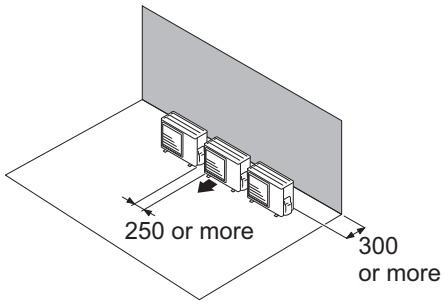

When there are obstacles at the front only.

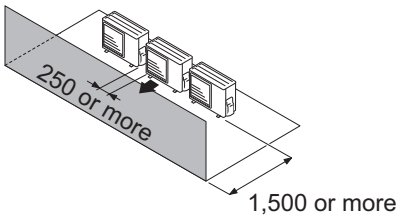

When there are obstacles at the front and rear.

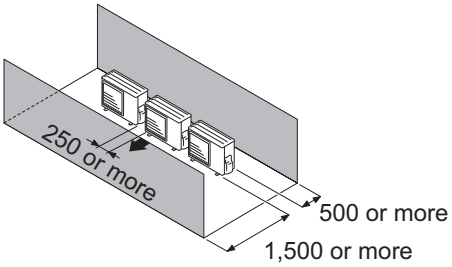

- **When there is an obstruction in the upper space:**

Unit: mm

When there are obstacles at the rear and above.

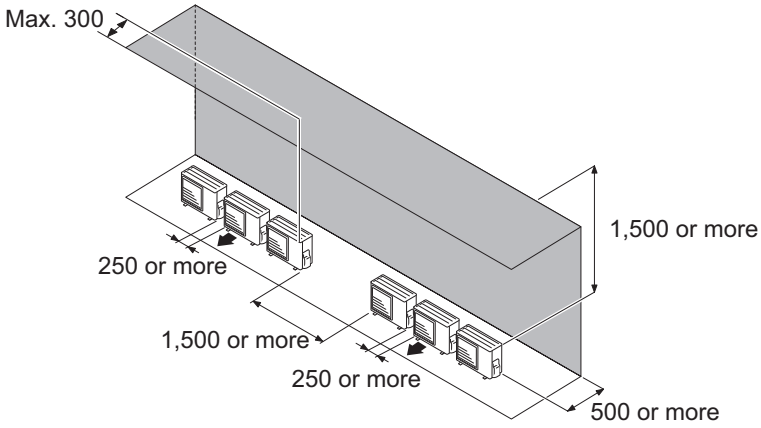

OUTDOOR UNIT
AOHG24-45KBTB

● Outdoor unit installation in multi-row

Unit: mm

Single parallel unit arrangement

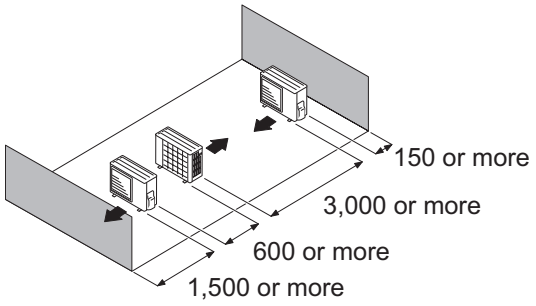

Multiple parallel unit arrangement

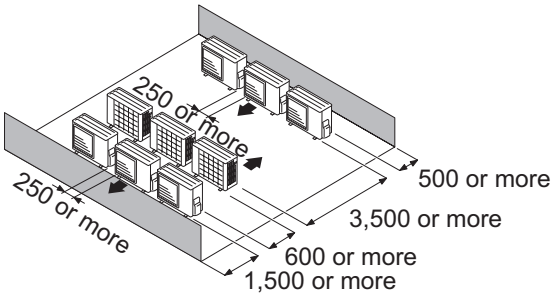

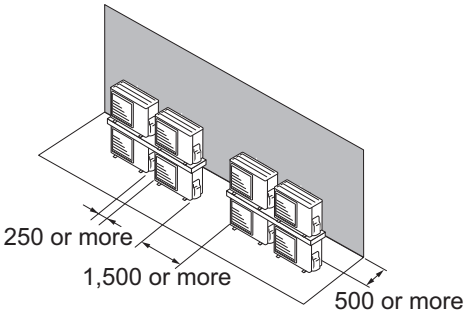

NOTES:

- If the space is larger than stated above, the condition will be the same as when there is no obstacle.
- Height above the floor level should be 50 mm or more.
- When installing the outdoor unit, be sure to open the front and left side to obtain better operation efficiency.

⚠ CAUTION

- Do not install the outdoor unit in two-stage where the drain water could freeze. Otherwise the drainage from the upper unit may form ice and cause a malfunction of the lower unit.
- When the outdoor temperature is 0 °C or less, do not use the accessory drain pipe and drain cap. If the drain pipe and drain cap are used, the drain water in the pipe may freeze in extremely cold climate. (For reverse cycle model only.)
- In area with heavy snowfall, if the inlet and outlet of the outdoor unit is blocked with snow, it might become difficult to get warm, and it is likely to cause product malfunction. Construct a canopy and a pedestal, or place the unit on a high stand that is locally installed.

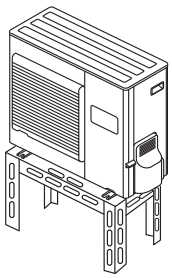

4. Refrigerant circuit

4-1. Models: AOHG24KBTB and AOHG30KBTB

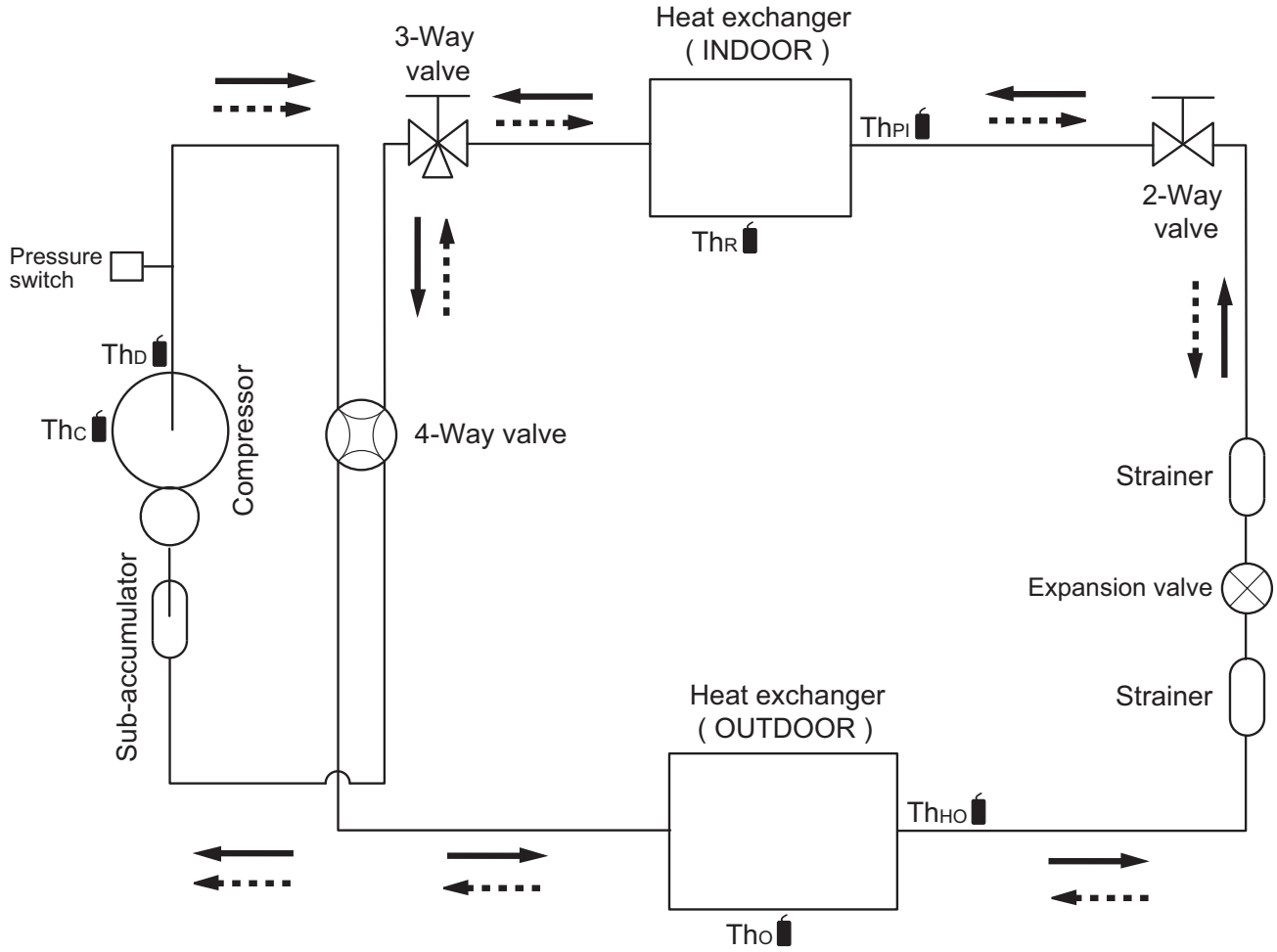

: Cooling
: Heating

ThC : Thermistor (Compressor temperature)
ThD : Thermistor (Discharge temperature)
ThO : Thermistor (Outdoor temperature)
ThHO : Thermistor (Heat Exchanger Out temperature)
ThR : Thermistor (Room temperature)
ThPI : Thermistor (Pipe temperature)

OUTDOOR UNIT
AOHG24-45KBTB

4-2. Models:AOHG36KBTB and AOHG45KBTB

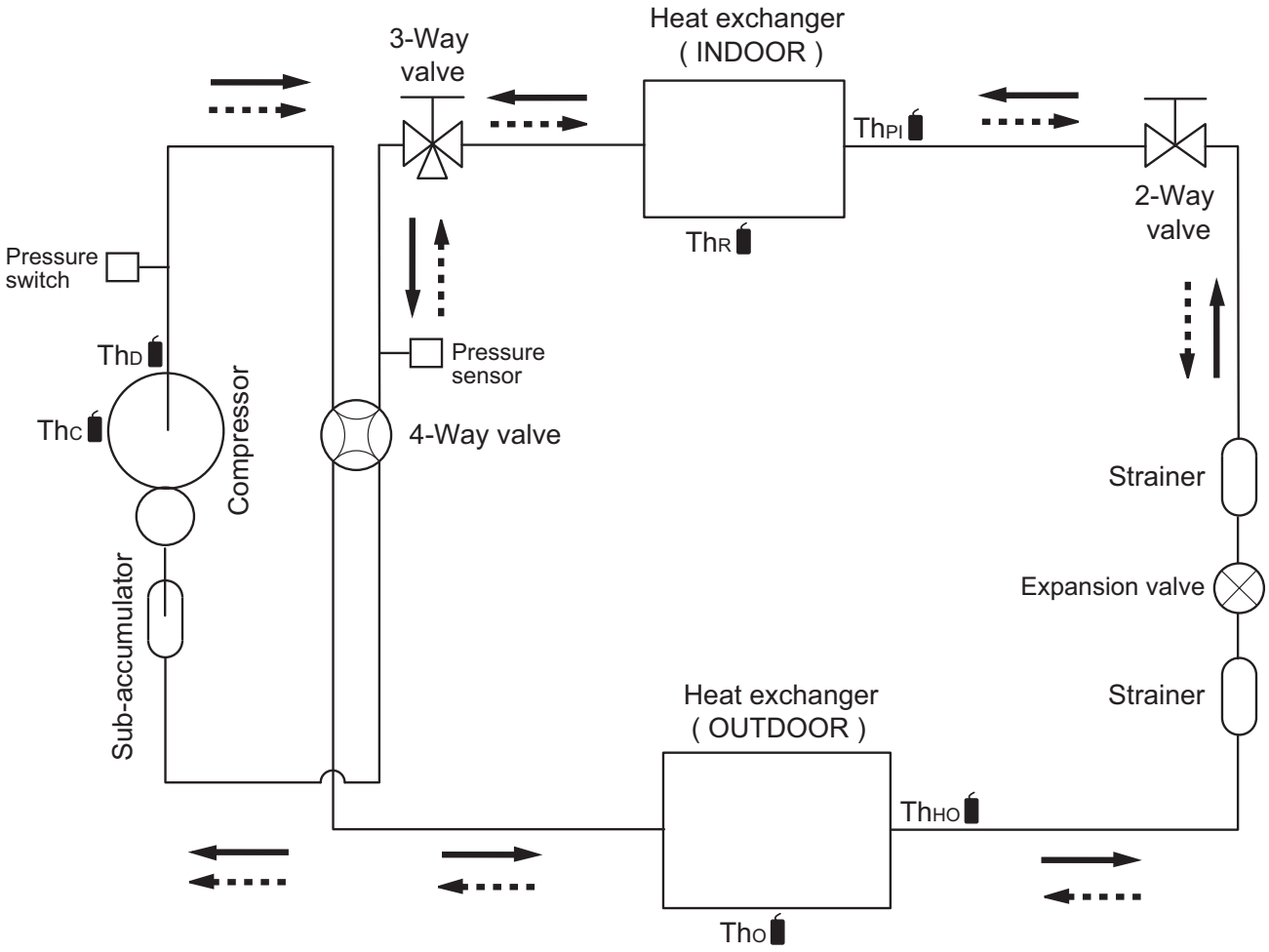

: Cooling
: Heating

ThC : Thermistor (Compressor temperature)
ThD : Thermistor (Discharge temperature)
ThO : Thermistor (Outdoor temperature)
ThHO : Thermistor (Heat Exchanger Out temperature)
ThR : Thermistor (Room temperature)
ThPI : Thermistor (Pipe temperature)

OUTDOOR UNIT
AOHG24-45KBTB

5. Wiring diagrams

5-1. Model: AOHG24KBTB

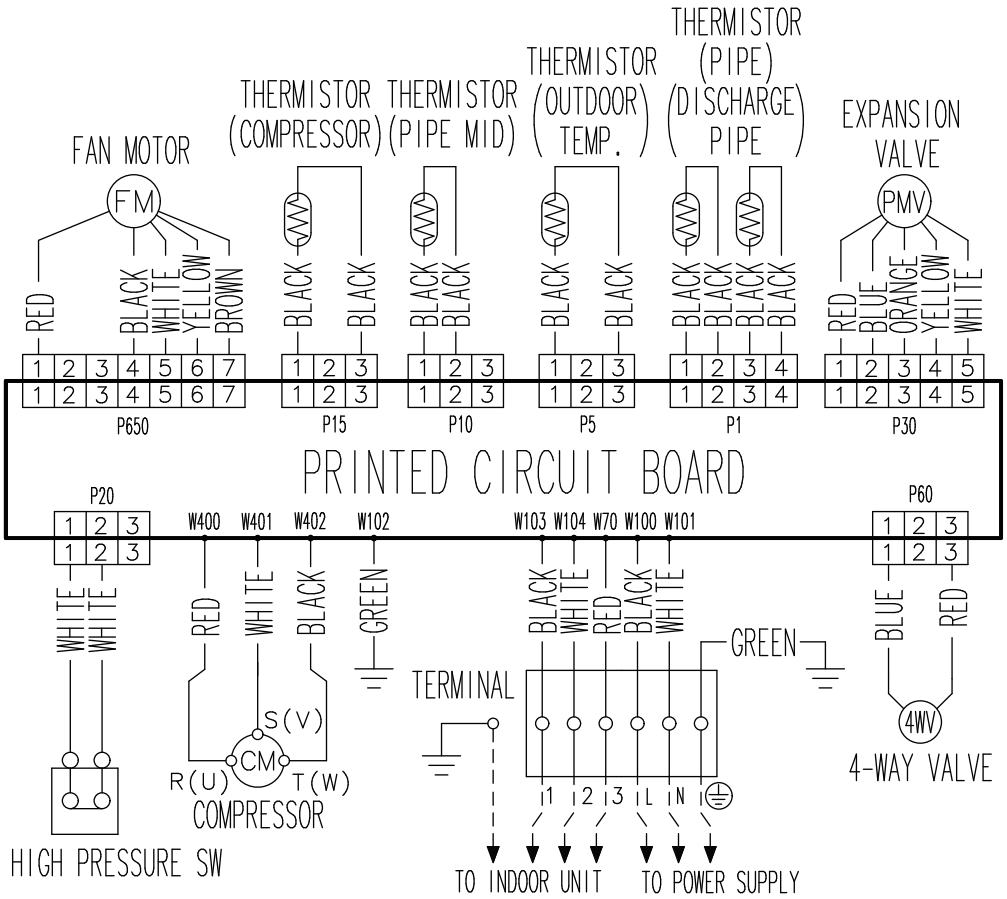

5-2. Model: AOHG30KBTB

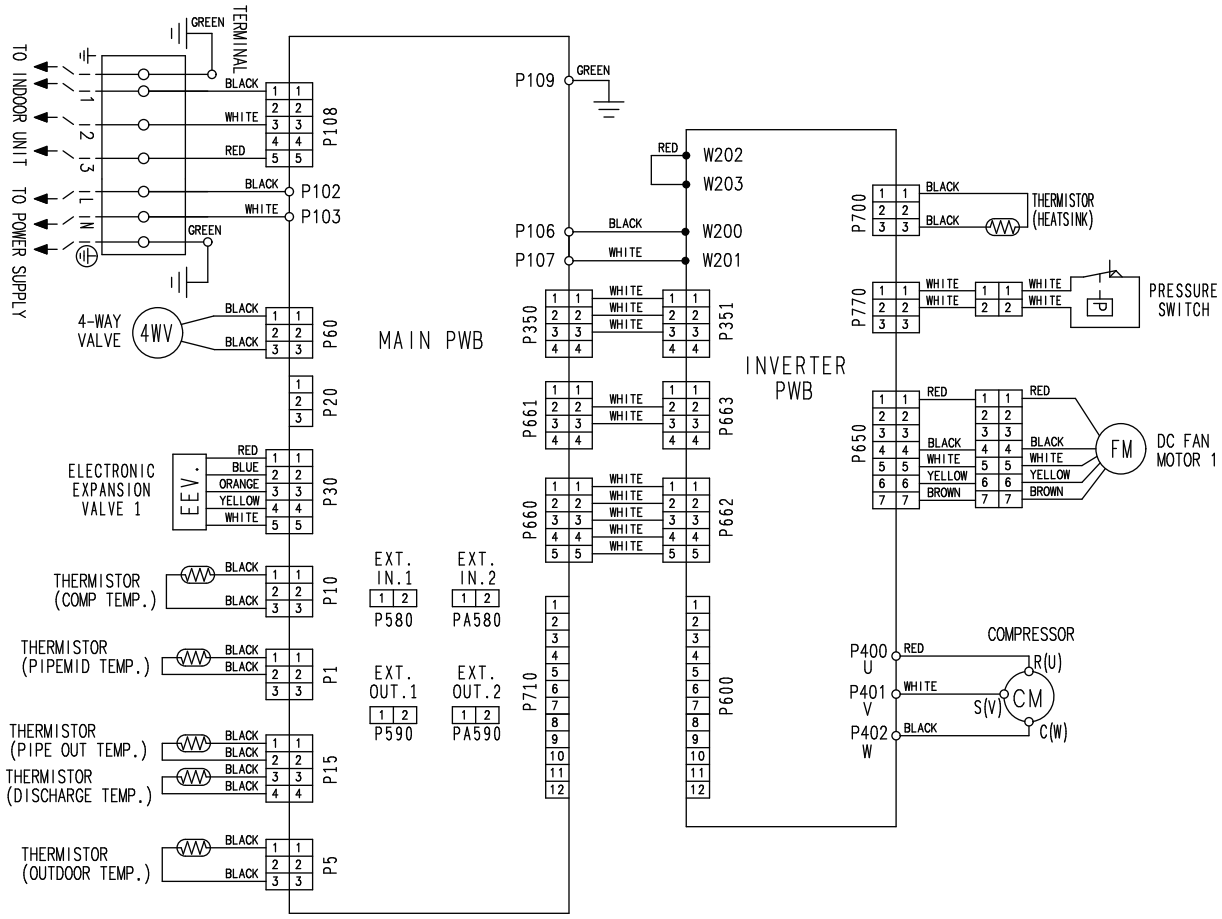

OUTDOOR UNIT
AOHG24-45KBTB

5-3. Model: AOHG36KBTB

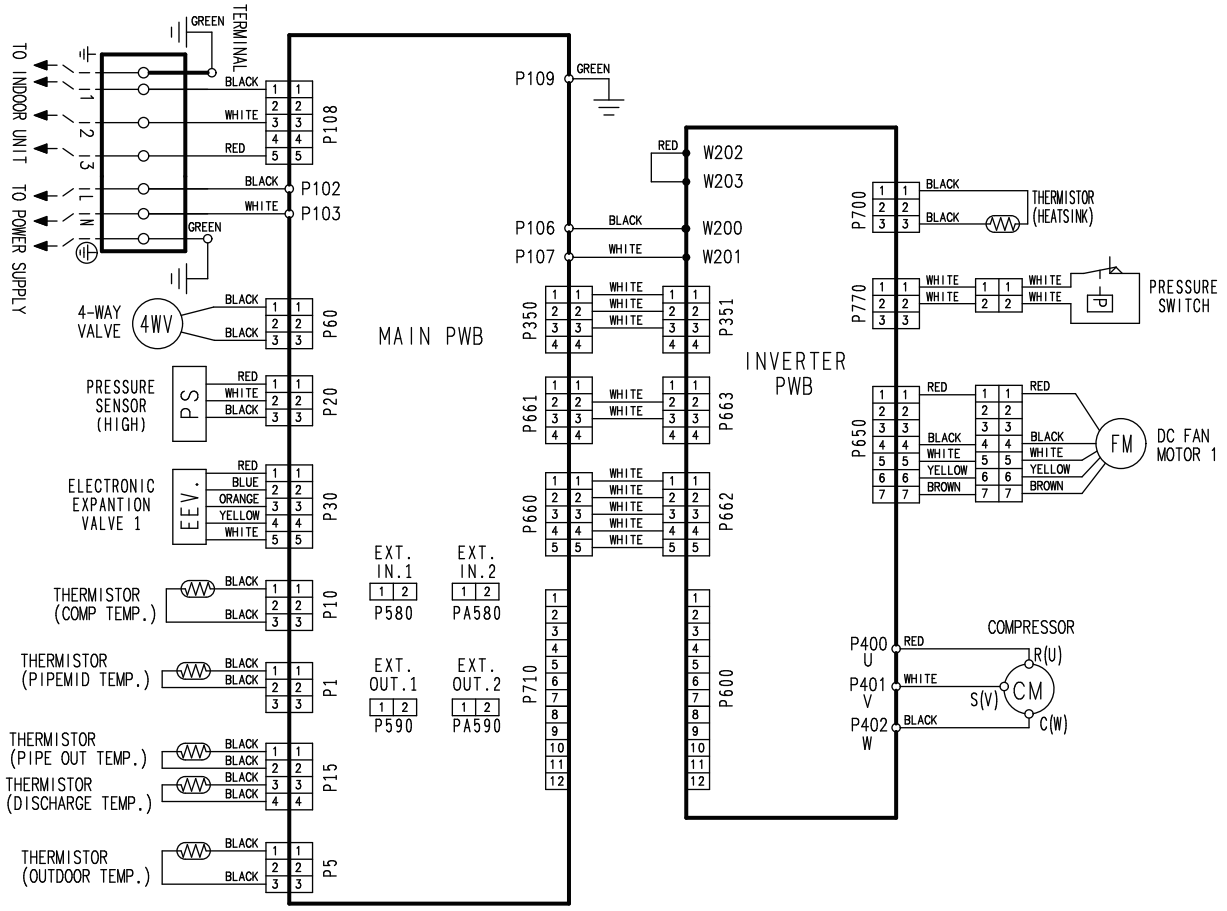

5-4. Model: AOHG45KBTB

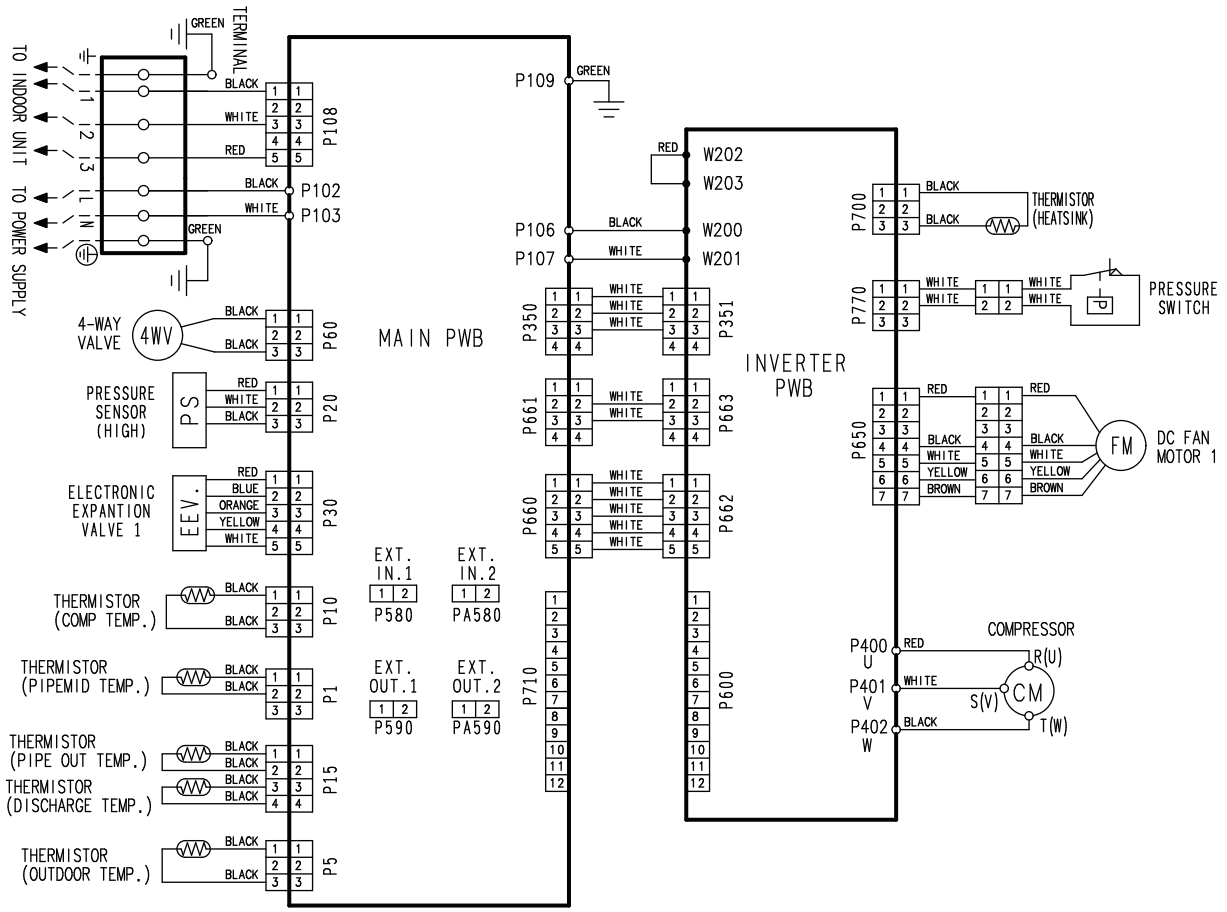

6. Capacity compensation rate for pipe length and height difference

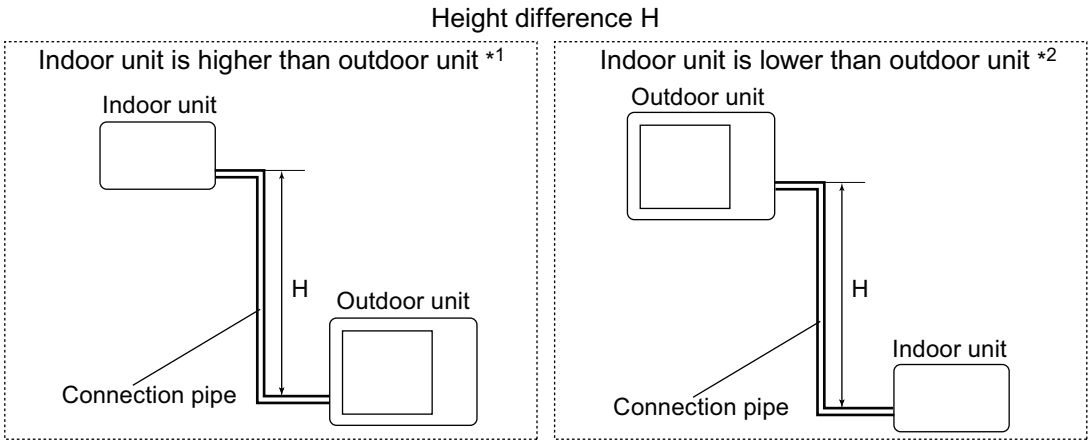

6-1. Model: AOHG24KBTB

NOTE: Values mentioned in the table are calculated based on the maximum capacity.

COOLING			Pipe length (m)						
			5	7.5	10	15	20	25	30
Height difference H (m)	Indoor unit is higher than outdoor unit *1	25	—	—	—	—	—	0.893	0.877
		20	—	—	—	—	0.917	0.900	0.885
		10	—	—	0.966	0.947	0.932	0.914	0.899
		7.5	—	0.979	0.970	0.951	0.936	0.918	0.903
		5	0.992	0.983	0.974	0.955	0.939	0.922	0.906
		0	1.000	0.991	0.981	0.963	0.946	0.930	0.914
	Indoor unit is lower than outdoor unit *2	-5	1.000	0.991	0.981	0.963	0.946	0.930	0.914
		-7.5	—	0.991	0.981	0.963	0.946	0.930	0.914
		-10	—	—	0.981	0.963	0.946	0.930	0.914
		-20	—	—	—	—	0.946	0.930	0.914
		-25	—	—	—	—	—	0.930	0.914

HEATING			Pipe length (m)						
			5	7.5	10	15	20	25	30
Height difference H (m)	Indoor unit is higher than outdoor unit *1	25	—	—	—	—	—	0.871	0.855
		20	—	—	—	—	0.887	0.871	0.855
		10	—	—	0.952	0.903	0.887	0.871	0.855
		7.5	—	0.976	0.952	0.903	0.887	0.871	0.855
		5	1.000	0.976	0.952	0.903	0.887	0.871	0.855
		0	1.000	0.976	0.952	0.903	0.887	0.871	0.855
	Indoor unit is lower than outdoor unit *2	-5	0.995	0.971	0.947	0.899	0.883	0.866	0.850
		-7.5	—	0.969	0.945	0.897	0.881	0.865	0.849
		-10	—	—	0.942	0.894	0.879	0.863	0.847
		-20	—	—	—	—	0.869	0.854	0.838
		-25	—	—	—	—	—	0.850	0.834

6-2. Model: AOHG30KBTB

NOTE: Values mentioned in the table are calculated based on the maximum capacity.

COOLING			Pipe length (m)						
			5	7.5	10	20	30	40	50
Height difference H (m)	Indoor unit is higher than outdoor unit *1	30	—	—	—	—	0.926	0.916	0.906
		20	—	—	—	0.953	0.942	0.931	0.920
		10	—	—	0.979	0.968	0.958	0.946	0.936
		7.5	—	0.988	0.983	0.972	0.961	0.951	0.939
		5	0.992	0.992	0.987	0.976	0.965	0.954	0.943
		0	1.000	1.000	0.995	0.984	0.973	0.962	0.951
	Indoor unit is lower than outdoor unit *2	-5	1.000	1.000	0.995	0.984	0.973	0.962	0.951
		-7.5	—	1.000	0.995	0.984	0.973	0.962	0.951
		-10	—	—	0.995	0.984	0.973	0.962	0.951
		-20	—	—	—	0.984	0.973	0.962	0.951
		-30	—	—	—	—	0.973	0.962	0.951

HEATING			Pipe length (m)						
			5	7.5	10	20	30	40	50
Height difference H (m)	Indoor unit is higher than outdoor unit *1	30	—	—	—	—	0.931	0.914	0.899
		20	—	—	—	0.954	0.931	0.914	0.899
		10	—	—	0.990	0.954	0.931	0.914	0.899
		7.5	—	1.000	0.990	0.954	0.931	0.914	0.899
		5	1.000	1.000	0.990	0.954	0.931	0.914	0.899
		0	1.000	1.000	0.990	0.954	0.931	0.914	0.899
	Indoor unit is lower than outdoor unit *2	-5	0.995	0.995	0.986	0.949	0.926	0.909	0.895
		-7.5	—	0.993	0.983	0.946	0.924	0.907	0.892
		-10	—	—	0.981	0.944	0.921	0.904	0.890
		-20	—	—	—	0.935	0.912	0.895	0.881
		-30	—	—	—	—	0.903	0.886	0.872

6-3. Model: AOHG36KBTB

NOTE: Values mentioned in the table are calculated based on the maximum capacity.

COOLING			Pipe length (m)						
			5	7.5	10	20	30	40	50
Height difference H (m)	Indoor unit is higher than outdoor unit *1	30	—	—	—	—	0.902	0.882	0.862
		20	—	—	—	0.938	0.917	0.897	0.876
		10	—	—	0.973	0.953	0.933	0.912	0.891
		7.5	—	0.988	0.977	0.957	0.936	0.916	0.895
		5	0.992	0.992	0.981	0.961	0.940	0.919	0.898
		0	1.000	1.000	0.989	0.968	0.947	0.926	0.905
	Indoor unit is lower than outdoor unit *2	-5	1.000	1.000	0.989	0.968	0.947	0.926	0.905
		-7.5	—	1.000	0.989	0.968	0.947	0.926	0.905
		-10	—	—	0.989	0.968	0.947	0.926	0.905
		-20	—	—	—	0.968	0.947	0.926	0.905
		-30	—	—	—	—	0.947	0.926	0.905

HEATING			Pipe length (m)						
			5	7.5	10	20	30	40	50
Height difference H (m)	Indoor unit is higher than outdoor unit *1	30	—	—	—	—	0.978	0.968	0.958
		20	—	—	—	0.988	0.978	0.968	0.958
		10	—	—	0.998	0.988	0.978	0.968	0.958
		7.5	—	1.000	0.998	0.988	0.978	0.968	0.958
		5	1.000	1.000	0.998	0.988	0.978	0.968	0.958
		0	1.000	1.000	0.998	0.988	0.978	0.968	0.958
	Indoor unit is lower than outdoor unit *2	-5	0.995	0.995	0.993	0.983	0.973	0.963	0.953
		-7.5	—	0.993	0.991	0.981	0.971	0.961	0.951
		-10	—	—	0.988	0.978	0.968	0.958	0.948
		-20	—	—	—	0.968	0.958	0.949	0.939
		-30	—	—	—	—	0.949	0.939	0.929

6-4. Model: AOHG45KBTB

NOTE: Values mentioned in the table are calculated based on the maximum capacity.

COOLING			Pipe length (m)						
			5	7.5	10	20	30	40	50
Height difference H (m)	Indoor unit is higher than outdoor unit *1	30	—	—	—	—	0.900	0.879	0.858
		20	—	—	—	0.937	0.915	0.894	0.872
		10	—	—	0.973	0.952	0.931	0.908	0.887
		7.5	—	0.988	0.977	0.956	0.934	0.913	0.891
		5	0.992	0.992	0.981	0.960	0.938	0.916	0.894
		0	1.000	1.000	0.989	0.967	0.945	0.923	0.901
	Indoor unit is lower than outdoor unit *2	-5	1.000	1.000	0.989	0.967	0.945	0.923	0.901
		-7.5	—	1.000	0.989	0.967	0.945	0.923	0.901
		-10	—	—	0.989	0.967	0.945	0.923	0.901
		-20	—	—	—	0.967	0.945	0.923	0.901
		-30	—	—	—	—	0.945	0.923	0.901

HEATING			Pipe length (m)						
			5	7.5	10	20	30	40	50
Height difference H (m)	Indoor unit is higher than outdoor unit *1	30	—	—	—	—	0.978	0.968	0.958
		20	—	—	—	0.988	0.978	0.968	0.958
		10	—	—	0.998	0.988	0.978	0.968	0.958
		7.5	—	1.000	0.998	0.988	0.978	0.968	0.958
		5	1.000	1.000	0.998	0.988	0.978	0.968	0.958
		0	1.000	1.000	0.998	0.988	0.978	0.968	0.958
	Indoor unit is lower than outdoor unit *2	-5	0.995	0.995	0.993	0.983	0.973	0.963	0.953
		-7.5	—	0.993	0.991	0.981	0.971	0.961	0.951
		-10	—	—	0.988	0.978	0.968	0.958	0.948
		-20	—	—	—	0.968	0.958	0.949	0.939
		-30	—	—	—	—	0.949	0.939	0.929

OUTDOOR UNIT
AOHG24-45KBTB

7. Additional charge calculation

7-1. Model: AOHG24KBTB

Refrigerant type		R32
Refrigerant amount	g	1,250

■ Refrigerant charge

Total pipe length	m	20 or less	25	30 (Max.)	20 g/m
Additional charge amount	g	0	100	200	

7-2. Models: AOHG30KBTB and AOHG36KBTB

Refrigerant type		R32
Refrigerant amount	g	1,900

■ Refrigerant charge

Total pipe length	m	30 or less	40	50 (Max.)	40 g/m
Additional charge amount	g	0	400	800	

7-3. Model: AOHG45KBTB

Refrigerant type		R32
Refrigerant amount	g	2,700

■ Refrigerant charge

Total pipe length	m	30 or less	40	50 (Max.)	40 g/m
Additional charge amount	g	0	400	800	

OUTDOOR UNIT
AOHG24-45KBTB

8. Airflow

8-1. Model: AOHG24KBTB

● Cooling

m^3/h	2,700
l/s	750
CFM	1,589

● Heating

m^3/h	2,700
l/s	750
CFM	1,589

8-2. Models: AOHG30KBTB and AOHG36KBTB

● Cooling

m^3/h	3,750
l/s	1,042
CFM	2,207

● Heating

m^3/h	3,750
l/s	1,042
CFM	2,207

8-3. Model: AOHG45KBTB

● Cooling

m^3/h	4,450
l/s	1,236
CFM	2,619

● Heating

m^3/h	4,450
l/s	1,236
CFM	2,619

OUTDOOR UNIT
AOHG24-45KBTB

9. Operation noise (sound pressure)

9-1. Noise level curve

■ Model: AOHG24KBTB

● Cooling

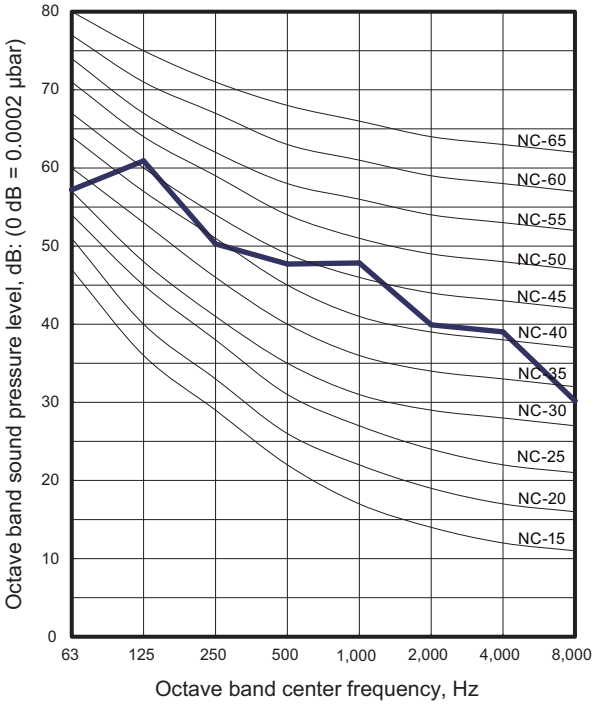

● Heating

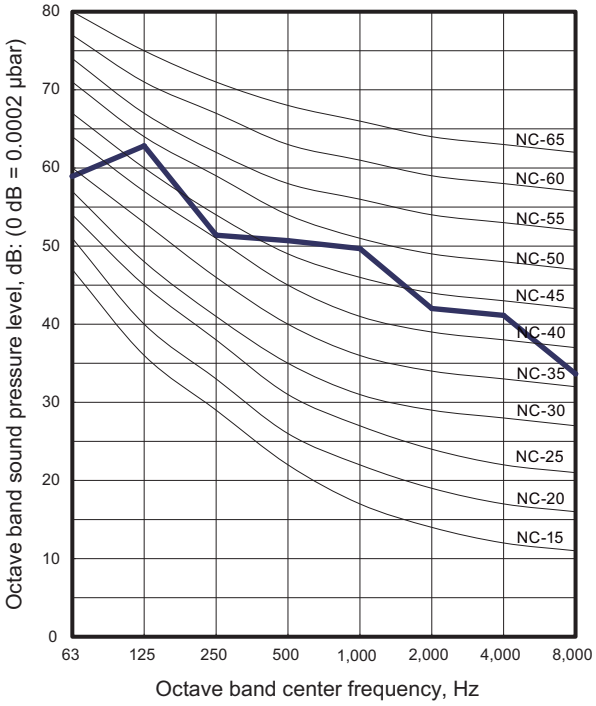

■ Model: AOHG30KBTB

● Cooling

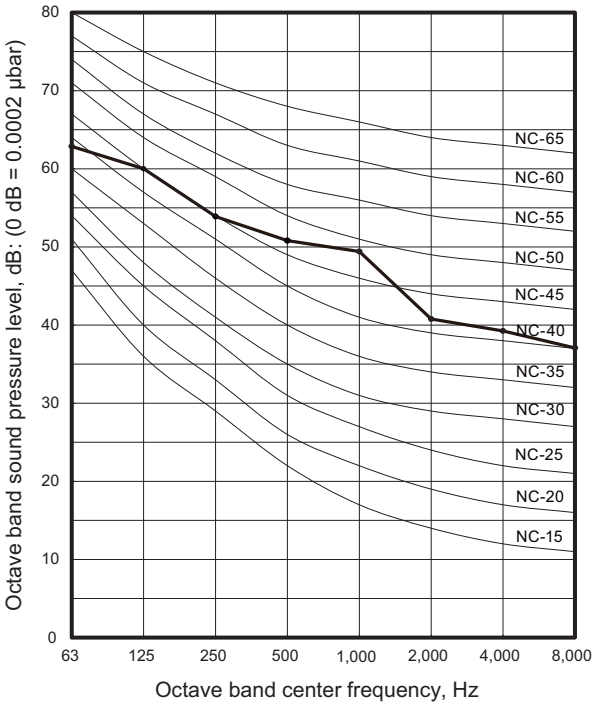

● Heating

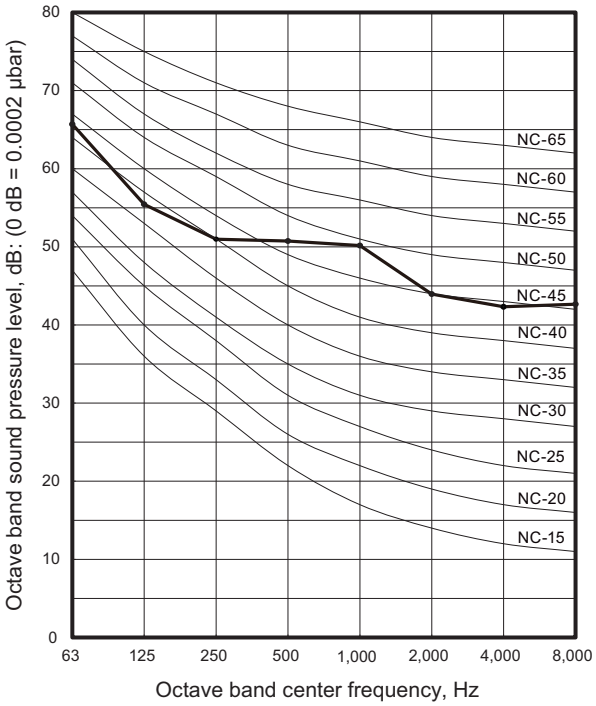

OUTDOOR UNIT
AOHG24-45KBTB

■ Model: AOHG36KBTB

● Cooling

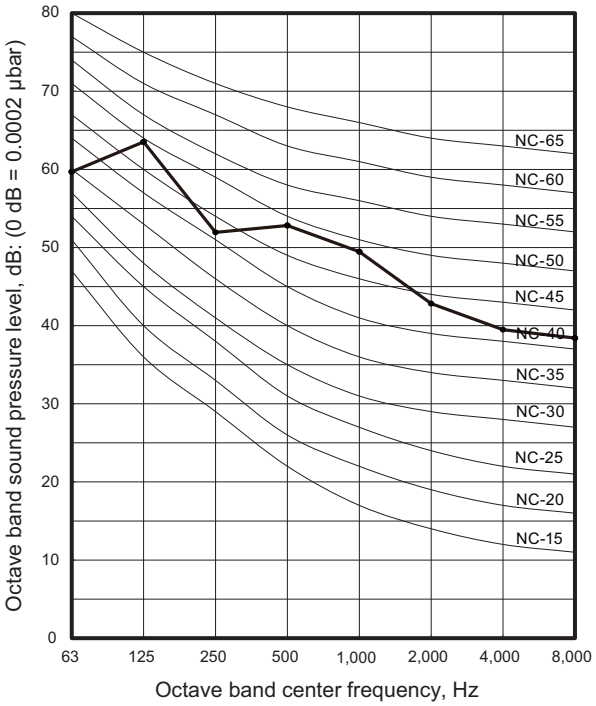

● Heating

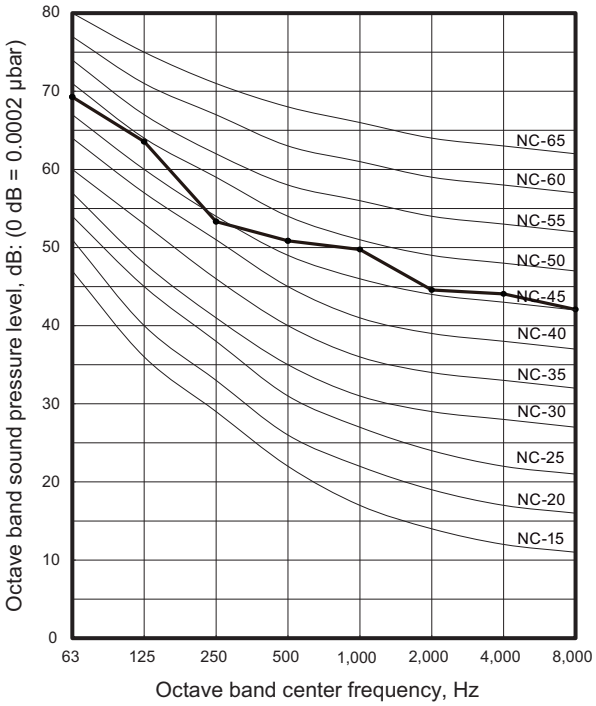

■ Model: AOHG45KBTB

● Cooling

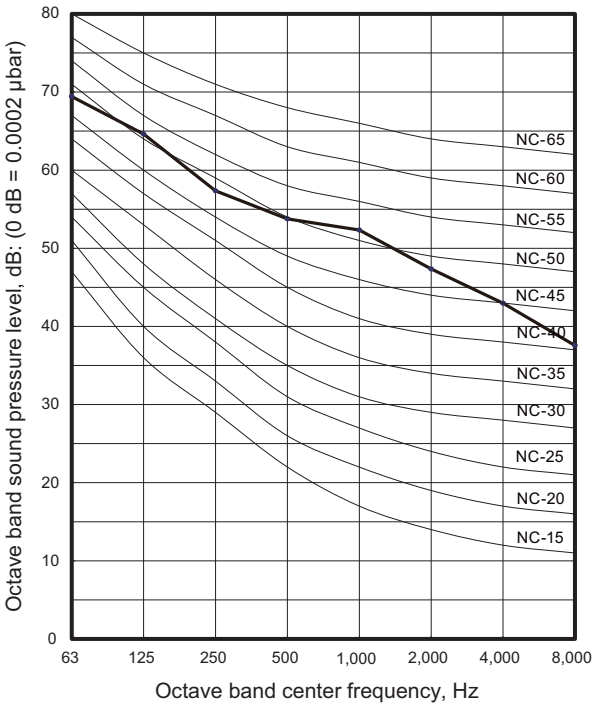

● Heating

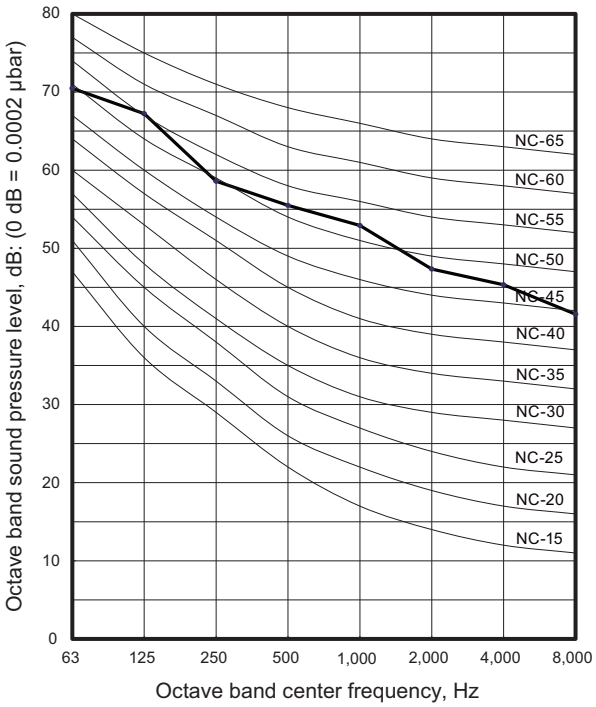

9-2. Sound level check point

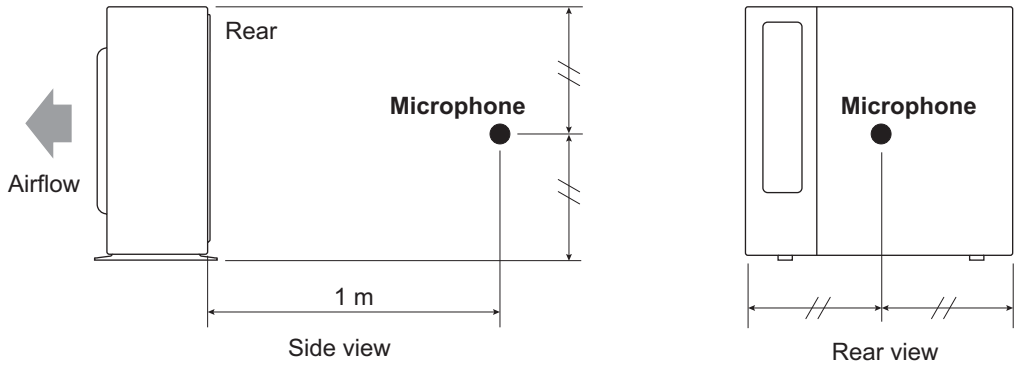

NOTE: Detailed shape of the actual outdoor unit might be slightly different from the one illustrated above.

OUTDOOR UNIT
AOHG24-45KBTB

10. Electrical characteristics

Model name				AOHG24KBTB
Power supply	Voltage		V	230 ~
	Frequency		Hz	50
Max operating current *1			A	13.6
Starting current			A	9.4
Wiring spec. *2	Circuit breaker current		A	20
	Power cable		mm^2	2.5
	Connection cable *3	Cross-sectional area	mm^2	1.5
		Limited wiring length	m	31

Model name				AOHG30KBTB	AOHG36KBTB
Power supply	Voltage		V	230 ~	
	Frequency		Hz	50	
Max operating current *1			A	22.6	
Starting current			A	11.7	13.1
Wiring spec. *2	Circuit breaker current		A	25	
	Power cable		mm^2	4.0	
	Connection cable *3	Cross-sectional area	mm^2	1.5	
		Limited wiring length	m	51	

Model name				AOHG45KBTB
Power supply	Voltage		V	230 ~
	Frequency		Hz	50
Max operating current *1			A	28.5
Starting current			A	18.6
Wiring spec. *2	Circuit breaker current		A	32
	Power cable		mm^2	4.0
	Connection cable *3	Cross-sectional area	mm^2	1.5
		Limited wiring length	m	51

*1: Maximum current is the total current of the indoor unit and the outdoor unit.

*2: Selected sample based on Japan Electrotechnical Standards and Codes Committee E0005. As the regulations of wire size and circuit breaker differ in each country or region, select appropriate devices complied to the regional standard.

*3: Limit voltage drop to less than 2%. Increase conductor size if voltage drop is 2% or more.

OUTDOOR UNIT
AOHG24-45KBTB

11. Safety devices

Type of protection	Protection form		Model
			AOHG24KBTB
Circuit protection	Current fuse (Main PCB)		250 V, 25 A 250 V, 5 A 250 V, 3.15 A
Fan motor protection	Thermal protection program	Activate	125 ±10 °C Fan motor stop
		Reset	120 ±10°C Fan motor restart
Compressor protection	Thermal protection program (Discharge temp.)	Activate	110 °C Compressor stop
		Reset	After 7 minutes Compressor restart
	Thermal protection program (Compressor temp.)	Activate	108 °C Compressor stop
		Reset	80 °C or less Compressor restart
	Thermal protection program (Outdoor temp.) (Only in COOL or DRY mode)	Activate	-20 °C Compressor stop
		Reset	-15 °C Compressor restart

Type of protection	Protection form		Model
			AOHG30KBTB AOHG36KBTB
Circuit protection	Current fuse (Main PCB)		250 V, 30 A 250 V, 3.15 A 250 V, 10 A × 2
Fan motor protection	Thermal protection program	Activate	122 ±8 °C Fan motor stop
		Reset	116 ±9°C Fan motor restart
Compressor protection	Thermal protection program (Discharge temp.)	Activate	110 °C Compressor stop
		Reset	After 7 minutes Compressor restart
	Thermal protection program (Compressor temp.)	Activate	108 °C Compressor stop
		Reset	80 °C or less Compressor restart
	Thermal protection program (Outdoor temp.) (Only in COOL or DRY mode)	Activate	-20 °C Compressor stop
		Reset	-15 °C Compressor restart

OUTDOOR UNIT
AOHG24-45KBTB

Type of protection	Protection form		Model
			AOHG45KBTB
Circuit protection	Current fuse (Main PCB)		250 V, 30 A or 35.5 A 250 V, 3.15 A 250 V, 10 A × 2
Fan motor protection	Thermal protection program	Activate	150 ±15 °C Fan motor stop
		Reset	120 ±15°C Fan motor restart
Compressor protection	Thermal protection program (Discharge temp.)	Activate	110 °C Compressor stop
		Reset	After 7 minutes Compressor restart
	Thermal protection program (Compressor temp.)	Activate	108 °C Compressor stop
		Reset	80 °C or less Compressor restart
	Thermal protection program (Outdoor temp.) (Only in COOL or DRY mode)	Activate	-20 °C Compressor stop
		Reset	-15 °C Compressor restart

OUTDOOR UNIT
AOHG24-45KBTB

12. External input and output (30-45 models)

With using external input and output functions, this product can be operated inter-connectedly with an external device.

Connector	Input	Output	Remarks
P580	Low noise mode	—	See external input/output settings for details.
PA580	Peak cut mode	—	
P590	—	Error status	
PA590	—	Compressor status	

12-1. External input

With using external input function, on/off status of “Low noise mode” and “Peak cut mode” can be specified by the external signal.

■ Low noise mode

In following condition, the operating noise of the outdoor unit reduces comparing from the one in normal operating condition:

The air conditioner is set to the “Low noise mode” when closing the contact input of a commercial timer or on/off switch to a connector on the control PCB of the outdoor unit.

NOTE: Product performance may drop depending on some conditions such as the outdoor temperature.

- **Circuit diagram example**

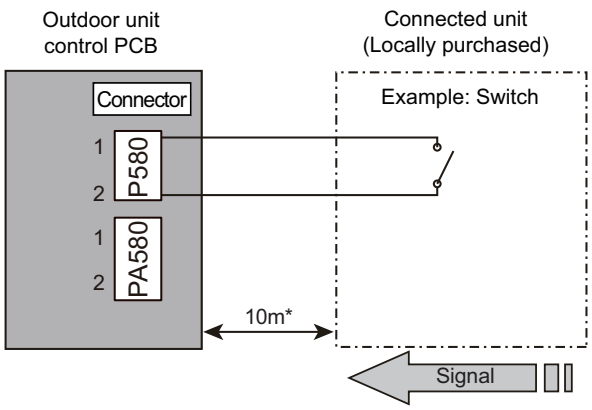

- Contact capacity: DC 24 V or more, 10 mA or more.
- *: Make the distance from the PCB to the connected unit within 10 m.
- Construct a circuit as shown in this figure with using optional parts mentioned below.
- Input signal: On in “Low noise mode”
- Input signal: Off in normal operation
- To set the level of “Low noise mode”, refer to "Low noise mode" on page 103.

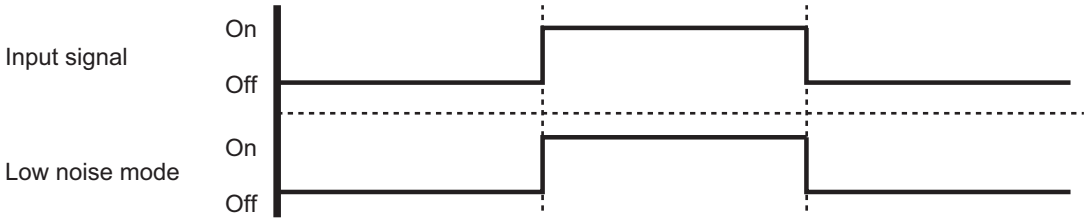

- **Optional part**

Part name	Model name	Exterior
External connect kit	UTY-XWZXZ3	External input wire 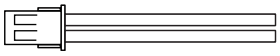

OUTDOOR UNIT
AOHG24-45KBTB

■ Peak cut mode

By performing following on-site work, operation that suppresses the current value can be enabled:
The air conditioner is set to the “Peak cut mode” when closing the contact input of a commercial timer or on/off switch to a connector on the control PCB of the outdoor unit.

- **Circuit diagram example**

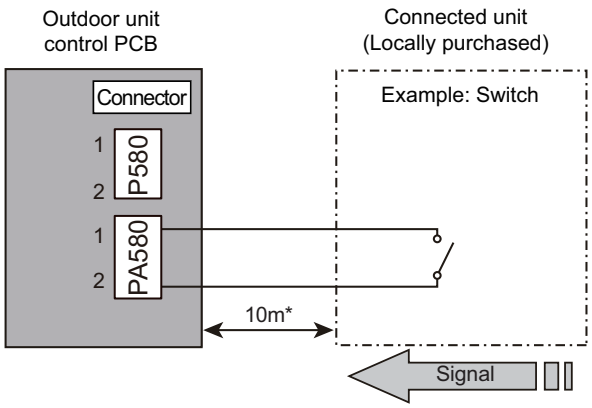

- Contact capacity: DC 24 V or more, 10 mA or more.
- *: Make the distance from the PCB to the connected unit within 10 m.
- Construct a circuit as shown in this figure with using optional parts mentioned below.
- Input signal: On in “Peak cut mode”
- Input signal: Off in normal operation
- To set the level of “Peak cut mode”, refer to "Peak cut mode" on page 104.

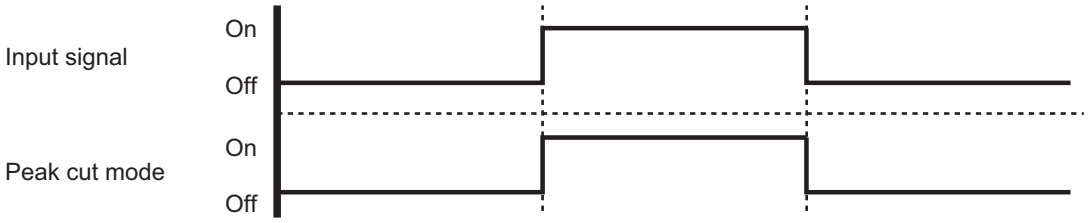

- **Optional part**

Part name	Model name	Exterior
External connect kit	UTY-XWZXZ3	External input wire 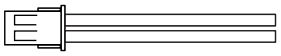

OUTDOOR UNIT
AOHG24-45KBTB

12-2. External output

With using external output function, some status signals are transmitted to the control PCB, and the related LED lamp indicates the status of this product.

■ Error status output

Signal on air conditioner error status is generated when a malfunction occurs.

- **Circuit diagram example**

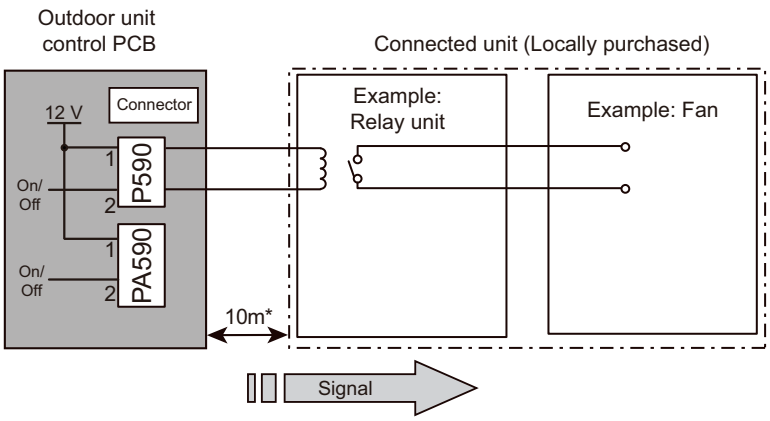

- Output voltage (Vcc): DC 12 V 50 mA or less
- *: Make the distance from the PCB to the connected unit within 10 m.

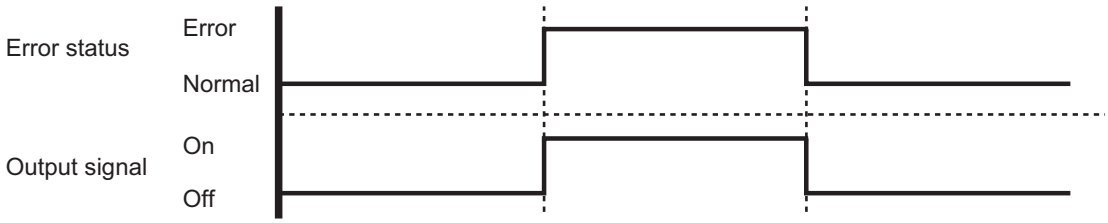

- **Optional part**

Part name	Model name	Exterior
External connect kit	UTY-XWZXZ3	External output wire 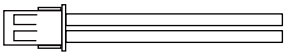

OUTDOOR UNIT
AOHG24-45KBTB

■ Compressor status output

Signal on compressor operation status is generated when the compressor is running.

- **Circuit diagram example**

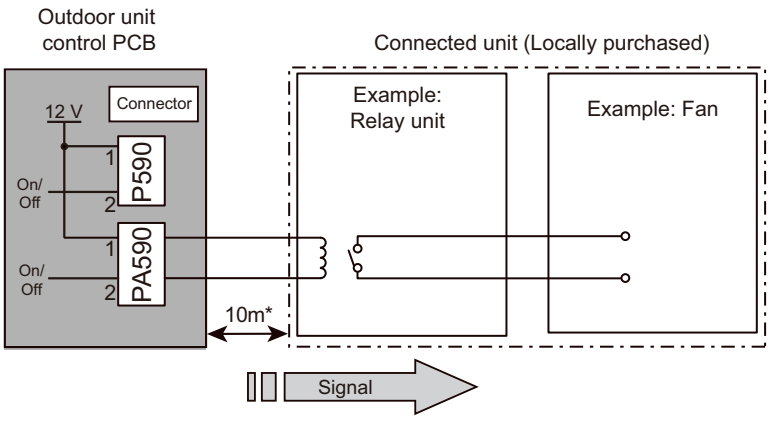

- Output voltage (Vcc): DC 12 V 50 mA or less
- *: Make the distance from the PCB to the connected unit within 10 m.

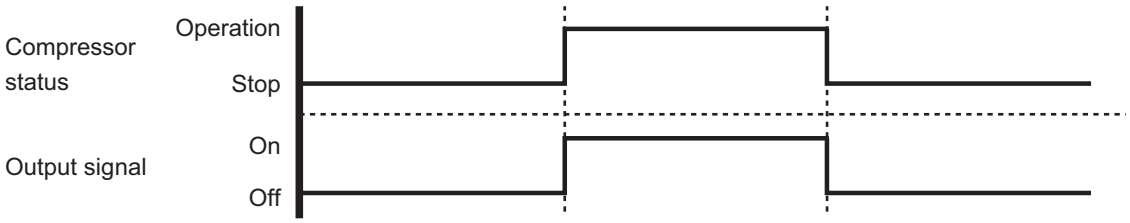

- **Optional part**

Part name	Model name	Exterior
External connect kit	UTY-XWZXZ3	External output wire 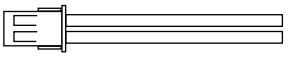

OUTDOOR UNIT
AOHG24-45KBTB

13. Function settings (30-45 models)

Perform appropriate function setting locally according to the installation environment.

NOTE: Incorrect settings can cause a product malfunction.

⚠ CAUTION

- Before setting up the switch buttons, discharge the static electricity from your body.
- Never touch the terminals or the patterns on the parts that are mounted on the PCB.

13-1. Control PCB and switch buttons location

Control PCB of the outdoor unit is located as shown in the following figure.

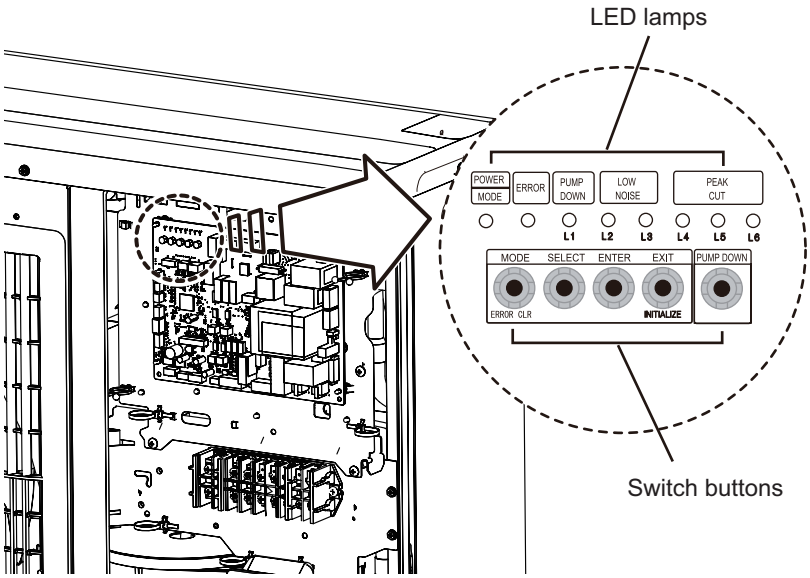

OUTDOOR UNIT
AOHG24-45KBTB

■ Switch buttons and the functions

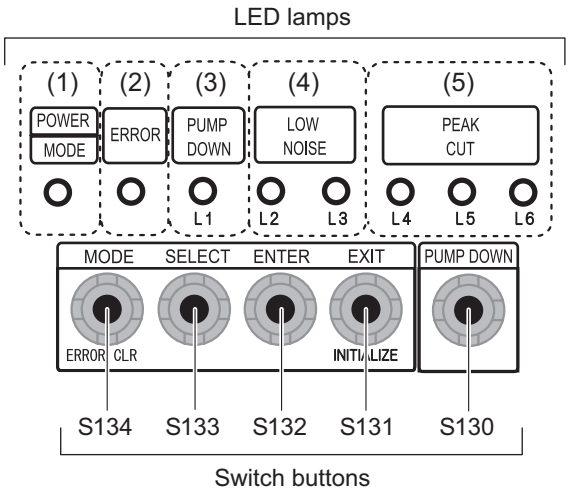

LED lamp			Function or operation method
(1)	POWER/MODE	Green	Lights on while power on. Local setting in outdoor unit or error code is displayed with blink.
(2)	ERROR	Red	Blinks during error operation.
(3)	PUMP DOWN (L1)	Orange	Lights on during pump down operation.
(4)	LOW NOISE MODE (L2 and L3)	Orange	Lights on during “Low noise mode” when local setting is activated. (Lighting pattern of L2 and L3 indicates low noise level.)
(5)	PEAK CUT MODE (L4, L5, and L6)	Orange	Lights on during “Peak cut mode” when local setting is activated. (Lighting pattern of L4, L5, and L6 indicates peak cut level.)

Switch button		Function or operation method
S134	MODE	Switches between “Local setting” and “Error code display”.
S133	SELECT	Switches between the individual “Local settings” and the “Error code displays”.
S132	ENTER	Switches between the individual “Local settings” and the “Error code displays”.
S131	EXIT	Returns to “Operation status display”.
S130	PUMP DOWN	Starts the pump down operation.

OUTDOOR UNIT AOHG24-45KBTB

13-2. Local setting procedure

NOTE: Before performing the function setting, be sure to stop the operation of the air conditioner.

■ Low noise mode

1. Press the MODE switch button (S134) for 3 seconds or more to switch to “Local setting mode”.
2. After confirming the LED lamp of POWER/MODE blinks 9 times, press the ENTER switch button (S132).

POWER / MODE	ERROR	PUMP DOWN (L1)	LOW NOISE (L2)	LOW NOISE (L3)	PEAK CUT (L4)	PEAK CUT (L5)	PEAK CUT (L6)
Blinks (9 times)	○	○	○	○	○	○	○

Sign “ ○ ”: Lights off

3. Press the SELECT switch button (S133), and adjust the LED lamp as shown below. Then the LED lamp indicates the current setting.

	LOW NOISE (L2)	LOW NOISE (L3)
LOW NOISE MODE	○	Blink

4. Press the ENTER switch button (S132).

	LOW NOISE (L2)	LOW NOISE (L3)
LOW NOISE MOD E	○	●

Sign “ ● ”: Lights on

5. Press the SELECT switch button (S133), and adjust the LED lamps as shown below.

	PEAK CUT (L4)	PEAK CUT (L5)	PEAK CUT (L6)
MODE 1: Low	○	○	Blink
MODE 2: Lower	○	Blink	○

6. Press the ENTER switch button (S132) and fix it.

	PEAK CUT (L4)	PEAK CUT (L5)	PEAK CUT (L6)
MODE 1: Low	○	○	●
MODE 2: Lower	○	●	○

7. To return to “Operating status display (Normal operation)”, press the EXIT switch button (S131).

In case of missing how many times you pressed the SELECT and ENTER switch buttons:

1. To return to “Operation status display (Normal operation)”, press the EXIT switch button once.
2. Restart from the beginning of setting procedure.

NOTE: In case of missing how many times you pressed the SELECT and ENTER switch buttons, you must redo the setting procedure. Return to “Operation status display (Normal operation)” by pressing the EXIT switch button once, and restart from the beginning of the setting procedure.

OUTDOOR UNIT AOHG24-45KBTB

■ Peak cut mode

1. Press the MODE switch button (S134) for 3 seconds or more to switch to “Local setting mode”.
2. After confirming the LED lamp of POWER/MODE blinks 9 times, press the ENTER switch button (S132).

POWER / MODE	ERROR	PUMP DOWN (L1)	LOW NOISE (L2)	LOW NOISE (L3)	PEAK CUT (L4)	PEAK CUT (L5)	PEAK CUT (L6)
Blinks (9 times)	○	○	○	○	○	○	○

Sign “ ○ ”: Lights off

3. Press the SELECT switch button (S133), and adjust the LED lamp as shown below. Then the LED lamp indicates the current setting.

	LOW NOISE (L2)	LOW NOISE (L3)
PEAK CUT MOD E	Blink	○

4. Press the ENTER switch button (S132).

	LOW NOISE (L2)	LOW NOISE (L3)
PEAK CUT MODE	●	○

Sign “ ● ”: Lights on

5. Press the SELECT switch button (S133), and adjust the LED lamps as shown below.

	PEAK CUT (L4)	PEAK CUT (L5)	PEAK CUT (L6)
100 % of rated input ratio	○	○	Blink
75 % of rated input ratio	○	Blink	○
50 % of rated input ratio	○	Blink	Blink
0 % of rated input ratio	Blink	○	○

6. Press the ENTER switch button (S132) and fix it.

	PEAK CUT (L4)	PEAK CUT (L5)	PEAK CUT (L6)
100 % of rated input ratio	○	○	●
75 % of rated input ratio	○	●	○
50 % of rated input ratio	○	●	●
0 % of rated input ratio	●	○	○

7. To return to “Operating status display (Normal operation)”, press the EXIT switch button (S131).

NOTE: When pressed number is lost during setting, you must redo the setting procedure. Return to “Operation status display (Normal operation)” by pressing the EXIT switch button once, and restart from the beginning of the setting procedure.

14. Accessories

14-1. Model: AOHG24KBTB

Part name	Exterior	Q'ty	Part name	Exterior	Q'ty
Installation manual		1	Drain pipe		1

OUTDOOR UNIT
AOHG24-45KBTB

14-2. Models: AOHG30KBTB, AOHG36KBTB, and AOHG45KBTB

Part name	Exterior	Q'ty	Part name	Exterior	Q'ty
Installation manual		1	Drain cap		3
Drain pipe		1	One-touch bush		2

15. Optional parts

Exterior	Part name	Model name	Summary
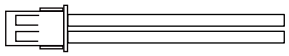	External connect kit	UTY-XWZXZ3	Use to operate the external input and output functions of outdoor unit. (For 30-45 models)

OUTDOOR UNIT
AOHG24-45KBTB